BEST

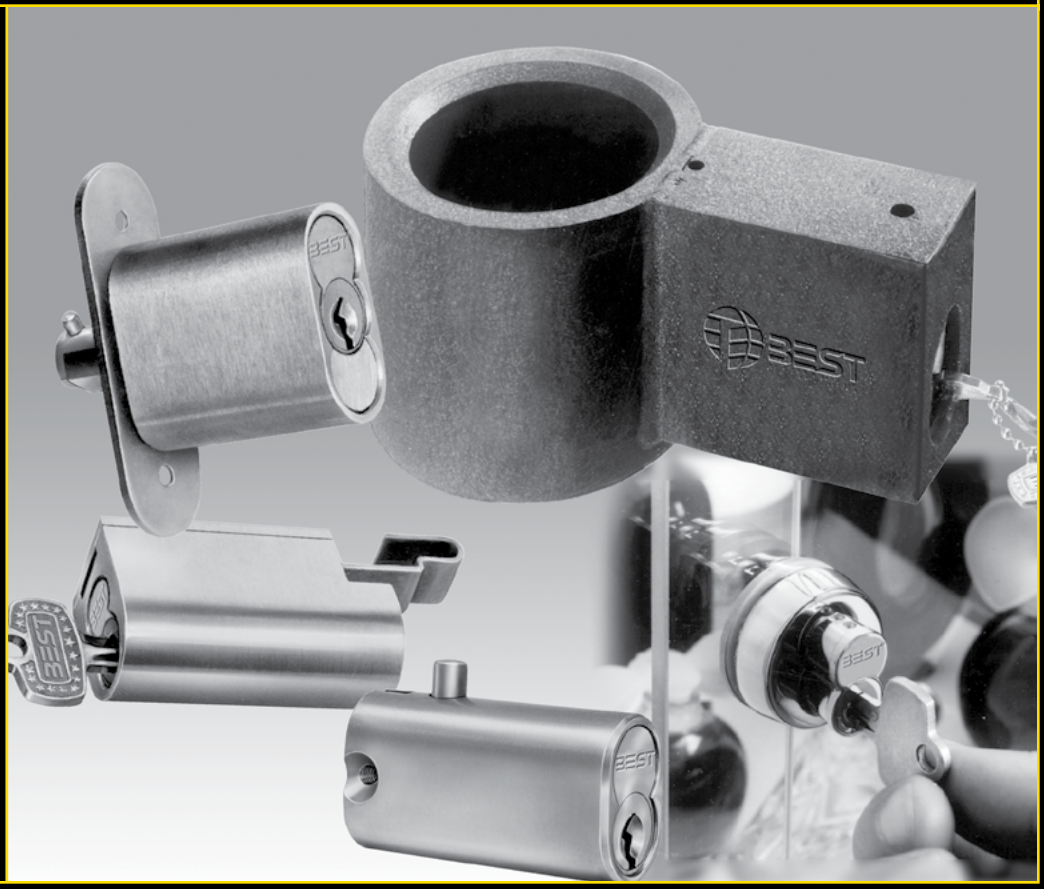

MISCELLANEOUS

STANLEY®
Security Solutions

TABLE OF CONTENTS

	Page		Page
C Series – Cores	2	2S Series – Sliding Door Lock	4
Patented Keying System	2	3S Series – Sliding Panel Lock	5
2J Series – Semi-Trailer King Pin	3	4S Series – Sliding Door Cylinder	5
2P Series – Push Lock	4	KRD Series – Key Retaining Devices	6, 7

TÜV USA Member of TÜV NORD Group

ANSI American National Standards Institute

BHMA CERTIFIED Be Safe. Be Secure. Be Certified.

The C Series is ANSI BHMA A156.5 certified

C SERIES — CORES & SPECIAL APPLICATION CORES

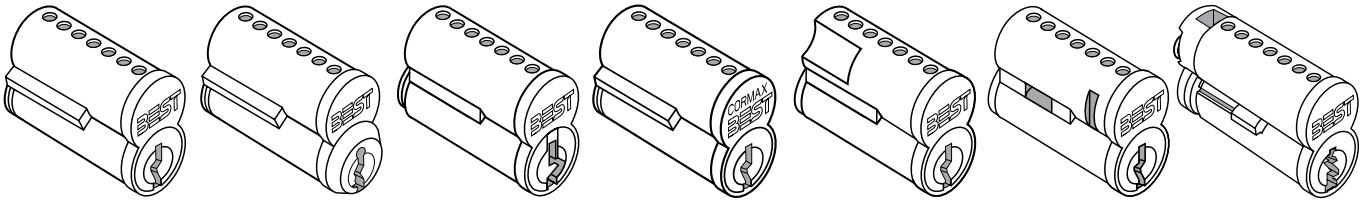

1C core (standard) | **1CK core** | **1CP core (premium)** | **1CM/X core (cormax)** | **3C core (8E European)** | **5C core (High security mortise)** | **6C core (4S display case)**

HOW TO ORDER: C SERIES

1C	7	A	1		606
Core Type	**Core Size**	**Keyway Code**	**Combination Code**	**Options**	**Finish**
1C– standard **1CK**– patented **1CP**– premium **1CM**– Cormax-M series **1CX**– Cormax-X series **3C**– for 8E cylinder **5C****– high security **6C**– for 4S cylinder	**5**– 5 pin (1C only) **6**– 6 pin (1C, 1CK only) **7**– 7 pin	Designate specific keyway (A, E, etc.)	**1**– uncombinated **2**– combinated	**B***– pick & drill resistant (1C only) **K***– key trap **T***– deadlocking (6C only)	605 606 612 613 625 626

*Extra cost option.

**Long blade key required. If combinated, you must specify keymark and number of keys.

CORMAX™ PATENTED KEYING SYSTEM

BEST® CORMAX™ is the premier patented keying system offered by Stanley Security Solutions. CORMAX will meet your needs for security, key control, and convenience. A simple solution with no compromising allowed.

CORMAX™ Patented Keying System

CORMAX is the upgrade path for existing BEST Standard, Premium, and MX8 customers; and it is an essential element of non-residential access control as security administrators strive to eliminate the unauthorized duplication of keys.

CORMAX offers the following features and benefits:

- A long-term US utility patent that guarantees the extended useful life of the system through 2027.
- A second, independent locking mechanism that utilizes a patented set of built-in side pins to provide higher security.
- Several levels of geographical exclusivity, including national exclusivity, are available via the patented side pin feature.
- CORMAX cores and keys are available exclusively through Stanley sales offices. Key blanks are only sold to individuals authorized by the customer to ensure key blanks do not end up in the possession of unauthorized personnel either inside or outside the customer's facility.
- CORMAX cores are certified to meet the security, safety, and reliability requirements of BHMA A156.5 Grade 1.
- Picking and drilling resistance options are available if higher levels of security are desired.
- Complete factory masterkeying service offered, and at no charge with purchase of BEST locksets and PHI exit devices.
- Keyways are organized in families of four keyways each, with double-milled and quad-milled key levels to facilitate the design of masterkey systems in multi-building campuses.
- BEST CORMAX cores are compatible with all existing BEST interchangeable core housings, eliminating the need for new or modified locksets.

J SERIES
SEMI-TRAILER KINGPIN LOCK

2J7L11
Single latch armored kingpin lock operated by single key.

2J7L21
Double latch armored kingpin lock requires two separate authorized keys to open.

Operation
The semi-trailer lock, locks onto the kingpin on a dropped semi-trailer to prevent hookup. The lock is automatically secured when pushed onto the kingpin and the key(s) can be withdrawn only in the locked position. Bright red finish signals driver not to back into lock. The deadlocking bolt functions listed below (D11, D21) feature a deadlocking bolt controlled by key to prevent bolt(s) from being shimmed or jimmied. A key is necessary both to secure and remove deadlocking bolt models.

Specifications
Case– Structural steel, machined solid steel head(s) heliarc welded to center body.
Single head 8" x 8 ¾" x 4", weight approx. 15 lbs. Double head 11 ½" x 3 ¾" x 4". Weight approx. 19 lbs.
Latch projection– 15/32"
Cylinder(s)– Brass with interchangeable core
Finish– Case, bright red crinkle finish; cylinders and cores 606
Armored front protection– Standard. Cylinder and core protected with hardened steel plate. Requires long blade key.
Optional extended block (without armor package) to protect cylinder.

Warning Flag Assembly
Includes eyebolt, snap, chains and danger flag.
Hole in housing predrilled for attachment.
Specify 2JOF1

2JOF1
with flag

Semi-Trailer Kingpin Storage Rack
Mounts on wall. Holds 3 or 5 kingpin locks. Requires key to remove locks. Black finish standard. Plated corrosion-resistant finish available.
Three-post mount **2JOR3** (**2JOR3C**-plated).
Five-post mount **2JOR5** (**2JOR5C**-plated).
Specify finish with order.

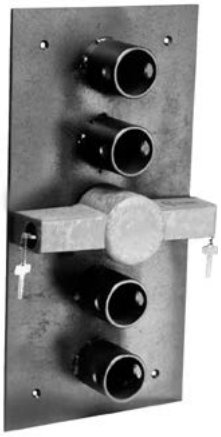

Semi-Trailer
Kingpin Storage Rack

HOW TO ORDER: J SERIES

2J	7	L11	
Series	**Core Housing**	**Function Code**	**Options**
2J– standard body	**7**-pin housing accepts all Best cores	**L11**– single latch type **L21**– double latch type **D11**– single deadlatch type **D21**– double deadlatch type	**TA**– extended block without armor

Must specify key mark and number of keys or designate L/C for less core.

2P SERIES:
PUSH LOCKS FOR FILING CABINETS

Specifications
Material– Parts are solid brass; phosphor bronze springs.
Dimensions– See illustration and table.
Finish– 2P series 626 (satin chrome) standard finish.
The 2P series incorporates the BEST interchangeable core and requires special cabinet preparation. It may be keyed individually, keyed alike, masterkeyed or grand–masterkeyed with other BEST removable core products.

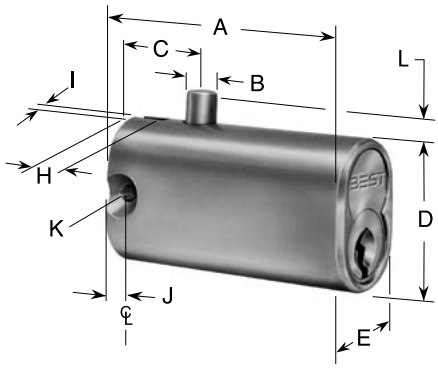

2P73 Vertical Mounting Slot

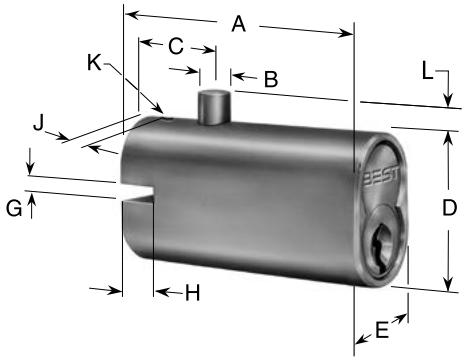

2P74 Horizontal Mounting Slot

Dimensions in inches Vertical Mounting Slot	A	B	C	D	E	F	G	H	I	J	K	L
2P73 (7Barrel)	2 9/32"	1/4"	19/32"	1 1/8"	3/4"			5/16"	1/8"	5/32"	#6-32	5/32"
Horizontal Mounting Slot												
2P74 (7Barrel)	2 9/32"	1/4"	19/32"	1 1/8"	3/4"	5/16"	1/8"			5/32"	#6-32	5/32"

2P	7	E	1	626
Series	**Lock Housing**	**Keyway**	**Combination Code**	**Finish**
2P– file	**7**– 7-pin body may be keyed 6-pin	Designate specific keyway	**1**– uncombinated **2**– combinated	**626**

2S SERIES
PUSH LOCK FOR SLIDING DOORS

Specifications
Case– Extruded brass
Width– 1 1/2"
Thickness– 23/32"
Inside Face Plate– 2 3/4" x 7/8" ; hole spacing 1 7/8"
Detachable Face Plate– 1/16" x 1 1/8" x 2 3/4" ; hole spacing 2 3/16"
Finish– Base finish, 626, supplied unless otherwise specified

2S73
Surface mounted

FUNCTION CODE CHART

Function Code	Door Thickness	Bolt	Operation
2S73	to 1 5/8"	19/32" dia. 1/2" throw	When unlocked, case of lock moves out through door stile and may be used as handle for moving door. To lock **2S73** and **2S74** push case in through door. Spring locking action. To lock **2S75** operate key and push case "IN" through door to engage bolt retaining pin behind strike plate in opposite door.
2S73 x TBM	7/8" to 1 5/8"	19/32" dia. 1/2" throw	
2S74 x TBM	7/8" to 1 5/8"	19/32" dia. 3/4" throw	
2S75	3/4" to 1 5/8"	1/2" dia. x 7/16" Bolt engagement 1/8" locking pin	

*Screws may be cut up to 5/8" shorter for doors to 7/8" door thickness.

2S74 x TBM
Through bolt mounted

HOW TO ORDER: 2S SERIES

2S	7	5	626	
Series	**Core Housing**	**Function Code**	**Standard Finish**	**Options**
2S– sliding door push lock	**7**– 7-pin housing accepts all Best cores	see above	**626**– standard **605 606** **622 625**	**SP**– support plate*

**

*Cannot be used with through bolt mounted (TBM) option. Available in 626 only. **Must specify key mark and number of keys or designate L/C for less core.

2S75
Surface mounted w/retaining pin

3S SERIES
SLIDING PANEL LOCK

Operation
A stainless steel strap mounts permanently on the inner sliding panel. When panels are closed, the tongue of the strike strap extends beyond the edge of the outer panel. To lock panels, slide lock housing as close to overlapping panel edge as possible and lock by turn of key. Key is removable in locked position only.

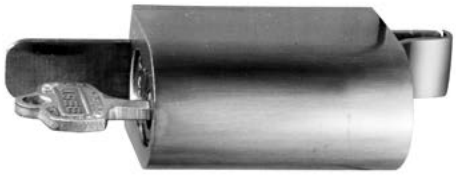

3S75

3S-Strike Strap Chart

Type	Length	Panel
3SS1	4 ¼"	¼"
3SS2	6 ¼"	¼"
3SS3	6 ¼"	5/16"
3SS4	6 ¼"	13/32"
3SS5	6 ¼"	¾"

Specifications
Strike Strap– Stainless steel, ½" wide
Finish– 627 aluminum only

3S77

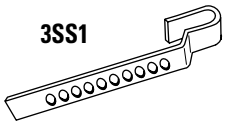

3SS1

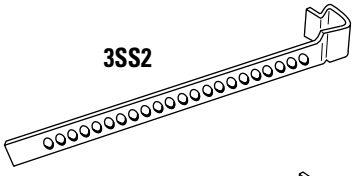

3SS2

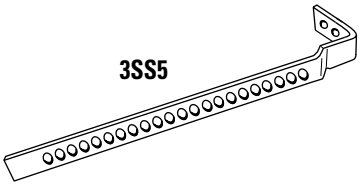

3SS5

HOW TO ORDER: 3S SERIES

3S	7	5	3SS2	627
Series	**Core Housing**	**Function Code**	**Combination Code**	**Standard Finish**
3S– sliding panel lock	**7**– 7-pin housing accepts all Best cores housing	**5**– straight lock housing **7**– captured panel lock **8**– 1" extended housing	**3SS2**– standard unless otherwise specified	**627**

Must specify key mark and number of keys or designate L/C for less core.

4S SERIES
SLIDING DOOR CYLINDER

The 4S73 locking cylinder for sliding doors offers quality security and Masterkey versatility by integrating a modified BEST interchangeable core into the actual locking mechanism. This machined solid brass cylinder is designed for use on display cabinets, window displays, or other storage areas that are closed by sliding panels of glass, plastic, wood, etc. Available in a variety of finishes (bright chrome standard), the 4S73 can be keyed into any new or existing BEST System.

Specifications
Cylinder– Head diameter– 1 ⅜", cylinder projection– ⅜". Fits 1 3/16" diameter hole in door. Machined from solid brass.
Clamp Plate– Stainless steel.
Mounting– Cylinder attached with 2 stainless steel screws. Supplied with 2 clear vinyl washers for mounting on glass doors.
Door thickness– ¼"
Finish– 625 bright chrome supplied standard. Available in 605, 606, 626.
Core– Special 7 pin core prevents complete removal of core from cylinder. Machined from solid brass. 6C or 6CT core is required.
Operation– Core body blocks door from sliding open when in the locked position. To unlock, insert key to retract locking lug and pull core forward to the unlocked position. 6C core must be ordered if key is to be removable in the locked or unlocked position. 6CT core must be ordered if key is to be removable only in the locked position.

4S73 Mounted on glass cabinet-unlocked position

4S73 Mounted on glass cabinet-locked position

HOW TO ORDER: 4S SERIES

4S	7	3	625
Series	**Core Housing**	**Function Code**	**Standard Finish**
4S– sliding door cylinder	**7**– 7 pin housing accepts (6C or 6CT only)	**3**– standard **4**– for wood doors	**626**– standard **605 606 622**

Must specify key mark and number of keys or designate L/C for less core.

KRD SERIES
KEY RETAINING DEVICES

Key Retainer Device Operation and Benefits

The key retaining device is an effective tool for improving key control. With a key retaining device, a release key is inserted into the retaining device and rotated. The rotation of this key both releases the retained key and traps the release key. The release key remains trapped until the retained key is returned and rotated. When this happens, the release key can be extracted, but the retained key is trapped. These retaining devices establish accountability for important keys (ex: master keys, emergency bypass keys, etc.) and dramatically reduce both human mistakes and risk exposure for higher level keys. These effective put-and-take systems act as mechanical sign-out sheets. When the cores are installed, the standard #10 front mounting screws are concealed. Additional 1/4-20 threaded mounting holes are provided in the back of each KRD case.

How It Functions...A simple put-and-take method of operation

GM or any high level key retained in KRD waiting for any authorized user to remove it when needed

An authorized user inserting their personally identified release key

User rotates release key and the high level retained key is now ready for removal

Authorized user removing the previously secured high level key and can use it as needed

Authorized user key is retained (held captive/trapped) until the high level key is returned to its secure location

KRD-2 BEST Core Model (Cores and Keys not included)
Two core retaining device with one retained core and key and one release core and key. Accepts 5, 6 and 7 pin BEST cores.
Case: Precision machined from solid aircraft aluminum bar stock
Size: 2 1/4" High x 4 1/2" Long x 2 1/4" Deep.
Weight: 2 pounds
Finish: Clear anodized – 628 *
Options:
– **S:** Internal low-voltage SPDT switch
– **SS:** Security Seal
* Other colors are available

KRD-2

KRD-2H Hybrid (Cores and Keys not included)
The Hybrid KRD is used to combine, in one device, a BEST core with another manufacturer's core. Two models are currently available: Sargent RC and Schlage FSIC (contact your local BEST office for information on other models).

KRD-2H – SAR/BEST

KRD-2H – BEST/SCH

These two KRD-2H Hybrids have the BEST core as the retained position, but the user can decide which core position is to be the release and which is to be the retained.

Specifications for KRD-2H Hybrids are the same as the KRD-2 shown above.

KRD-2 Non-BEST Full Size Core Models (Cores and Keys not included)
Identical in operation to the KRD-2 for BEST cores, but these devices will accept other manufacturers' IC's and RC's. Some manufacturers of both 6 and 7-pin cores require a different version for each. A complete listing appears in HOW TO ORDER below. Specifications for these models are the same as the KRD-2 shown on the previous page.

KRD-3 BEST Core Dual Function Model (Cores and Keys not included)
This three core model accepts BEST 5, 6 and 7-pin cores and provides the user with a choice of two different functions:

Function "A" – Dual Custody - 2 release keys presented to release 1 retained key: Two release keys must be simultaneously inserted into the retaining device and rotated 90 degrees. The rotation of these two keys traps them and releases the retained key. The release keys remain trapped until the retained key is returned and rotated. When this happens, the release keys can be extracted, but the retained key is trapped.

Function "B" – 1 release key presented to release 2 retained keys: A release key is inserted into the retaining device and rotated 90 degrees. The rotation of this key releases the retained keys, which should both be simultaneously removed, and traps the release key. The release key remains trapped until both of the retained keys are returned and rotated. When this happens, the release key can be extracted, but the retained keys are trapped.

Case: Precision machined from solid aircraft aluminum bar stock
Size: 2 1/4" High x 6 3/4" Long x 2 1/4" Deep.
Weight: 3 pounds
Finish: Clear anodized – 628 *
Options:
– **S:** Internal low-voltage SPDT switch
– **SS:** Security Seal (s)
Specify quantity and post.location(s)
* Other colors are available

KRD-3 (Function "A" Shown)

KRD Options
-S Switch
Internal low-voltage SPDT switch rated at 5A, 125VAC supplied with a 3-wire, 36" jacketed cable. This switch can be used to connect any KRD to an annunciator, control circuitry, a camera, an access control system with alarm monitoring capability, a linked output, etc.

-S SSecurity Seal(s) (Seals not included)
Allows you to use a breakable seal on a retained key to provide a simple and effective visual indicator that this key has NOT been used.

-SS Option (Shown on KRD-2)

HOW TO ORDER: KEY RETAINING DEVICES

Key Retaining Devices	Part Number
KRD-2 BEST Core Model	UL-KRD-2
KRD-2H Hybrid (Sargent/BEST Model)	UL-KRD-2H SAR/BEST
KRD-2H Hybrid (BEST/Schlage FSIC Model)	UL-KRD-2H BEST/SCH
KRD-3 BEST Core Dual Function Model	UL-KRD-3
Non-BEST Full Size Core Models	
KRD-2 Corbin Russwin 6-pin IC	UL-CR6-KRD-2
KRD-2 Corbin Russwin 7-pin IC	UL-CR7-KRD-2
KRD-2 Medeco IC	UL-MED-KRD-2
KRD-2 Sargent RC	UL-SAR-KRD-2
KRD-2 Schlage FSIC	UL-SCH-KRD-2
KRD-2 Yale 6-pin IC	UL-YA6-KRD-2
KRD-2 Yale 7-pin IC	UL-YA7-KRD-2
Switch and Security Seal Options	Add -S and/or -SS suffix
Also available: Special KRD-4, Custom Hybrids and Functions, Multi-Key Switches, etc.	

MISCELLANEOUS

STANLEY®
Security Solutions

Stanley Security Solutions, a business division of Stanley Black & Decker, is a provider of integrated access control and security solutions for institutional, commercial and industrial businesses and organizations. Stanley Security Solutions delivers a comprehensive suite of security products, software and integrated systems with a strong emphasis on service. Stanley Security Solutions is committed to extending its position as a leading comprehensive resource for a broad and extensive array of solutions that span the entire security spectrum.

© 2014 Stanley Security Solutions, Inc.

www.stanleysecuritysolutions.com

BA-0031 • 07/14