24303034

PIM400-485 USER GUIDE

User guide for the panel interface module PIM400-485

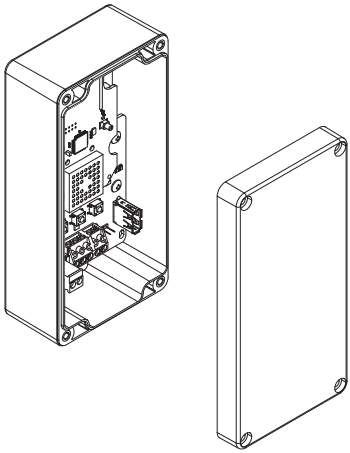

Version 2

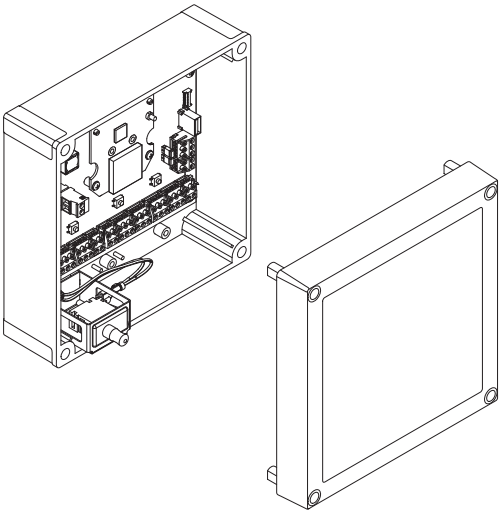

Version 1
(Manufacturing discontinued)

Para el idioma español, navegue hacia www.schlage.com/support
Pour la portion française, veuillez consulter le site www.schlage.com/support

Contents

Overview 3
Getting started 3
Features 4
Components 4
Installation 6
Determine the location 6
Pre-installation test 6
Drill holes for wiring 7
Mount the PIM400-485 8
Wire routing 8
Cable/wire specifications 8
Retrofit 9
PIM400-485 to ACP connection 10
Typical PIM400-485 to ACP Wiring Diagrams 11
Optional remote antenna 13
Link mode 13
Schlage utility software (SUS) 13
Reset to factory defaults 14
DC power 14
Complete the installation 14
Troubleshooting 15
FCC/IC Statements 16

To comply with FCC and Industry Canada RF radiation exposure limits for general population, the antenna(s) used for this transmitter must be installed such that a minimum separation distance of 20cm is maintained between the radiator (antenna) and all persons at all times and must not be co-located or operating in conjunction with any other antenna or transmitter.

This product is compliant of UL 294 and ULC S319 standard. This product's compliance would be invalidated through the use of any add-on, expansion, memory or other module that has not yet been evaluated for compatibility for use with this UL Listed product, in accordance with the requirements of the Standards UL 294 and ULC S319. This product has been evaluated for ULC-S319 Class I.

Overview

This manual describes the installation, operation and interaction of all Schlage PIM400-485 models with Access Control Panels (ACPs) and Wireless Access Point Modules (WAPMs). The PIM400-485 is a product in the AD-400 Wireless Panel Interface Module (WPIM) category.

There are two versions of the PIM400-485. Both versions have the same features and connections, and both have interchangeable configurations and settings.

- The PIM400-485 is wired to a UL or cUL Listed compatible Access Control Panel (ACP).
- The PIM400-485 has been evaluated for UL and cUL compliance in indoor applications only, within the protected premises.
- Connect the PIM400-485 to external power using a UL294 Listed power limited power supply for UL installations, and a ULC S318/ULC S319 Listed Power Supply for cUL installations.
- Installation location is determined by the location of the WAPM. The PIM400-485 is ideally installed very close to the ACP.
- The PIM400-485 communicates to the WAPM(s) using Radio Frequency (RF).
- The WAPM is installed at the access point where access will be controlled and/or monitored.
- The PIM400-485 enclosure is NEMA Type 4.

Getting started

The following is an overview of the steps required to set up the PIM400-485:

1. Install the WAPM (AD-400, WPR400, etc). See the installation guide that came with the WAPM, or visit www.schlage.com/support for more information.
2. Make sure the PIM400-485 is located to allow for optimum RF signal transmission. See *Determine the location* on page 6 for more information.
3. Before installing the PIM400-485, check for proper communication function and linking with WAPM(s). See *Pre-installation test* on page 6 for more information.
4. Make sure to follow unique installation procedures if installing on an indoor metallic wall. Refer to *Mount the PIM400-485 on page 8* for more information. Consult the Schlage Utility Software User Manual for information about configuring the PIM400-485 and the WAPM.
5. Familiarize yourself with the information contained in this user guide.

This user guide is for the PIM400-485 only.

Save this user guide for future reference.

Features

Feature	Description
Power status	Power status is indicated by the **Power/Tamper LED.** When the PIM400-485 is powered and tamper is not detected (cover is on), the **Power/Tamper LED** will illuminate steady green.
ACP communication status	ACP communication status is indicated by the **receive (RX) LED** and the **transmit (TX) LED**. When the PIM400-485 communicates with an ACP, the **receive (RX) LED** and the **transmit (TX) LED** will continuously flash randomly.
WAPM communication status	WAPM Communication Status is indicated by the **link 1 LED** and the **link 2 LED**. When the PIM400-485 communicates with a WAPM, the **link 1 LED** will blink if the WAPM is assigned an odd number, and the **link 2 LED** will blink if the WAPM is assigned an even number.
Tamper status	Tamper Status is indicated by the **power/tamper LED.** When the cover is off, tamper is detected and the **power/tamper LED** will flash green. When the cover is on, tamper is not detected and the **power/tamper LED** will illuminate steady green.
Reset	Reset is performed by the **reset button**. Press the **reset button** if the PIM400-485 does not seem to work properly.

Components

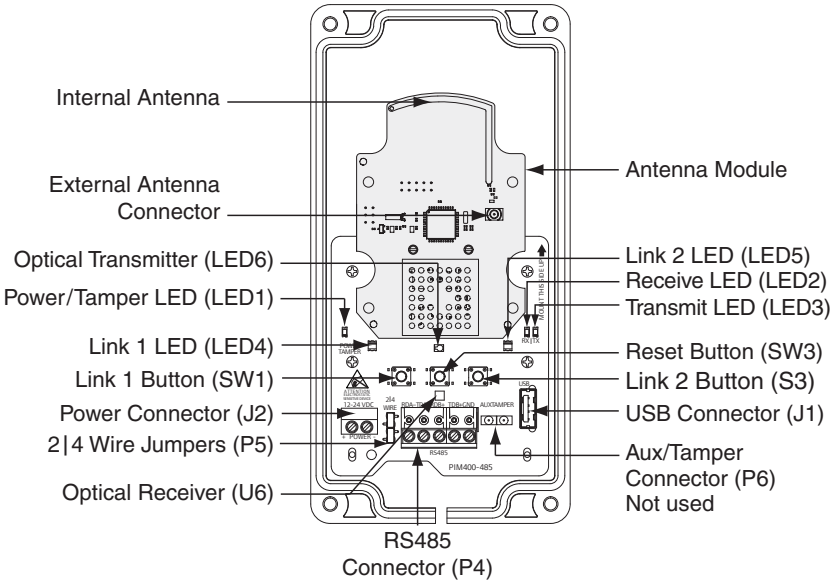

PIM400-485 (Version 2)

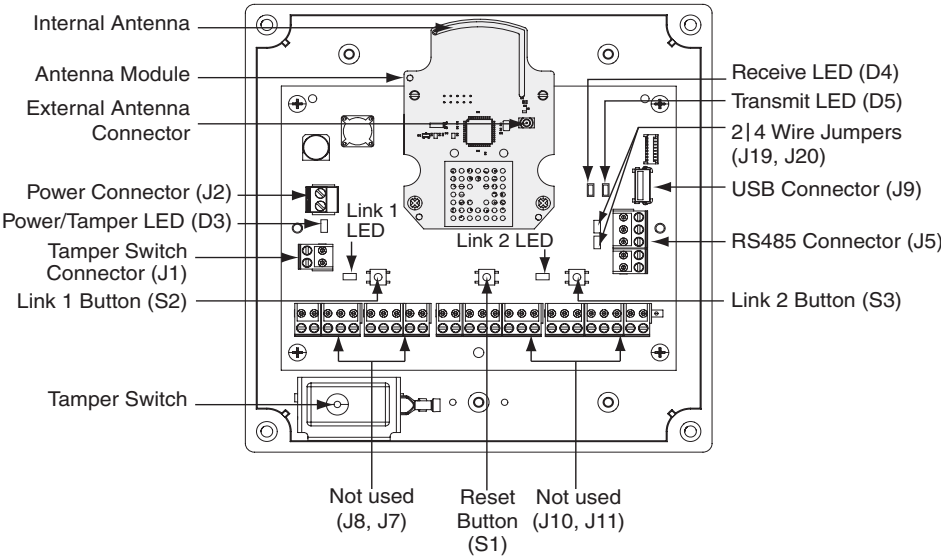

PIM400-485 (Version 1)

Component	Description
RS485 connector	The PIM400-485 connects up to 16 WAPMs to an Access Control Panel using the RS485 connection.
Power connector	The PIM400-485 power input is non-polarized. If power is lost or cycled, upon restoring power, the PIM400-485 will continue operation with the same configuration and linking information. **There is no need to re-configure or re-link**.

Determine the location

The PIM400-485 communicates with WAPMs using radio frequency (RF) signals. RF signals are diminished by walls, distance, metal objects or barriers. Consider the following when placing the PIM400-485:

- Mount the PIM400-485 within 200 horizontal feet (61 meters) of each WAPM with typical building construction. When clear line-of-sight is available, communication may be possible up to 1000 feet (305 meters).
- Do not mount the WAPM(s) and the PIM400-485 on different floors. The signal may be degraded and functionality could be severely limited.
- Do not mount the PIM400-485 on a metal surface. A separation of at least one inch must be maintained in all directions from any metal.
- Signal will not pass through metal walls or metal mesh in the walls (stucco). Use a remote antenna module located outside the room when necessary.
- Moving vehicles will interrupt the signal. Placement distance should be reduced by half when vehicles may temporarily block the signal.
- Mount the PIM400-485 or the remote antenna so that the antenna is vertical for optimal communication.

Locations and wiring methods shall be in accordance with the National Electrical Code, ANSI/NFPA 70 for U.S. and Canadian Electrical Code for Canada.

Pre-installation test

Once the location for a PIM400-485 is estimated to support the WAPM(s), check performance prior to installation.

If using a remote antenna module, install the antenna as indicated in the ANT400 user guide.

1. As close as possible to its exact mounting location, temporarily mount the WAPM to the access control point (i.e. door, gate, elevator). Do not connect power yet.
   The WPR400 may be used as a portable range tester to facilitate properly locating the PIM400-485.
2. Temporarily mount the PIM400-485 in the exact location and orientation it will be mounted.
3. Power the PIM400-485 with a 12 or 24 VDC supply capable of delivering 250 mA.
4. Put the PIM400-485 into link mode. Refer to *Link mode on page 13*.
5. Go to the most distant WAPM being tested and apply power.
6. Put the WAPM into link mode. Refer to the WAPM's User Guide for Link instructions.
7. Verify that linking has occurred, indicated at the WAPM by the green LED flashing and optionally by an internal sounder beeping. The number of green flashes and audible beeps will be the same as the channel number to which the PIM400-485 is set.

If linking occurred successfully on the first WAPM, repeat the pre-installation test on any additional WAPMs. If all linking is successful, follow steps to wire and mount the PIM400-485 and any additional WAPMs (see *Drill holes for wiring* on page 7).

- **If linking is unsuccessful**, move the PIM400-485 six to ten inches (15.2 to 25.4 cm) in any convenient direction until all WAPMs link successfully. If still not successful, move the PIM400-485 closer to the WAPMs and repeat the pre-installation test, or add more PIM400-485s.
- If still not successful, RF interference may be the cause. Refer to the Schlage Utility Software user guide for information on changing the RF channel.

Drill holes for wiring

Drill hole(s) in the PIM400-485 enclosure to accommodate the size and number of entry/exit connectors to be used.

Drill a hole in the top of the PIM400-485 for remote antenna installation only.

<u>DO NOT</u> run signal or power wiring through the top of the PIM400-485 enclosure. Be sure to follow all local electrical code requirements.

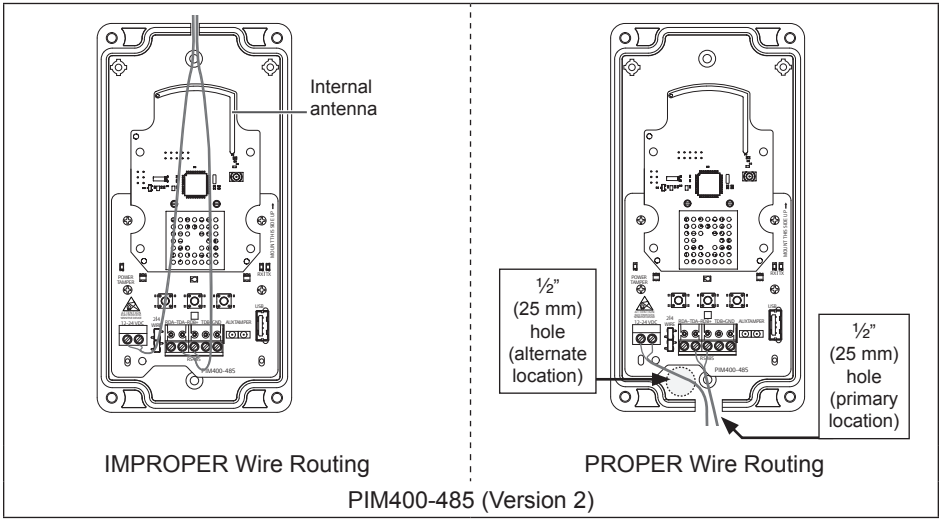

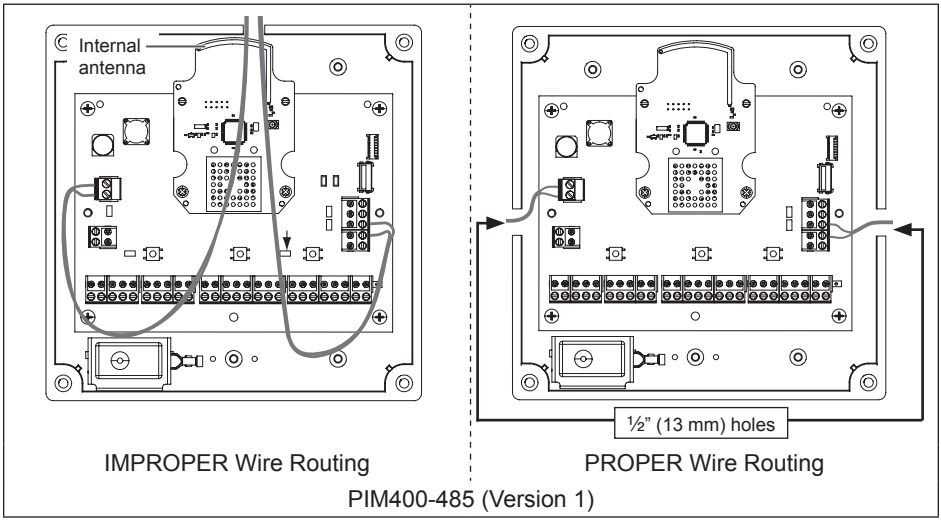

ⓘ **A single drill hole may be used for wire routing, however be sure to avoid routing wires near the internal antenna and the mechanical tamper switch.**

ⓘ **If using a remote antenna module, an additional hole is required. Refer to the ANT400 user guide for drilling instructions.**

Mount the PIM400-485

1. Remove the cover and place the PIM400-485 against the wall in the location where it successfully passed the Pre-Installation Test.
2. Mark the four (4) mounting hole locations on the wall with a pencil using the PIM400-485 enclosure as a template.

ⓘ **Be sure to mount the PIM400-485 vertically (refer to diagrams on page 7***).*

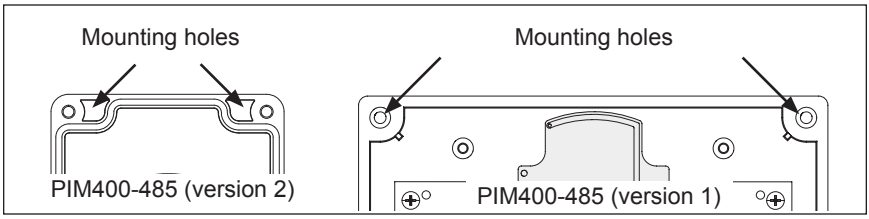

3. Remove the PIM400-485 from the wall and drill the four holes (1⁄16” diameter drill bit recommended).

ⓘ **If the wall does not adequately support the PIM400-485, wall anchors should be used.**

4. Place the PIM400-485 against the wall where the four holes are drilled and screw four screws into the mounting holes (#6 screws recommended).

ⓘ **If mounted on a metallic surface or where metal is within 1 inch (25 mm) of the back of the PIM400-485, mount the PIM400-485 at least 1 inch (25 mm) from the wall.**

ⓘ **If a remote antenna is to be used, refer to the ANT400 user guide.**

Wire routing

Avoid routing the wires near the internal antenna and the tamper detection mechanism. Improper wire routing may reduce RF performance and/or prevent tamper detection. Wire routing inside the enclosure should be as short as possible. Do not coil any excess wire inside the enclosure.

Refer to wire routing diagrams on page 7.

Cable/wire specifications

Application	Part number	AWG	Description	Max distance
DC Power Input	Belden 8760 or equivalent	18	2 Conductor	1000 Feet (305 meters)
RS485	Belden 9841 or 9842 or equivalent, or as specified by local electrical codes or the ACP provider	24	2 or 4 Conductor shielded	4000 Feet (1219 meters)

Retrofit

If desired, to retrofit an existing PIM400-485 (version 1) installation with a PIM400-485 (version 2), complete the following steps:

1. Disconnect all electrical connections to the PIM400-485 (version 1) PCBA.
2. Remove the four screws from the PIM400-485 (version 1) PCBA. Set aside two (2) of the screws for later use.
3. Remove the PIM400-485 (version 1) PCBA from the enclosure.
4. Drill a ½” (25 mm) wire routing hole in the bottom of the PIM400-485 (version 2) as shown below.
5. Place the PIM400-485 (version 2) into the PIM400-485 (version 1) enclosure as shown below.
6. Secure the PIM400-485 (version 2) enclosure to the PIM400 (version 1) enclosure using the two screws removed at step 2.

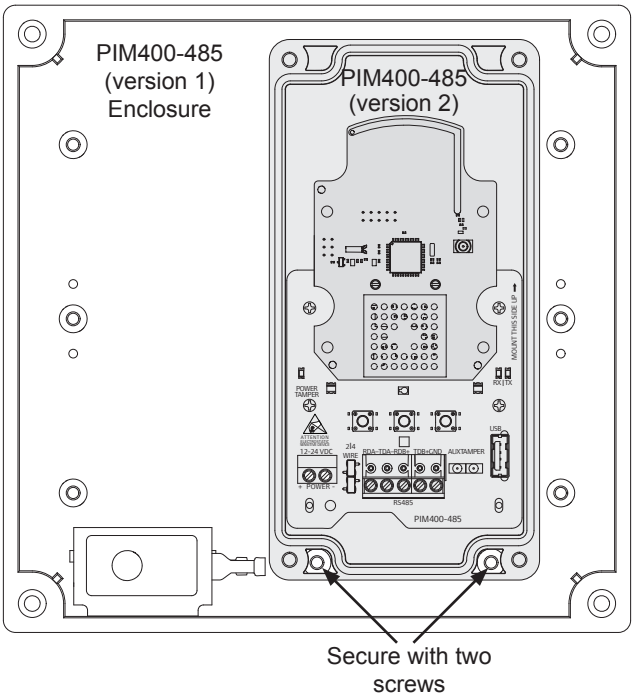

Enclosure covers for both the PIM400-485 (version 2) and PIM400-485 (version 1) are used when installing the retrofit configuration.

If a remote antenna is to be used, refer to the ANT400 user guide.

The retrofit installation procedure is not evaluated by UL/cUL.

PIM400-485 to ACP connection

Review *Components* on page 4 before connecting the PIM400-485 to an Access Control Panel.

CAUTION: Disconnect the Access Control Panel power and batteries before wiring the PIM400-485 to the panel.

WARNING: Because every Access Control Panel is different, always check the panel's instruction manual for appropriate interface wiring.

The EIA RS485 specification labels the data wires as "A" and "B", however, many RS485 products label their wires "+" and "-". Some products associate the "+" signal with "A", some with "B". Reversing polarity will not damage either RS485 device, it will just not communicate; if it does not work, switch the connections.

- The wires from the Access Control Panel must be a shielded twisted pair. For maximum wire lengths and cable specifications, refer to *Cable/wire specifications on page 8*.
- For compliance with UL 294 or ULC S319, product must be used with a UL 294 or ULC S319 Listed Access Control Panel or unit, respectively.
- Must be used with a UL 294 or ULC S318/ULC S319 Listed power-limited Power Supply capable of sourcing at least 250mA @ 12 or 24 VDC.

ACCESS CONTROL PANEL CONNECTIONS			
PIM400-485 connector	**PIM400-485 signal**	**Access control panel signal**	**Description**
Power (J2)	+	12 or 24 VDC	PIM400-485 inputs for 12 or 24 VDC power. Draws 250mA max. If the Access Control Panel (ACP) reader power outputs do not source enough current for the PIM400-485, use the ACP main regulated 12 VDC power supply or a separate UL294 or ULCS318/ULCS319 Listed 12 or 24 VDC power-limited power supply. Power input is non polarized.
	–	DC Ground	
RS485 (P5)	RDA –	– Receive Data	4-Wire or 2-Wire bi-directional RS485 communication port for interface to Access Control Panels. 2-Wire installation: Both 2|4 wire jumpers should be added. 4 -Wire installation: Both 2|4 wire jumpers should be removed. Refer to *Typical PIM400-485 to ACP wiring diagrams* on page 11 and page 12.
	TDA –	– Transmit Data	
	RDB +	+ Receive Data	
	TDB +	+ Transmit Data	
	GND	Signal Ground	

Typical PIM400-485 to ACP wiring diagrams

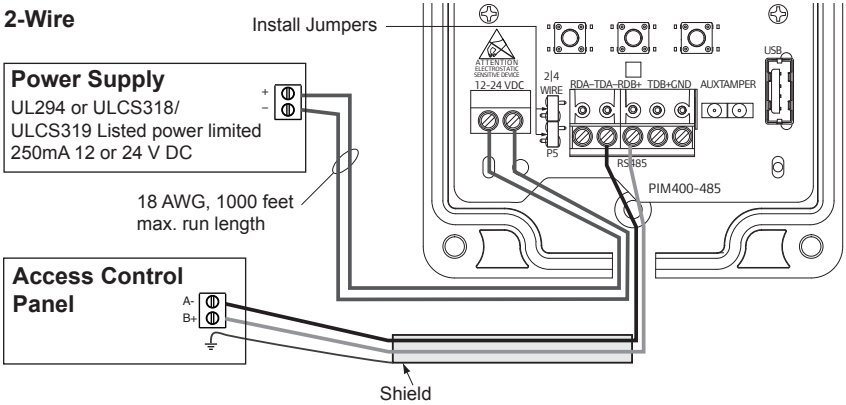

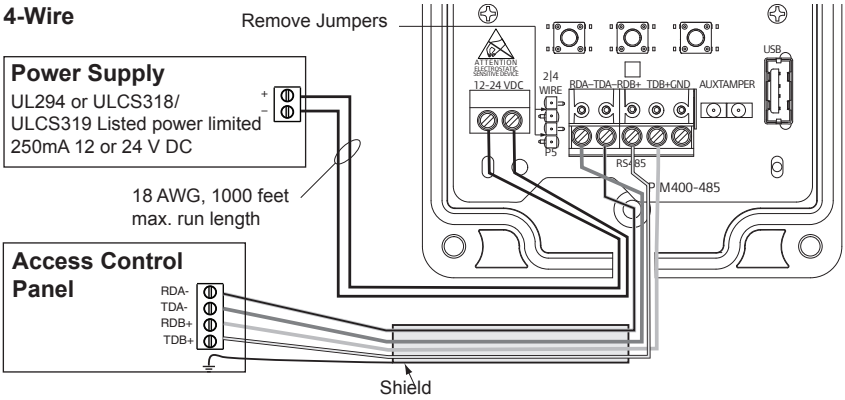

PIM400-485 Version 2

2-Wire

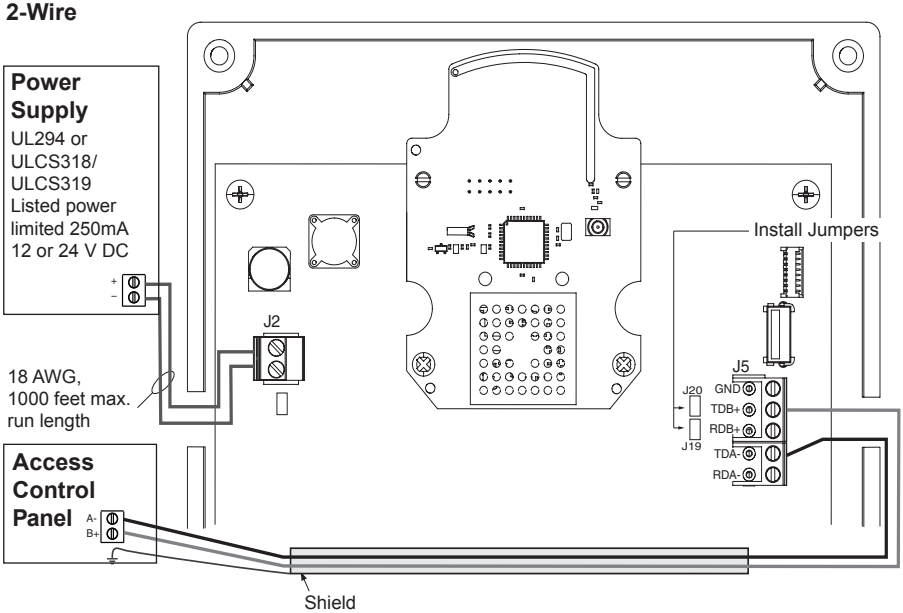

4-Wire

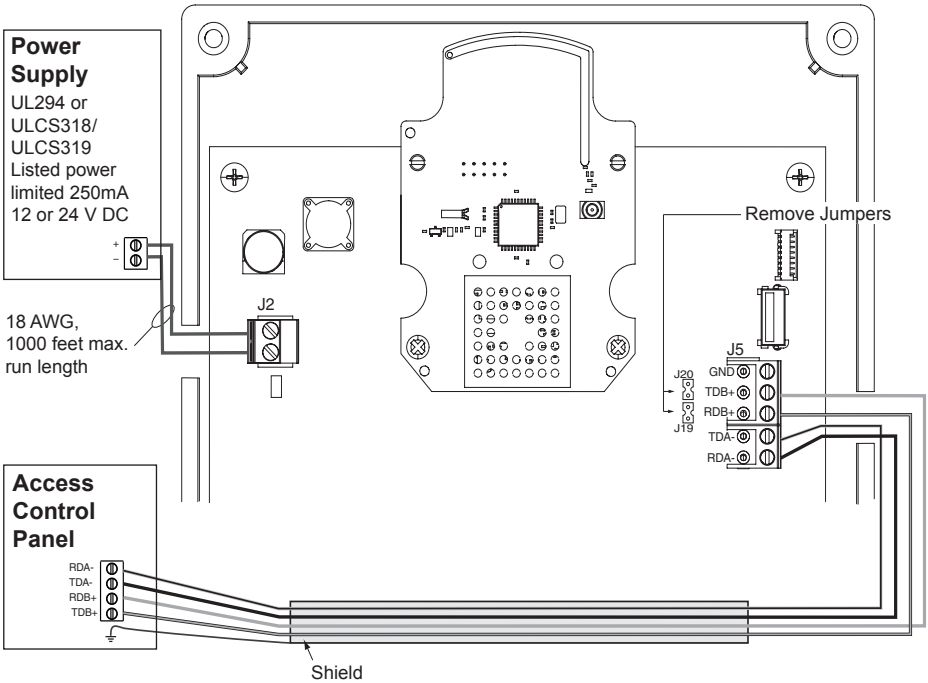

PIM400-485 Version 1

Optional remote antenna

The PIM400-485 may be used with a remote antenna when:

- the PIM400-485 needs to be located in a remote, more serviceable or secure area,
- the RF range needs to be increased, or
- the PIM400-485 needs to communicate with a WAPM located outdoors.

ⓘ **When the optional remote antenna is used, the PIM400-485 internal antenna will be disabled.**

Optional remote antenna models are shown below. For more information on remote antenna use and installation, refer to the ANT400 optional remote antenna user guide.

The optional remote antenna is not evaluated by UL.

OPTIONAL REMOTE ANTENNA MODELS			
Model	**Enclosure**	**Location**	**Description**
ANT400-REM-CEILING		Indoor	Optional remote omni-directional antenna (0 dB gain)
ANT400-REM-I/O	NEMA 4	Indoor/ Outdoor	Optional remote omni-directional antenna (0 dB gain)
ANT400-REM-HALL		Indoor	Optional remote bi-directional antenna (3.5 dB gain)
ANT400-REM-I/O+6dB	NEMA 4	Indoor/ Outdoor	Optional remote directional antenna (6 dB gain)

Link mode

The PIM400-485 can be placed into link mode using the Schlage utility software (SUS) on the handheld device (HHD). Refer to the Schlage utility software user guide for information.

The PIM400-485 can also be placed into Link Mode directly through select Access Control Panels.

Schlage utility software (SUS)

The Schlage utility software is used for programming and setup only.

The SUS is used to configure this device's links and outputs. For information about the SUS, refer to the Schlage utility software user guide.

Reset to factory defaults

All configuration information will be deleted and the PIM400-485 will be reset to factory defaults!

1. Remove the PIM400-485 cover.
2. Press and hold the **Link 1 button** and **Link 2 button** for about three (3) seconds. The **Link 1 LED** and the **Link 2 LED** will flash red when factory default reset configuration begins.
3. Release both the **Link 1 button** and **Link 2 button**. The **Link 1 LED** and the **Link 2 LED** will flash green when factory default reset configuration is complete.
4. Replace the PIM400-485 cover.

DC power

This connection is always required regardless of the system application or configuration. Refer to page 10 for instructions to connect DC power to the PIM400-485.

Complete the installation

After all required connections have been made, connect the power and Access Control Panel standby batteries (optional) to the panel. Standby batteries are required for ULC S319 applications for Access Control Panels and must be able to provide 30 minutes of standby for Class I. The system must be tested for operation at least once per year. Refer to Access Control Panel installation instructions for additional details.

Troubleshooting

Problem	Possible cause	Solution
The PIM400-485 does not communicate with the Access Control Panel.	The RS485 cable between the PIM400-485 and the Access Control Panel may be damaged.	Replace the RS485 cable between the PIM400-485 and the Access Control Panel.
	The RS485 signals between the PIM400-485 and the Access Control Panel may be wired incorrectly.	Refer to *PIM400-485 to ACP connection on page 10* or ACP system documentation for proper wiring instructions.
	The RS485 address of the PIM400-485 may not match the RS485 address assigned in the Access Control Panel.	Change the RS485 address of the PIM400-485 to match the RS485 address assigned within the Access Control Panel. Refer to the Schlage utility software guide for more information.
	The 2|4 wire jumpers (P5) may be improperly installed for communication with RS485 4-Wire or improperly removed for communication with RS485 2-Wire.	Install the 2|4 wire jumpers (P5) when communicating with RS485 2-Wire. Remove the 2|4 wire jumpers when communicating with RS485 4-Wire. Refer to *Typical PIM400-485 to ACP wiring diagrams on page 11* and page 12.

Problem	Possible cause	Solution
The PIM400-485 reports false tamper detections to the Access Control Panel.	An intense light source may cause interference with the optical receiver (version 2 model only) when the enclosure cover is removed.	Move the PIM400-485 (version 2 model only) away from the intense light source and ensure that the enclosure cover is installed.
	Improper wiring may cause interference with the optical transmitter and optical receiver (version 2 model only). Improper wiring may cause false tamper detection at the ACP (version 1 model).	Refer to *Wire routing on page 8* for proper wire routing instructions.
The PIM400-485 does not communicate with Wireless Access Point Modules (WAPMs)	The Antenna Module may not be properly installed.	Ensure that the Antenna Module is installed and properly seated.
	Wiring may cause interference with the internal antenna on the Antenna Module.	Check to ensure that wiring is properly routed in the PIM400-485 enclosure and the area around the internal antenna is clear of any wire. See *Wire routing* on page 8 for more information.
	The PIM400-485 may not be linked to the Wireless Access Point Module (WAPM).	Link the PIM400-485 to the Wireless Access Point Module. See *Link mode* on page 13 for more information. Also refer to the Wireless Access Point Module's User Guide for Link instructions.

FCC/IC Statements

The communication module is a 900 MHz transceiver for electronic locks and non-lock devices. The communication module links the access device to the Access Control Management System, with feedback control to the Access Device via a wireless means. The module contains the embedded firmware implementing the radio physical and data layers. There are 4 antennas associated with this module:

1. PCB trace inverted-L with a measured gain of 5.7dBi.
2. Omni, wall/post, indoors/outdoors.
3. Omni, ceiling, indoors.
4. Directional, wall/post, indoors/outdoors.
5. Bi-directional, ceiling, indoors.

Specifications of the radio module:
Power Output: 19.6 dBm
Operating Frequency: 906 -924 MHz
Modulation: BPSK

NOTE: The intended use of this module is not for the general public. It is generally for industry/commercial use only. This transceiver is to be professionally installed in the end product by Allegion, and not by a third party. The Schlage AD400 900 MHz Communication Board Module will not be sold to third parties via retail, general public or mail order. In the case of a repair, the transceiver will be replaced by a professional Installer.

Federal Communication Commission interference statement

This equipment has been tested and found to comply with the limits for a Class B digital device, pursuant to Part 15 of the FCC Rules. These limits are designed to provide reasonable protection against harmful interference in a residential installation. This equipment generates uses and can radiate radio frequency energy and, if not installed and used in accordance with the instructions, may cause harmful interference to radio communication. However, there is no guarantee that interference will not occur in a particular installation. If this equipment does cause harmful interference to radio or television reception, which can be determined by turning the equipment off and on, the user is encouraged to try to correct the interference by one of the following measures:

- Reorient or relocate the receiving antenna.
- Increase the separation between the equipment and receiver.
- Connect the equipment into an outlet on a circuit different from that to which the receiver is connected.
- Consult the dealer or an experienced radio/TV technician for help.

This device complies with Part 15 of the FCC Rules. Operation is subject to the following two conditions: (1) This device may not cause harmful interference, and (2) this device must accept any interference received, including interference that may cause undesired operation.

FCC/IC caution

Any changes or modifications not expressly approved by the party responsible for compliance could void the user's authority to operate this equipment.

To comply with FCC/IC RF exposure limits for general population/uncontrolled exposure, the antenna(s) used for this transmitter must be installed to provide a separation distance of at least 20 cm from all persons and must not be co-located or operating in conjunction with any other antenna or transmitter.

Industry Canada statements

Operation is subject to the following two conditions: (1) this device may not cause interference, and (2) this device must accept any interference, including interference that may cause undesired operation of the device.

To reduce potential radio interference to other users, the antenna type and its gain should be so chosen that the equivalent isotropically radiated power (e.i.r.p.) is not more than that permitted for successful communication.

This device has been designed to operate with the antennas listed below, and having a maximum gain of 9.3 dBi. Antennas not included in this list or having a gain greater than 9.3 dBi are strictly prohibited for use with this device. The required antenna impedance is 50 ohms.

Approved antenna list

Model Number		
23530553	1	Remote antenna, Omni, wall/post, indoors/outdoors
23530561	1	Remote antenna, Omni, ceiling, indoors
23530579	1	Remote antenna, Directional, wall/post, indoors/outdoors
23520587	1	Remote antenna, Bi-directional, ceiling, indoors

To comply with IC RF exposure limits for general population/uncontrolled exposure, the antenna(s) used for this transmitter must be installed to provide a separation distance of at least 20 cm from all persons and must not be collocated or operating in conjunction with any other antenna or transmitter.

Customer Service

1-877-671-7011 www.allegion.com/us

ALLEGION

© 2014 Allegion
24303034 Rev. 03/14-a