BLSW814

Vehicular Gate Operator

Installation Instruction & Owner's Manual

PLATINUM ACCESS SYSTEMS™

BLSW814
Installation Instructions and Safety Information Manual: Vehicular Gate Operator
Class I, Class II, Class III, and Class IV

Safety Information 4-8
Installation 9-10
Inductive Loops 11-12
Alarm Reset Switch 13
Plan of Installation 14-17
Electrical 18-19
Limit Switches 20
Primary/Secondary Connections 22
Loop Rack 23
Accessory Connections 24-27
Selectable Features 28-30
Maintenance 31
Gate Operator Trouble Shooting Procedure 32-33
Part 34

SAFETY INFORMATION

WARNING – To reduce the risk of severe injury or death to person, please to follow these instructions:

1. READ AND FOLLOW ALL INSTRUCTIONS MANUAL BEFORE ATTEMPTING ANY INSTALLATION.
2. Should never let children play with gate controls. Keep the remote control away from children.
3. Always keep people and objects away from the gate. “NO ONE SHOULD CROSS THE PATH OF THE MOVING GATE”.
4. Check and test the gate operator monthly. The gate MUST reverse on contact with a rigid object or when an object activates the non-contract sensors. After adjusting the force or the limit of travel, retest the gate operator. Failure to adjust and retest the gate operator properly can increase the risk of injury or death.
5. The gate system MUST be maintained properly. Have a qualified service person inspect, repair or adjust your system if any unusual behavior is observed or suspected.
6. Some companies offer a scheduled preventive maintenance service.
7. DO NOT EXCEED the equipment specifications.
8. Insure a safe and proper installation.
9. Install this equipment in accordance with the UL 325 specifications.
10. All installation MUST have secondary protection devices against entrapment, such as edge sensors and photo beams especially in places where the risk of entrapment is more likely to occur.
11. Gate is for vehicles only, a separate entrance for pedestrians is required.
12. SAVE THESE INSTRUCTIONS

SAFETY DEVICES:

1. Remove the Power Harness for the control board.
2. Check that all mounting hardware of the gate operator is properly tightened.
3. Ensure that the gate moves freely.
4. Check the battery for the following:
   Battery connections must be free of corrosion.
   Battery voltage must be 26.5 VDC minimum (fully charged battery).
5. Reconnect the Power Harness for the control board.
6. Make sure every installation has a minimum of one safety device (such as photo beams or loop detector).
7. Check for Reverse Sensitivity.
8. Make sure that all areas around the gate are safe and secure.

SAFETY INFORMATION

WARNING – To reduce the risk of severe injury or death to person, please to follow these instructions:

GENERAL SAFETY PRECAUTIONS WITH THE END-USER:

1. Instruct the end-user on how to safely operate all functions of the operator.
2. Instruct the end-user on how to safely use the Back-drive/ Emergency Release Options.
3. Clearly label and identify the circuit breaker for the operator and show the End-User the location of the circuit breaker for the operator.
4. Thoroughly explain any and all warranties associated with the operator and installation.
5. These instructions must be kept for reference and forwarded to all possible future users of the system.
6. Provide the End-User with the “Home Owner’s Manual Guide”.
7. The Manufacturer cannot be held responsible for possible damage caused by improper, erroneous or unreasonable use.
8. All cleaning, maintenance or repair work must be carried out by qualified personnel.
9. Failure to comply with the above may create a situation of danger.
10. All installation, maintenance and repair work must be documented and made available to the user.

Installer: _____

Signature: _____ **Date:** _____

Contact: _____

11. When gate is moving, do not:
    a. Allow any children to play near the moving gate.
    b. Attempt to obstruct the moving gate.
    c. Allow any one get close to the moving gate.
12. Keep remote control, or any other gate operator remote devices away from the children.
13. If operator breakdown, or mulfunction, please disconnect the operator from the main power source. Do not attempt to repair, or intervene directly by any one except a qualify personnel.

IMPORTANT INSTALLATION INSTRUCTIONS BY UL STANDARDS:

1. Install the vehicular gate operator only when:
    a. The gate operator is appropriate for the construction of the gate and the usage class of the gate.
    b. All exposed pinch points are eliminated or guarded.
2. The gate operator is intended for installation only on gates used for vehicles. Pedestrians must be supplied a separate access opening.
    a. The pedestrian access opening shall be designed to promote pedestrian usage. Locate the gate such that persons will not come in contact with the vehicular gate during the entire path of travel of the vehicular gate.
3. The gate must be installed in a location so that enough clearance is supplied between the gate and adjacent structures when opening and closing to reduce the risk of entrapment. Swinging gates shall not open into public access areas.

(CONTINUED ON NEXT PAGE...)

SAFETY INFORMATION

WARNING – To reduce the risk of severe injury or death to person, please to follow these instructions:

IMPORTANT INSTALLATION INSTRUCTIONS BY UL STANDARDS:

(CONTINUED FROM PREVIOUS PAGE)

4. The gate must be properly installed and work freely in both directions prior to the installation of the gate operator. Do not over-tighten the arm clamp to compensate for a damaged or poorly maintained gate.
5. The gate operator controls must be placed so that the user has full view of the gate area when the gate is moving and away from the gate path perimeter.
6. Controls intended for user activation must be located at least six feet (6') away from any moving part of the gate and where the user is prevented from reaching over, under, around or through the gate to operate the controls and shall be at least (5') from the ground as to be out of reach of children. Outdoor or easily accessible controls shall have a security feature to prevent unauthorized use. Also:
7. Ensure the Stop and/or Reset button must be located in the line-of-sight of the gate following rules above. Activation of the reset control shall not cause the operator to start.
8. A minimum of two (2) Warning Placards shall be mounted, one on each side of the gate where easily visible.
9. A gate operator **utilizing a non-contact sensor** such as an Photo beam or like in accordance with section 31.1.1 of the UL325 standard:
   a. Reference owner's manual regarding placement of non-contact sensor for each type of application.
   b. Care shall be exercised to reduce the risk of nuisance tripping, such as when a vehicle trips the sensor while the gate is still.
   c. One or more non-contact sensors shall be located where the risk of entrapment or obstruction exists, such as the perimeter reachable by a moving gate or barrier.
   d. We recommend (EMX IRB-325) use as a fail safe photoeye to comply with UL325.
10. A gate operator **utilizing a contact sensor** such as an edge sensor or like in accordance with section 31.1.1 of the UL325 standard:
   a. A hard wired contact sensor shall be located and its wiring arranged so the communication between the sensor and the gate operator is not subject to mechanical damage.
   b. A wireless contact sensor such as the one that transmits radio frequency (RF) signals to the gate operator for entrapment protection functions shall be located where the transmission of the signals are not obstructed or impeded by building structures, natural landscaping or similar obstruction. A wireless contact sensor shall function under the intended end-use conditions.
   c. One or more contact sensors shall be located on the inside and outside leading edge of a swing gate. Additionally, if the bottom edge of a swing gate is greater than 6 inches (152 mm) above the ground at any point in its arc of travel, one or more contact sensors shall be located on the bottom edge.
   d. The following model(s) are comply with UL 325: Miller Edge model MGR20 or MGS20 edge sensor.

gate operator class categories and examples

WARNING – To reduce the risk of severe injury or death to person, please to follow these instructions:

CAUTION: To Reduce the Risk of Fire or Injury to Persons

- Use only the type and size of batteries provided on an AC powered system: OUTDO-OT7-12
- Do not dispose of the batteries in fire. The cells may explode. Check with local codes for possible disposal instructions.
- Do not open or mutilate the operator batteries. Released electrolyte is corrosive and may cause damage to the eyes or skin. It may be toxic if swallowed.
- Exercise care in handling batteries in order not to short the battery with conducting materials such as metal parts, rings, bracelets and keys.
- Do not mix batteries of different sizes, from different manufacturers or of different ages in this product. Replace both batteries as a set.
- Observe proper polarity orientation between the batteries and charging circuit.
- Change the operator batteries provided with or identified for use with this product only in accordance with the instructions and limitations specified in this operator manual.

UL325 Gate Operator Classification

Install the gate operator only when: The operator is appropriate for the construction of the gate and the Usage Class of the gate.

RESIDENTIAL VEHICULAR GATE OPERATOR

CLASS I – A vehicular gate operator (or system) intended for use In a home of one-to four single family dwelling, or a garage or parking area associated there with.

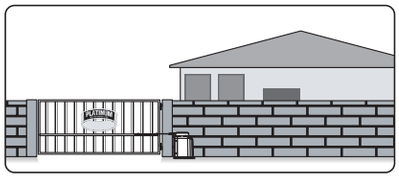

COMMERCIAL/GENERAL ACCESS VEHICULAR GATE OPERATOR

CLASS II – A vehicular gate operator (or system) intended for use in a commercial location or building such as a multi-family housing unit (five or more single family units), hotel, garages, retail store, or other building servicing the general public.

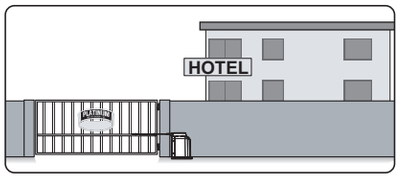

INDUSTRIAL/LIMITED ACCESS VEHICULAR GATE OPERATOR

CLASS III – A vehicular gate operator (or system) intended for use in an industrial location or building such as a factory or loading dock area or other locations not intended to service the general public.

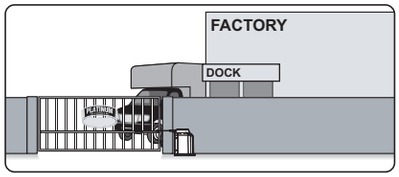

RESTRICTED ACCESS VEHICULAR GATE OPERATOR

CLASS IV – A vehicular gate operator (or system) intended for use in a guarded industrial location or building such as an air port security area or other restricted access locations not servicing the general public, in which unauthorized access is prevented via supervision by security personnel.

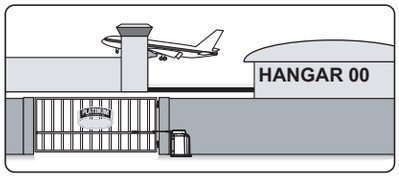

SAFETY INFORMATION

WARNING – To reduce the risk of severe injury or death to person, please to follow these instructions:

FOR USE WITH GATES OF A MAXIMUM OF 14 FT IN LENGTH AND 800 LBS. IN WEIGHT

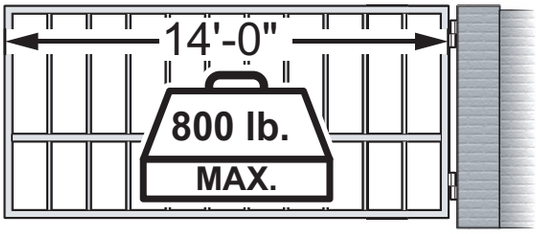

This is NOT a pedestrian gate operator

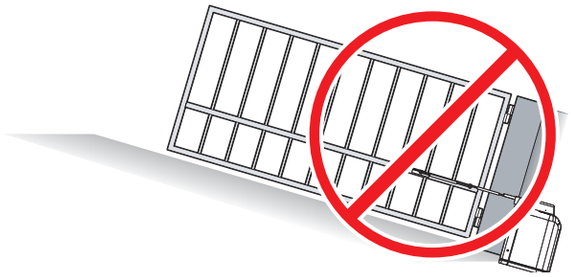

Do NOT Install the gate operator to lift gates

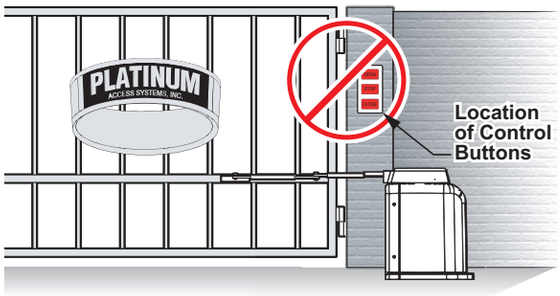

Control Buttons Location:

1. Within sight of the gate,
2. At a minimum height of 5 feet so small children are not able to reach it, and make sure it is away from all moving parts of the gate.

Specifications

Maximum Gate Length:	14 feet
Maximum Gate Weight:	800 lbs
Maximum Aperture Angle:	120 deg.
Power Requirements:	120 VAC Single Phase at 2 Amps or 220 VAC Single Phase at 1 Amp
Operating Temperature:	-20°C (-4°F) to 70°C (158°F)

INSTALLATION

WARNING – To reduce the risk of severe injury or death to person, please to follow these instructions:

Note: This type of installation DOES NOT reverse the gate all the way back to its limits when the photo-beam is obstructed. This installation is only to protect against entrapment and to comply with UL325.

Contact Sensor (Edge) Installation:

Secondary Entrapment Protection

One or more contact sensors shall be located on the inside and outside leading edge of a swing gate. Also if the bottom edge of a swing gate is more than 6” (152mm) above the ground at any point in its travel on or more sensors shall be located to protect from the bottom edge.

- A wireless contact sensor such as one that transmits radio frequency signals to the gate operator for entrap-ment protection functions shall be located where the transmission of the signals are not obstructed or im-peded by building structures, natural landscaping or similar obstruction. A wireless contact sensor shall function under the intended end-use conditions.
- A hardwired contact sensor shall be located and its wiring arranged so that the communica-tion between the sensor and the gate operator is not subjected to mechanical damage.

Use only Miller Edge 3-sided activation type MGR20 or MDS20 to comply with UL325

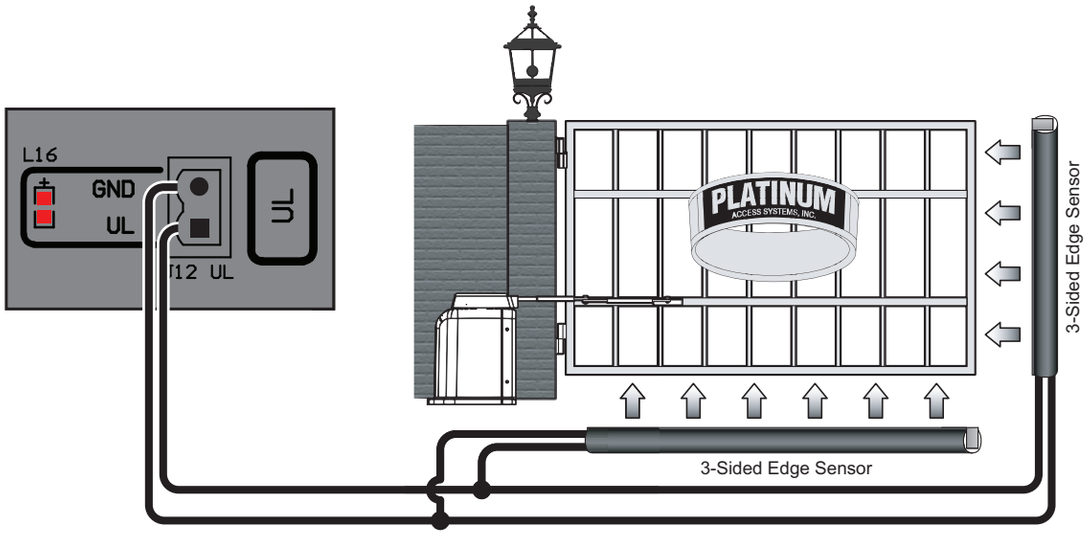

Manual Release

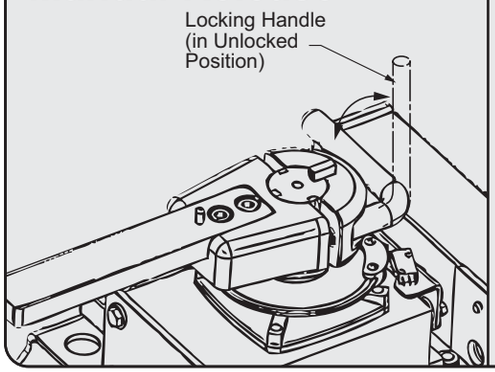

When manual operation is required:

1. Remove the Hat
2. Lift the Locking Handle.
3. Remove the Clutch Key

To reengage the gate operator:

1. Align the Clutch and the notches on the Output Shaft.
2. Insert the Clutch Key.
3. Push down the Locking Handle.
4. Reattach the Hat.

Attention: Lock and release operations MUST be performed with motor NOT RUNNING.

INSTALLATION

WARNING – To reduce the risk of severe injury or death to person, please to follow these instructions:

Note: This type of installation DOES NOT reverse the gate all the way back to its limits when the photo-beam is obstructed. This installation is only to protect against entrapment and to comply with UL325.

Non-Contact Sensors (Photoelectric Sensors) Installation:

One or more non-contact sensors shall be located where the risk of entrapment or obstruction exists, such as the perimeter reachable by a moving gate or barrier.

Install photoelectric sensors to protect against any entrapment or safety conditions encountered in your gate application.

We recommend the use of EMX IRB-325 photoeyes to comply with UL325.

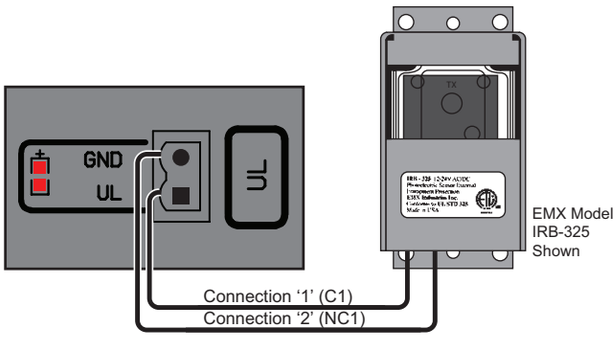

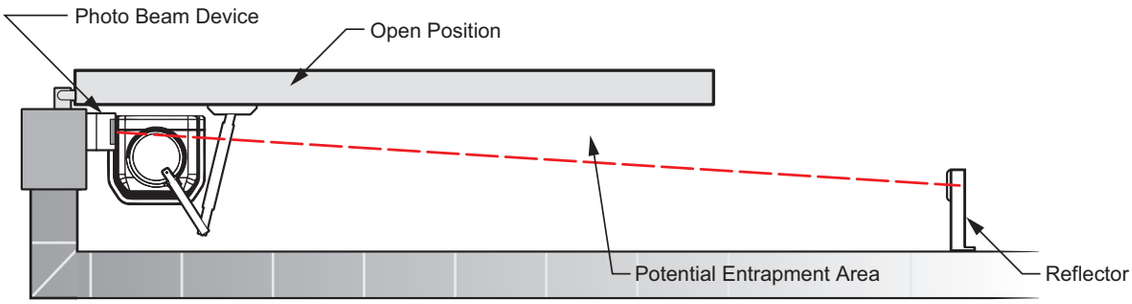

Consult the UL325 device installation manual for more detail information about the usage, installation and maintenance of this device.

Installation: Inductive Loops

WARNING – Consult the installation instructions from the loop detector manufacturer. The following statements are provided as a guide but different requirements may be required by the vehicular loop detector manufacturer.

Inductive Loops Installation:

Safety loops allows the gate to stay open when vehicles are obstructing the gate path.
If the gate is longer than the vehicles that pass through it a center loop is recommended and should be installed. A center loop prevents the gate from closing when a vehicle is between the safety loops.
Safety loops are required when using a center loop. See Loop Wiring.

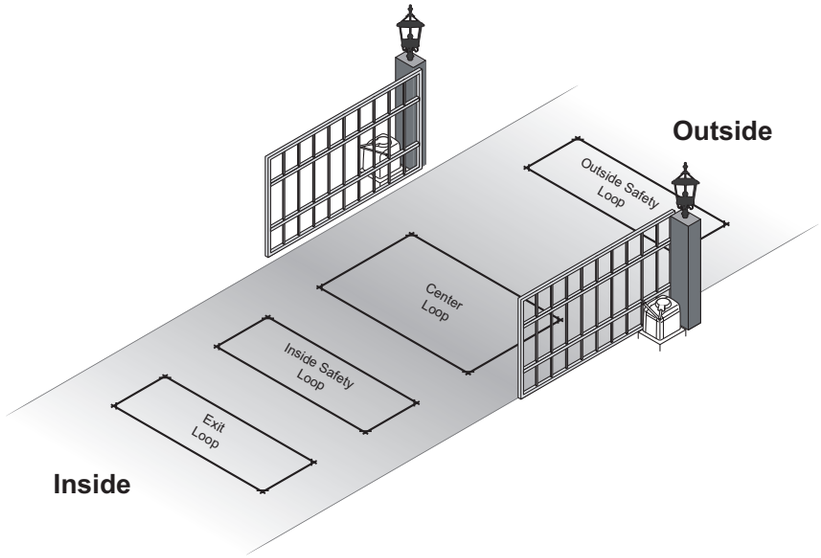

Check with local regulations and accepted best practice requirements for every installation.

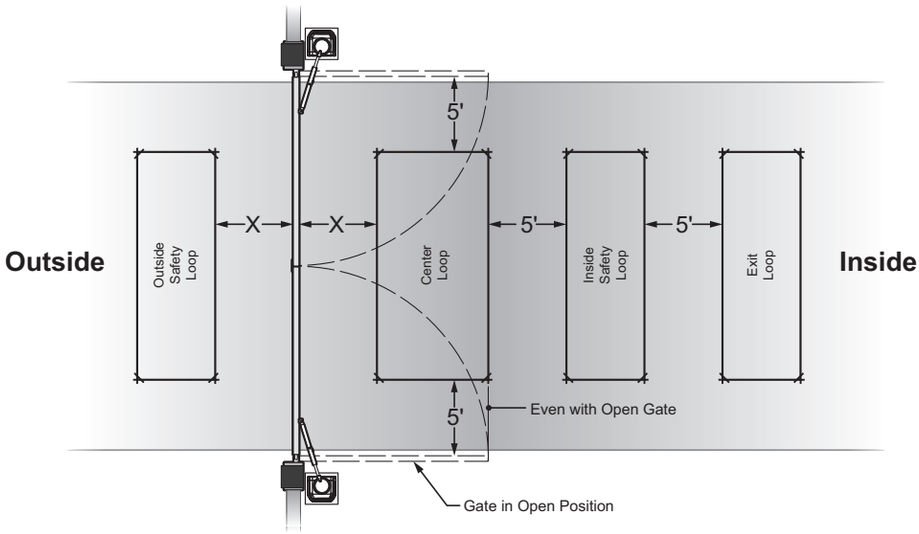

Installation: inductive loops

WARNING – This product is an accessory or part of a system. Always read and follow the manufacturer's instructions for the equipment before connecting this product. Comply with all applicable codes and safety regulations. Failure to do so may result in damage, injury or death.

Inductive Loops Installation:

New Slab Pour

Ty-wrap 1 1/4" PVC Pipe to the top of the rebar in the size and configuration of the loop (i.e. 4ft x 8ft). Then ty-wrap the loop to the top of the PVC frame. This stabilizes the loop during the pour and separates it from the rebar.

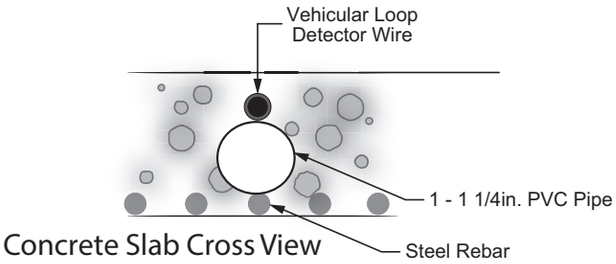

Saw Cut Existing Surface

Cut " deep into the existing surface, place a 45° cut at the corners to prevent sharp edges from damaging the loop wire. Notch out for the "T" connection where the lead wire connects to the loop. Remove all debris from the finished cut with compressed air. Place the loop into the saw cut. Place backer material into the saw cut over the loop wire and pack tightly. Place a high quality sealer over the saw cut to seal the surface.

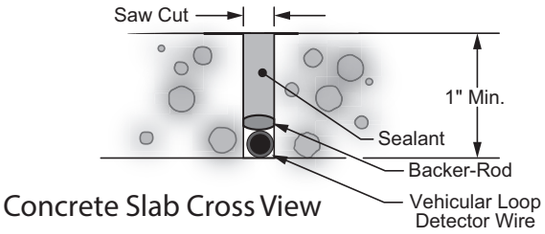

Resurface Asphalt

Saw cut the existing surface 3/4" deep and place a 45° cut at the corners to prevent sharp edges from damaging the loop wire. Remove all debris from the finished cut with compressed air. Place sand over the loop wire to the surface and pack tightly. Lay new asphalt.

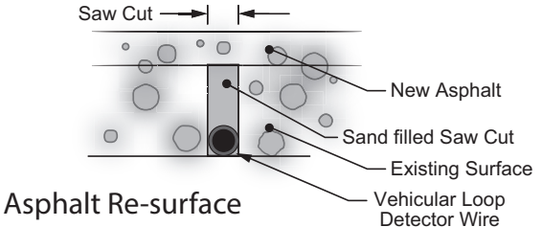

General Installation Guidelines

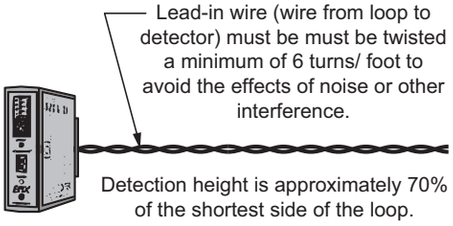

Recommended # of Turns

Perimeter in Feet	# of Turns
10	5
20	4
30-40	3
50-100	2

Installation: Alarm Reset Switch & Warning Placards

WARNING – To reduce the risk of severe injury or death to person, please to follow these instructions:

Alarm Reset Switch Installation: (UL 325 standard requires)

An audible alarm to go off after two consecutive events detected by the primary entrapment protection of the gate operator. The audible alarm will continue to sound for 5 minutes or until a stop command gets actuated. The Stop command can be actuated in two different forms.

1. The Built in Stop switch on the Control Box.
2. The External Stop button within the sight of the gate, away from moving parts of the gate and out of reach of children.

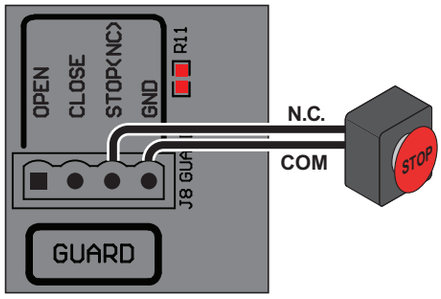

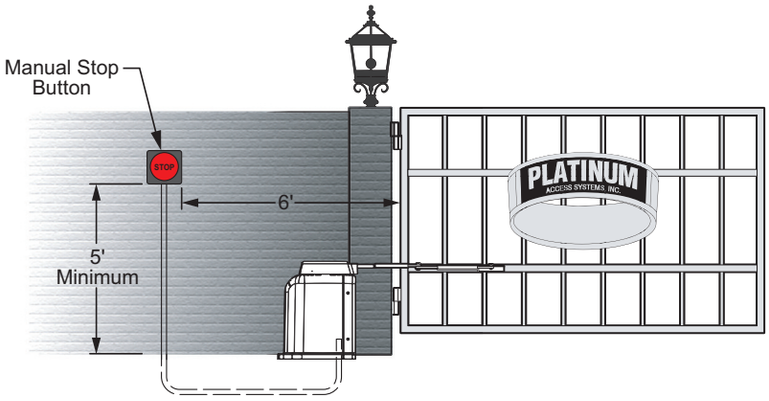

Warning Placard Installation:

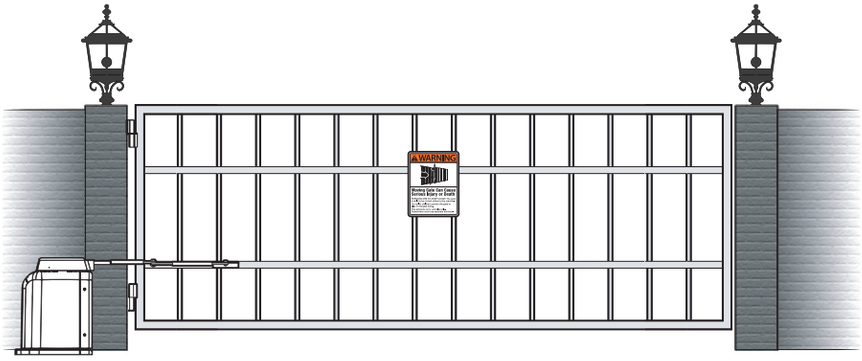

All Warning Sings and Placards must be mounted where visible in the area of the gate. A minimum of two (2) Warning Placards shall be mounted. (One on each side of the gate).

PLAN OF INSTALLATION

Plan of Installation:

The gate must be installed in a location so that enough clearance is supplied between the gate and adjacent structures when opening and closing to reduce the risk of entrapment.

Swinging gates shall not open into public access areas.

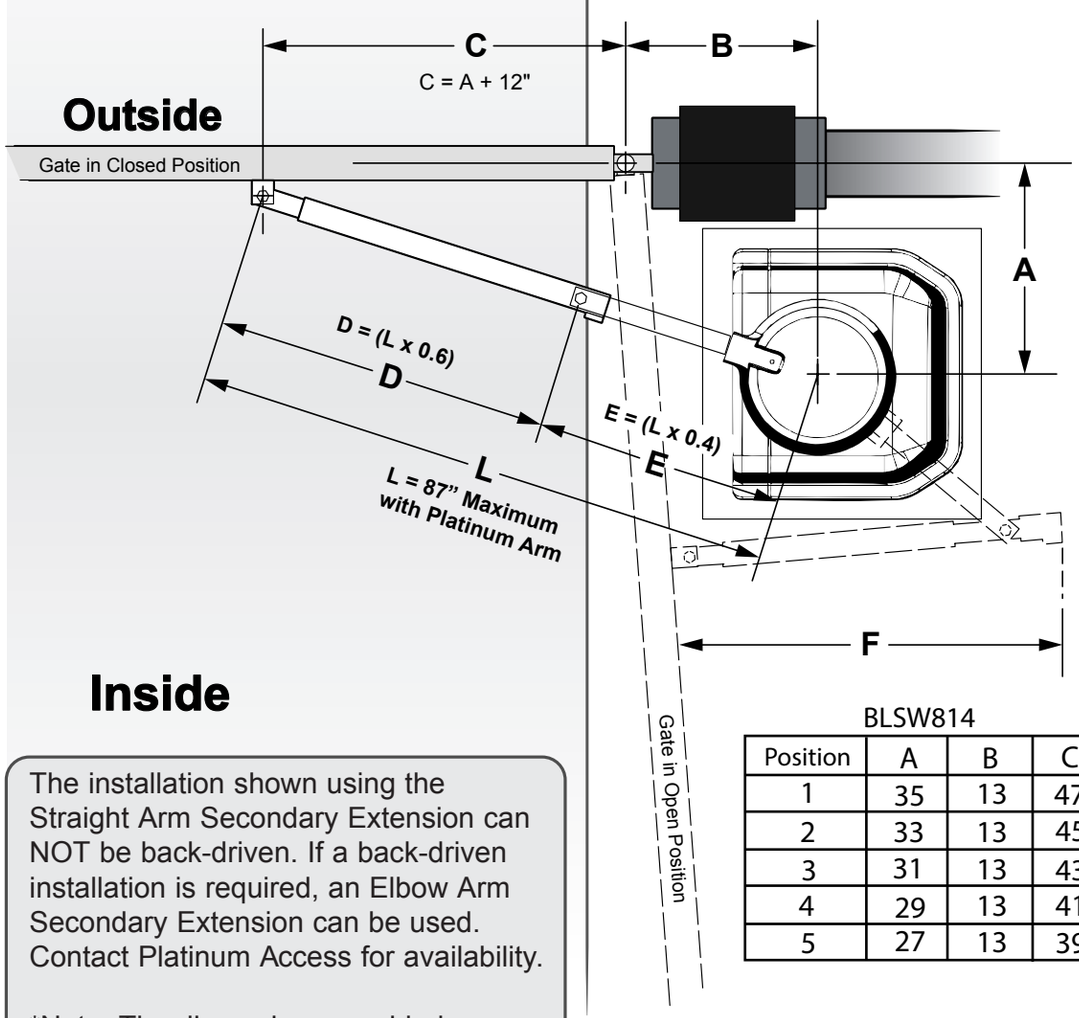

BLSW814

Position	A	B	C
1	35	13	47
2	33	13	45
3	31	13	43
4	29	13	41
5	27	13	39

The installation shown using the Straight Arm Secondary Extension can NOT be back-driven. If a back-driven installation is required, an Elbow Arm Secondary Extension can be used. Contact Platinum Access for availability.

*Note: The dimensions provided are just a guideline. Each site may have different geometries or possibilities of installation. The key for installation is to have "D" longer than "E" and to adjust the arms such that the arm is straight at the closed position.

COMPACT INSTALLATION

Position	A	B	C	D	E
1	27	11	35	35	22

PLAN OF INSTALLATION

Plan of Installation (continued):

Concrete Pad

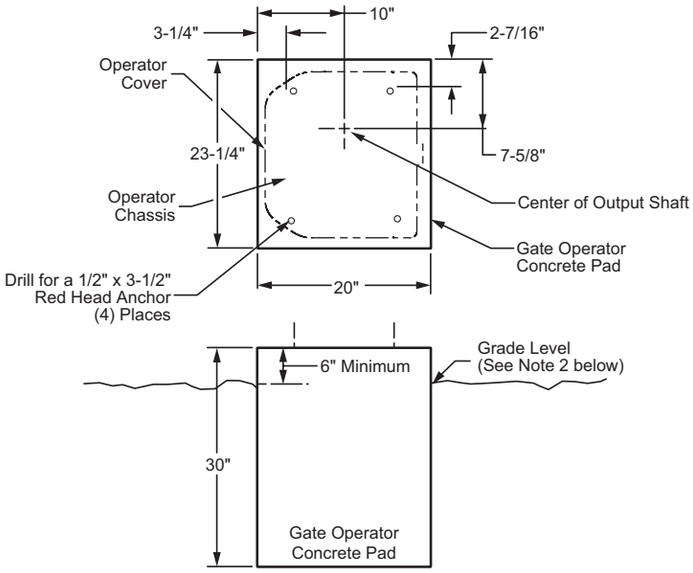

1. Follow the local building code to determine the requirement of the concrete pad.
2. We recommend the Pad measurements should be at least 28” long, 20” wide, and 24” deep to ensure the stable operation of the operator, and a minimum of 4” above level grade to avoid any flooding of the operator.
3. To support the weight of the gate, we recommend the path of the track should be at least 10” wide and 6” deep.

Arm Assembly

Platinum Access Systems can supply an Elbow Arm Secondary Extension (Part # PA-EA100) to make the unit backdrivable. Contact Platinum Access for availability.

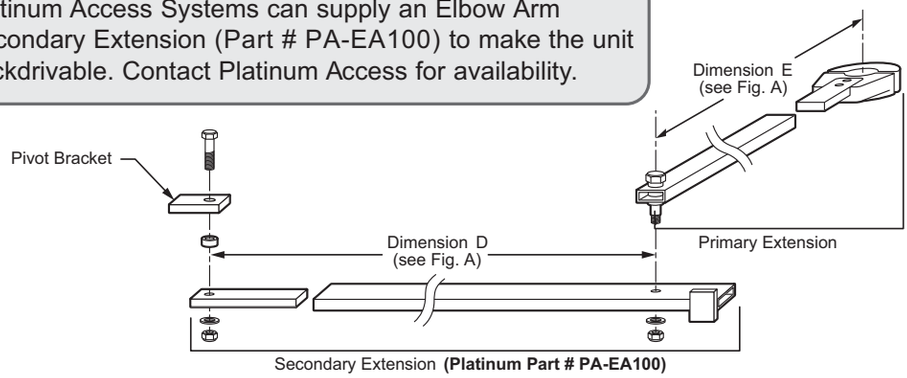

PLAN OF INSTALLATION

Plan of Installation (continued):

CAUTION

Do not weld the bar or backing plate to only a few gate posts. Mounting bar must be welded to a frame segment that runs the full length of the gate to prevent damage to the gate operator.

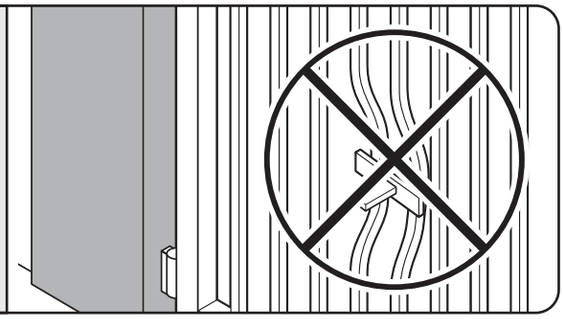

STEP 1

Release the clutch (see pg. 7) and cut the extension arms according to the desired plan of installation (Figure A on pg. 12).

Note: Leave extra material when cutting the extension arms to allow for any added adjustment.

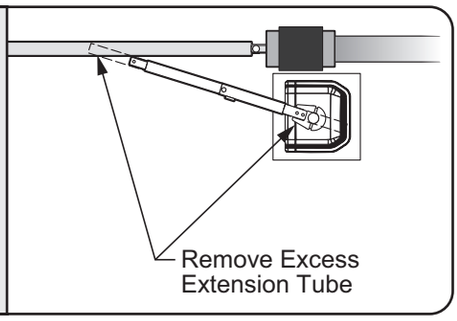

STEP 2

With the gate in the closed position, place the pieces of the articulated arm. Make certain the dimensions correspond to the plan of installation. To aid in the pre-installation process, use C-clamps or tack-weld pieces.

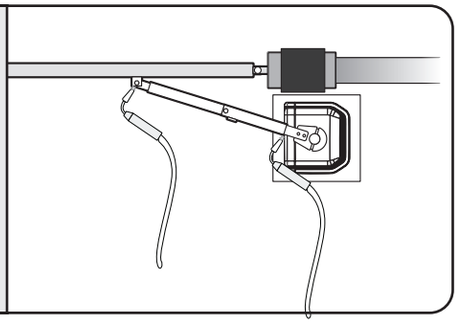

STEP 3

With the clutch released, manually position the gate from the completely open to the completely closed position. Confirm that the gate/arm combination provides the desired operation and that the arm does not bind in its movement (especially in the open position).

Note: The speed of the gate operation is based on the total travel angle of the primary arm on the output shaft. The smaller the angle, the quicker the gate opens and closes.

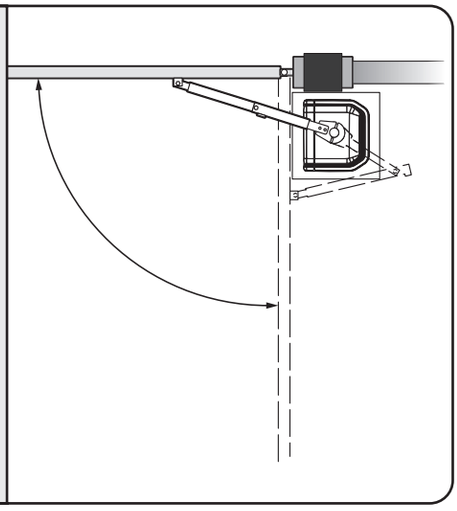

PLAN OF INSTALLATION

Plan of Installation (continued):

STEP 4

Once satisfied with the arrangement of the articulated arm and bracket, weld all pieces securely.

Paint the arm to preserve it from rusting.

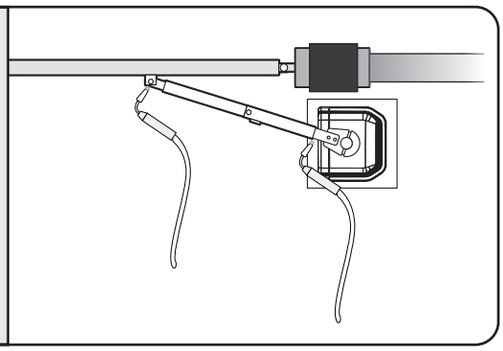

STEP 5

Upon test of the installation, loosen the Arm Clamp and rotate it until it lines up with the notches in the Output Key.

Insert the Output Key.

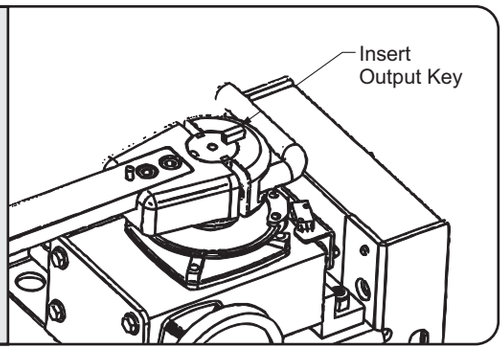

STEP 6

Check the Arm Clamp adjustment. The Arm Clamp is shipped factory adjusted. The Arm Clamp must be tight enough to prevent slippage in normal operation.

Check the tightness of the Arm Clamp:

A. Remove the Output Key from the Arm Clamp.

B. Attempt to manually move the gate.

C. If slippage occurs:

1. Loosen the Locking Handle
2. Tighten the opposite bolt.
3. Tighten the Locking Handle
4. Check the tightness of the Arm Clamp again.

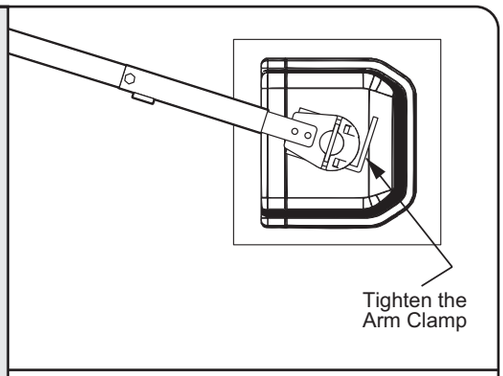

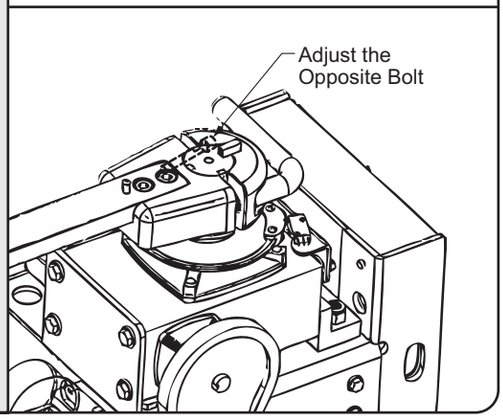

Installation: ElecTrical

WARNING – Verify the installation first to make sure everything is correct before connecting the power cable to the board. USE MIN. 14 AWG WIRE. FOLLOW ALL LOCAL ELECTRICAL CODES.

To help protect the equipment from lightning and power surges and to protect persons from shock hazard the Operator must be grounded. The earth ground rod must be located within 3 feet from the gate operator. Use the proper type earth ground rod for your local area. The ground wire must be a single, whole piece of wire. Never splice two wires for the ground wire. If you cut the ground wire too short, break it, or destroy its integrity, replace it with a single wire length. Prevent unnecessary turns or loops in ground wires.

The gate operator and the battery charger require a single phase AC line to operate.

1. Turn off the breaker for the circuit you are using.
2. Select the proper voltage on the power board.
3. Connect the incoming power wires to the proper terminals.
4. Turn on the breaker and check that AC ON and CHARGE LED are lit.

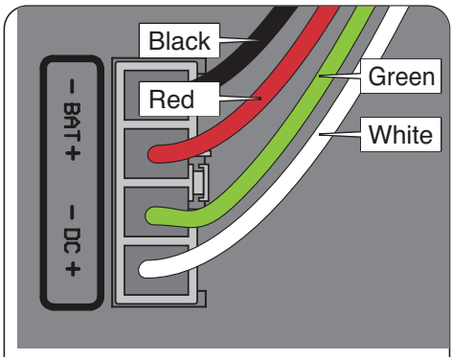

Power Harness

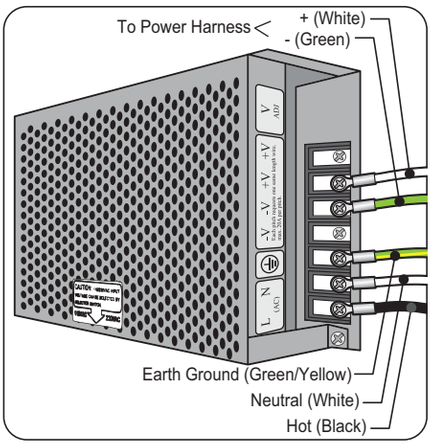

The power receptacle has been left unconnected till the installer decides what voltage to use.
Connect to 120VAC only

Installation: ElecTrical

Connecting Power:

Connect the LIMIT harness to J14, and MOTOR CTL harness to J4.
On the OPEN DIR switch:
Select “RIGHT” to open right.
Select “LEFT” to open left.

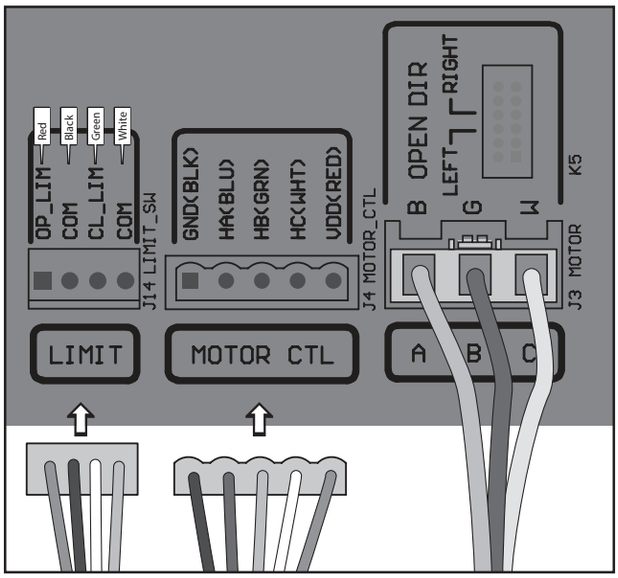

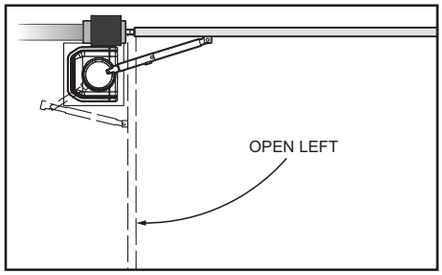

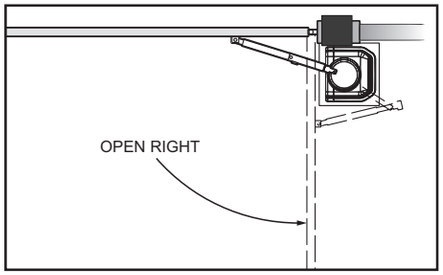

Installation: LIMIT SWITCH SET-UP

Limit Switch Set-Up:

STEP 7

A. Loosen the screws on the Limit Switch Cams.
B. Remount the articulated arm, making sure the cam wheel pin is engaged with the clutch.
C. Move the gate manually to the closed position.
D. Move the Limit Switch Cams on the Cam Wheel to actuate each limit switch.

Gate Opens to Right	
Left Limit Switch	Open limit
Right Limit Switch	Close limit

Gate Opens to Left	
Left Limit Switch	Close limit
Right Limit Switch	Open limit

E. Slightly tighten the screw on the Limit Switch Cam.
F. Move the gate manually to the open position. Repeat steps a, b and c for the other cam.
G. Run the unit 2 full cycles without interruption (from limit to limit) to execute a “Learn Cycle.”

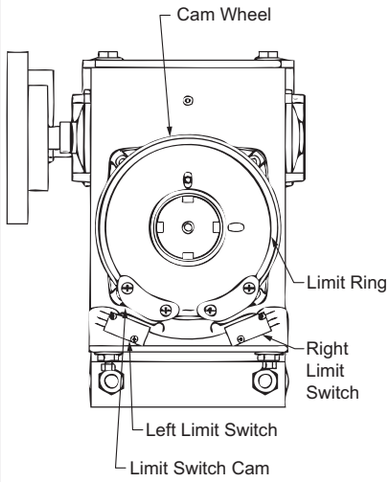

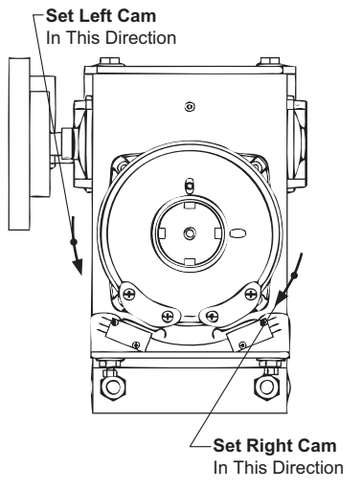

STEP 8

Install the Cover by carefully slipping the front half over the Limit Switches and Cam Wheel., then fitting the back cover in place. Latch the hasps on both sides of the Cover.

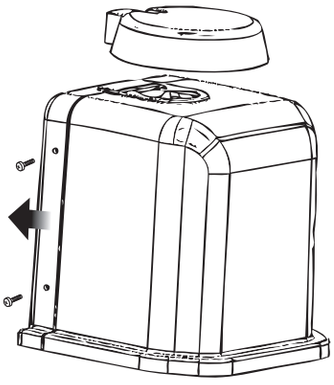

Installation: LIMIT SWITCH SET-UP

Limit Switch Set-Up (continued):

OPENING/CLOSING SETUP

1. Setup the limit switches manually at the desired open and close position.

2. Allow the gate operator to run a full open and close cycle (from limit to limit) without interruption.
Note: During the first full open and close cycle, the gate operator will run at low speed. During subsequent cycles, the gate operator will speed up at start and slow down prior to reaching its limits.

3. Verify that the gate opens and closes to the desired position.

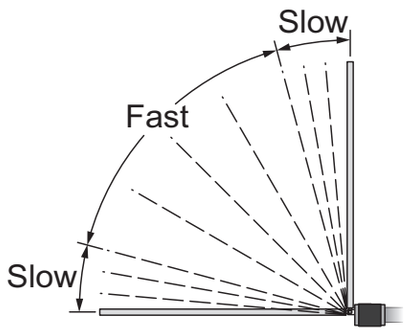

Note: When slightly adjusting the open or close limit position(s), the operator will automatically adapt the changes. When relearning is needed, push and hold "RESET" button for 3 second, the machine will return to original state, and be ready for learning.

LIMIT SWITCH CONNECTIONS

The Limit Switches are pre-wired. Should the wires become disconnected, use this diagram to reconnect them.

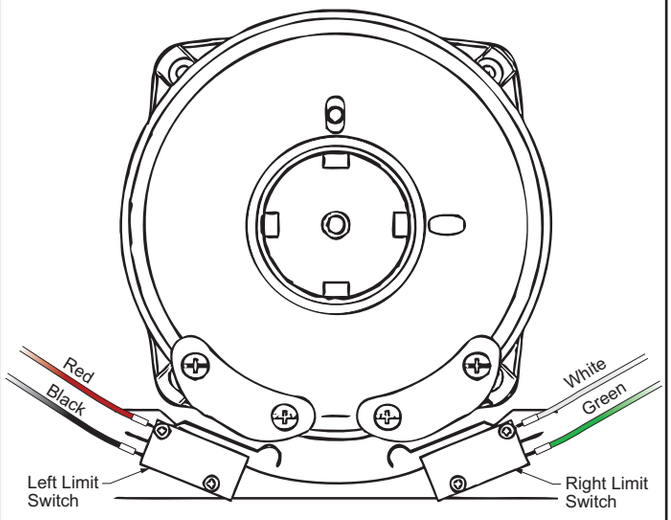

Installation: Primary/Secondary Connections

Electrical Installation - Primary/Secondary:

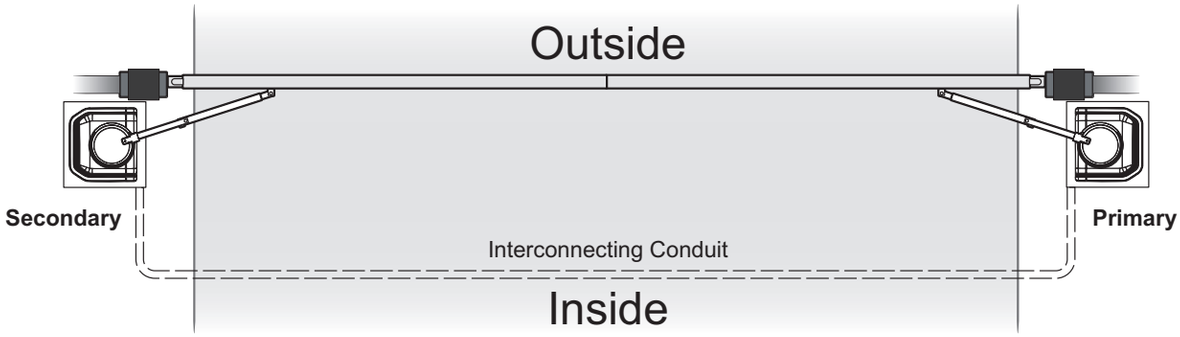

Caution – Do not run Primary/Secondary communication cable (Model #PA-PSC100) in the same conduit as the power supply (120-220V) cable.

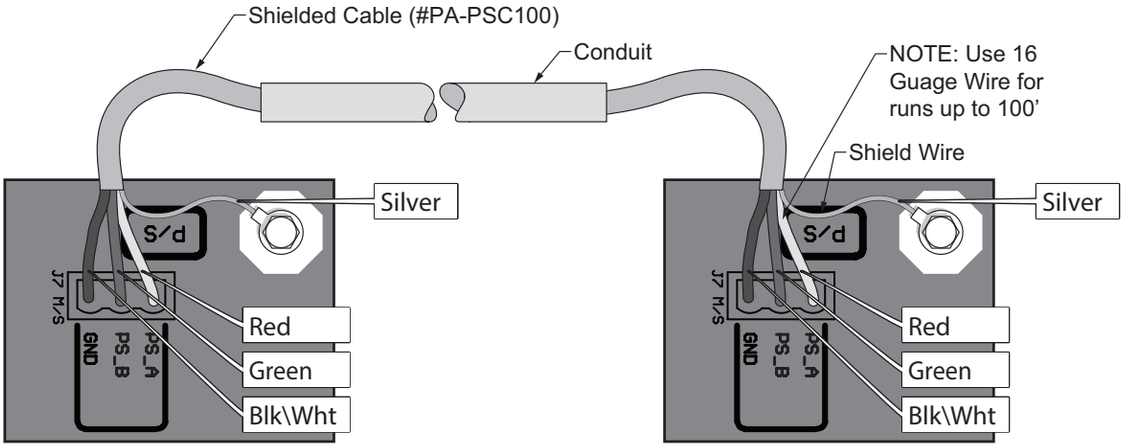

The control board provides a connector for Primary/Secondary connectivity. This connector will allow synchronized operation with a second gate operator.

Note: It is recommended to connected all external devices and set timer on the Primary unit. Timer setting on Secondary unit will be ignored.

All accessories must be connected to the primary operator.

Installation: Loop Rack

Loop Rack Installation:

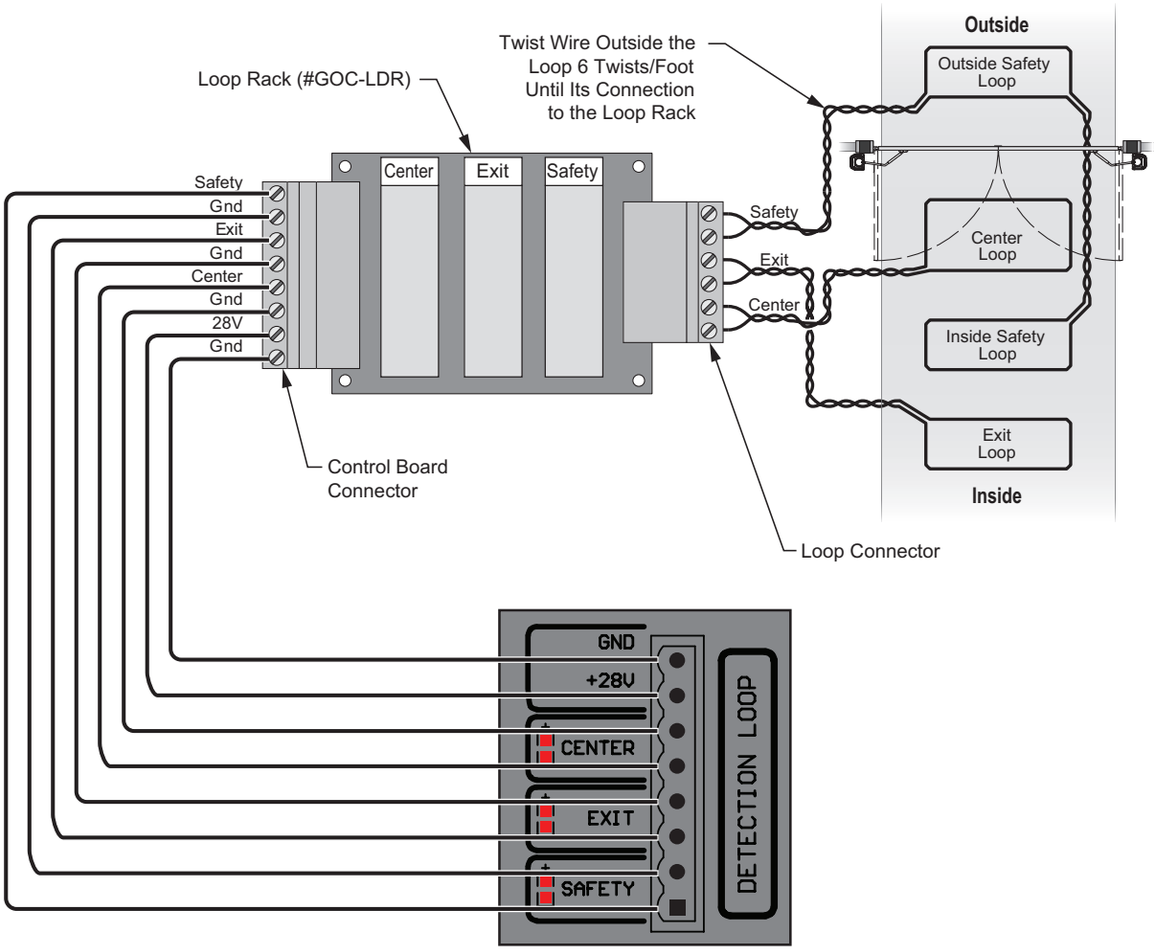

Installation: Accessory Connections

Accessory Connections:

To decrease the possibility of vehicle entrapment on the gate, vehicle loop detectors need to be installed. The edge sensor and the photo-electric beam can be used for secondary entrapment protection on every installation to prevent pedestrian or animal entrapment. These accessories must be UL325 compliant devices.

Safety Connections

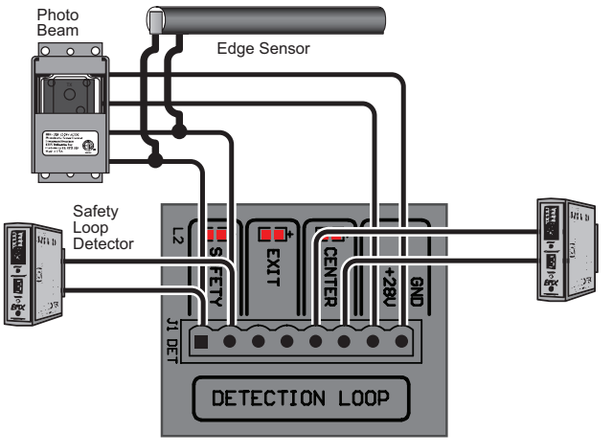

Open Commands

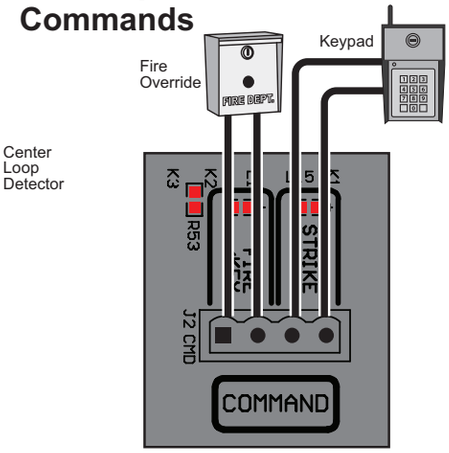

Reopen Photo Beam

Note: Installing the photo beam in this way, allows the gate to re-open all the way upon obstruction of the photo-beam.

The optional PBD connector provides a controlled power supply for Photo Beam. The power will be turned off when gate is in close position to save battery.

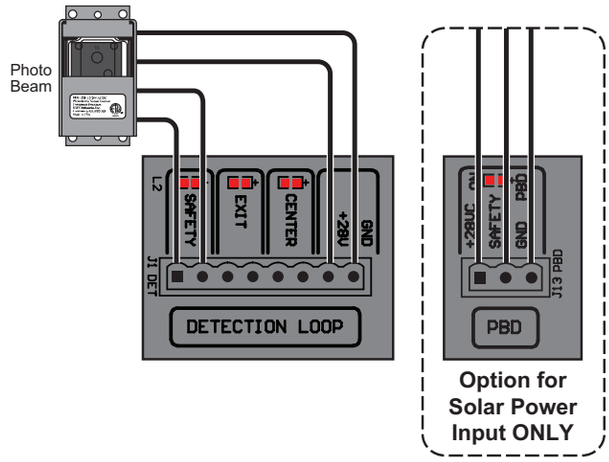

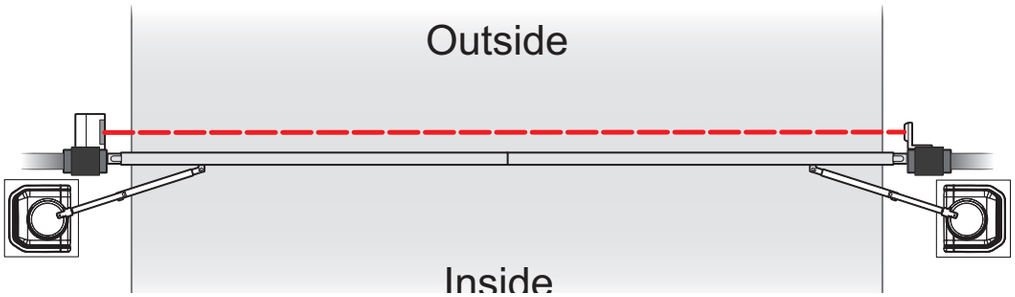

Installation: Accessory Connections

ACCESSORY CONNECTIONS (continued):

Radio Receiver

Need to verify the proper connections before connecting the Radio Receiver. The maximum voltage that the control board / battery can provide is about 28V for external accessories. If there is an electrical shot in the power to the accessories, the control board will protect itself by shutting down and will remain shut down until the short is fixed.

Two modes of operation that a radio receiver can control the gate:

Open-Close

By having the radio receiver connected as illustrated and with the Timer OFF:

Every command of the radio transmitter will control the gate as follow:

A. First command opens the gate
B. Second command CLOSE the gate if at open position
C. Third command OPEN the gate
D. Any subsequent commands will continue in the same order to control the gate.

This type of configuration is not recommended for a commercial installations.

Open Only

By having the radio receiver connected as illustrated and with the Timer ON:

Each command of the radio transmitter is ALWAYS AN OPEN COMMAND to the gate.

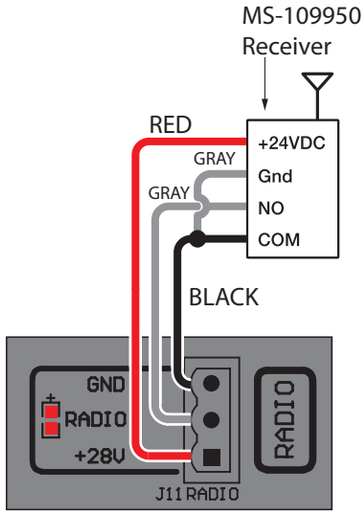

Linear MS-109950
Installation Diagram

Installation: Accessory Connections

Accessory Connections (continued):

Solenoid Connection

The solenoid power connection must be provided an external power source. This will prevent damage to the battery in the event of a line power failure.

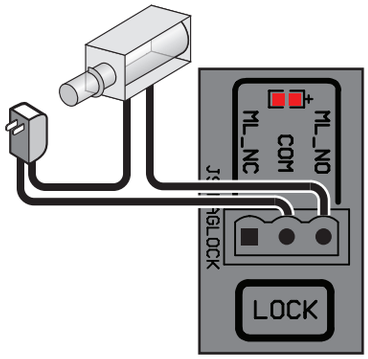

Guard Station

This will control the gate operator to Open, Stop, and Close the gate. The switches for Open and Close must be normally open type. The switch for Stop must be normally close type. They all can be using the same common ground. The control switch box should be within sight of the gate, out of reach of children, and away from moving parts of the gate.

If no guard station or STOP switch is installed, a jumper must be inserted between “STOP(NC)” and “GND” pins.

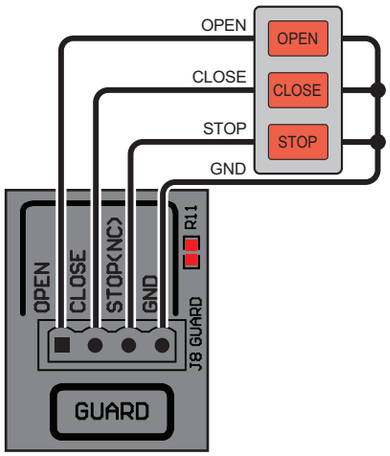

Installation: Accessory Connections

ACCESSORY CONNECTIONS (continued):

Locks

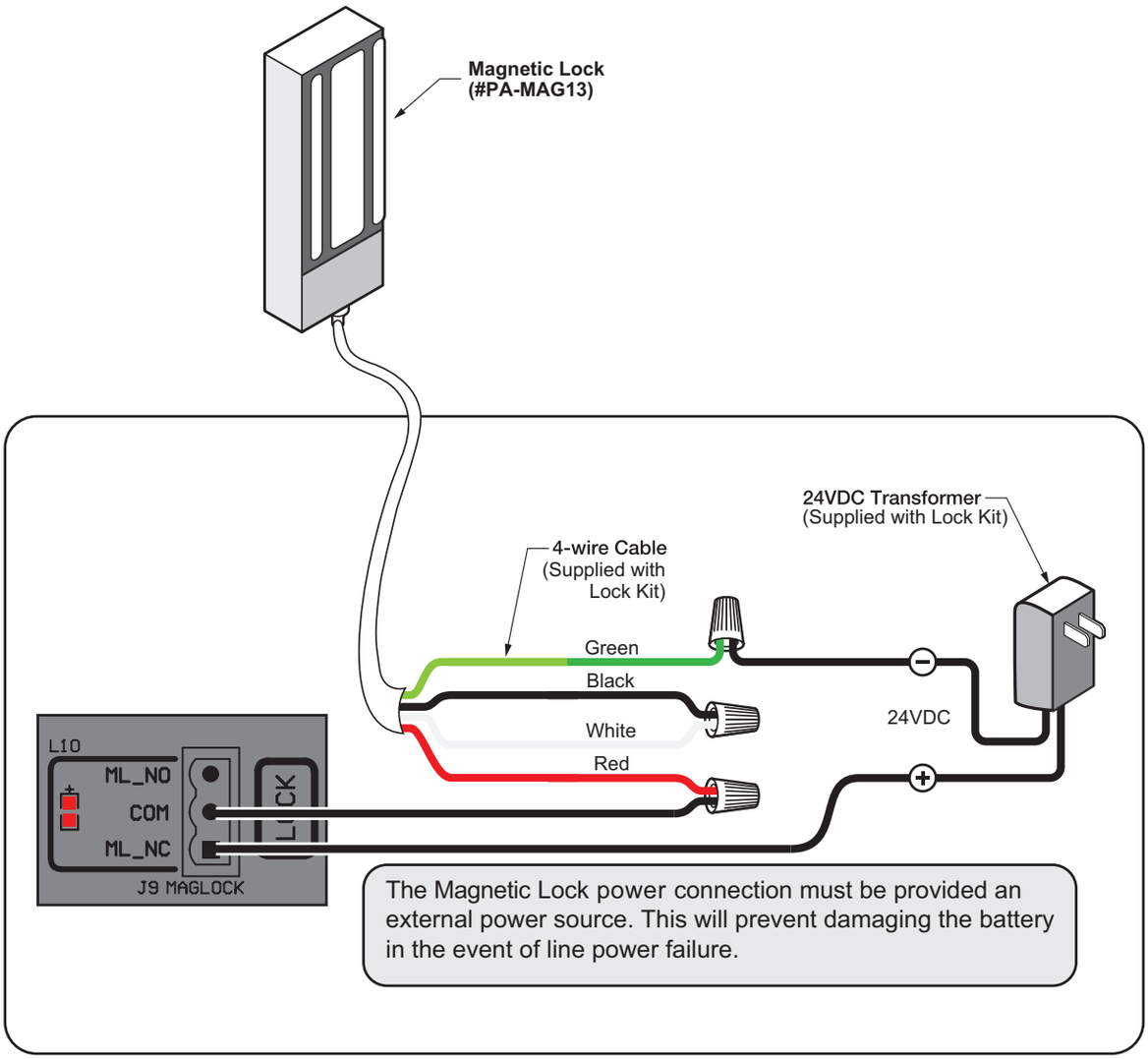

OPTIONAL ACCESSORY- part # (PA-MAG13).

Installation: Selectable Features

PRIMARY/SECONDARY OPERATOR SELECT:

Primary/Secondary

To set the operator to Secondary: Select the DIP switch to SECONDARY position. Recycle power to make the new setting effective.

To set the operator to Primary: Select the DIP switch to PRIMARY position. Recycle power to make the new setting effective.

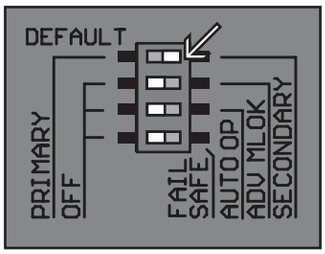

ADVANCING LOCK SELECT:

ADV MLOK

To set the maglock to be engaged before the gate reaches the close or open position: Select the DIP switch to ADV MLOK position.

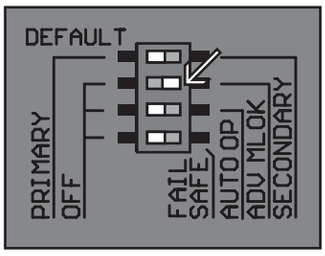

OPEN ON POWER FAIL:

The Auto-Open feature in Platinum Access Systems Gate Operators enables the following functionality in the event of power failure:

a. Open the gate in case of power failure (120 or 220 VAC).
b. Keep the gate at the open position as long as the there is no power.
c. Resume to normal operation when the power has been restored.

All accessories and safety devices are functional. The only function disabled is the close command.

Auto-Open

To enable the Auto-Open feature: Select the DIP switch to AUTO OP position.

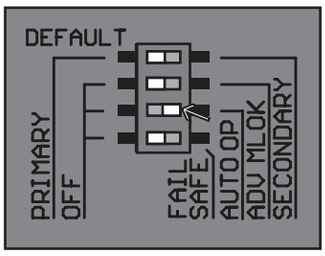

Installation: Selectable Features

CLOSE TIMER:

Close Timer

The Close Timer will close the gate a set time after the vehicle clears the gate area. This is adjustable from 3 to 60 seconds.

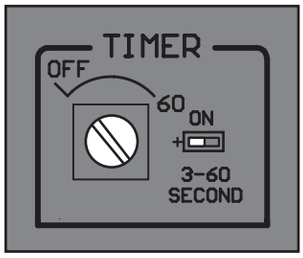

LEAF DELAY:

Leaf Delay

An Overlap Delay has been provided for biparting gates that have an emblem or maglock for example. It will provide up to a 3 second delay on primary or secondary operator.

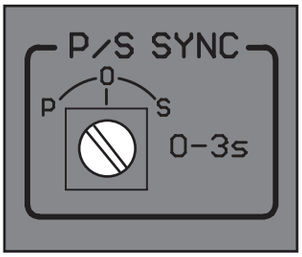

INSTANT REVERSING SENSOR:

Instant Reversing Sensor

The Obstruction Sensor needs to be adjusted to compensate for the installation and gate weight. The overload adjustment is provided to set the gate sensitivity.

a) If the gate reverses by itself or stops in midcycle, it is too sensitive.
b) If the gate hits an object and does not reverse or stop, it is not sensitive enough.
c) Clockwise increases sensitivity, counter-clockwise decreases sensitivity.

Test and adjust for proper reversing pressure

(Note: When unit alarms, push "STOP" or "RESET" button will clear the alarm)

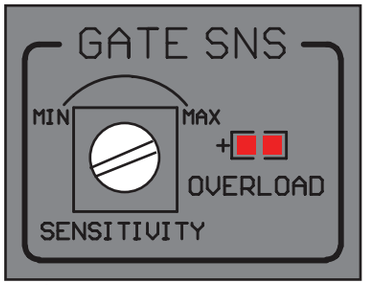

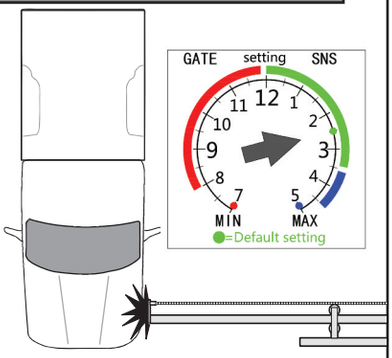

Installation: Selectable Features

FAIL SAFE/SECURE:

Fail Safe/Secure

On = Fail Safe
Off = Fail Secure

Fail/Safety (Input)	Battery Detection	AC Detection	Output
ON	Normal	Normal	Secure
ON	Normal	OFF	Fail Safe
ON	Low/OFF	Normal	Fail Safe
ON	Low/OFF	OFF	Fail Safe
OFF	Normal	Normal	Secure
OFF	Normal	OFF	Fail Secure
OFF	Low/OFF	Normal	Fail Secure
OFF	Low	OFF	Fail Secure

Note: When the output is "Fail Safe", there is less resistance to push the gate open manually.

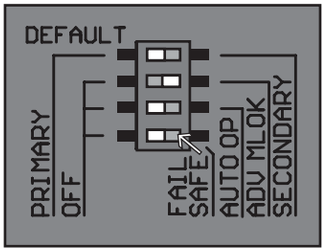

SOLAR INSTALLATION:

Step 1

A 24V solar panel or two 12V solar panels with minimum 80 watts capacity, Maximum Power Voltage (VPM) > 31V and Open Circuit Voltage (VOC) >38V is required.

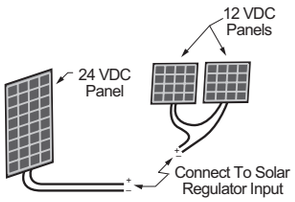

Step 2

Connect the solar panel cables to the Solar socket on the board.

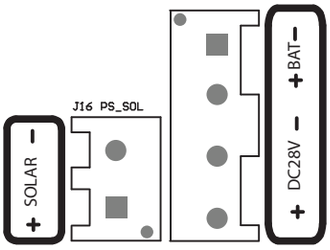

MAINTENANCE

- The gate system MUST be maintained. Have a qualified service person inspect, repair or adjust your system if any unusual behavior is observed or suspected.
- Severe or high cycle usage will require more frequent maintenance checks.
- Remove the Power Harness from the Control Board.
- Keep the gate area clean to insure proper operation.
- If not clean, servicing provides a good time to make it so, the operator should be cleaned up and the area around the operator should be clear of debris.
- Clean and lubricate the gate hinges. Make sure hinges are working smoothly.
- Check that all mounting hardware of the gate operator is properly tightened.
- Ensure that the gate moves freely.
- Check for corroded parts and replace if necessary.
- Check the battery for the following:

  Battery connections must be free of corrosion.

  Battery voltage must be 26 VDC minimum, (fully charged battery).
- Reconnect the Power Harness for the Control Board.
- Check and confirm the proper operation of all safety devices.
- Check and confirm the operation of all installed accessories.
- Check and confirm the operation of the manual release and selected features.
- Check the incoming line voltage and confirm it is within 10% of its rating (115 or 230 volts).
- Verify battery backup functionally by turning off the power source (115 VAC and 230 VAC). Don't forget to restore power after testing.

Gate Operator Trouble Shooting Procedure

1. Motor Does Not Run

a. AC/SOL LED is OFF:
-- Check battery breaker switch to make sure it is ON.
-- Check the motor breaker to make sure it is turned to ON position.
-- Make sure the AC Switch is ON and if necessary use a multi meter to check the input voltage to make sure it is 115VAC/220VAC.

b. AC/SOL LED is ON:
-- Check the motor breaker to make sure it is turned to ON position.
-- Check the motor wire connection to make sure every wire is firmly connected inside the terminal connector.
-- Check limit switch wires to make sure the close limit switch wire is connected to Common/GND, and the other wire is connect to the normal close position.
-- Disconnect all the external accessories first. Then check it to see if the motor can run. Some time the Photo beam sensor, edge sensor, loop detector, or other safety sensor prevents the motor from running.
-- Turn OFF the AC switch, Turn OFF the battery breaker. Wait for 30 seconds. Then turn the bat tery breaker and AC switch ON. Then reset the operator(s). This is a hard reset.
-- If you use the Multi Code 1090 receiver, please make sure the connection is correct. Connect from the receiver common pin to operator main board +28Vpin, and connect the receiver 24V pin to operator main board GND pin. If your connection is wrong, it can freeze the operator. Next turn the AC switch and battery breaker switch OFF. Wait for 30 seconds. Then turn these two switches back ON. Then reset the operator.

c. Power Failure:
-- Check battery connection, and check each battery voltage (12VDC) to make sure the battery is still at good condition.

d. Overload Sensor and Alarm are ON:
-- Press STOP button once to silence the alarm. Check the gate path to make sure everything is clear of obstructions. Double check to GATE SNS is set correctly. Normal SNS setting is at 2 O'clock. If needed, set sensor to 11 O'clock, 9 O'clock.

2. Problems While in Motion

a. Stops then Reverse:
-- Please check the gate path to make sure the path is clear with obstructions.
-- Double check the GATE SNS is set correctly. Normal setting is at 2 O'clock. If need, set sensor to 11 O'clock, 9 O'clock.
-- Check the gate hinge, or wheels, or other hardware to make sure everything is working nor mally.
-- Reset the gate operator to learn again.

b. Travel over the Limit Switch:
-- Check the limit switch to make sure it is good.
-- Check the limit switch wire to make sure the connection is correct.

Gate Operator Trouble Shooting Procedure

c. Does Not Close Automatically:
-- Check TIMER pot to make sure the setting is correct, or not. Normally set to 12 O'clock.
-- Check other external safe devices like Loop Detector, Photo Beam sensor, Edge Sensor, Radio to make sure none of them are activated.

3. Primary / Secondary Gate Configuration

a. Gates Open and/or Closes in Opposite Direction (Swing Gate).
-- Switch the OPEN DIR LEFT/RIGHT switch to the other direction.

b. Gates Do Not Close at the Same Time (Swing Gate).
-- Check the P/S SYNC pot to make sure it set to 12 O'clock. Then press reset button to reset the operators.

c. Gates Do Not Close in Preset Order (Swing Gates).
-- Check P/S SYNC pot to make sure the setting is correct. If it is correct, press rest button to reset the operators.
-- Check DIR switch to make sure one operator is set to secondary.

d. Sometime One Gate is Much Slower than the Other Gate.
-- Please make sure that every external device only connects to the Primary gate operator. Nothing should connect to Secondary gate operator. If any input device is connected to the Secondary unit, please change it to connect to the primary unit. Then press Reset to rest the operators.

e. Gates Hit Each Other (Master/Slave Slide Gates).
-- One gate over traveled. Make sure the limit nut has set correctly.
-- Please make sure the end user never use pad lock to lock the gates together. Only maglock can be used to lock the gates. Please correct this problem then reset the operators.

4. Others

a. Gate does not open at times and Alarm is ON (Swing Gate).
-- Please make sure the arm position in set up correctly. Make sure the arm does not put a lot of pressure on the output shaft when the gate starts to open.

b. Gate(s) Do not Open or Close and Alarm is ON.
-- Please make sure the There is a 4-pin terminal plug into the J8 GUARD connector with a short wire that short GND & ST

c. Operator Makes Beeping Sound.
-- Check battery. Battery voltage is low. Please make sure the battery breaker is ON, and the battery wire connection is good, and the charge led light is ON on the main board.
-- If these steps are OK and the unit is still making the beep sound, then it is time to replace the batteries. Please replace both batteries at the same time.

Part

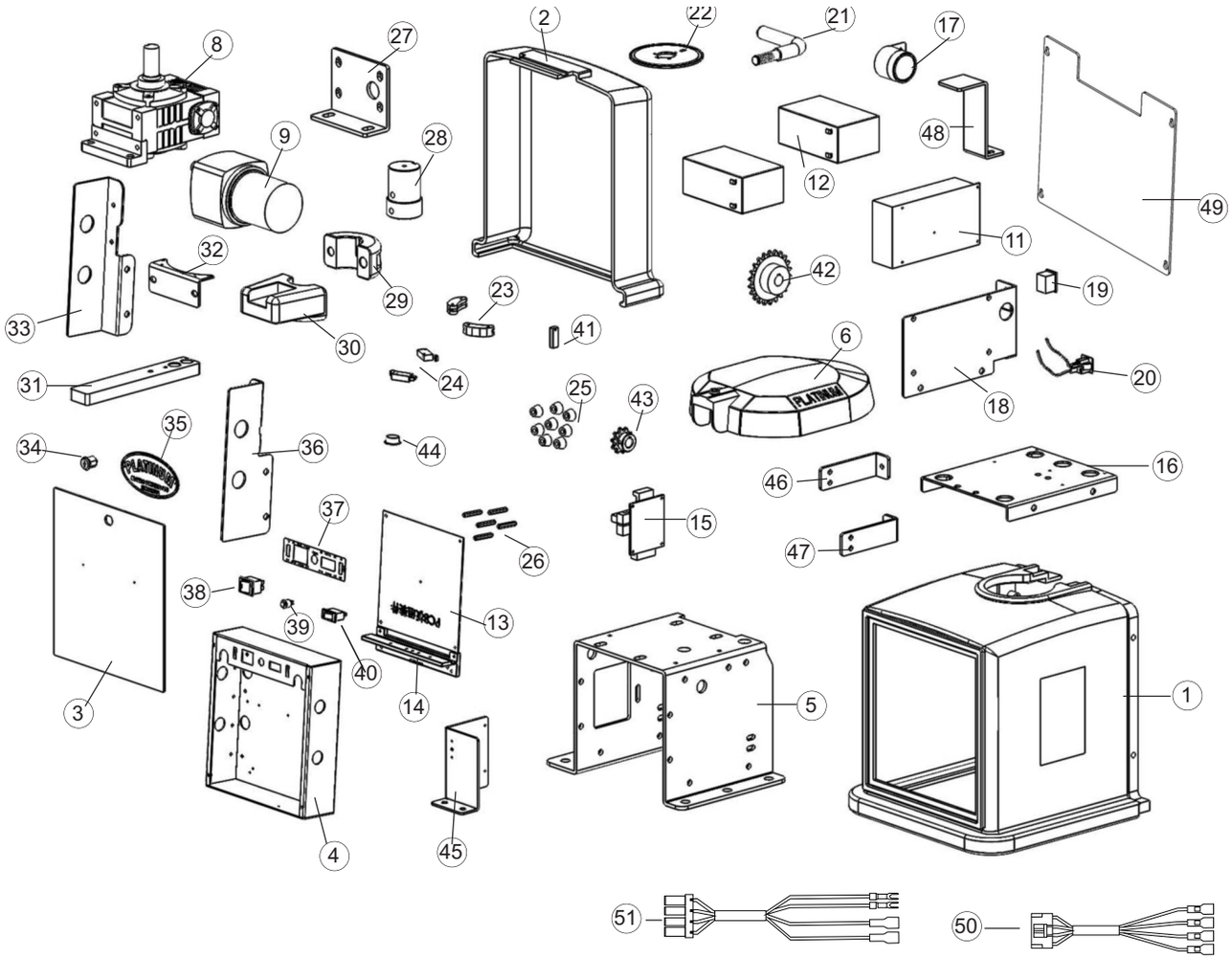

1. Front Cover
2. Rear Cover
3. Front Door
4. PCB Box
5. Chassis
6. Top Cover
7.
8. Gear Box 1:15
9. Brushless Gear Motor
10.
11. Switching Power Supply
12. 12V7AH Batteries
13. Main Board BLGOC-2200
14. Heatsink
15. Loop Board
16. Battery Base
17. Alarm
18. Switching Power Supply Bracket
19. AC Switch
20. AC Power Outlet
21. L Handle
22. Limit Cam Holder Plate
23. Limit Cam
24. Limit Switch
25. Rubber Feet
26. Hex AI Standoff
27. Gear Box Bracket
28. Output Shaft
29. Clutch Rear
30. Clutch Front
31. Clutch Arm
32. Limit Switch Holder
33. PCB Box Bracket Left
34. Lock
35. Platinum Logo
36. PCB Box Bracket Right
37. Switch Sticker
38. Motor Breaker
39. Reset Switch
40. Battery Breaker
41. Ouput Shaft keyway
42. Sprocket 40B23, Gear Box
43. Sprocket 40B15, Motor
44. Plastic Plug
45. Battery Bracket 1
46. Rear Cover Bracket, Left
47. Rear Cover Bracket, Right
48. Battery Bracket 2
49. PCB Box Top Cover
50. Limit Switch Cable
51. Power Supply Cable

PLATINUM ACCESS SYSTEMS™

1725 E. Grevillea Court, Ontario, CA 91761
Phone: (855) 466-8686 I Fax: (909) 923-7890

www.PlatinumASI.com

© 2013 Platinum Access Systems, Inc. All Rights Reserved.