NEC

SL2100

Hardware Manual

GVT-010793-201-00 EU
ISSUE 1.0
May 2017

Copyright

NEC Corporation reserves the right to change the specifications, functions, or features at any time without notice.

NEC Corporation has prepared this document for use by its employees and customers. The information contained herein is the property of NEC Corporation and shall not be reproduced without prior written approval of NEC Corporation.

Copyright 2017

NEC Corporation

Before use

- Please read this manual carefully before operating this product and save this manual for future use.

TABLE OF CONTENTS

PRODUCT LIABILITY

Regulatory

Chapter 1 Introduction

Section 1 GENERAL INFORMATION..... 1-1

Section 2 EQUIPMENT LIST..... 1-3

2.1 Chassis/CPU and Boards For Chassis Expand..... 1-5
2.1.1 IP7WW-4KSU-C1, IP7WW-4KSU-C1 w/o C..... 1-5
2.1.2 IP7[ ]-CPU-C1/IP7[ ]-CPU-C1-A..... 1-6
2.1.3 IP7WW-EXIFB-C1 1-7
2.1.4 IP7WW-EXIFE-C1..... 1-7
2.2 Backup Battery Unit..... 1-7
2.2.1 IP4WW-Battery Box..... 1-7
2.3 Trunk/Extension/ISDN Expansion Interface Boards..... 1-7
2.3.1 IP7WW-308U-A1..... 1-7
2.3.2 IP7WW-082U-B1..... 1-8
2.3.3 IP7WW-008U-C1..... 1-8
2.3.4 IP7WW-000U-C1..... 1-8
2.3.5 IP7WW-3COIDB-C1..... 1-8
2.3.6 IP7WW-2BRIDB-C1..... 1-9
2.3.7 IP7WW-1PRIDB-C1..... 1-9
2.4 Optional Interface Boards..... 1-9
2.4.1 IP7[ ]-VOIPDB-C1 1-9
2.4.2 IP7WW-SDVMS-C1/IP7WW-SDVML-C1 1-9
2.5 Multiline Telephones and Optional Equipment 1-10
2.5.1 IP7WW-12TXH-A1 TEL..... 1-10
2.5.2 IP7WW-24TXH-A1 TEL..... 1-10
2.5.3 IP7WW-12TXH-B1 TEL..... 1-10
2.5.4 IP7WW-24TXH-B1 TEL..... 1-11
2.5.5 IP4WW-12TXH-A TEL..... 1-11
2.5.6 IP4WW-24TXH-A TEL..... 1-11
2.5.7 IP4WW-12TXH-B TEL..... 1-11
2.5.8 IP4WW-24TXH-B TEL..... 1-12
2.5.9 IP7[ ]-8IPLD-C1 TEL..... 1-12
2.5.10 IP4[ ]-24TIXH-C TEL 1-12
2.5.11 ITY-6D-1( ) (BK) TEL..... 1-13
2.5.12 ITY-8LDX-1( ) (BK) TEL..... 1-13
2.5.13 IP7WW-60D DSS-A..... 1-13
2.5.14 IP7WW-60D DSS-B..... 1-14
2.5.15 IP4WW-WALL MOUNT UNIT..... 1-14
2.5.16 Wireless Headset Adapter (WHA)..... 1-14
2.5.17 DTZ-12D-3( ) (BK)/(WH) TEL..... 1-14
2.5.18 DTZ-24D-3( ) (BK)/(WH) TEL..... 1-15
2.5.19 DCZ-60-2[ ] (BK/WH) CONSOLE..... 1-15
2.5.20 DP-D-1A/1D/HS.D503DOR-A..... 1-15

Section 3 SYSTEM CAPACITY..... 1-16
3.1 System Capacity..... 1-16
3.2 Chassis Capacity..... 1-17
3.2.1 Expandability of Trunk and Extension (without BRI/PRT)..... 1-19
3.2.2 Expandability of Trunk and Extension (with BRI)..... 1-21
3.2.3 Expandability of Trunk and Extension (with PRT)..... 1-22

Chapter 2 Installation

Section 1 INSTALLING THE MAIN & EXPANSION CHASSIS..... 2-1
1.1 Before Installing the Chassis..... 2-1
1.1.1 General Precautions..... 2-1
1.1.2 Preparations..... 2-1
1.1.3 Site Requirements..... 2-2
1.1.4 Environmental Requirements..... 2-2
1.1.5 Unpacking..... 2-2
1.2 Installing the Main Chassis (IP7[ ]-4KSU-C1)..... 2-2
1.3 CPU Board (IP7[ ]-CPU-C1)..... 2-3
1.3.1 Unpacking..... 2-3
1.3.2 Connectors Location..... 2-3
1.3.3 Installing the CPU Board (IP7[ ]-CPU-C1)..... 2-3
1.3.4 Connector and Switch..... 2-5
1.4 Chassis Dimensions..... 2-6
1.5 Wall-Mounting the Chassis..... 2-6
1.5.1 Wall Installation of Chassis..... 2-7
1.5.2 Mounting Procedure of Chassis..... 2-8
1.5.3 Wall Mounting the Chassis and the Backup Battery (IP4WW-Battery Box)..... 2-10
1.6 Rack Mounting the Chassis..... 2-12
1.7 Installing the Expansion Chassis..... 2-12
1.7.1 General..... 2-12
1.7.2 Installation of the EXIFB-C1..... 2-13
1.7.3 Installation of the EXIFE-C1..... 2-16
1.7.4 Chassis Inter-connection..... 2-18
1.8 Grounding and AC Cabling..... 2-18
1.8.1 Grounding the Chassis..... 2-19
1.8.2 AC Power Requirement..... 2-19
1.8.3 AC Power Cord..... 2-20

Section 2 INSTALLING THE EXTERNAL BACKUP BATTERY..... 2-22
2.1 General..... 2-22
2.2 Unpacking..... 2-22
2.3 Battery Box Dimensions 2-23
2.4 Battery Specifications..... 2-23
2.5 Battery Installation..... 2-23
2.6 Mounting the IP4WW-Battery Box..... 2-29
2.6.1 Floor-Mounting the IP4WW-Battery Box..... 2-29
2.6.2 Wall-Mounting the IP4WW-Battery Box..... 2-31
2.7 IP4WW-Battery Box to Chassis Connection..... 2-35
2.8 IP4WW-Battery Box Fuse Replacement..... 2-36

Section 3 INSTALLING THE EXPANSION INTERFACE BOARDS..... 2-41
3.1 General..... 2-41
3.2 Unpacking..... 2-41
3.3 Mounting the Expansion Interface Board..... 2-42
3.3.1 Slot Location..... 2-42
3.3.2 Mounting the 308U-A1/082U-B1/008U-C1/000U-C1 Boards..... 2-42
3.3.3 Mounting the 3COIDB/2BRIDB/1PRIDB Board..... 2-43
3.3.4 How to recognize the type of Trunk Daughter Board..... 2-45
3.4 Extension/Trunk Cabling..... 2-46
3.4.1 General..... 2-46
3.4.2 Cabling IP7WW-308U-A1..... 2-46
3.4.3 Cabling IP7WW-082U-B1..... 2-48
3.4.4 Cabling IP7WW-008U-C1..... 2-50
3.4.5 Cabling IP7WW-000U-C1..... 2-52
3.4.6 Cabling and Setting IP7WW-3COIDB-C1..... 2-52
3.4.7 Cabling and Setting IP7WW-2BRIDB-C1..... 2-52
3.4.8 Cabling and Setting IP7WW-1PRIDB-C1..... 2-55
3.4.9 LED Indication..... 2-57

Section 4 INSTALLING THE OPTIONAL INTERFACE BOARDS..... 2-60
4.1 VoIP Board (VOIPDB-C1) 2-60
4.1.1 General..... 2-60
4.1.2 Unpacking..... 2-60
4.1.3 Installing the VOIPDB-C1 Board..... 2-60
4.1.4 LED Indication..... 2-64
4.2 Installing the SD Card (SDVMS/SDVML)..... 2-65

Section 5 INSTALLING THE MULTILINE TELEPHONES AND OPTIONAL TERMINALS..... 2-66
5.1 Installing the Hybrid/Digital Multiline Telephones..... 2-66
5.1.1 Location of Controls..... 2-66
5.1.2 Multiline Telephone Legs Adjustment..... 2-68
5.1.3 Wall-Mounting the Multiline Telephone 2-70
5.2 Installing the IP Multiline Telephone (IP7[ ]-8IPLD-C1 TEL)..... 2-72
5.2.1 Location of Controls..... 2-72
5.2.2 System Connection..... 2-73
5.2.3 Connectiong the IP Multiline Telephone..... 2-73
5.2.4 Applying Power to the IP Multiline Telephone..... 2-73
5.2.5 IP Multiline Telephone Legs Adjustment..... 2-74
5.2.6 Wall-Mounting the IP Multiline Telephone..... 2-74
5.3 Installing the DSS Console..... 2-76
5.3.1 DSS Console Leg Adjustment..... 2-76
5.3.2 Wall-Mounting the DSS Console..... 2-78
5.4 Installing the Headset..... 2-79
5.5 Installing the Doorphone Box, Security Sensor Device (locally procure)..... 2-80
5.5.1 Wall-Mounting the Doorphone..... 2-80
5.5.2 Connecting the Doorphone/External Sensor Device..... 2-81
5.5.3 Connectors..... 2-85
5.5.4 Doorphone/Security Sensor Device Interface Specifications..... 2-86

5.6 Installing the Door Unlock Devices..... 2-86
5.7 Installing the External Paging Speaker/External MOH/BGM Sources..... 2-87
5.7.1 Connecting the Audio Equipment..... 2-87
5.7.2 External Paging Output Specifications..... 2-89
5.7.3 BGM/External MOH Source Input Specifications..... 2-89
5.8 SMDR (Station Message Detail Recording)..... 2-89
5.8.1 General..... 2-89
5.9 Wireless Headset Adapter (WHA)..... 2-90
5.9.1 Operation..... 2-90
5.9.2 General Notes..... 2-90
5.9.3 Recommended Model..... 2-93
5.10 Installing the DT430/IP4WW-12/24TXH-[ ] Multiline Terminals and options..... 2-94
5.10.1 Connecting the DT430/IP4WW-12/24TXH-[ ] Multiline Terminals and options to the SL2100 system..... 2-94
5.10.2 Special Notes..... 2-94

Chapter 3 System Start Up

Section 1 SYSTEM START UP..... 3-1
1.1 Before Starting Up the System..... 3-1
1.2 Starting Up the System..... 3-1
1.2.1 Perform a Cold Start..... 3-1
1.2.2 Perform a Hot Start..... 3-3

Section 2 PROGRAMMING MODE 3-4
2.1 Entering the Programming Mode..... 3-4
2.2 Exiting the Programming Mode..... 3-5
2.3 Saving (Backup) the Customer Data..... 3-5
2.4 Loading the Customer Data..... 3-7

Section 3 SYSTEM SHUT DOWN..... 3-8
3.1 Powering Off the System..... 3-8
3.2 Resetting the System..... 3-8

Chapter 4 Maintenance

Section 1 LITHIUM BATTERY REPLACEMENT..... 4-1
1.1 General..... 4-1
1.2 Lithium Battery Specification..... 4-1
1.3 Replacing the Lithium Battery..... 4-2

Section 2 MAIN SOFTWARE UPGRADING..... 4-5
2.1 General..... 4-5
2.2 Before Upgrading the Main Software..... 4-5
2.3 Main Software Version Confirmation..... 4-5
2.4 Upgrading the Main Software..... 4-7
2.4.1 Using SD Card..... 4-7
2.4.2 Using Web Programming..... 4-9

Section 3 LED INDICATIONS..... 4-15

Chapter 5 Specifications

Section 1 SYSTEM CAPACITY..... 5-1

Section 2 SYSTEM SPECIFICATIONS..... 5-3

2.1 General Precautions..... 5-3
2.2 Environmental Requirements..... 5-3
2.3 Operating Conditions..... 5-3
2.4 Site Requirements..... 5-3
2.5 AC Power Requirement..... 5-3
2.6 Electrical Specifications <Power Supply> (Chassis)..... 5-4
2.7 CPU..... 5-4
2.8 Traffic Capacity..... 5-4
2.9 IP Terminal Power Chart..... 5-5
2.10 IEEE802.af Class Specification..... 5-5
2.11 SLT Ring Signal Specification..... 5-5
2.12 Mechanical Specifications..... 5-5
2.13 Optional Unit Mechanical Specifications..... 5-6
2.14 Doorphone Interface Specifications..... 5-7
2.15 General Purpose/Door Unlock Relay Specifications..... 5-7
2.16 External Paging Output Specifications..... 5-7
2.17 BGM/ExMOH Source Input Specifications..... 5-7
2.18 External Sensor Device Interface Specifications..... 5-7
2.19 CPU Board LAN Port Specifications..... 5-8
2.20 Cabling Requirements 5-8
2.21 Cable Requirements..... 5-8

LIST OF TABLES

Table 1-1 Hardware Equipment List.... 1-3
Table 1-2 License Line-Up.... 1-5
Table 1-3 System Capacity.... 1-16
Table 2-1 Chassis Packing List.... 2-2
Table 2-2 CPU Packing List.... 2-3
Table 2-3 Connectors of CPU-C1.... 2-3
Table 2-4 Items on the CPU Board.... 2-5
Table 2-5 EXIFB-C1 Packing List.... 2-13
Table 2-6 Connectors of EXIFB-C1.... 2-13
Table 2-7 EXIFE-C1 Packing List.... 2-16
Table 2-8 Connectors of EXIFE-C1.... 2-17
Table 2-9 Power Requirement.... 2-19
Table 2-10 IP4WW-Battery Box Packing List.... 2-22
Table 2-11 Battery Specifications.... 2-23
Table 2-12 Expansion Board Packing List.... 2-41
Table 2-13 RJ-61 Hybrid/Analog Extension Connector Pin-Outs (J4).... 2-48
Table 2-14 RJ-61 Analog Trunk Pin-Outs (J5 (COI)).... 2-48
Table 2-15 RJ-61 Digital Connector Pin-Outs (J4 (ESI)).... 2-49
Table 2-16 RJ-61 Analog Pin-Outs (J4 (SLI)).... 2-50
Table 2-17 RJ-61 Hybrid/Analog Pin-Outs (J4).... 2-51
Table 2-18 RJ-61 CO Pin-Outs (J2).... 2-52
Table 2-19 RJ-45 BRI Pin-Outs (J2).... 2-53
Table 2-20 Switch Setting of 2BRIDB-C1.... 2-54
Table 2-21 RJ-45 PRI/T1/E1 Pin-Outs (J5).... 2-56
Table 2-22 Switch Setting of 1PRIDB-C1.... 2-56
Table 2-23 PRI/BRI LED Indications.... 2-58
Table 2-24 T1 LED Indications.... 2-58
Table 2-25 E1 LED Indications.... 2-59
Table 2-26 VOIPDB-C1 Packing List.... 2-60
Table 2-27 VOIPDB LED Indications.... 2-64
Table 2-28 Operation of VOIPDB LED Indications.... 2-65
Table 2-29 Hybrid/Digital Multiline Telephone Functions (12TXH-A1/24TXH-A1/12TXH-B1/24TXH-B1) 2-67
Table 2-30 IP Multiline Telephone Functions (8IPLD) 2-72
Table 2-31 RJ-61Doorphone/Sensor Pin-Outs (308U: HYB/SLI 6).... 2-85
Table 2-32 RJ-61Doorphone/Sensor Pin-Outs (308U: HYB/SLI 7).... 2-85
Table 2-33 RJ-61Doorphone/Sensor Pin-Outs (082U: SLI: 1-2).... 2-85
Table 2-34 Doorphone Interface Specifications.... 2-86
Table 2-35 RJ-61 Relay/Audio Pin-Outs (308U-A1: J5/082U-B1: J4).... 2-87
Table 2-36 General Purpose/Door Unlock Relay Specifications.... 2-87
Table 2-37 RJ-61 Relay/Audio Pin-Outs (308U-A1: J5/082U-B1: J4).... 2-89
Table 2-38 External Paging Output Specifications.... 2-89
Table 2-39 BGM/External MOH Source Input Specifications.... 2-89
Table 2-40 Terminal Power Factor.... 2-94
Table 2-41 Maximum Number of Terminal installed.... 2-94
Table 3-1 Start Up Method.... 3-1
Table 4-1 CPU LED Indications.... 4-15
Table 5-1 System Capacity.... 5-1
Table 5-2 Operating Conditions.... 5-3
Table 5-3 Power Requirement.... 5-3
Table 5-4 Electrical Specifications of Chassis.... 5-4

Table 5-5 IP Terminal Power Chart..... 5-5
Table 5-6 IEEE802.af Class Specification..... 5-5
Table 5-7 SLT Ring Signal Specification..... 5-5
Table 5-8 Mechanical Specifications..... 5-5
Table 5-9 Optional Unit Mechanical Specifications..... 5-6
Table 5-10 Doorphone Interface Specifications..... 5-7
Table 5-11 General Purpose/Door Unlock Relay Specifications..... 5-7
Table 5-12 External Paging Output Specifications..... 5-7
Table 5-13 BGM/External MOH Source Input Specifications..... 5-7
Table 5-14 External Sensor Device Interface Specifications..... 5-7
Table 5-15 CPU Board LAN Port Specifications..... 5-8
Table 5-16 Cable Requirements..... 5-8

LIST OF FIGURES

Figure 1-1 System Configuration..... 1-2
Figure 1-2 System Image..... 1-18
Figure 1-3 Expandability of Trunk and Extension (without BRI/PRT)..... 1-19
Figure 1-4 Expandability of Trunk and Extension (without BRI/PRT)..... 1-20
Figure 1-5 Expandability of Trunk and Extension (with BRI)..... 1-21
Figure 1-6 Expandability of Trunk and Extension (with PRI)..... 1-22
Figure 2-1 Connectors of CPU-C1..... 2-3
Figure 2-2 Location of Lithium Battery Socket..... 2-4
Figure 2-3 Inserting the Lithium Battery..... 2-4
Figure 2-4 Insert the CPU Board..... 2-5
Figure 2-5 Connector and Switch Location on the CPU Board..... 2-5
Figure 2-6 Dimension of the Chassis..... 2-6
Figure 2-7 Vertical Arrangement of Chassis 2-7
Figure 2-8 Horizontal Arrangement of Chassis..... 2-8
Figure 2-9 Wall-Mounting Template..... 2-8
Figure 2-10 Screw Positions..... 2-9
Figure 2-11 Mounting the Chassis..... 2-9
Figure 2-12 Fixing the Chassis..... 2-10
Figure 2-13 Vertical Arrangement of Chassis and Battery Boxes..... 2-11
Figure 2-14 Horizontal Arrangement of Chassis and Battery Boxes..... 2-12
Figure 2-15 Rack Mounted Chassis..... 2-12
Figure 2-16 Connectors of EXIFB-C1..... 2-13
Figure 2-17 Removing the CPU Board..... 2-14
Figure 2-18 Removing the Plastic Knockouts..... 2-14
Figure 2-19 EXIFB-C1 Board Installation..... 2-15
Figure 2-20 Insert the CPU Board..... 2-16
Figure 2-21 Connectors of EXIFE-C1..... 2-16
Figure 2-22 Insert the EXIFE-C1 Board..... 2-17
Figure 2-23 System Expansion Cabling..... 2-18
Figure 2-24 ETH Lug..... 2-19
Figure 2-25 AC Power Cord..... 2-21
Figure 2-26 Dimension of the IP4WW-Battery Box..... 2-23
Figure 2-27 Removing the Front Cover 2-24
Figure 2-28 Disconnect Battery Connection Cable..... 2-24
Figure 2-29 Batt Stopper..... 2-25
Figure 2-30 Pulling out the Battery Tray 2-25
Figure 2-31 Remove the Battery Tray Bracket 2-26
Figure 2-32 Battery Installation..... 2-26
Figure 2-33 Connecting the Battery Cables..... 2-27
Figure 2-34 Installation of Battery Tray Cover..... 2-27
Figure 2-35 Inserting the Battery Tray..... 2-28
Figure 2-36 Secure Batt Stopper Bracket..... 2-28
Figure 2-37 Connecting the Battery Connection Cable..... 2-29
Figure 2-38 Installation of Front Cover..... 2-29
Figure 2-39 Bases and Support of the Battery Box..... 2-30
Figure 2-40 Floor-Mount Spacing Guide..... 2-30
Figure 2-41 Mounting the Battery Box..... 2-31
Figure 2-42 Securing the Battery Box..... 2-31
Figure 2-43 Assemble Battery Box Base..... 2-32
Figure 2-44 Wall-Mount Spacing Guide..... 2-33
Figure 2-45 Removing the Front Cover 2-34

Figure 2-46 Mounting the Battery Box.... 2-34
Figure 2-47 Securing the Battery Box.... 2-35
Figure 2-48 Connecting Battery Cable.... 2-36
Figure 2-49 Removing the Front Cover 2-37
Figure 2-50 Disconnecting the Battery Connection Cable.... 2-37
Figure 2-51 Loosen the Fuse Unit Screw.... 2-38
Figure 2-52 Replacing the Fuse.... 2-38
Figure 2-53 Install the Fuse Unit.... 2-38
Figure 2-54 Securing the Fuse Unit.... 2-39
Figure 2-55 Connect Battery Connection Cable.... 2-39
Figure 2-56 Installation of the Front Cover.... 2-40
Figure 2-57 Slot Numbers.... 2-42
Figure 2-58 Plastic Knockouts 2-43
Figure 2-59 Mounting the Expansion Interface Board.... 2-43
Figure 2-60 Remove 082U/008U/000U.... 2-44
Figure 2-61 Plastic Knockouts on 082U/008U/000U.... 2-44
Figure 2-62 Mounting the 3COIDB/2BRIDB/1PRIDB.... 2-45
Figure 2-63 Installing the 3COIDB/2BRIDB/1PRIDB.... 2-45
Figure 2-64 How to recognize the type of Trunk Daughter Board.... 2-46
Figure 2-65 Hybrid/Analog Extension Cabling of 308U-A1.... 2-47
Figure 2-66 Analog Trunk Cabling of 308U-A1.... 2-47
Figure 2-67 Connectors of 082-B1.... 2-49
Figure 2-68 Hybrid/Analog Extension Cabling of 008U-C1.... 2-51
Figure 2-69 Connector of 3COIDB-C1.... 2-52
Figure 2-70 Connectors of 2BRIDB-C1.... 2-53
Figure 2-71 Switches Location of 2BRIDB-C1.... 2-55
Figure 2-72 Connector of 1PRIDB-C1.... 2-56
Figure 2-73 Switches Location of 1PRIDB-C1.... 2-57
Figure 2-74 Location of Status LED.... 2-57
Figure 2-75 Indication Pattern of Layer 1 on T1 Board.... 2-58
Figure 2-76 LED Indication Pattern of Layer 1 on E1 Board.... 2-59
Figure 2-77 Removing the CPU Board 2-60
Figure 2-78 Removing the Plastic Knockout.... 2-61
Figure 2-79 Installing the VOIPDB-C1 Board.... 2-62
Figure 2-80 Installing the VOIPDB-C1 and EXIFB-C1.... 2-63
Figure 2-81 Installing the CPU Board.... 2-63
Figure 2-82 Connecting a LAN Cable.... 2-64
Figure 2-83 Location of LEDs.... 2-64
Figure 2-84 Installing the SD Card.... 2-65
Figure 2-85 Hybrid Multiline Telephone (12TXH-A1/24TXH-A1).... 2-66
Figure 2-86 Digital Multiline Telephone (12TXH-B1/24TXH-B1).... 2-67
Figure 2-87 Leg Setting for Low Position.... 2-68
Figure 2-88 Cabling of Multiline Telephone.... 2-68
Figure 2-89 Leg Stopper.... 2-69
Figure 2-90 Leg Setting for High Position.... 2-69
Figure 2-91 Cabling for Wall-Mount.... 2-70
Figure 2-92 Hook-Switch Hanger.... 2-70
Figure 2-93 Wall-Mount Screw Guide.... 2-71
Figure 2-94 Mounting the Multiline Telephone.... 2-71
Figure 2-95 IP Multiline Telephone (8IPLD).... 2-72
Figure 2-96 IP Multiline Telephone Connection.... 2-73
Figure 2-97 IP Multiline Telephone Connectors.... 2-73
Figure 2-98 Put down the leg.... 2-74
Figure 2-99 Wall-Mount Unit.... 2-74

Figure 2-100 Hook-Switch Hanger..... 2-75
Figure 2-101 Wall-Mount Screw Guide..... 2-75
Figure 2-102 Mounting the IP Multiline Telephone..... 2-75
Figure 2-103 Low Position Setting..... 2-76
Figure 2-104 Cabling of DSS..... 2-76
Figure 2-105 Leg Stopper of DSS Console..... 2-77
Figure 2-106 High Position Setting..... 2-77
Figure 2-107 Cabling for Wall-Mount..... 2-78
Figure 2-108 Wall-Mount Screw Guide..... 2-78
Figure 2-109 Mounting the DSS..... 2-78
Figure 2-110 Headset Socket (4W Hybrid Multiline Telephone)..... 2-79
Figure 2-111 Headset Socket (Digital Multiline Telephone)..... 2-79
Figure 2-112 Headset Socket (IP Multiline Telephone)..... 2-80
Figure 2-113 Doorphone Box and Bracket..... 2-80
Figure 2-114 Doorphone..... 2-81
Figure 2-115 Switches Location of 308U-A1..... 2-82
Figure 2-116 Switches Location of 082U-B1..... 2-83
Figure 2-117 Connecting the Doorphone (308U-A1)..... 2-84
Figure 2-118 Connecting the Doorphone (082U-B1)..... 2-84
Figure 2-119 Connecting the Door Unlock Device (308U-A1)..... 2-86
Figure 2-120 Connecting the Door Unlock Device (082U-B1)..... 2-87
Figure 2-121 Connecting Audio Equipment (308U-A1)..... 2-88
Figure 2-122 Connecting Audio Equipment (082U-B1)..... 2-88
Figure 2-123 Connecting a PC for SMDR..... 2-90
Figure 2-124 Headset Socket (Digital Multiline Telephone)..... 2-92
Figure 2-125 Headset Socket (IP Multiline Telephone)..... 2-92
Figure 2-126 Telephone Line Socket (Digital Multiline Telephone)..... 2-93
Figure 2-127 Telephone Line Socket (IP Multiline Telephone)..... 2-93
Figure 3-1 Power Switch Location..... 3-2
Figure 3-2 ALM LED and RUN LED Location..... 3-2
Figure 3-3 Display Indication (Idle) (12TXH/24TXH-A1)..... 3-3
Figure 3-4 Display Indication (Idle) (12TXH/24TXH-B1)..... 3-3
Figure 3-5 Entering Programming Mode Display 1 (12TXH/24TXH-A1)..... 3-4
Figure 3-6 Entering Programming Mode Display 1 (12TXH/24TXH-B1)..... 3-4
Figure 3-7 Entering Programming Mode Display 2 (12TXH/24TXH-A1)..... 3-4
Figure 3-8 Entering Programming Mode Display 2 (12TXH/24TXH-B1)..... 3-4
Figure 3-9 Exiting the Programming Mode Display 1 (12TXH/24TXH-A1)..... 3-5
Figure 3-10 Exiting the Programming Mode Display 1 (12TXH/24TXH-B1)..... 3-5
Figure 3-11 Exiting the Programming Mode Display 1 (12TXH/24TXH-A1)..... 3-5
Figure 3-12 Exiting Programming Mode Display 2 (12TXH/24TXH-B1)..... 3-5
Figure 3-13 Inserting the SD Card..... 3-6
Figure 3-14 PRG90-03 Display (12TXH/24TXH-A1)..... 3-6
Figure 3-15 PRG90-03 Display (12TXH/24TXH-B1)..... 3-6
Figure 3-16 PRG90-04 Display (12TXH/24TXH-A1)..... 3-6
Figure 3-17 PRG90-04 Display (12TXH/24TXH-B1)..... 3-6
Figure 3-18 Inserting the SD card..... 3-7
Figure 3-19 PRG90-04 Display (12TXH/24TXH-A1)..... 3-7
Figure 3-20 PRG90-04 Display (12TXH/24TXH-B1)..... 3-7
Figure 3-21 Next PRG Display (12TXH/24TXH-A1)..... 3-7
Figure 3-22 Next PRG Display (12TXH/24TXH-B1)..... 3-7
Figure 3-23 Power Switch Location..... 3-8
Figure 4-1 Warning of Low Battery (12TXH/24TXH-A1)..... 4-1
Figure 4-2 Warning of Low Battery (12TXH/24TXH-B1)..... 4-1
Figure 4-3 Removing the CPU Board..... 4-2

Figure 4-4 Location of Lithium Battery Socket..... 4-3
Figure 4-5 Removing the Lithium Battery..... 4-3
Figure 4-6 Inserting the Lithium Battery..... 4-3
Figure 4-7 Installing the CPU Board..... 4-4
Figure 4-8 Display of Multiline Telephone (12TXH/24TXH-A1)..... 4-5
Figure 4-9 Display of Multiline Telephone (12TXH/24TXH-B1)..... 4-5
Figure 4-10 Insert the SD card..... 4-7
Figure 4-11 Push in and hold the LOAD button..... 4-8
Figure 4-12 Status LED..... 4-8
Figure 4-13 Remove the SD card..... 4-8
Figure 4-14 Preparation of Web Programming..... 4-9
Figure 4-15 WebPro Login Screen..... 4-10
Figure 4-16 WebPro Home Screen..... 4-10
Figure 4-17 Session Management Screen..... 4-11
Figure 4-18 Software Update Screen..... 4-11
Figure 4-19 Select the “Immediately Reset”..... 4-12
Figure 4-20 Confirmation Message..... 4-12
Figure 4-21 4-13
Figure 4-22 Cancel Update Screen..... 4-13
Figure 4-23 4-14
Figure 4-24 Location of the LEDs on the CPU Board..... 4-15

MEMO

PRODUCT LIABILITY

USING THE EQUIPMENT SAFELY

The following safety information describes how to avoid injuries while working with the equipment and how to prevent damage to the equipment. Learn the meaning of the following symbols and then read this section carefully before using the equipment.

SYMBOL	DESCRIPTION
DANGER	Incorrect use of the equipment may cause personal injury or death.
WARNING	Incorrect use of the equipment may cause personal injury or a serious system fault.
CAUTION	Incorrect use of the equipment may limit the system performance or cause the system to fail.
The telephone system can only be used in NEC-designated countries. If a system-down, malfunction, defect or external factor such as an electrical failure indirectly causes a loss of profit, the company (or affiliates) will not be held responsible. The goal is to produce a comprehensive and accurate manual. However, if errors or omissions are found in this manual, please notify NEC Corporation. If the system requires installation or repair, contact the dealer or its service technician. Carefully read all the manuals that relate to the system.	

SAFETY CONSIDERATIONS

The following describes the safety considerations that must be observed before using the system, the powerrelated equipment and the peripheral equipment, such as consoles, the Main Distribution Frame (MDF), telephones, PCs, printers, etc.

DANGER	
	If the system emits smoke or a burning, acrid odor, immediately turn off the system power. Operating the system in this state might cause a fire, an electrical shock, or a system failure. After turning off the power and confirming that the smoke has disappeared, contact the dealer.
	If any equipment, such as the system, the main power source, a cabinet or peripheral equipment tips over, turn off the power and contact the dealer.

DANGER	
	System knockout panels are only allowed to be cut using side cutters. Box cutter/knife is not allowed to be used.
	If liquid reaches the inside of the system or the main power source, turn off the power. Operating the system in this state might cause a fire, an electrical shock, or a system failure.
PWR	Do not touch the internal parts of the main power source to disassemble or configure it. This action may cause a fire, an electrical shock or a system failure. NEC Corporation does not take any responsibility for disassembled or reconfigured equipment.
	Do not put any container objects (such as a vase or a cup) on the main power source or any peripheral equipment. It might cause a fire, an electrical shock or a system failure.
OK?	Be sure to use cables designated by NEC or cables attached to the equipment. If cables are not designated particularly, choose cables with considering safety and transmission performance carefully. Ask the dealer or your local agency if needed.
	Do not tamper with, modify, forcefully bend, forcefully remove or twist an electrical cord or any wiring to or from the system, the main power source or any peripheral equipment. It might cause a fire, an electrical shock, or a system failure. If the wiring is damaged, contact the dealer.
dust	Correctly insert all of the electrical plugs into the electrical outlets. Before inserting a plug into an electrical outlet, ensure that there is no dust on the plug's blades. If there is dust on a blade, it might cause a fire.
PWR	Do not use power other than the power that was designated for the system when it was installed.
PWR	Do not attempt to repair or move the main power source without assistance from the dealer.
	Do not put any metal or combustible objects into a vent of the system, the main power source, or any peripheral equipment. Operating the system in this state might cause a fire, an electrical shock, or a system failure. If this occurs, turn off the power and contact the dealer.
	Be careful when using any peripheral equipment's Liquid Crystal Display (LCD). If the liquid leaks, it can be harmful to the user and to the system.
?	Before connecting any non-NEC, customer-provided equipment, check with the supplier to ensure that the equipment is compatible. If the supplier cannot confirm the compatibility, do not connect the equipment. Connecting incompatible equipment might cause a fire or an electrical shock.

WARNING	
	Do not place any object on the system or the main power source. If the object falls, it might cause personal injury or damage to the equipment.
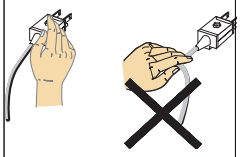	When removing a plug from an outlet, be sure to grip the plug, not the cord. Gripping the cord to remove the plug could cause a fire or an electrical shock to occur.
	If lightning causes a fault, contact the dealer.
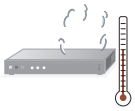	Provide the appropriate temperature, humidity, and ventilation on an around-the-clock basis. For example, at a height that is one meter (3.28 feet) above the floor, the temperature should be between 20°C and 25°C (68°F to 77°F) and the humidity should be approximately 50%.
	Take appropriate anti-static measures so that the other end of the anti-static kit can be connected to the metal part of the frame.
	Observe the following precautions when using any optional batteries: • The system's emergency back-up battery may be a rechargeable lead battery. Check the emergency battery for an electrical failure. • Battery acid (electrolyte) is extremely harmful to human skin and eyes. If battery acid contacts skin, wash the affected area with soap and water. If battery acid contacts the eyes, flush the eyes with water. In either event, seek medical attention. If there is battery acid on a cloth, use water to wash the battery acid from the cloth. • Do not intentionally short batteries. Do not put the battery near a fire or in a fire. Do not disassemble the battery, drop it or knock it against another object. • The battery's life expectancy is affected by its environment. The normal battery life is approximately three years. If the battery is used in an outdoor setting and is exposed to high temperatures, its life expectancy drops to approximately one year. • Perform periodic diagnostic tests and maintenance procedures on the emergency battery and its terminals to ensure their readiness. If there is a power failure and the emergency battery is not ready, then the system will not work. Additionally, a damaged or dead battery, or terminals that need replacement might cause battery acid to leak, which might cause smoke or a fire. The battery and terminals are periodic replacement parts (the cost is chargeable to the customer). A service contract, with the supplier or service technician, to perform routine maintenance for the battery is recommended.
	Do not touch peripheral equipment with wet hands. Do not allow any liquid to touch any of the peripheral equipment.
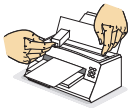	Do not touch the printer's internal components when replacing disposables such as a cartridge or a ribbon. Ensure that the printer is turned off and that it is not hot in order to prevent burns from any accidental contact with the internal components.
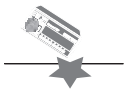	Do not drop the peripheral equipment or knock it against another object. These actions might cause an equipment failure.

CAUTION	
Thinner	Do not use benzine, thinner or alcohol for cleaning. When removing dust and dirt, put diluted, mild detergent on a cloth and then wring out the cloth. Remove the dust and dirt with the cloth and then wipe the cleaned area with a dry cloth.
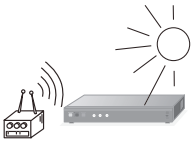	Do not place any equipment in the following environments: • Locations that are exposed to direct sunlight • Locations where the moisture level exceeds the allowed level • Locations where the equipment might be exposed to water, oil, or chemicals • Locations with very low temperatures, such as in a walk-in cooler or freezer • Locations that are exposed to Electromagnetic Interference (EMI) from devices such as television sets and two-way radios • Locations that receive illegal electric waves The life expectancies of the system and the main power source will be shortened if placed in a location that is affected by hydrogen sulfide or salt, such as a seaside area.

Installation Environment

Consider the following items before the installation.

Stability

WARNING	
	Install the system with anchor bolts to prevent constant movement or vibration, such as from a nearby motor or automatic door, and to resist catastrophic movement from natural disasters, such as an earthquake. If the system moves or falls, an injury could occur.

Floor, Wall and Ceiling

WARNING	
	The wall and ceiling materials must be resistant to Electrostatic Discharge (ESD) and provide heat insulation. Since the battery's life expectancy depends on the ambient temperature, the room where the battery is installed must be well ventilated and vented to the outside. Check the battery specifications to determine if the battery can or cannot be installed near a motor or a power transformer.
	The floor material that is under and around the system must be resistant to ESD.

Windows

CAUTION	
	Keep all of the windows closed if the location is affected by dust, sea breeze or corrosive gas. Curtains or blinds are necessary to avoid direct sunlight.

Fire Extinguisher

WARNING	
	Place a fire extinguisher for electrical fires (such as a carbon-gas fire extinguisher or a halon-gas fire extinguisher) near the system. It is recommended that the room also be equipped with an automatic fire-detection system. In the event of smoke and fire, turn off the main power source and the backup battery, then use the fire extinguisher to put out the fire while trying to avoid inhaling any smoke.

Safety Environment

WARNING	Consider measures to deal with disasters (such as fires, floods and earthquakes) and to ensure the safety of the staff.
	Regularly clean the room or rooms where the switching equipment resides.
	Do not spray any insecticides directly on the equipment (insecticides can adversely affect the switching equipment).

Air Conditioning Facilities

WARNING	The system and the air conditioning system must be installed separately and have separate power sources.
	To prevent an electromagnetic arc from causing noise, attach a surge-limiting capacitor and resistor on the air conditioner's electromagnetic switch's coil.
	It might be necessary to adjust the ventilation so the air conditioning is equally effective throughout the equipment room.
	Do not place the system in a location where condensation might fall from an air conditioner or a duct.
	Do not place the system in a location where hot and humid air is exhausted, as this might damage the system.

Lightning Strikes

WARNING	The grounding system must protect the system, MDF, main power source, PCPro, printer, modems, etc. from damage caused by lightning strikes and electrical surges. All the grounding conductors must have a resistance of less than one Ω to bring a zerovoltage reference to the system components. To achieve this, the following ground conductors must connect to the Primary Ground Bar: • The Earth Ground (E) from the Rectifier • The Frame Ground (FE) from the system • The Power Ground (PE) from the system, through the Rectifier • The Frame Ground (FE) from the MDF • The AC service outlets, with plug outlets, for the PCPro, printer, modems and any measurement devices, such as a protocol analyzer.

Electromagnetic Interference

CAUTION	When installing an additional device in the vicinity of the system, observe the installation and operating instructions for the device. Otherwise, EMI noise from the device may cause a malfunction of the system.

Disposables and Periodic-replacement Parts

CAUTION	Many parts, such as batteries, backup batteries, fuses and displays need to be replaced on a periodic basis. In the event of sudden traffic, a part that is past due for replacement might lead to a system failure and damage to the system. A service contract with the dealer or its service technician to monitor the replacement cycles and to supply the replacement parts and the necessary disposables is recommended.

MEMO

Regulatory

BATTERY DISPOSAL

The SL2100 system includes the batteries listed below. When disposing of these batteries, Chassis, and/or Unit, you must comply with applicable regulations relating to your location regarding proper disposal procedures.

Unit Name	Type of Battery	Quantity	Note
IP7[ ]-CPU-C1	Lithium	1	
External Battery (IP4WW-Battery Box)	Sealed Lead	2 per IP4WW-Battery Box	

The SL2100 IP7[ ]-CPU-C1 provides Real-Time Clock backup for approximately three years. The Lithium battery should be replaced every two years.

IMPORTANT SAFEGUARDS FOR BATTERY DISPOSAL

DO NOT PLACE USED BATTERIES IN YOUR REGULAR WASTE! THE PRODUCT YOU PURCHASED CONTAINS LITHIUM, SEALED LEAD BATTERIES. LITHIUM, SEALED LEAD BATTERIES MUST BE COLLECTED, RECYCLED, OR DISPOSED OF IN AN ENVIRONMENTALLY SOUND MANNER.

The incineration, landfilling or mixing of sealed lead batteries with the municipal solid waste stream is PROHIBITED BY LAW in most areas. Contact your local solid waste management officials for other information regarding the environmentally sound collection, recycling, and disposal of the battery.

Sealed lead batteries must be returned to an approved sealed lead battery recycler. This may be where the batteries were originally sold or a local seller of automotive batteries. Contact your local waste management officials for other information regarding the environmentally sound collection, recycling and disposal of the battery contained in this product.

The packaging for the SL2100 system contains the following labels regarding proper disposal.

Pb

CONTAINS SEALED LEAD BATTERY.
BATTERY MUST BE RECYCLED. MUST NOT BE DISPOSED OF IN MUNICIPAL WASTE.

EUROPEAN UNION INFORMATION

Notice to the user

The system described in this manual is intended to be connected to analog and digital networks and supports a wide range of peripheral equipment. The following interfaces are available for connection to public analog and digital telecommunication networks:

- TBR3 ISDN basic rate interface
- TBR4 ISDN primary rate interface
- ES203-021 Analogue interface

To take advantage of all features of this system and the connected equipment, the country or network specific features should match the supported features of the system. For an overview of the supported features, refer to the detailed documentation that comes with this system, contact your local NEC Enterprise Solutions representative or the support desk of NEC Enterprise Solutions.

Declaration of conformity

Hereby, NEC Enterprise Solutions, declares that the SL2100 is in compliance with the essential requirements and other relevant provisions of Directives 2014/35/EU (LVD), 2014/30/EU (EMC), 2011/65/EU (RoHS).

For the Declaration of Conformity, visit: http://www.nec-enterprise.com/Support/Declaration-of-Conformity/

Electromagnetic Compatibility

For the SL2100 system the following warning is applicable:

Warning

This is a class A product. In a domestic environment this product may cause radio interference in which case the user may be required to take adequate measures.

PRODUCT DISPOSAL INFORMATION

For Countries in the European Union

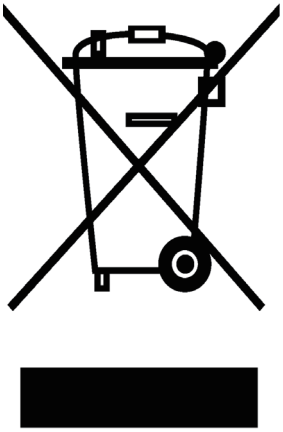

The symbol depicted here has been affixed to your product to inform you that electrical and electronic products should not be disposed of as municipal waste.

Electrical and electronic products including the cables, plugs and accessories should be disposed of separately to allow proper treatment, recovery and recycling. These products should be taken to a designated facility where the best available treatment, recovery and recycling techniques are available. Separate disposal has significant advantages: valuable materials can be re-used and it prevents the dispersion of unwanted substances into the municipal waste stream. This contributes to the protection of human health and the environment.

Please be informed that a fine may be imposed for illegal disposal of electrical and electronic products via the general municipal waste stream.

To facilitate separate disposal and environmentally sound recycling arrangements have been made for local collection and recycling. If your electrical and electronic products must be disposed of please refer to your supplier or the contractual agreements that your company has made upon acquisition of these products.

BATTERY INFORMATION

Defective or exhausted batteries should never be disposed of as municipal waste. Return old batteries to the battery supplier, a licensed battery dealer or a designated collection facility. Do not incinerate batteries. This product uses Lithium batteries. Do not use any other type.

For an overview of the location of batteries used in these systems, the battery replacement or removal instructions, please refer to the SL2100 System Hardware Manual.

HEARING AID COMPATIBILITY

NEC Multiline Terminals and NEC Single Line Telephones that are provided for this system are hearing aid compatible. The manufacturer of other Single Line Telephones for use with the system must provide notice of hearing aid compatibility to comply with FCC rules that now prohibit the use of non-hearing aid compatible telephones.

MEMO

Introduction

SECTION 1 GENERAL INFORMATION

The SL2100 system is a progression from SL1000/SL1100 system and is newly provide a legacy and IP communication system for All-In-One Small Box to support Small and Medium Business with easy installation and easy operation.

The SL2100 has new designed Multiline Terminals and a new small compact chassis comes with the four universal slots and one CPU/EXIFE slot for Slot-In design chassis.

The SL2100 system enable to expand up to three chassis (one Main and two Expansion chassis) by bus connection and provides a maximum of 36 analog trunks and 72 Multiline Terminals also equipped to support IP Networking, Digital Networking (BRI/PRI, T1/E1) and IP Trunks or IP extensions.

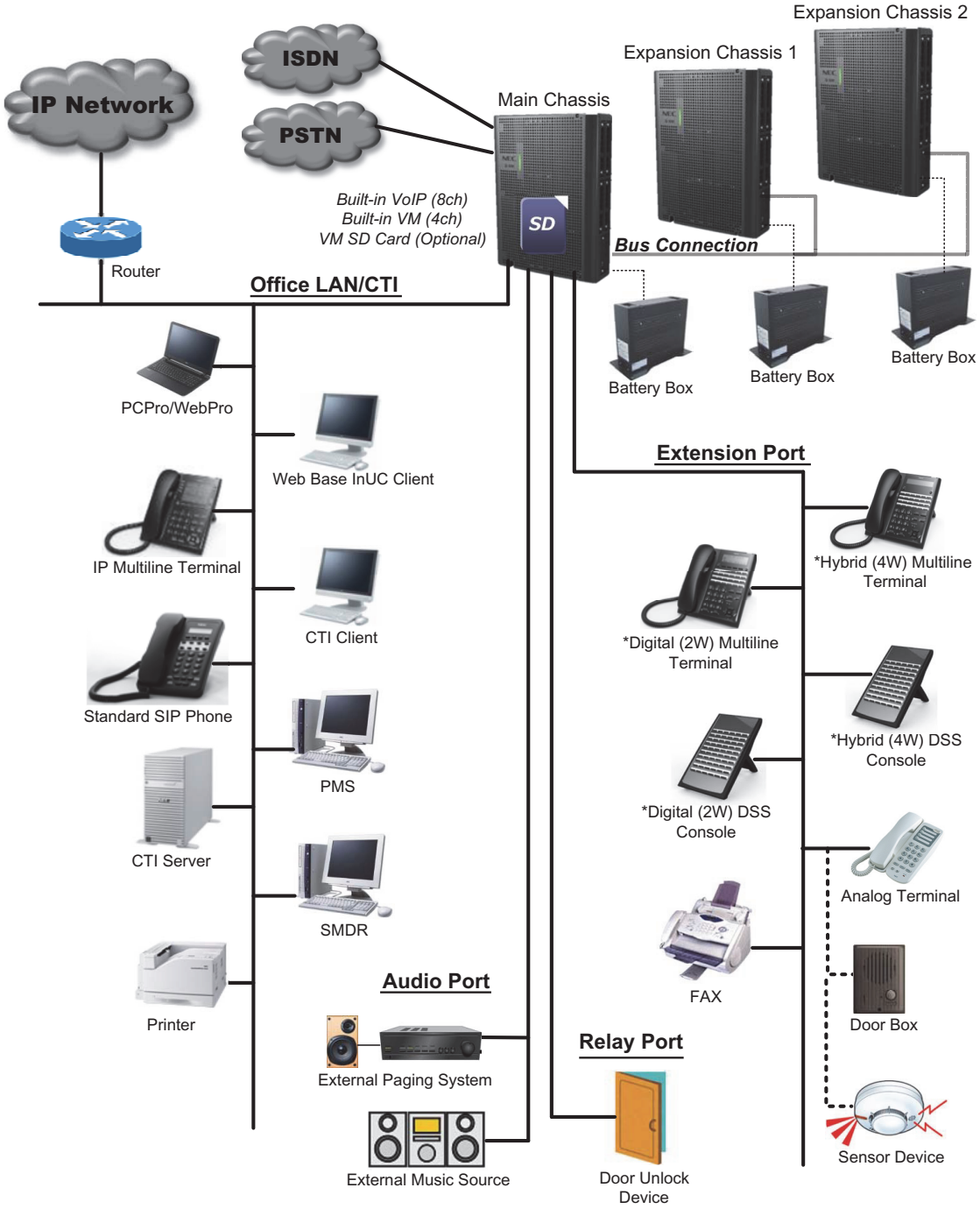

Figure 1-1 System Configuration

**** SL2100 does not allow to accommodate both Digital (2W) and Hybrid (4W) Multiline Terminal at the same time on a system.***

SECTION 2 EQUIPMENT LIST

Table 1-1 Hardware Equipment List

Category	Stock Number	Equipment Name	Eqipment Description	Note
Chassis	BE116493	IP7WW-4KSU-C1	Main/Expansion Chassis with AC Cable (EU <2-pin> type) • Power Supply with Backup Battery Circuit • CPU/EXIFE Slot : 1, Universal Slot : 4	
Chassis	BE116494	IP7WW-4KSU-C1 w/o C	Main/Expansion Chassis without AC Cable • Power Supply with Backup Battery Circuit • CPU/EXIFE Slot : 1, Universal Slot : 4	
CPU	BE116498	IP7EU-CPU-C1	SL2100 Main Processor Board (with EU Main Software) • VoIPDB Daughter Board Connector : 1 • EXIFB Daughter Board Connector : 1 • SD Card Slot : 1 • Supported only for built-in 4ch of VRS (Not supported for Built-in 4ch of VM without SDVML/SDVMS) *Not supported for Built-in 4ch of VM without SDVML/SDVMS.*	
CPU	BE117657	IP7EU-CPU-C1-A	The hardware is same as IP7EU-CPU-C1. The feature Includes: • Built-in 4ch of VRS/VM • 4pc of SL2100 IP TRUNK-01 LIC • 4pc of SL2100 IP EXT-01 LIC	
Boards for Chassis expand	BE116501	IP7WW-EXIFB-C1	System Expansion Bus Daughter Board (mount to CPU) • 2 Bus connectors for Expansion Chassis • Additional Telephony Resources • VRS/VM (InMail) Channels expansion (up to 16ch) • Analog Modem (V.34)	
	BE116504	IP7WW-EXIFE-C1	Bus Board for Expansion Chassis (Install to CPU/EXIFE Slot of Exp. Chassis)	
Backup Battery Unit	BE110239	IP4WW-Battery Box	External Backup Battery Box (Battery itself is NOT attached)	
Extension Boards	BE116505	IP7WW-308U-A1	3 Analog Trunks + 8 Hybrid Extensions (4W MLT or SLT) Board	
	BE116506	IP7WW-082U-B1	8 Digital Extensions (2W) + 2 Analog Extensions Board	
	BE116507	IP7WW-008U-C1	8 Hybrid/Analog Extensions Board	
	BE116509	IP7WW-000U-C1	0 Extensions Board (for Trunk daughter board)	
Trunk Daughter Boards	BE116510	IP7WW-3COIDB-C1	3 Analog Trunks Daughter Board (mount to 082U/008U/000U)	
	BE116511	IP7WW-2BRIDB-C1	2 ISDN BRI Daughter Board (mount to 082U/008U/000U)	
	BE116512	IP7WW-1PRIDB-C1	1 ISDN PRI/T1 Daughter Board (mount to 082U/008U/000U)	
Option Items on CPU	BE116500	IP7WW-VOIPDB-C1	VoIP GW Daughter Board (mount to CPU) Max 128ch	
	BE116502	IP7WW-SDVMS-C1	SD Card (1GB) for VRS/VM (InMail) Storage	
	BE116503	IP7WW-SDVML-C1	SD Card (4GB) for VRS/VM (InMail) Storage	
Multiline Terminals (Legacy)	BE116513	IP7WW-12TXH-A1 TEL (BK)	12 Keys, Hybrid (4W) Multiline Terminal (Black)	

Category	Stock Number	Equipment Name	Eqipment Description	Note
	BE116514	IP7WW-24TXH-A1 TEL (BK)	24 Keys, Hybrid (4W) Multiline Terminal (Black)	
	BE116515	IP7WW-12TXH-B1 TEL (BK)	12 Keys, Digital (2W) Multiline Terminal (Black)	
	BE116516	IP7WW-24TXH-B1 TEL (BK)	24 Keys, Digital (2W) Multiline Terminal (Black)	
SL1000 Terminals	BE110261	IP4WW-12TXH-A-TEL (WH)	12 Keys, Hybrid (4W) Multiline Terminal (White)	
	BE110262	IP4WW-12TXH-A-TEL (BK)	12 Keys, Hybrid (4W) Multiline Terminal (Black)	
	BE110263	IP4WW-24TXH-A-TEL (WH)	24 Keys, Hybrid (4W) Multiline Terminal (White)	
	BE110264	IP4WW-24TXH-A-TEL (BK)	24 Keys, Hybrid (4W) Multiline Terminal (Black)	
SL1100 Terminals	BE110269	IP4WW-12TXH-B-TEL (WH)	12 Keys, Digital (2W) Multiline Terminal (White)	
	BE110270	IP4WW-12TXH-B-TEL (BK)	12 Keys, Digital (2W) Multiline Terminal (Black)	
	BE110271	IP4WW-24TXH-B-TEL (WH)	24 Keys, Digital (2W) Multiline Terminal (White)	
	BE110272	IP4WW-24TXH-B-TEL (BK)	24 Keys, Digital (2W) Multiline Terminal (Black)	
IP Multiline Terminals	BE116517	IP7WW-8IPLD-C1 TEL (BK)	8 Keys, IP DESI-Less Multiline Terminal (Black) • Support the “Giga” • Support to expand the number of keys (up to 16/32) • No Ethernet Cable is attached	
SL1100 IP Multiline Terminals	BE110277	IP4WW-24TIXH-C-TEL (WH)	24 Keys, IP Multiline Terminal (White)	
	BE110278	IP4WW-24TIXH-C-TEL (BK)	24 Keys, IP Multiline Terminal (Black)	
Terminal Options	BE116518	IP7WW-60D DSS-A1 CONSOLE (BK)	60 Keys, Hybrid (4W) DSS Console (Black)	
	BE116519	IP7WW-60D DSS-B1 CONSOLE (BK)	60 Keys, Digital (2W) DSS Console (Black)	
	BE110790	IP4WW-WALL MOUNT UNIT	Wall-Mount Unit for IP7WW-8IPLD-C1TEL	
	BE113158	DX7NA-WHA-A1	Cordless Headset Adapter	
DT400 Terminals	BE113861	DTZ-12D-3P (WH) TEL	Value Digital 12-button Display Telephone	
	BE113862	DTZ-12D-3P (BK) TEL	Value Digital 12-button Display Telephone	
	BE113863	DTZ-24D-3P (WH) TEL	Value Digital 24-button Display Telephone	
	BE113864	DTZ-24D-3P (BK) TEL	Value Digital 24-button Display Telephone	
	BE113869	DCZ-60-2P (WH) CONSOLE	60-button Direct Station Selection (DSS) Console	
	BE113870	DCZ-60-2P (BK) CONSOLE	60-button Direct Station Selection (DSS) Console	
DT800 Terminals	BE115113	ITY-6D-1P (BK) TEL	Entry IP 6-button Display Telephone	
	BE115114	ITY-8LDX-1P (BK) TEL	Entry IP 8-button Display Telephone (DESI Less)	
SIP Terminals	BE112179	ITX-1DE-1W(BK) TEL	Standard SIP Phone	
Door Box	BE108045	DP-D-1D	Doorphone	
	BE109741	DX4NA Doorphone	Doorphone	
	BE109742	HS.D503DOR-A	Doorphone	

Category	Stock Number	Equipment Name	Eqipment Description	Note
Accessories	BE113873	BCA-ZP UNIT	Bluetooth Connection Adapter (DT430 only)	

Table 1-2 License Line-Up

Category	Stock Number	License Name	Description	Note
IP Related	BE116744	SL2100 IP CHANNEL-16 LIC	Additional VoIP Resource License (16ch per License) for VOIPDB	
	BE116745	SL2100 IP TRUNK-01 LIC	IP Trunk License	
	BE116746	SL2100 IP EXT-01 LIC	IP Extension License for Std-SIP Terminal, ITY-6D and ITY-8LDX need this license.	It is NOT required for SL2100 IP Terminal
	BE116747	SL2100 ENCRYPTION LIC	Encryption License for IP Multiline Terminal	
System Features	BE116750	SL2100 REMOTE CONF-01 LIC	Conference Bridge (Remote Conference) License	
	BE116751	SL2100 VM E-MAIL NOTIFY LIC	InMail E-Mail Notification License	No extra Hardware is required
	BE116753	SL2100 HOTEL LIC	Hotel/Motel Feature License	
	BE116754	SL2100 PMS LIC	PMS Feature License for 64 Rooms	
	BE116755	SL2100 XMLPRO LIC	XMLPRO Feature License	
	BE116756	SL2100 3RD CTI LIC	3rd Party CTI Feature License	
	BE117668	SL2100 ACD P-EVENT LIC	ACD P-EVENT Feature License	
Client	BE116757	SL2100 MOBILE EXT-01 LIC	Additional Mobile Extension Port License	
	BE116758	SL2100 IN-UC WEB CLIENT-01 LIC	InUC Web Client License (by WebRTC technology)	
	BE117473	SL2100 IN-UC 1ST CTI-01 LIC	1st Party CTI License for InUC	
	BE116760	SL2100 WEB VIDEO CNF-01 LIC	Web Video Conference License for InUC Web Client	
On-Board Apps.	BE116763	SL2100 INGUARD LIC	Toll Fraud Guard License	
	BE116764	SL2100 LUA PMS LIC	PMS API Converter License	(TBD)

2.1 Chassis/CPU and Boards For Chassis Expand

2.1.1 IP7WW-4KSU-C1, IP7WW-4KSU-C1 w/o C

This is one common chassis used for the Controlling (Main) chassis or Expansion chassis, A maximum of three chassis (one controlling and two expansion chassis) can be connected by bus connection. And support four chassis (one controlling and three expansion chassis) by IP connection to expand the system capacity. (Future Available)

The following are included with the chassis.

- Four universal slots
- One CPU/EXIFE slot
- Power Supply with Backup Battery Circuit
- One connector for External Backup Battery
- Back Plane Board (one connecter for CPU/EXIFE slot, four connecters for Option Board slots)
- AC Cable:

  AC250V, 10A (IP7WW-4KSU)

  Not attached (local supply) (IP7WW-4KSU w/o C)

2.1.2 IP7[ ]-CPU-C1/IP7[ ]-CPU-C1-A

The CPU-C1 board is installed into the CPU/EXIFE Slot in the Controlling Chassis and controls all the functions and operations of the SL2100 system using the system software loaded into the CPU-C1 memory. One CPU-C1 board must be installed in the Controlling Chassis.

The CPU-C1 provides;

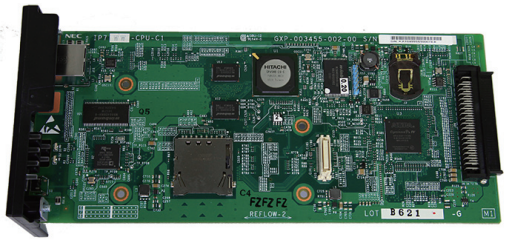

- Built-In 8ch VoIP Resources
- Built-In 4ch VRS capability.
  The voice mail (InMail) function isn't being supported without SDVMS/SDVML card.
- 2 hours VRS storage without SD Card
- Four clients of Mobile Extension
- Maximum Four participants of Web Video Conference
- One Voice Prompt of VRS as default
  - Default Language: UK English
- One VoIPDB daughter board connector
- One Ethernet (100M) port (RJ45)
- One EXIFB daughter board connector
- One SD Card slot (for expand VRS/VM storage)

The CPU-C1-A provides;

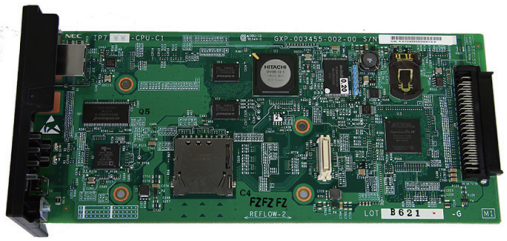

- Built-In 8ch VoIP Resources
- Built-In 4ch VRS/VM (InMail) capability
- 2 hours VRS/VM (InMail) storage without SD Card
- Four clients of Mobile Extension
- Maximum Four participants of Web Video Conference
- One Voice Prompt of VRS/VM (InMail) as default
  - Default Language: UK English
- One VoIPDB daughter board connector
- One Ethernet (100M) port (RJ45)
- One EXIFB daughter board connector
- One SD Card slot (for expand VRS/VM storage)
- 4 pcs of SL2100 IP TRUNK-01 LIC and 4 pcs of SL2100 IP EXT-01 LIC are bundled

2.1.3 IP7WW-EXIFB-C1

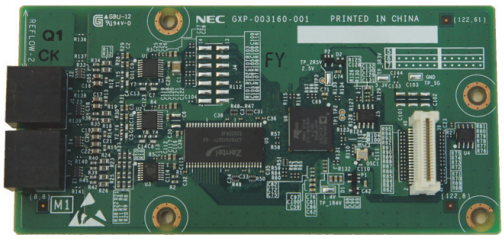

Using a Cat5 cable, EXIFB-C1 board mount onto the CPU-C1 board is individually connected to each EXIFE-C1 board (on Expansion Chassis)

- VRS/VM (InMail) channels expansion (Up to 16ch)
- Additional 48 Telephony resources (DTMF/Dial tone/Busy tone/FSK caller-ID receiver/sender)
- Support Analog Modem (V.34)

2.1.4 IP7WW-EXIFE-C1

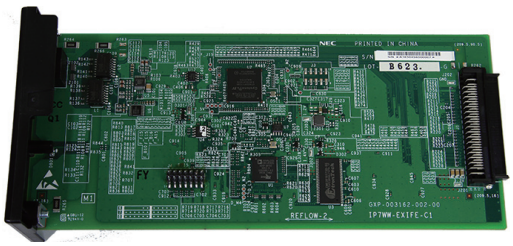

The EXIFE-C1 board is installed into the CPU/EXIFE slot on the Expansion Chassis.

- Additional 32 telephony resources (DTMF/Dial tone/Busy tone/FSK caller-ID receiver/sender) for Expansion Chassis
- One Bus connectors for Main Chassis (RJ61)

2.2 Backup Battery Unit

2.2.1 IP4WW-Battery Box

Connected to each Chassis power supply, the external backup battery provides DC power in case a loss of AC power occurs. An optional (locally procured), external battery source can be used to provide power during a power failure.

- Connect this box to the power supply at each Chassis.
- Wall/floor-mountable
- Backup duration is approximately one hour per chassis.
- Battery itself is local procure.
  (12 V, 7 AH x 2 pcs of GS Yuasa NP7-12)

2.3 Trunk/Extension/ISDN Expansion Interface Boards

2.3.1 IP7WW-308U-A1

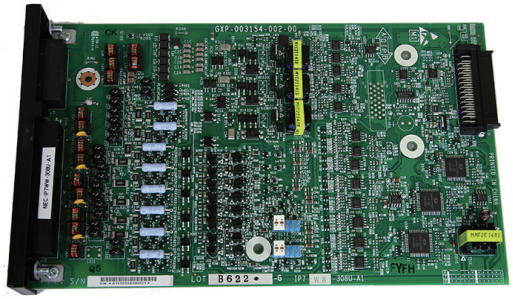

This 308U-A1 board is installed to the Universal slot in the IP7[ ]-4KSU-C1 chassis and provides a total of three analog trunks and eight hybrid/analog extension ports. Two general purpose relay, one Audio-In and one Audio-Out ports are initially available.

- Install this board to the Universal slot at Controlling/ Expansion Chassis
- Enable to connect DSS console to hybrid extension port No.8.
- Enable to connect up to two Door Boxes to hybrid extension port No.6 and No.7.
- The 308U-A1 board and 082U-B1 board cannot be installed in the same system.

2.3.2 IP7WW-082U-B1

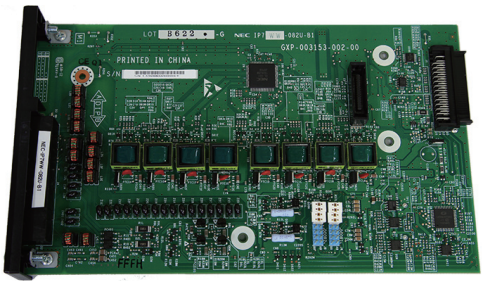

This 082U-B1 board is installed to the Universal slot in the IP7[ ]-4KSU-C1 chassis and provides a total of eight digital extension ports and two analog extension ports. Two general purpose relay, one Audio-In and Audio-Out ports are initially available. Either the analog trunk daughter board (3COIDB), ISDN BRI daughter board (2BRIDB) or ISDN PRI/T1/E1 daughter board (1PRIDB) can be mounted on this board.

- Install this board to the Universal slot at Controlling/ Expansion Chassis
- Enable to connect DSS console to any digital extension port.
- Enable to connect up to two Door Boxes to analog extension ports on this board.
- The 308U-A1 board and 082U-B1 board cannot be installed in the same system.

2.3.3 IP7WW-008U-C1

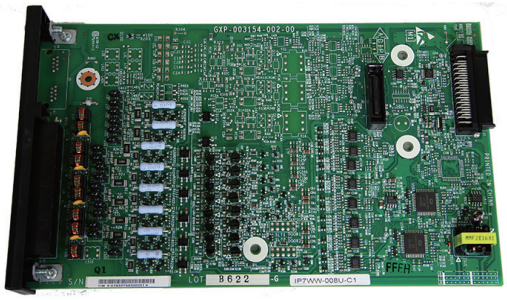

This 008U-C1 board is installed to the Universal slot in the IP7[ ]-4KSU-C1 chassis and provides a total of eight hybrid/ analog extension ports. Either the analog trunk daughter board (3COIDB), ISDN BRI daughter board (2BRIDB) or ISDN PRI/T1/E1 daughter board (1PRIDB) can be mounted on this board.

- Install this board to the Universal slot at Controlling/ Expansion Chassis
- Enable to connect DSS console to hybrid/analog extension port No.8.
- One Trunk daughter board connection

2.3.4 IP7WW-000U-C1

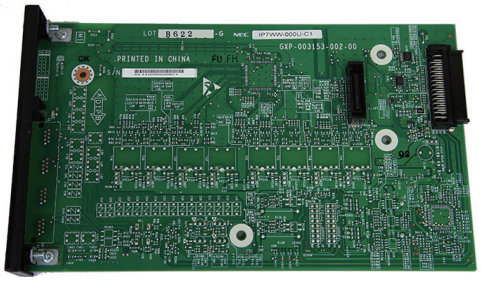

This is an expansion board for mounting a 3COIDB-C1, 2BRIDB-C1 or 1PRIDB daughter board, and is installed to the Universal slot in the IP7[ ]-4KSU-C1 chassis.

- Install this board to the Universal slot at Controlling/ Expansion Chassis

2.3.5 IP7WW-3COIDB-C1

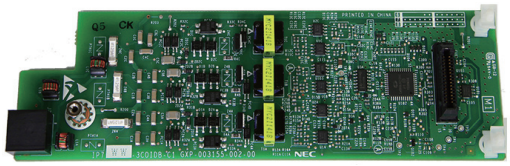

This 3COIDB-C1 daughter board provides three analog trunk and is mount on the 082U-B1, 008U-[ ]1 or 000U-C1 board. A total of four 3COIDB boards can be mounted per Chassis.

- Mount to the 082U/008U/000U
- No power failure transfer circuit
- No Ground Start Trunk Supported

2.3.6 IP7WW-2BRIDB-C1

The 2BRIDB-C1 daughter board provides two ISDN (Basic Rate) circuit and is mounted on the 082U-B1, 008U-[ ]1 or 000U-C1 board. A total of four 2BRIDB boards can be installed per Chassis.

- Mount to the 082U/008U/000U
- Supports T/S point connection (Hard-switch).
- All ISDN circuits are not supplied with DC power from the system

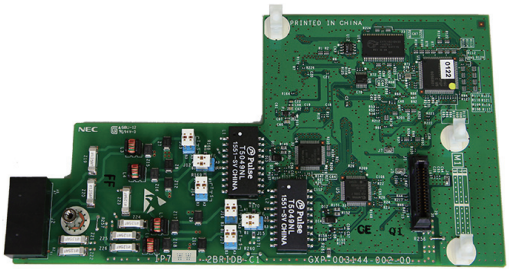

2.3.7 IP7WW-1PRIDB-C1

The 1PRIDB-C1 daughter board is mounted on the 082U-B1, 008U-[ ]1 or 000U-C1 board and installed to the Universal slot in the IP7[ ]-4KSU-C1 chassis and provides either an ISDN Primary Rate Interface, T1 Interface or E1 interface. A total of three 1PRIDBs can be installed per system or one 1PRIU per Chassis.

- Mount to the 082U/008U/000U
- Supports T/S point connection (Hard-switch).
- All ISDN circuits are not supplied with DC power from the system

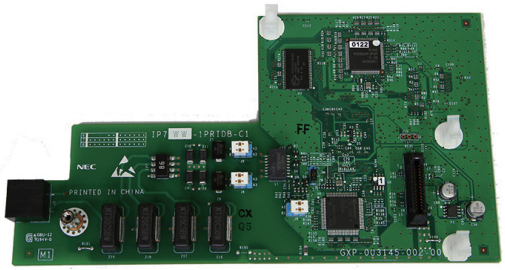

2.4 Optional Interface Boards

2.4.1 IP7[ ]-VOIPDB-C1

The VOIPDB-C1 daughter board provides the RTP/RTCP voice processing function and mount this board onto the CPU-C1 board (VOIPDB slot) at controlling chassis.

- Maximum 128 channels are available by license control.
- One Gigabit port (RJ45)

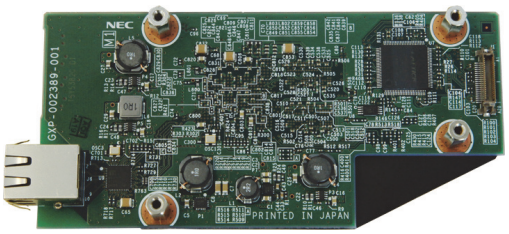

2.4.2 IP7WW-SDVMS-C1/IP7WW-SDVML-C1

The total 2 hours storage and one voice prompt is initially available on the CPU-C1. The SDVM[ ]-C1 is required when the VRS/VM (InMail) storage is expanded more than 2 hours and the 26 language of voice prompts.

Two types of VRS/VM (InMail) SD cards are for storage purpose and mount onto the CPU-C1 board (SD Card Slot)

- SDVMS-C1: 1GB (Approx. 15 hours recording)
- SDVML-C1: 4GB (Approx. 120 hours recording)
- Up to 26 languages of voice prompts are available

2.5 Multiline Telephones and Optional Equipment

2.5.1 IP7WW-12TXH-A1 TEL

The 12TXH-A1 TEL is a 4-wire multiline telephone featuring:
- Color: Black
- Connected to: Hybrid Extension Port
- Programmable keys: 12
- LCD: 16 digits x 2 lines
- Handsfree: Half-duplex
- Backlit dial pad: No
- Headset port: No
- Angle Adjustment: 2-steps
- Wall-Mounting kit: Built-in
- EHS Support: No
- PC Port: No

2.5.2 IP7WW-24TXH-A1 TEL

The 24TXH-A1 TEL is a 4-wire multiline telephone featuring:
- Color: Black
- Connected to: Hybrid Extension Port
- Programmable keys: 24
- LCD: 16 digits x 2 lines
- Handsfree: Half-duplex
- Backlit dial pad: No
- Headset port: No
- Angle Adjustment: 2-steps
- Wall-Mounting kit: Built-in
- EHS Support: No
- PC Port: No

2.5.3 IP7WW-12TXH-B1 TEL

The 12TXH-B1 TEL is a 2-wire digital multiline telephone featuring:
- Color: Black
- Connected to: Digital Extension Port
- Programmable keys: 12
- Soft Keys: 4
- LCD: 24 digits x 3 lines with Backlit
- Handsfree: Full-duplex
- Backlit dial pad: No
- Headset port: Yes
- Angle Adjustment: 2-steps
- Wall-Mounting kit: Built-in
- EHS Support: by WHA (Optional)
- PC Port: No

2.5.4 IP7WW-24TXH-B1 TEL

The 24TXH-B1 TEL is a 2-wire digital multiline telephone featuring:

- Color: Black
- Connected to: Digital Extension Port
- Programmable keys: 24
- Soft Keys: 4
- LCD: 24 digits x 3 lines with Backlit
- Handsfree: Full-duplex
- Backlit dial pad: No
- Headset port: Yes
- Angle Adjustment: 2-steps
- Wall-Mounting kit: Built-in
- EHS Support: by WHA (Optional)
- PC Port: No

2.5.5 IP4WW-12TXH-A TEL

The 12TXH-A TEL is a 4-wire multiline telephone featuring:

- Programmable keys: 12
- LCD: 16 digits x 2 lines
- Handsfree: Half-duplex
- Backlit dial pad: No
- Angle Adjustment: 2-steps
- Wall-Mounting kit: Built-in

2.5.6 IP4WW-24TXH-A TEL

The 24TXH-A TEL is a 4-wire multiline telephone featuring:

- Programmable keys: 24
- LCD: 16 digits x 2 lines
- Handsfree: Half-duplex
- Backlit dial pad: No
- Angle Adjustment: 2-steps
- Wall-Mounting kit: Built-in

2.5.7 IP4WW-12TXH-B TEL

The 12TXH-B TEL is a 2-wire digital multiline telephone featuring:

- Programmable keys: 12
- Soft Keys: 4
- LCD: 24 digits x 3 lines with Backlit
- Handsfree: Full-duplex
- Backlit dial pad: Yes
- Angle Adjustment: 2-steps
- Wall-Mounting kit: Built-in
- EHS Support: by WHA (Optional)
- PC Port: No

2.5.8 IP4WW-24TXH-B TEL

The 24TXH-B TEL is a 2-wire digital multiline telephone featuring:

- Programmable keys: 24
- Soft Keys: 4
- LCD: 24 digits x 3 lines with Backlit
- Handsfree: Full-duplex
- Backlit dial pad: Yes
- Angle Adjustment: 2-steps
- Wall-Mounting kit: Built-in
- EHS Support: by WHA (Optional)
- PC Port: No

2.5.9 IP7[ ]-8IPLD-C1 TEL

The 8IPLD-C1 TEL is an IP multiline telephone featuring:

- Color: Black
- Programmable keys: 32
- Soft Keys: 4
- LCD: 168 x 128 Dots with Backlit
- Handsfree: Full-duplex
- Interfaces 2: 1 x LAN and 1 x PC Ethernet Port (10Base T/ 100Base TX/1000Base TX)
- Power Feeding: PoE (IEEE802.3af) Only
- Support CODEC: G.711/G.729a
- Backlit dial pad: No
- Headset port: Yes
- Angle Adjustment: 2-steps
- Wall-Mounting kit: IP4WW-WALL MOUNT UNIT (Optional)
- EHS Support: by EHS Cable (Plantronics APD-80 (locally procure*))

2.5.10 IP4[ ]-24TIXH-C TEL

The 24TIXH-C TEL is an IP multiline telephone featuring:

- Programmable keys: 24
- Soft Keys: 4
- LCD: 24 digits x 3 lines with Backlit
- Handsfree: Full-duplex
- Interface: 2 x RJ45 Ethernet Ports (10Base-T/100Base-TX) for LAN and PC
- Power Feeding: AC Adapter (optional) or PoE (IEEE802.3af)
- Support CODEC: G.711/G.729a/G.722
- Backlit dial pad: Yes
- Angle Adjustment: 2-steps
- Wall-Mounting kit: IP4WW-WALL MOUNT UNIT (Optional)

2.5.11 ITY-6D-1( ) (BK) TEL

This ITY-6D-1 TEL is an IP multiline telephone featuring:
- Color: Black
- Programmable keys: 6
- Soft Keys: 4
- LCD: 168 x 41 Dots with Backlit
- Two-color LED for Incoming calls
- Handsfree: Full-duplex
- 10 Base-T/100 Base-TX network interface
- Power Feeding: PoE (IEEE802.3af) Only
- Support CODEC: G.711/G.729a
- Backlit dial pad: No
- Headset port: Yes
- Angle Adjustment: 2-steps
- Wall-Mounting kit: IP4WW-WALL MOUNT UNIT (Optional)

2.5.12 ITY-8LDX-1( ) (BK) TEL

The ITY-8LDX-1 TEL is an IP multiline telephone featuring:
- Color: Black
- Programmable keys: 8
- Soft Keys: 4
- LCD: 168 x 128 Dots with Backlit
- Handsfree: Full-duplex
- Interface: 2 x RJ45 Ethernet Ports (10Base-T/100Base-TX) for LAN and PC
- Power Feeding: PoE (IEEE802.3af) Only
- Support CODEC: G.711/G.729a
- Backlit dial pad: No
- Headset port: Yes
- Angle Adjustment: 2-steps
- Wall-Mounting kit: IP4WW-WALL MOUNT UNIT (Optional)

2.5.13 IP7WW-60D DSS-A

The DSS console gives a multiline terminal user a Busy Lamp Field (BLF) and one-button access to extensions, trunks and system features. Mainly designed for operator use, the 60-button DSS console provides an additional 60 programmable keys.
- Connect this console to extension port No. 8 at 308U/ 008U of each Chassis.
- Programmable keys: 60
- Angle Adjustment: 2-steps
- Wall-Mounting kit: Built-in

2.5.14 IP7WW-60D DSS-B

The DSS console gives a multiline terminal user a Busy Lamp Field (BLF) and one-button access to extensions, trunks and system features. Mainly designed for operator use, the 60-button DSS console provides an additional 60 programmable keys.

- Connect this console to digital extension port at 082U of each Chassis.
- Programmable keys: 60
- Angle Adjustment: 2-steps
- Wall-Mounting kit: Built-in

2.5.15 IP4WW-WALL MOUNT UNIT

The Wall Mount Unit is used for IP7[ ]-8IPLD Terminal and IP4[ ]-24TIXH-C Terminal only.

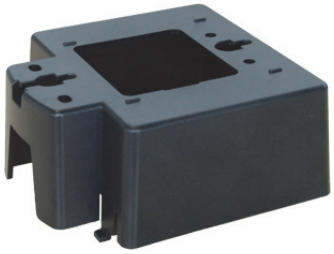

2.5.16 Wireless Headset Adapter (WHA)

The Wireless Headset Adapter allows you to connect a Plantronics Wireless Headset System directly to your IP7WW-12/24TXH-B1 telephone's headset socket. The Wireless Headset Adapter tightly integrates your headset system with the SL2100 to provide enhanced wireless mobility and call answering. The Plantronics lifter is not required.

2.5.17 DTZ-12D-3( ) (BK)/(WH) TEL

This DTZ digital value Multiline Terminal has 12 line keys and available in both black and white. The terminal features:

- Modular design
- Four step adjustable base
- Full-duplex speaker phone
- 12 line keys (Red, Green)
- Four soft keys (Help, Exit)
- Three color LED
- 168 x 58 dot matrix backlit LCD with cursor keys
- Menu/Softkey operation provided on the LCD
- Backlit 10-key dial pad for easy viewing
- Full-duplex handsfree operation

2.5.18 DTZ-24D-3( ) (BK)/(WH) TEL

This DTZ digital value Multiline Terminal has 24 line keys.
The terminal features:

- Modular design
- Four step adjustable base
- Full-duplex speaker phone
- 24 line keys (Red, Green)
- Four soft keys (Help, Exit)
- Three color LED
- 168 x 58 dot matrix backlit LCD with cursor keys
- Menu/Softkey operation provided on the LCD
- Backlit 10-key dial pad for easy viewing
- Full-duplex handsfree operation
- EHS supported with APN-91 Plantronics cable. Feature requires headset key assigned to one key between 1 ~ 24.

2.5.19 DCZ-60-2[ ] (BK/WH) CONSOLE

The DSS console gives a multiline terminal user a Busy Lamp Field (BLF) and one-button access to extensions, trunks and system features. Mainly designed for operator use, the 60-button DSS console provides an additional 60 programmable keys.

- Connect this console to digital extension port at 082U of each chassis.
- Programmable keys: 60
- Angle Adjustment: 2-steps
- Wall-Mounting kit: Built-in

2.5.20 DP-D-1A/1D/HS.D503DOR-A

This is the Doorphone Box.

- Connect to Hybrid/Analog extension port No. 6 or No. 7 on the 308U Or Analog extension port No. 1 or No. 2 on the 082U.
- Wall-Mounting kit: Built-in

SECTION 3 SYSTEM CAPACITY

3.1 System Capacity

Table 1-3 System Capacity

Number of Chassis	1 Chassis	2 Chassis	3 Chassis	Description
Number of Universal Slot	4	8	12	
Number of CPU	1			
Total System Ports (Trunk + Extension)	256			128 Trunk Ports + 128 Extensions (software)
Total Legacy Ports (Trunk + Extension)	96	176	256	Max. 80 ports per Chassis + 16ch for VM (InMail)
Trunks (Max)	36/42	72/84	108/126	1 Chassis: (082U+2BRIDB)x3 + (008U +1PRIDB) 2 Chassis: (082U+2BRIDB)x6 + (008U +1PRIDB)x2 3 Chassis: (082U+2BRIDB)x9 + (008U +1PRIDB)x3
Analog	12	24	36	Max 4pcs of 308U or 3COIDB per Chassis
ISDN BRI	16	32	48	Max 4pcs of 2BRIDB per Chassis
ISDN PRI/E1/T1 (1.5M/2M)	24/30	48/60	72/90	Max 1pc of 1PRIDB per Chassis, Max 3pcs of 1PRIDB per System
Extensions (Max)	80	112	112	1 Chassis: (082U+2BRIDB)x3 + (008U +1PRIDB) for S-point
Hybrid Extensions (4W)	24	48	72	Max 3pcs of 308U or 008U per Chassis
Digital Extensions (2W)	24	48	72	Max 3pcs of 082U per Chassis
Analog Extensions	32	64	96	Max 4pcs of 308U or 008U per Chassis
DSS Console (4W)	3	6	9	Max 3pcs of DSS Console per Chassis
DSS Console (2W)	12			Max 12pcs of DSS Console per System, connect to a Digital Ext. Port
Doorphone	6			Max 6pcs of Doorphone per System, connect to an Analog Ext. Port
VRS/VM (InMail) Channel	16			Increase the number of channels by EXIFB (4ch -> 16ch)
IP Trunks (SIP/H323)	64			Number of available trunks is decided by license
IP Extensions (IP-MLT/Std-SIP)	112			Number of available extensions is decided by license
Audio/Others				
Relay	11			308U/082U is required
Paging	3			308U/082U is required
External MOH	1			308U/082U is required
BGM	1			308U/082U is required
Ethernet Port	1			on CPU
Analog Modem	1			EXIFB is required
VRS/VM				

Number of Chassis		1 Chassis	2 Chassis	3 Chassis	Description
	Built-In VM (InMail) Channels	4			Enable to increase the number of channels by EXIFB (4ch -> 16ch)
	Built-In VRS/VM (InMail) Storage	Approx. 2 hours			Available number of VRS MSG : 100
	Built-In Voice Prompts for VRS/VM	1 language			Enable to change the language by WebPRO
	VRS/VM Storage (by SD)	Approx. 15 Hours (S) / Approx. 120 Hours (L)			S : SDVMS, L : SDVML Available number of VRS MSG : 100
	Voice Prompts for VRS/VM	26 languages			SDVM [ ]-C1 is required
VoIP					
	Built-In VoIP Channel	8			
	VoIP Channel (by VOIPDB)	128			Number of available channels is decided by license
Conference Circuits *1		32 (Max. 16 parties per Conference)			
DSP Resource *1		1 Chassis: 76(4W Hybrid MLT Mode)/ 72(2W Digital MLT Mode) 2 Chassis: 108(4W Hybrid MLT Mode)/ 104(2W Digital MLT Mode) 3 Chassis: 140(4W Hybrid MLT Mode)/ 136(2W Digital MLT Mode)			1 Chassis: CPU(28/24) + EXIFB(48) 2 Chassis: CPU(28/24) + EXIFB(48) + EXIFE(32) 3 Chassis: CPU(28/24) + EXIFB(48) + EXIFE(32) + EXIFE(32)
DSP Sender *2		128			

**1. Service Tone receiver, DTMF receiver, Caller ID sender / receiver, MF receiver, MFC receiver*

**2. Service Tone sender, DTMF sender, MF sender, MFC sender*

3.2 Chassis Capacity

System image of Chassis capacity (ISDN, Trunk, Extension) is shown as below.

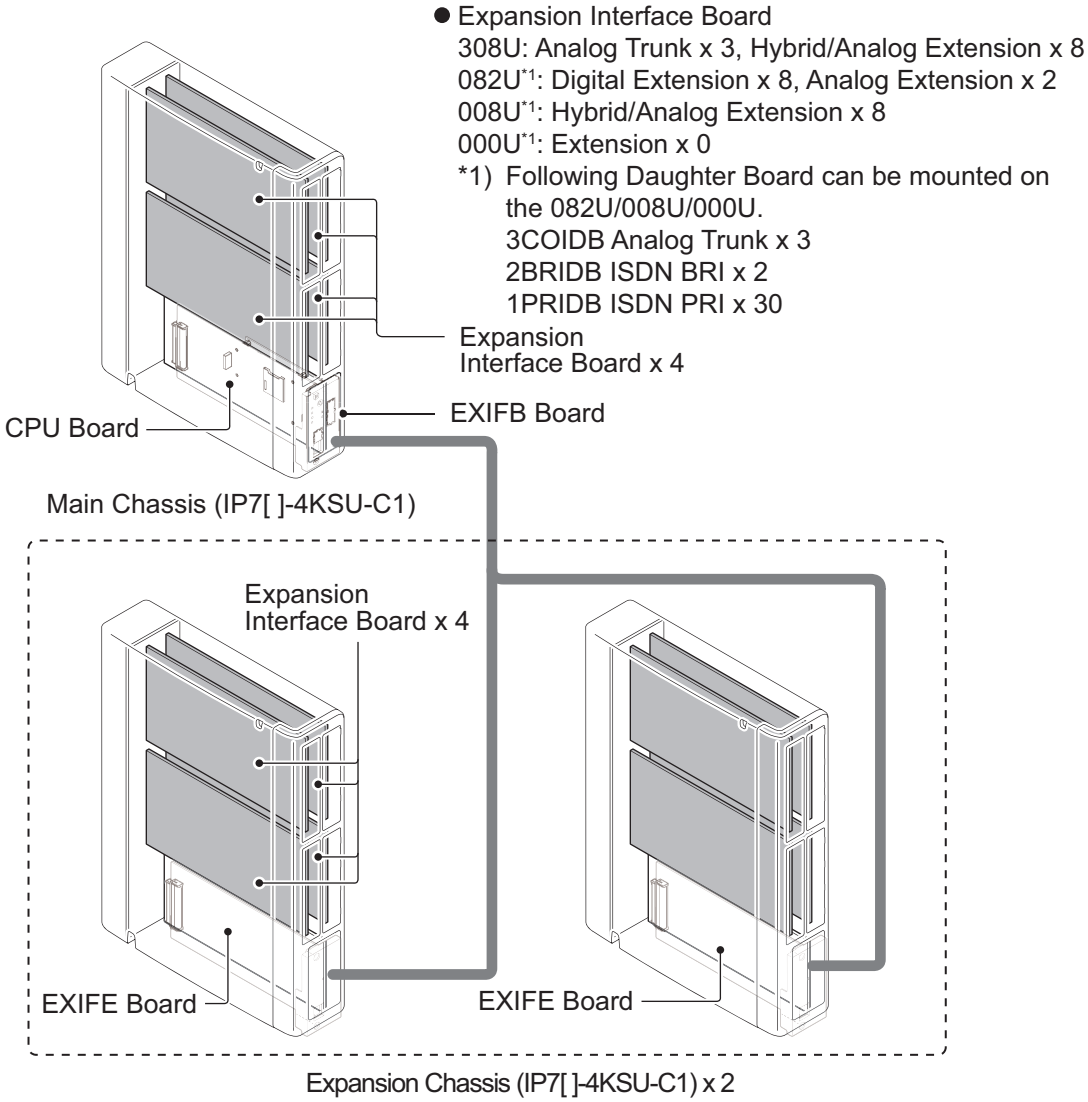

Figure 1-2 System Image

3.2.1 Expandability of Trunk and Extension (without BRI/PRT)

- **4W Hybrid Multiline Terminal Mode**

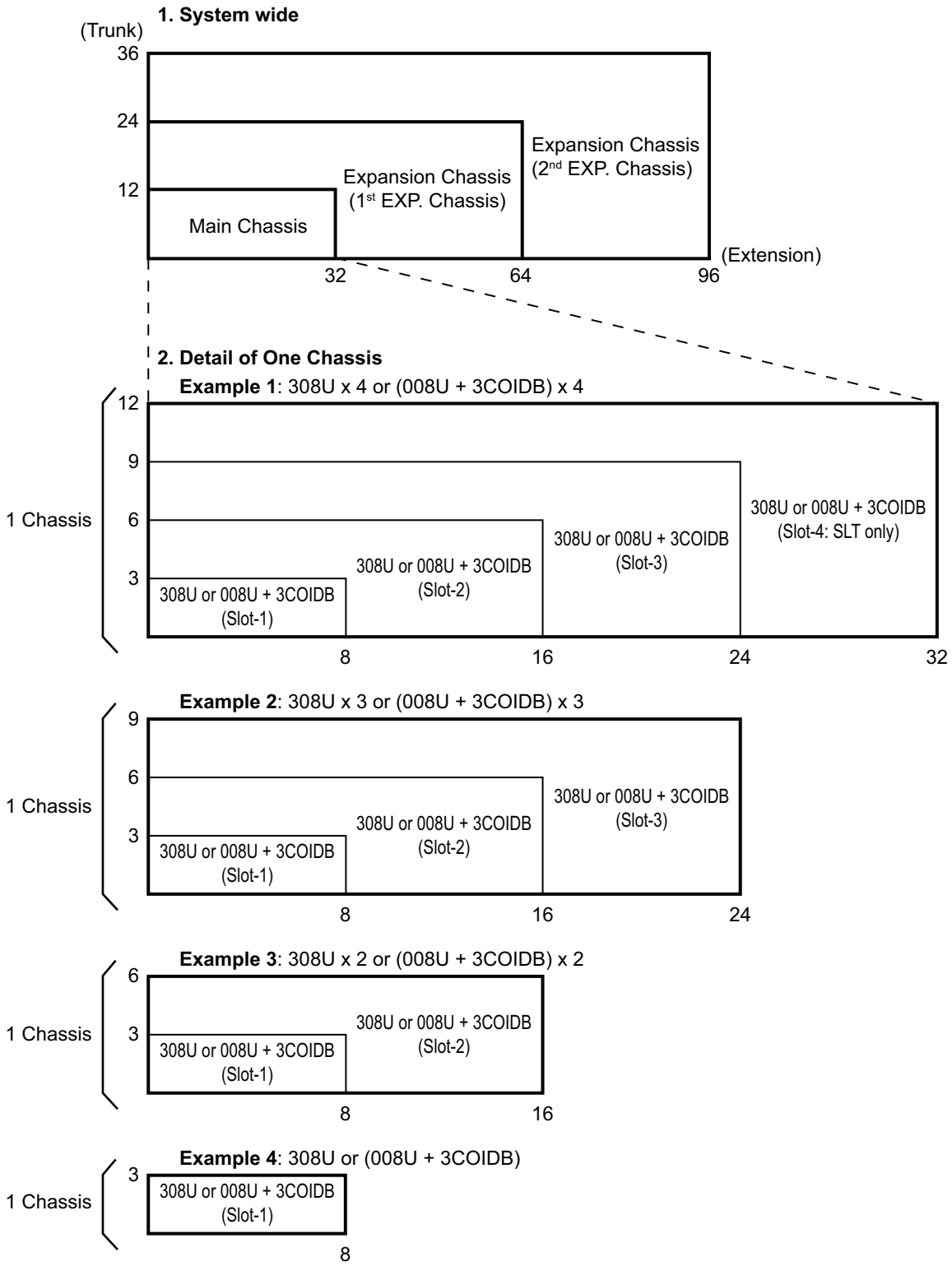

Figure 1-3 Expandability of Trunk and Extension (without BRI/PRT)

- **2W Digital Multiline Terminal Mode**

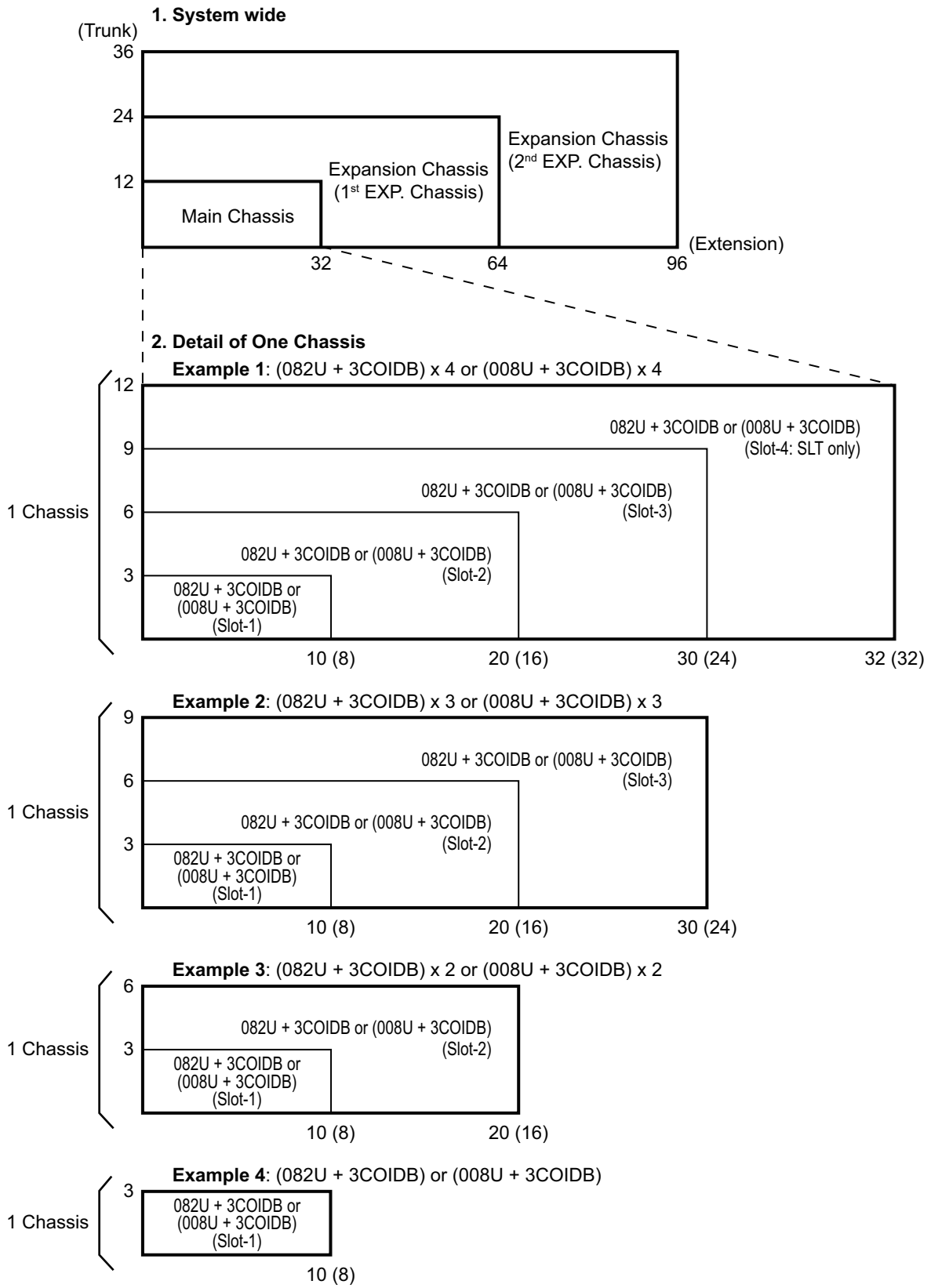

Figure 1-4 Expandability of Trunk and Extension (without BRI/PRT)

3.2.2 Expandability of Trunk and Extension (with BRI)

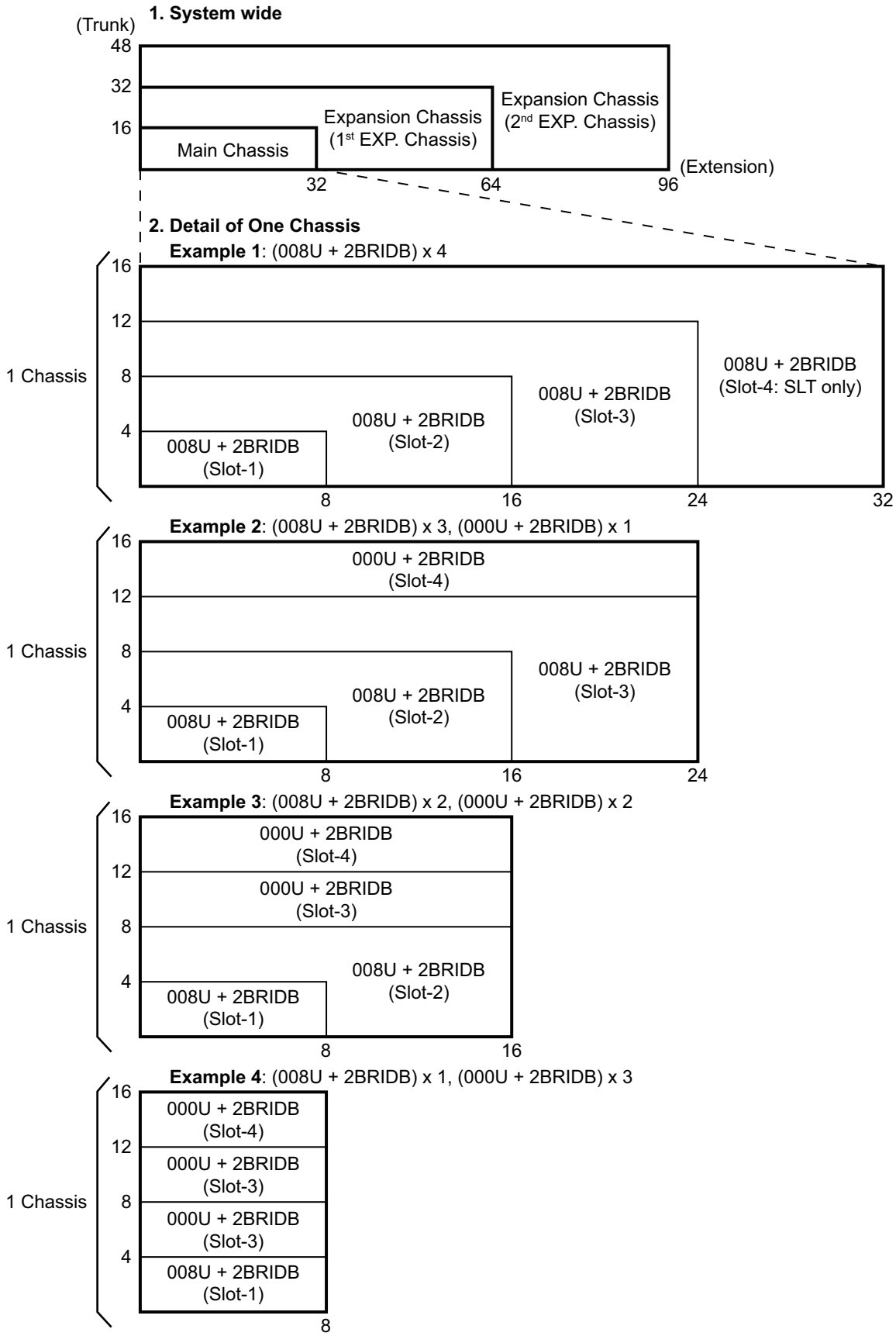

Figure 1-5 Expandability of Trunk and Extension (with BRI)

3.2.3 Expandability of Trunk and Extension (with PRT)

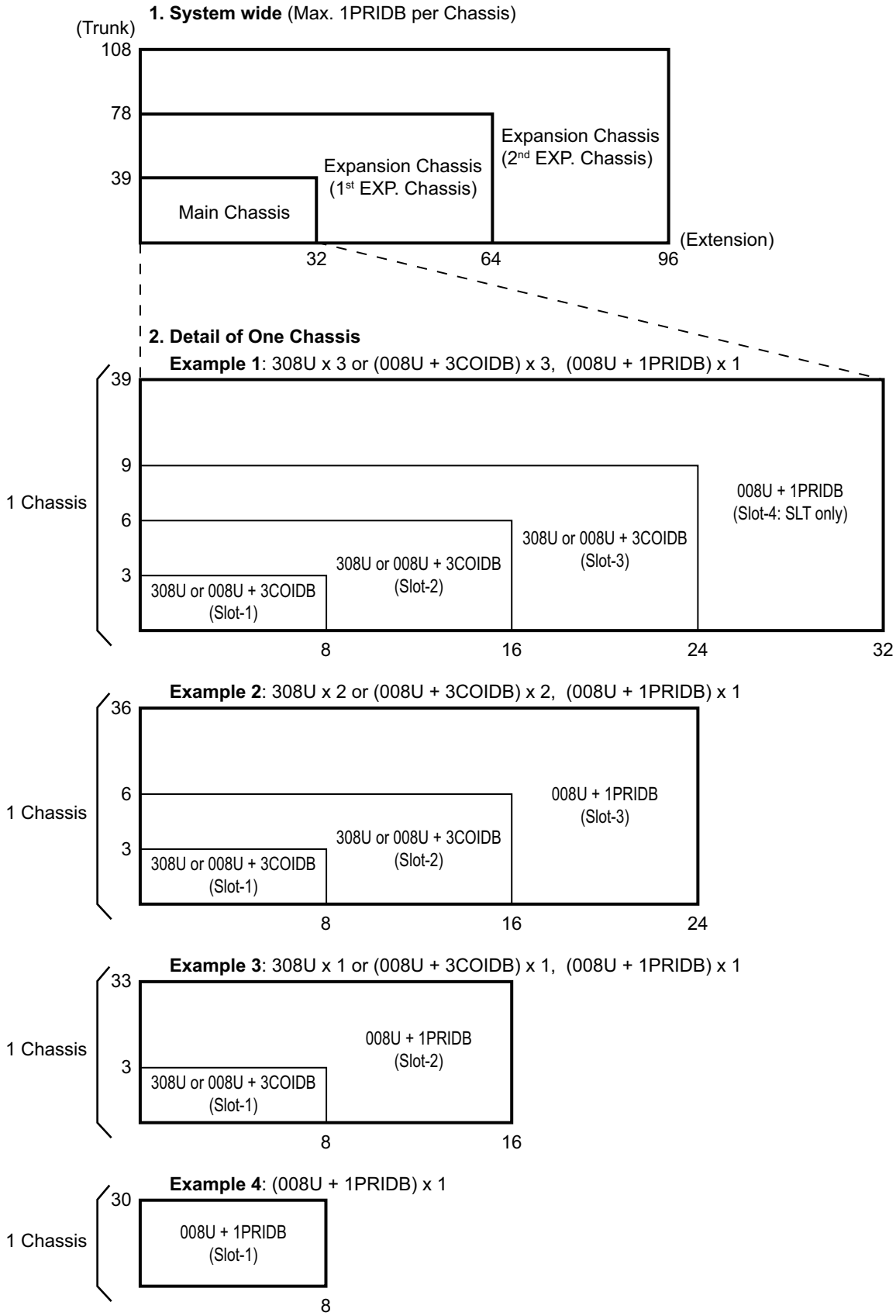

Figure 1-6 Expandability of Trunk and Extension (with PRI)

Installation

SECTION 1 INSTALLING THE MAIN & EXPANSION CHASSIS

1.1 Before Installing the Chassis

Please read following precautions carefully before installation.

1.1.1 General Precautions

- To avoid shock or equipment damage, do not plug in or turn the system power on before completing the installation process.
- Avoid working with the Equipment during electrical storms.
- Use only commercial AC power to prevent shock or fire.
- Use the power cord supplied with the Chassis.
- Install batteries with the correct polarity to prevent damaging equipment.
- Never install telephone wiring during a lightning storm.
- Never install telephone jacks in wet locations unless the jack is specifically designed for wet locations.
- Never touch uninsulated telephone wires or terminals unless the telephone line is disconnected at the network interface.
- To avoid damage, the Chassis should not be placed on unstable surfaces.
- To avoid damage the Plastic parts, never use an Electric Screw Driver to tighten the screws.
- To prevent overheating, do not bundle AC power cords together.
- Make sure the Chassis has proper Earth ground.
- If Expansion Chassis are installed, turn the power on/off in the following order:
  Expansion 2 Chassis, Expansion 1 Chassis and then Main Chassis

The system does NOT ALLOW to accommodate both Digital (2W) and Hybrid (4W) Multiline Terminal at the same time on a system.
Type of available Multiline Terminals shall be defined whether 082U board can be detected at Main Chassis or not during the system start-up in progress by COLD start.

Not all boards are hot swappable. Do not remove or install from the chassis when powering up.

1.1.2 Preparations

- The following tools will be required when installing hardware into an SL2100.
  - Screw driver set
  - Side cutters to cut out knockouts
  - Pliers for removing daughter board stand offs
  - Screw driver socket 5 mm for EXIFB-C1 board

- Make sure you have a building plan showing common equipment, extensions, the telecom demarcation, and earth ground location. The installation site must meet the following site / environmental requirements.

1.1.3 Site Requirements

Each Main or Expansion Chassis can have the optional Battery Box (IP4WW-Battery Box) connected, before deciding on the mounting location refer to Figure 2-8 Horizontal Arrangement of the Chassis on page 2-8 and INSTALLING THE EXTERNAL BACKUP BATTERY on page 2-22.

- The system without the IP4WW-Battery Box should be wall-mounted only. The chassis can not be mounted to the IP4WW-Battery Box. The IP4WW-Battery Box can be installed on either the floor or wall (horizontally). Ensure enough space exists to allow the installation of additional Chassis and/or battery box.
- A dedicated 100V-120V/220V/230V/240VAC circuit located within two meters of the Chassis is required. A separate dedicated AC outlet is necessary for each Chassis.

1.1.4 Environmental Requirements

Meeting established environmental standards maximizes the life of the system. Make sure that the site is not:

- In direct sunlight or in hot, cold or humid places.
- In dusty areas or in areas where sulfuric gases are produced.
- In places where shocks or vibrations are frequent or strong.
- In places where water or other fluids comes in contact with the equipment.
- In areas near high-frequency machines or electric welders.
- Near computers, telexes, microwaves, air conditioners, etc.
- Near radio antennas (including shortwave).

1.1.5 Unpacking

Table 2-1 Chassis Packing List

Items	List of Contents	QTY
IP7[ ]-4KSU-C1	4KSU-C1 Chassis	1
	AC Power Cord (AC Power Cord is not attached for IP7WW-4KSU-C1 w/o C type)	1
	Screws (M4.1x25)	4
	Wall-Mounting Template	1

1.2 Installing the Main Chassis (IP7[ ]-4KSU-C1)

A Chassis has one CPU/EXIFE board slot and four universal slots for legacy line/trunk board. When the CPU-C1 board is installed in the first chassis, it is called the main chassis. Additional chassis, called expansion chassis.

An Expansion Chassis can be added increasing system capacity. Each Chassis (Main or Expansion) is powered by its own power supply.

For the detail of LED (RUN, ALM), refer to Table 4-1 CPU LED Indications on page 4-15.

1.3 CPU Board (IP7[ ]-CPU-C1)

1.3.1 Unpacking

Unpack the CPU board and check it against the following list. Inspect for physical damage.

Table 2-2 CPU Packing List

Items	List of Contents	QTY
IP7[ ]-CPU-C1	CPU Board	1
	Lithium Battery	1

1.3.2 Connectors Location

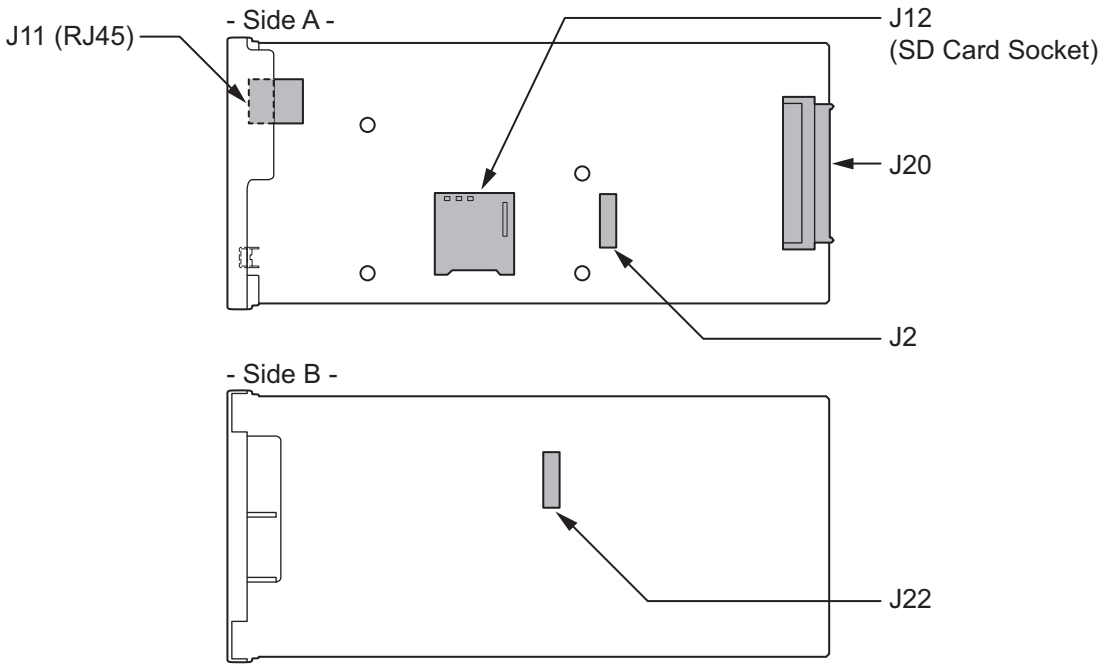

Figure 2-1 Connectors of CPU-C1

Table 2-3 Connectors of CPU-C1

No.	Connectors	Connectable Devices
J2	VOIPDB-C1	J1 connector on the VOIPDB-C1
J11	LAN (RJ45)	Ethernet connector
J12	SD Card	SD card slot (for expand VRS/VM storage or maintenance)
J20	Back Plane Board	Connector on the Back Plane Board
J22	EXIFB-C1	J3 Connector on the EXIFB-C1

1.3.3 Installing the CPU Board (IP7[ ]-CPU-C1)

Not all boards are hot swappable. Do not remove or install from the chassis when powering up.

Do Not Power on until all installations have been completed.

1. Turn off the system power.
2. Refer to following figure for the Lithium battery location on the CPU board.

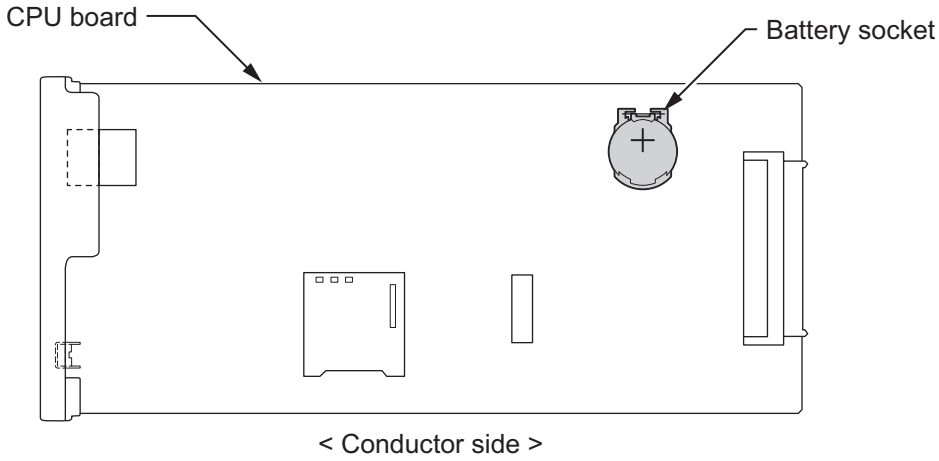

Figure 2-2 Location of Lithium Battery Socket

3. Insert the supplied lithium battery into the socket.

The polarity "+" symbol must be on top as illustrated in following figure.

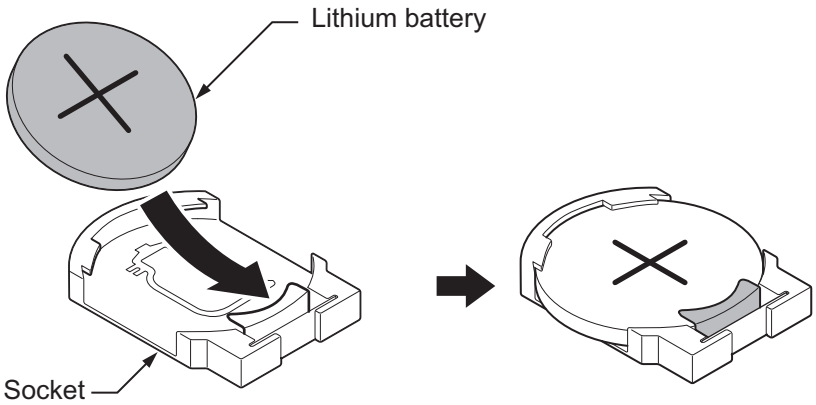

Figure 2-3 Inserting the Lithium Battery

4. Insert the CPU board in the guide rail of Main Chassis and push it securely into position and tighten the two screws of CPU board.

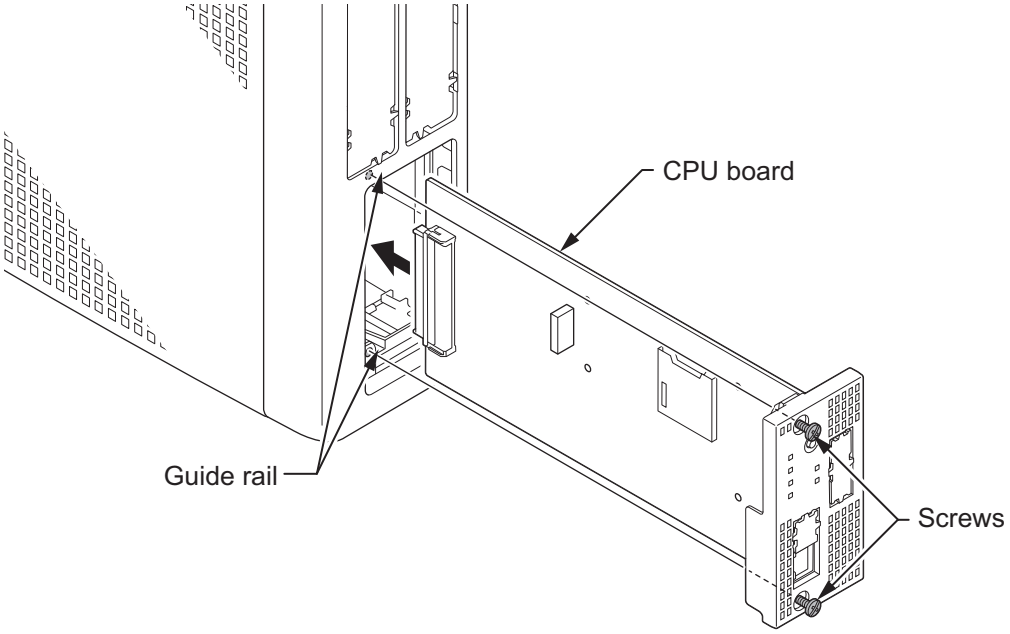

Figure 2-4 Insert the CPU Board

1.3.4 Connector and Switch

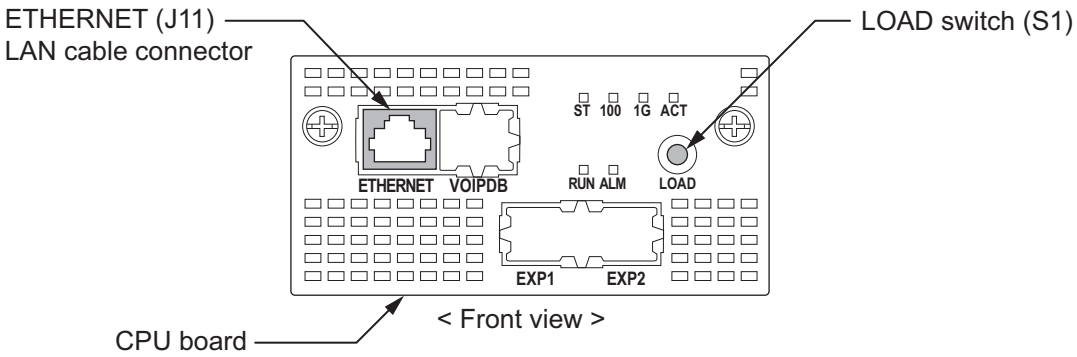

Figure 2-5 Connector and Switch Location on the CPU Board

Table 2-4 Items on the CPU Board

Item	Description
LOAD Switch (S1)	Switch for System Restart/System Reset (Cold start occurs)/Upload Software

Item	Description	
ETHERNET (J11: RJ45) 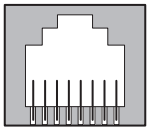	Ethernet Cable Connection (for SMDR (PC, Printer), PCPro or WebPro….etc)	
	Pin No.	**Pin Function**
	1	Tx+
	2	Tx-
	3	Rx+
	4	-
	5	-
	6	Rx-
	7	-
	8	-

1.4 Chassis Dimensions

For Dimensions of the Chassis, refer to Figure 2-6 Dimension of the Main and Expansion Chassis on page 2-6.

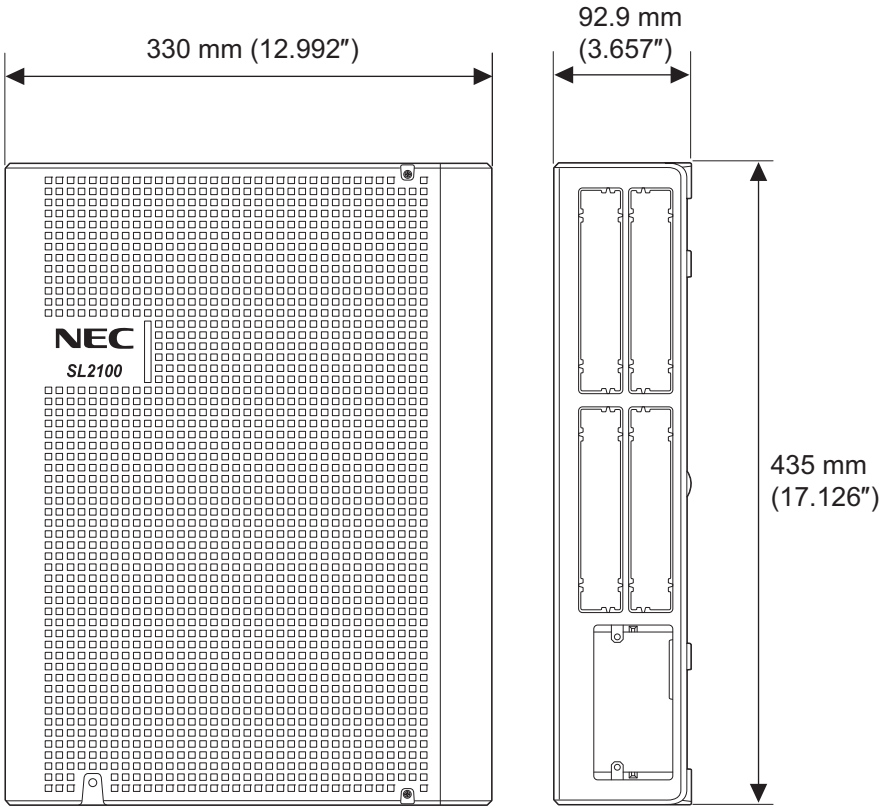

Figure 2-6 Dimension of the Chassis

1.5 Wall-Mounting the Chassis

To prevent damage, choose a safety area to install the chassis even if the chassis is fall down from the wall.

1.5.1 Wall Installation of Chassis

The Main Chassis and Expansion Chassis can be mounted on the wall. Before installing, ensure the appropriate spacing exists as shown below.

Due to the limit of extension cable length to connect Main Chassis and Expansion Chassis, the install location of Main Chassis and each Expansion Chassis must be considered as above or as *Figure 2-8 Horizontal Arrangement of Chassis on page 2-8*.

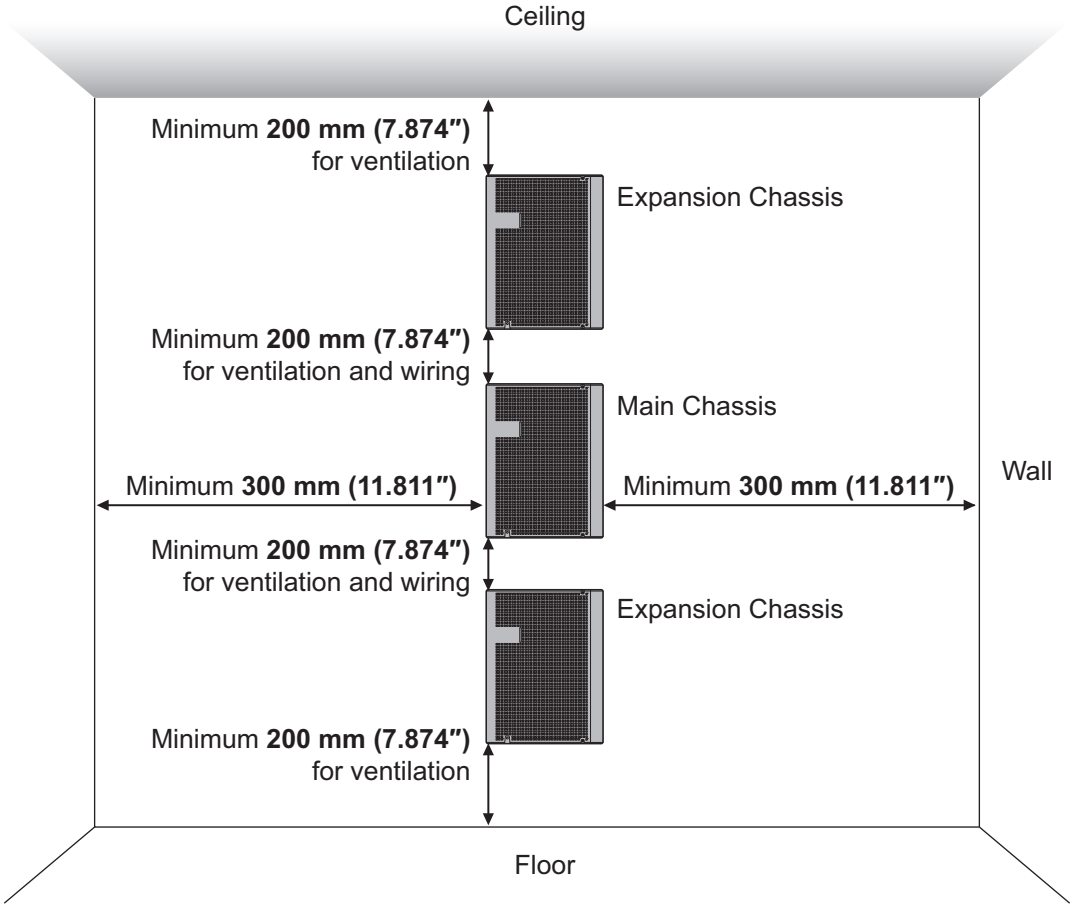

Figure 2-7 Vertical Arrangement of Chassis

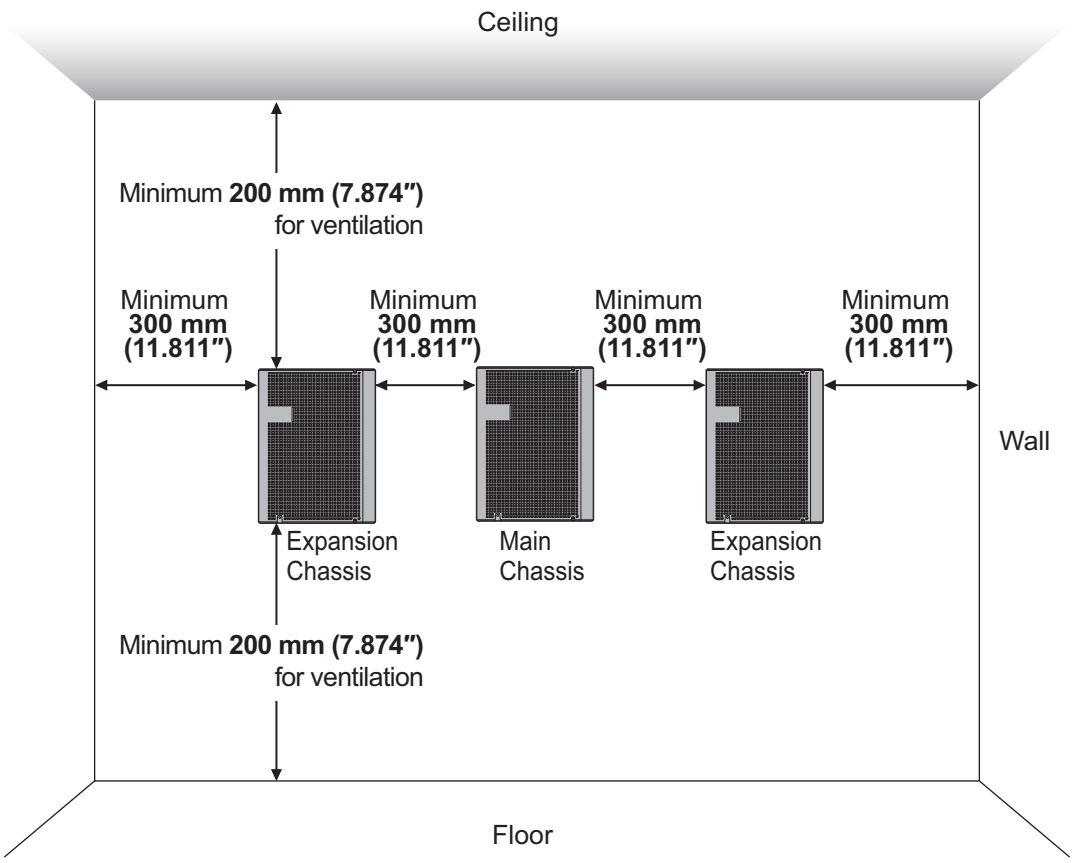

Figure 2-8 Horizontal Arrangement of Chassis

Due to the limit of extension cable length to connect Main Chassis and Expansion Chassis, the install location of Main Chassis and each Expansion Chassis must be considered as Figure 2-8 Horizontal Arrangement of Chassis on page 2-8.

1.5.2 Mounting Procedure of Chassis

1. Place the attached template on the wall to mark the four screw positions.

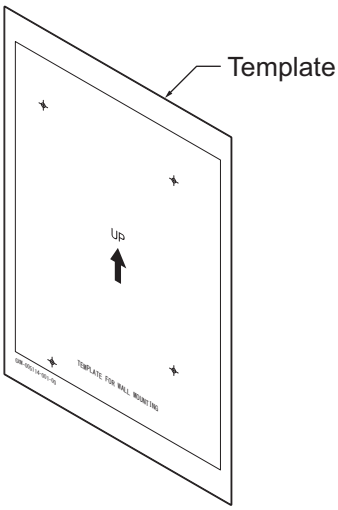

Figure 2-9 Wall-Mounting Template

2. Install three screws into the wall. The screw heads must stand off from the wall about 2.5 mm (0.098″) to 3.5 mm (0.138″).

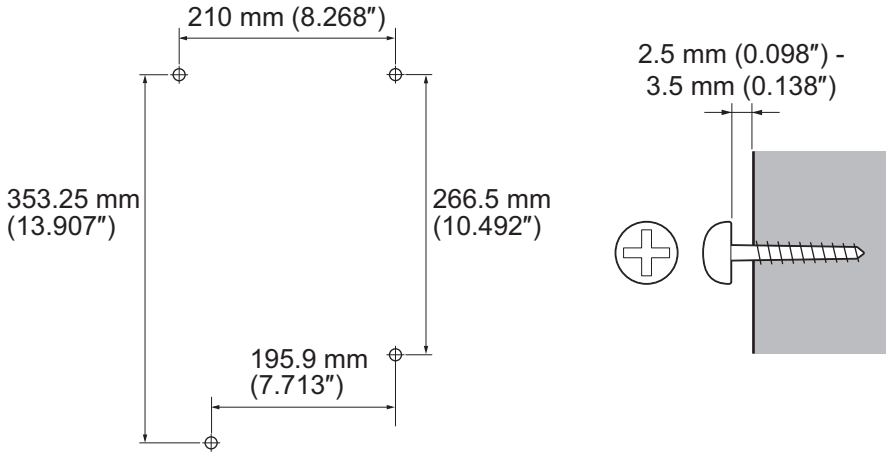

Figure 2-10 Screw Positions

- The screw diameter is 4 mm (0.158″) to 4.5 mm (0.177″).
- Wall-Mounting Screws (M4.1x 25: 4 pcs) are attached to the Chassis.

The other screw is installed after slide the chassis into the position.

3. Align the three holes on the back of the Chassis with the three screws installed in the wall.

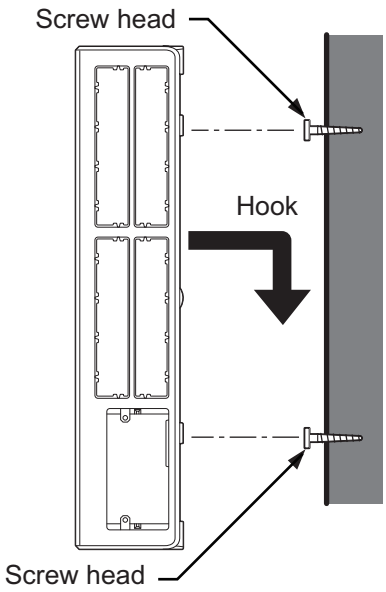

Figure 2-11 Mounting the Chassis

4. Tighten the other screw at the lower left after slide the chassis into the wall.

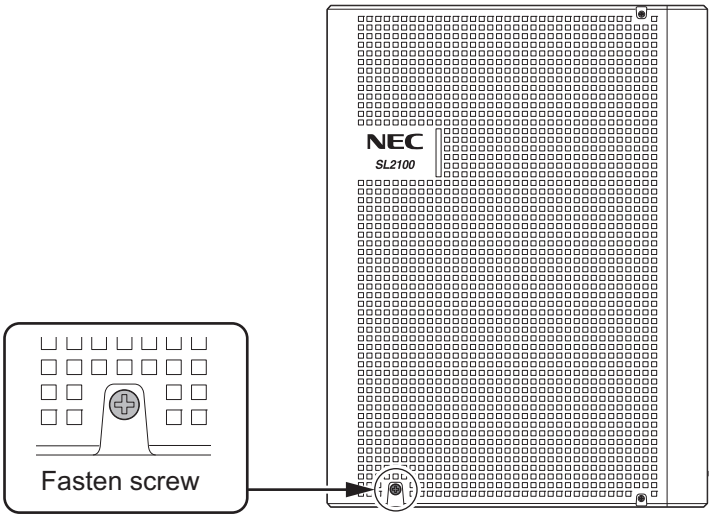

Figure 2-12 Fixing the Chassis

1.5.3 Wall Mounting the Chassis and the Backup Battery (IP4WW-Battery Box)

For the details of IP4WW Battery Box installation, refer to INSTALLING THE EXTERNAL BACKUP BATTERY on page 2-22.

Vertical Arrangement of Chassis and Battery Boxes

For Wall Mounting the Chassis and the IP4WW-Battery Box, refer to Figure 2-13 Vertical Arrangement of Chassis and Battery Boxes on page 2-11.

Due to the limit of extension cable length to connect Main Chassis and Expansion Chassis, the install location of Main Chassis and each Expansion Chassis must be considered as Figure 2-13 Vertical Arrangement of Chassis and Battery Boxes on page 2-11.

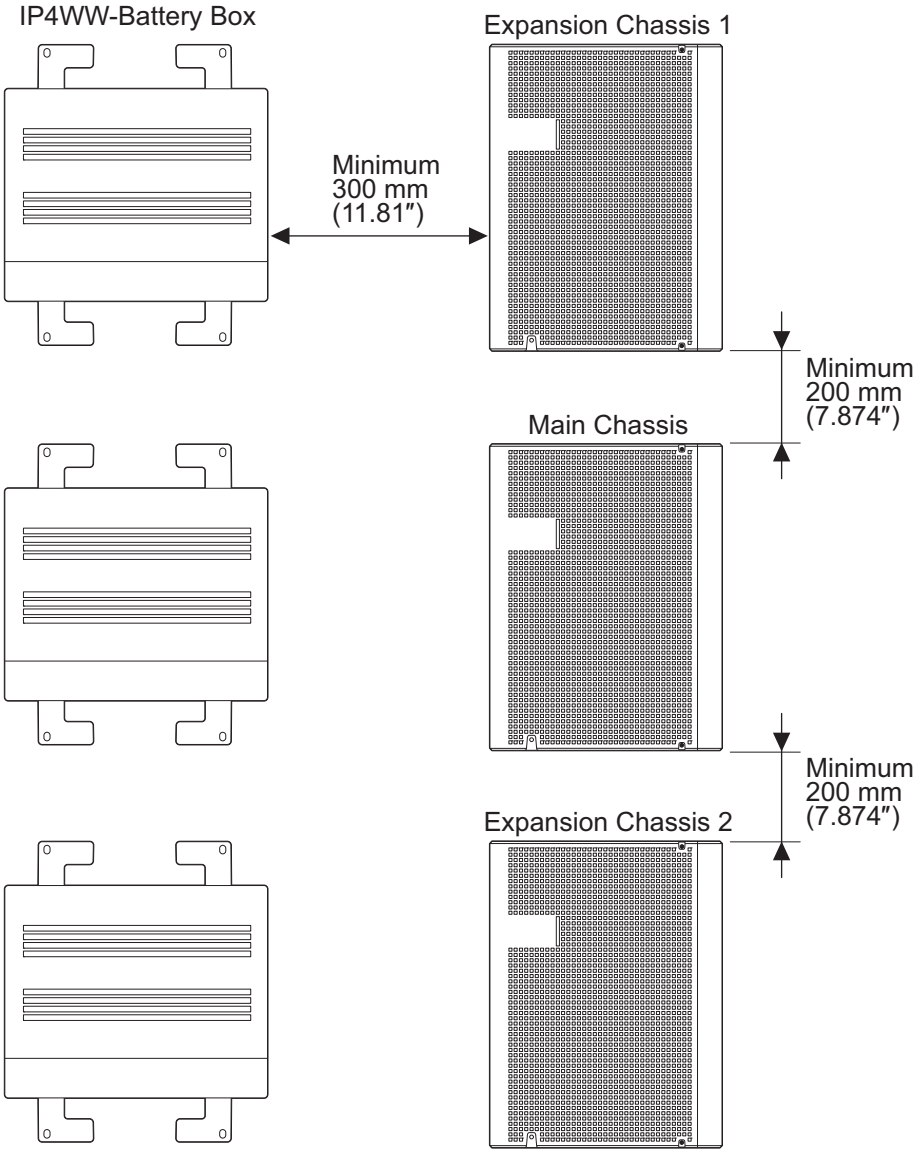

Figure 2-13 Vertical Arrangement of Chassis and Battery Boxes

Horizontal Arrangement of Chassis and Battery Boxes

For Wall Mounting the Chassis and Floor Mounting the IP4WW-Battery Box, refer to Figure 2-14 Horizontal Arrangement of Chassis and Battery Boxes on page 2-12.

Due to the limit of extension cable length to connect Main Chassis and Expansion Chassis, the install location of Main Chassis and each Expansion Chassis must be considered as above or as Figure 2-14 Horizontal Arrangement of Chassis and Battery Boxes on page 2-12.

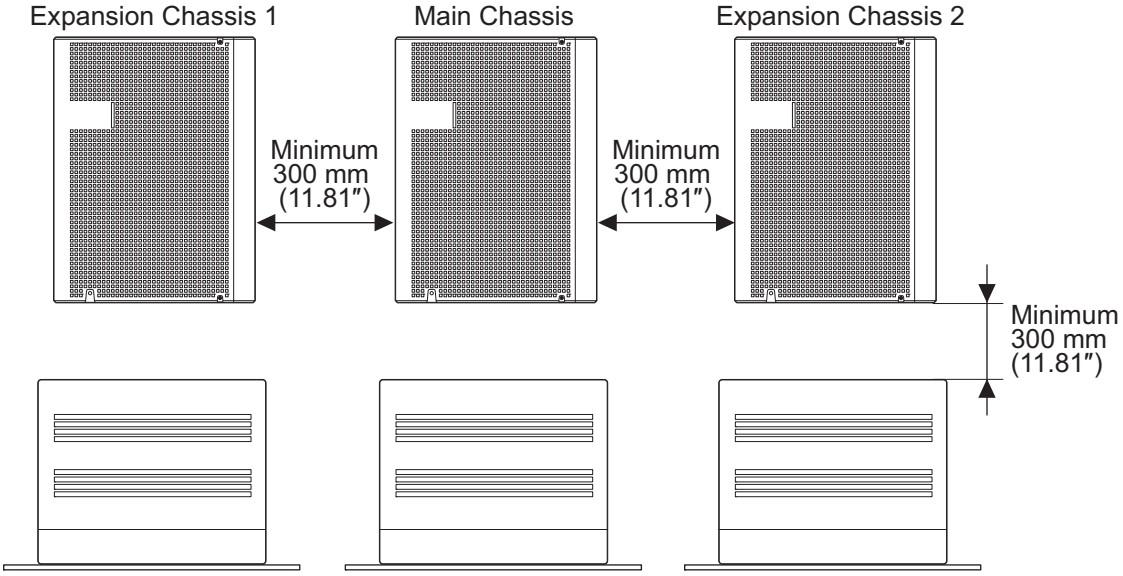

Figure 2-14 Horizontal Arrangement of Chassis and Battery Boxes

1.6 Rack Mounting the Chassis

Main or Expansion chassis can be put into 19 inch rack using a shelf plate one by one refer to Figure 2-15 Rack Mounted Chassis on page 2-12.

If the system required two or three chassis simultaneously put on the shelf plate of 19 inch rack, the space must be required between chassis for heat ventilation.

Do not stack two or three chassis per one shelf plate.

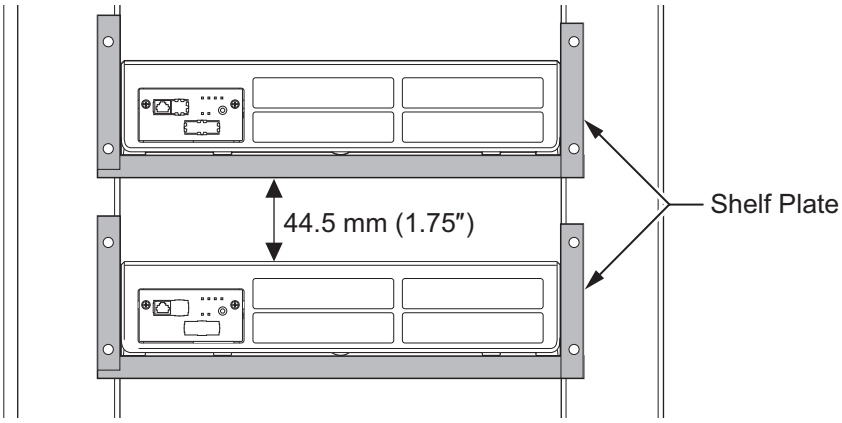

Figure 2-15 Rack Mounted Chassis

1.7 Installing the Expansion Chassis

1.7.1 General

Each Expansion Chassis is connected to the Main Chassis individually. The EXIFB-C1 board must be installed on the CPU board in the Main Chassis. And the EXIFE-C1 board must be installed on the Each Expansion Chassis.

1.7.2 Installation of the EXIFB-C1

1.7.2.1 Unpacking

Unpack the EXIFB-C1 and check it against physical damage.

Table 2-5 EXIFB-C1 Packing List

Items	List of Contents	QTY
EXIFB-C1	EXIFB-C1 Board	1
	Metal Spacers	4
	Screws (with Circular Washer)	4
	Springwashers	4
	Nuts	4

1.7.2.2 Connectors Location

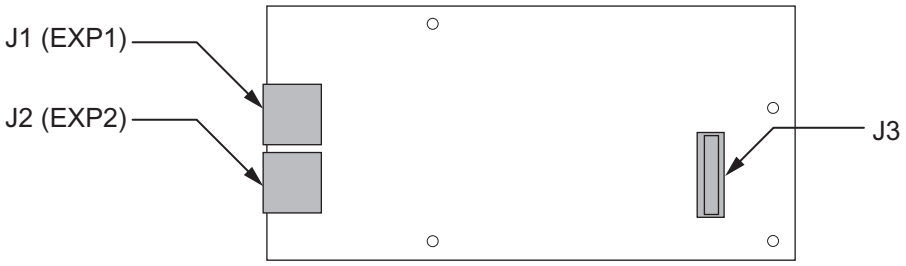

Figure 2-16 Connectors of EXIFB-C1

Table 2-6 Connectors of EXIFB-C1

No.	Connectors	Connectable Devices
J1 (EXP1)	Expansion Connector	J2 (EXP) connector on the EXIFE-C1 board of the Expansion Chassis 1
J2 (EXP2)	Expansion Connector	J2 (EXP) connector on the EXIFE-C1 board of the Expansion Chassis 2
J3	CPU Board	J22 connector on the CPU-C1

1.7.2.3 Installing the EXIFB-C1 Board

Not all boards are hot swappable. Do not remove or install from the chassis when powering up.

Do Not Power on until all installations have been completed.

1. Turn off the system power.

2. Loosen two screws and pull out the CPU board.

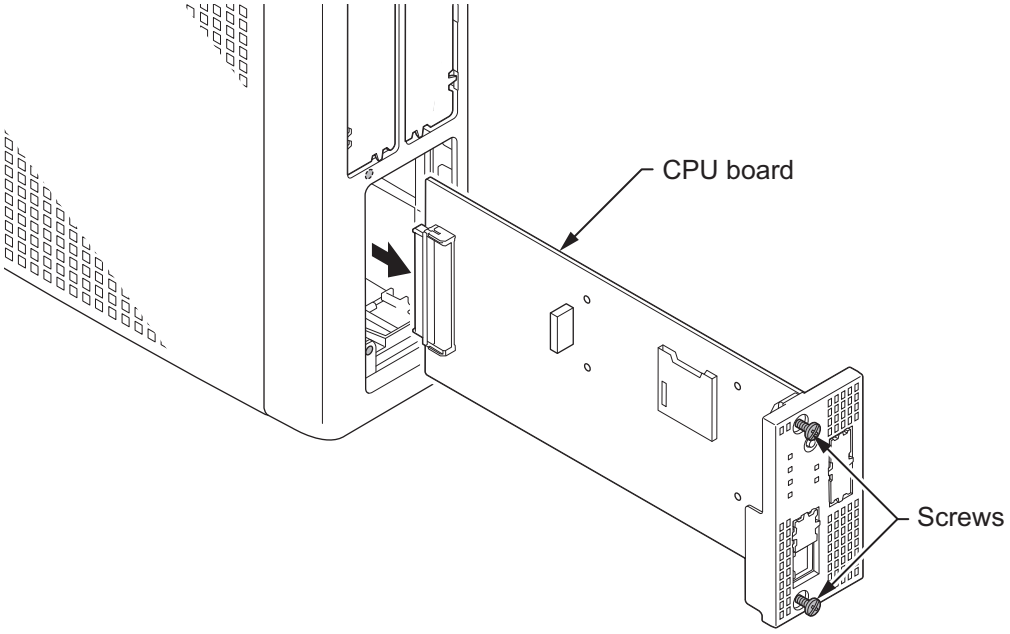

Figure 2-17 Removing the CPU Board

3. Cut and remove the Plastic Knockouts.

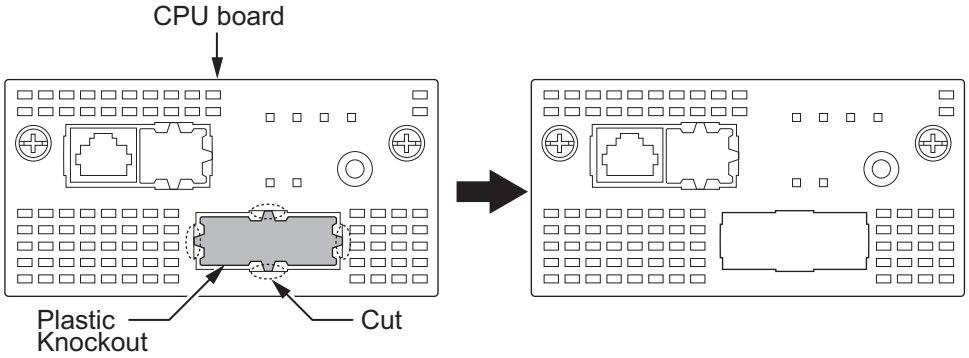

Figure 2-18 Removing the Plastic Knockouts

4. Mount the EXIFB-C1 daughter board onto the CPU board using four Metal Spacers, four spring washers, four screws and four nuts.
   To install the EXIFB-C1 daughter board:
   1. Four Metal spacers, nuts, spring washers and screws are included with the EXIFB-C1 daughter board. Install the metal spacers through the CPU-C1 board using four nuts and spring washers.
   2. Position the EXIFB-C1 J3 connector over the J22 connector on the CPU-C1 board. Press the CPU-C1 board and EXIFB-C1 daughter board together.
   3. Screw the EXIFB-C1 daughter board using four screws. (refer to Figure 2-19 EXIFB-C1 Board Installation on page 2-15)

Be careful not to damage the components on the CPU board and EXIFB daughter board when installing.

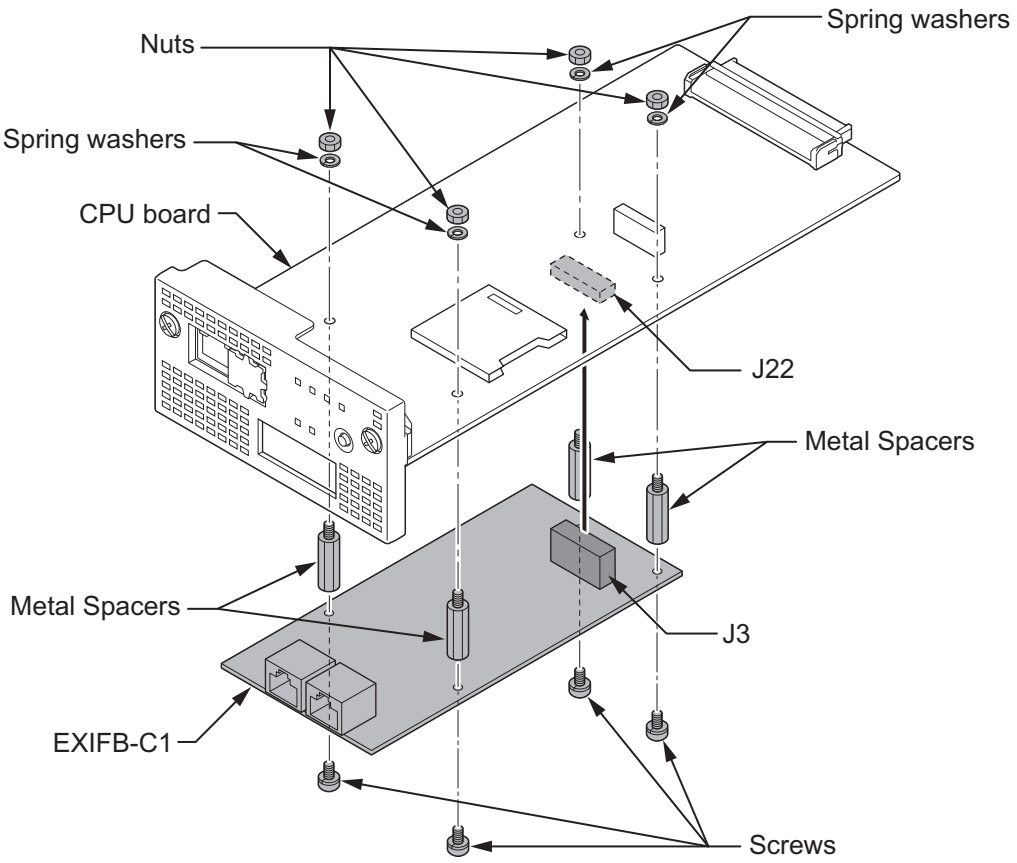

Figure 2-19 EXIFB-C1 Board Installation

5. Insert the CPU board in the guide rail of Main Chassis and push it securely into position, and tighten the two screws.

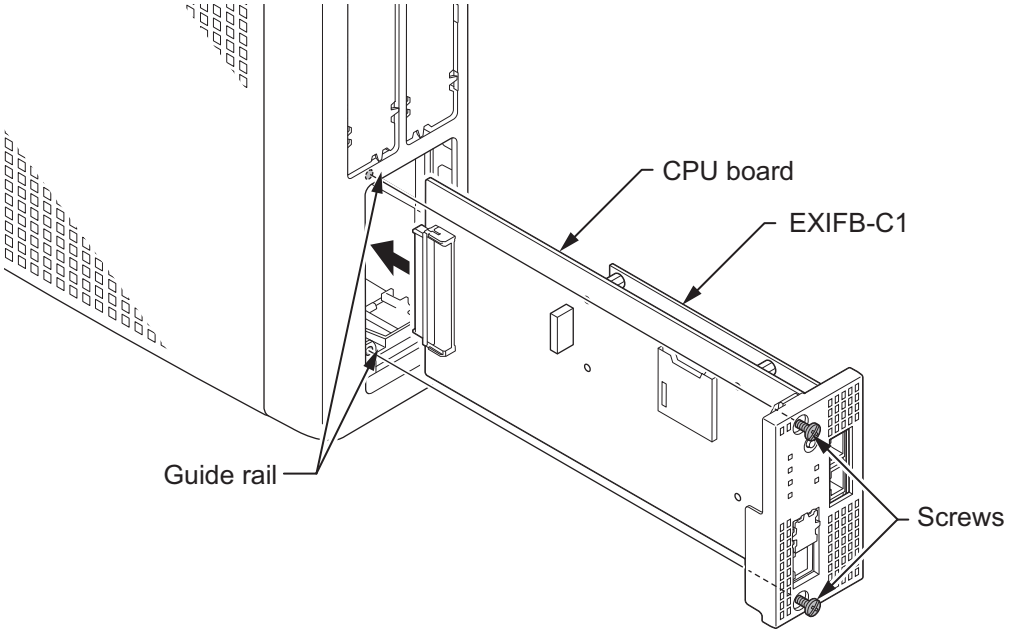

Figure 2-20 Insert the CPU Board

1.7.3 Installation of the EXIFE-C1

1.7.3.1 Unpacking

Unpack the EXIFE-C1 and check it against physical damage.

Table 2-7 EXIFE-C1 Packing List

Items	List of Contents	QTY
EXIFE-C1	EXIFE-C1 Board	1
	Expansion Cable	1
	Ferrite Core (North America use only.)	1

1.7.3.2 Connectors Location

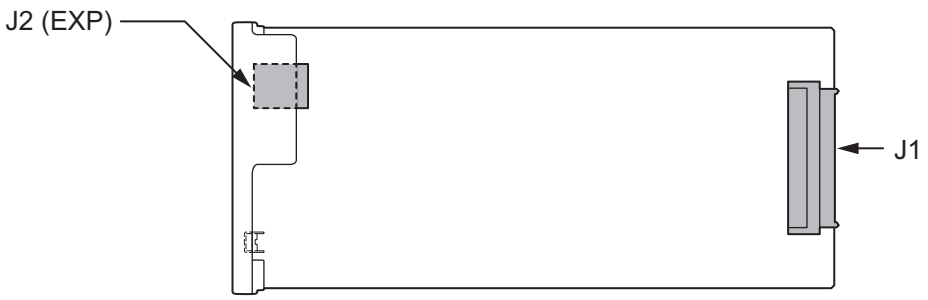

Figure 2-21 Connectors of EXIFE-C1

Table 2-8 Connectors of EXIFE-C1

No.	Connectors	Connectable Devices
J1	Back Plane Board	Connector on the Back Plane Board
J2 (EXP)	Expansion Connector	J1 (EXP1) or J2 (EXP2) connector on the EXIFB-C1 board of the Main Chassis

1.7.3.3 Installing the EXIFE-C1 Board

Not all boards are hot swappable. Do not remove or install from the chassis when powering up.

Do Not Power on until all installations have been completed.

1. Turn off the system power.
2. Insert the EXIFE-C1 board in the guide rail of Expansion Chassis and push it securely into position and tighten the two screws of EXIFE board.

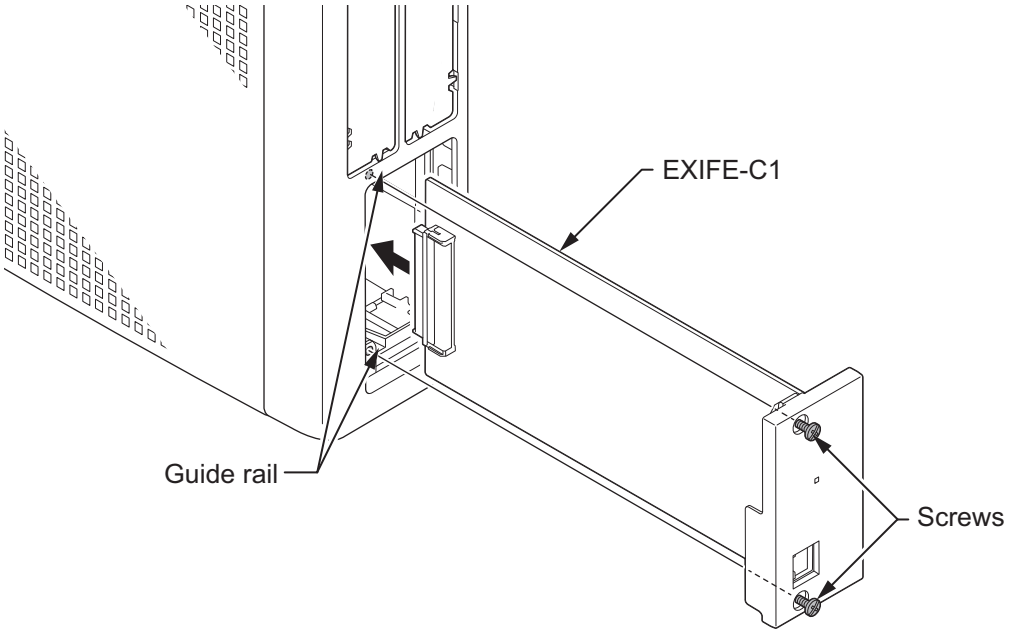

Figure 2-22 Insert the EXIFE-C1 Board

1.7.4 Chassis Inter-connection

1. Connect the Main Chassis and Expansion Chassis using the NEC provided CAT5 straight-through cable, attached to the EXIFE-C1 board.
   Attach one end to each Expansion Chassis EXT connector on the EXIFE board (see Figure 2-23 System Expansion Cabling on page 2-18). Attach the opposite end to the EXP1, EXP2 connector on the EXIFB of the Main Chassis.

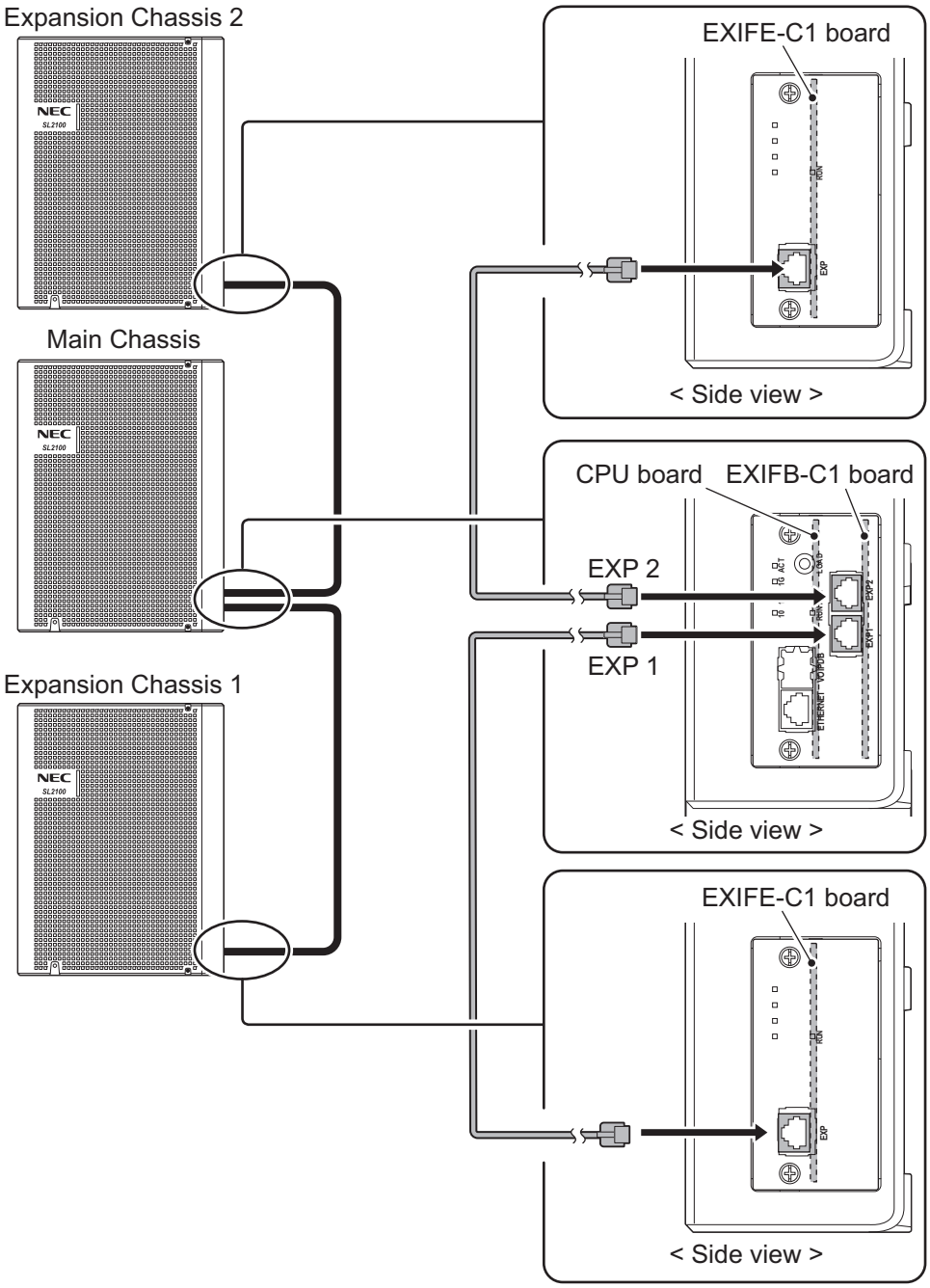

Figure 2-23 System Expansion Cabling

1.8 Grounding and AC Cabling

The ETH (Earth Ground Lug) is located near the AC power inlet on each Chassis.

1.8.1 Grounding the Chassis

Ensure all Main and Expansion Chassis are powered off and unplug the AC cord.

In each Chassis, connect the ETH lug to the verified grounding point using a minimum cable size of 14AWG (Φ2.0 mm) wire.

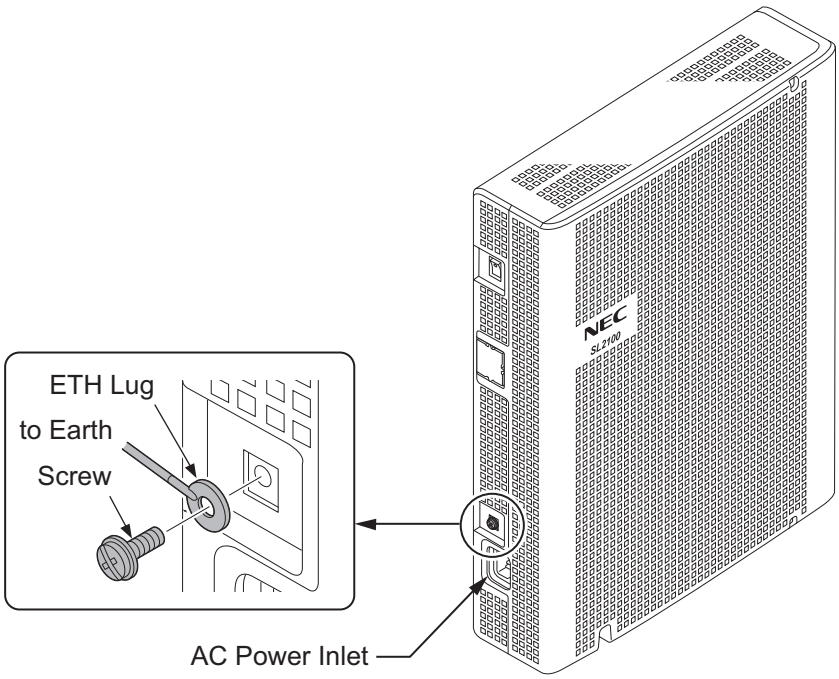

Figure 2-24 ETH Lug

- The grounding cable is supplier-provided.(not attached to the system)

Each chassis in the system must be grounded separately using the procedure listed below.

1. Loosen the screw.
2. Insert a grounding wire (user supplied).
3. Tighten the screw.
4. Connect the grounding wire to earth ground.

Proper grounding is very important to protect the system from external noise and to reduce the risk of electrocution in the event of a lightning strike.

1.8.2 AC Power Requirement

A dedicated 100V-120V/220V/230V/240V 50/60Hz circuit located within two meters of the Chassis is required. A separate dedicated AC outlet is necessary for each Chassis.

Double Pole/Neutral Fusing
(Power supply fuses are located at both the L and N side.)

Table 2-9 Power Requirement

	110VAC	120VAC	220VAC	230VAC	240VAC
Power Requirement	110 VAC@15 A	120 VAC@15 A	220 VAC@15 A	230 VAC@15 A	240 VAC@15 A

	110VAC	120VAC	220VAC	230VAC	240VAC
Power Consumption	Main Chassis = 143 VA	Main Chassis = 150 VA	Main Chassis = 185 VA	Main Chassis = 182 VA	Main Chassis = 182 VA
	3 Chassis Total = 429 VA	3 Chassis Total = 450 VA	3 Chassis Total = 541 VA	3 Chassis Total = 545 VA	Chassis Total = 547 VA
Input Voltage (Rated Voltage)	90 VAC to 264 VAC (100VAC/120VAC/220VAC/230VAC/240VAC)				
Frequency	47 Hz - 63 Hz (Rated Frequency: 50/60 Hz)				
Phase and Wire	Single Phase, 2 Line + PE Type				
Ground Requirement	No.14 AWG Copper Wire				
Feeding Voltage	SLT: 20 mA/ -27 V				
AC Input I	Main Chassis = 1.43 A 3 Chassis Total = 4.29 A	Main Chassis = 1.25 A 3 Chassis Total = 3.75 A	Main Chassis = 0.82 A 3 Chassis Total = 2.46 A	Main Chassis = 0.79 A 3 Chassis Total = 2.37 A	Main Chassis = 0.76 A 3 Chassis Total = 2.28 A
KWh	Main Chassis = 0.143 KWh 3 Chassis Total =0.429 KWh	Main Chassis = 0.150 KWh 3 Chassis Total =0.450 KWh	Main Chassis = 0.185 KWh 3 Chassis Total =0.541 KWh	Main Chassis = 0.182 KWh 3 Chassis Total =0.545 KWh	Main Chassis = 0.182 KWh 3 Chassis Total =0.547 KWh
BTU (KWh x 3413)	Main Chassis = 488 BTU 3 Chassis Total =1464 BTU	Main Chassis = 512 BTU 3 Chassis Total =1536 BTU	Main Chassis = 631 BTU 3 Chassis Total =1894 BTU	Main Chassis = 621 BTU 3 Chassis Total =1863 BTU	Main Chassis = 621 BTU 3 Chassis Total =1863 BTU

1.8.3 AC Power Cord

The AC power switch and AC power inlet are located at the back side of each Chassis. The AC power cord is connected to the AC inlet and the commercial AC power socket.

Before connecting the AC power cord, make sure:

- ***The power switch at the back side of each Chassis is turned OFF.***
- ***The power switch at the commercial AC power socket is turned OFF.***
- ***The AC plug fits the commercial AC power socket. The plug adapter is necessary if it does not fit.***
- ***To prevent damage, do not use a hammer to connect the AC power cord to AC power jack on the chassis, it must be connected by hand.***

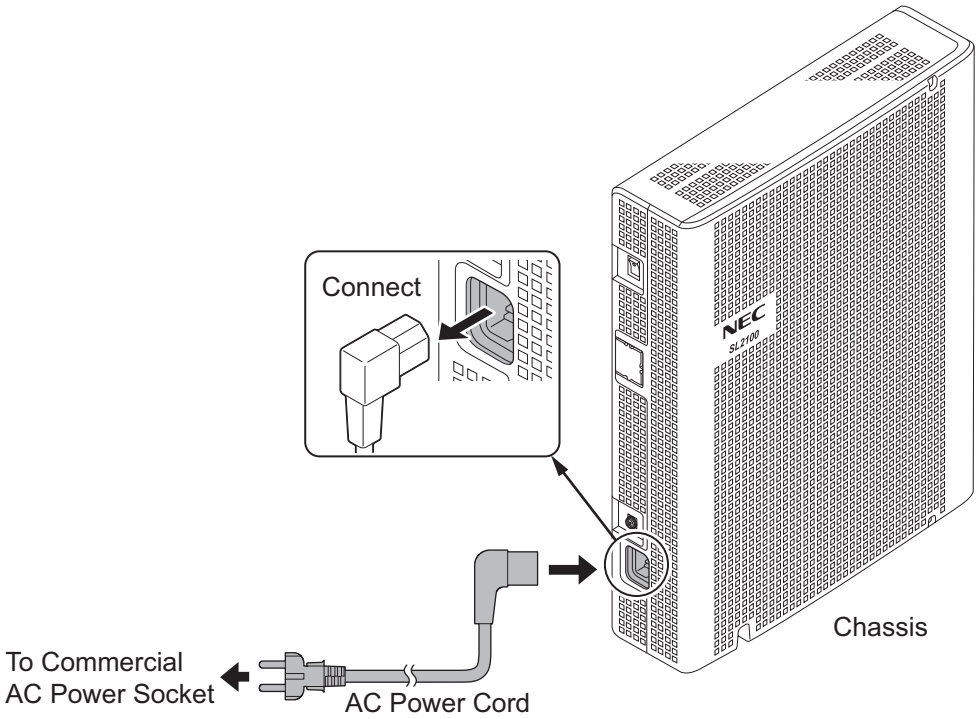

Figure 2-25 AC Power Cord

- ***Each Chassis must have its own commercial AC power socket.***
- ***<u>DO NOT POWER ON</u> until all Chassis installation has been completed.***

SECTION 2 INSTALLING THE EXTERNAL BACKUP BATTERY

2.1 General

The external backup battery box (IP4WW-Battery Box) with batteries provides power to the system when AC power fails. It is connected to the power supply of each Chassis.

- *An optional (locally procured), external battery source can be used to provide power during a power failure.*
- *Each Chassis must have own IP4WW-Battery Box.*

To avoid damage to equipment, do not install the Topaz Battery Box (DX2E-32i/NX7E Battery Box) to the SL2100 system.

2.2 Unpacking

Unpack the IP4WW-Battery Box and check it against the following list. Inspect for physical damage.

Table 2-10 IP4WW-Battery Box Packing List

Items	List of Contents	QTY
IP4WW-Battery Box	Battery Box	1
	Battery Connection Cable (Black & Red)	1
	Battery Connection Cable (Blue)	1
	Screws: M4 x 8 M3 x 6 with Washer Screws: M4.1 x 16	10 1 6
	Battery Box FM/WM Base-F Battery Box FM/WM Base-R	1 1
	Battery Box WM Support Battery Box WM Hook	1 1

2.3 Battery Box Dimensions

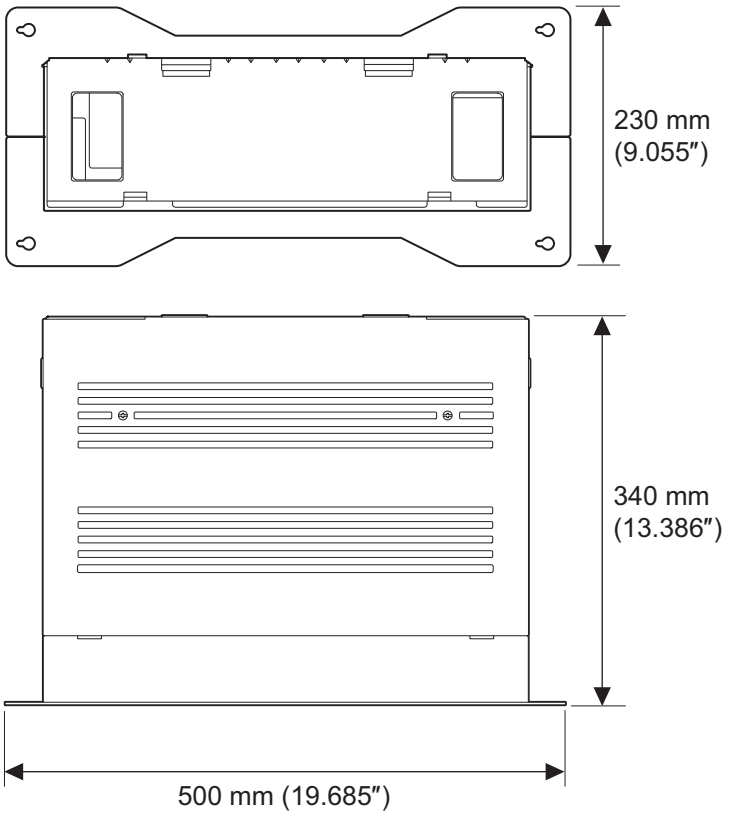

Figure 2-26 Dimension of the IP4WW-Battery Box

2.4 Battery Specifications

Table 2-11 Battery Specifications

Item	Data
Capacity	12 V, 7.0 Am/H or equivalent (Voltage must be 12 V)
Recommended Battery	GS Yuasa NP7-12 (151 x 65 x 97.5 mm / 2.7 kg) <GS Yuasa International LTD.> The Battery must be UL recognized product.
Number of Batteries (per Box)	2
Backup Duration (Estimated)	1 hour

2.5 Battery Installation

Before floor-mounting or wall-mounting the IP4WW-Battery Box, the batteries must be installed into the IP4WW-Battery Box.

1. Loosen two screws and remove the Front Cover.

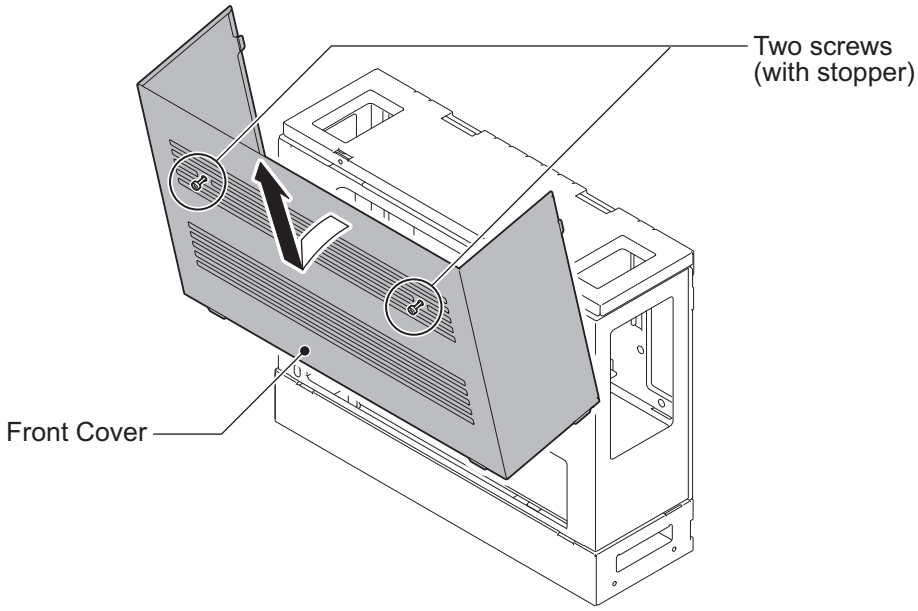

Figure 2-27 Removing the Front Cover

2. Disconnect the Battery Connection Cable from the Fuse Unit if the cable is plugged already.

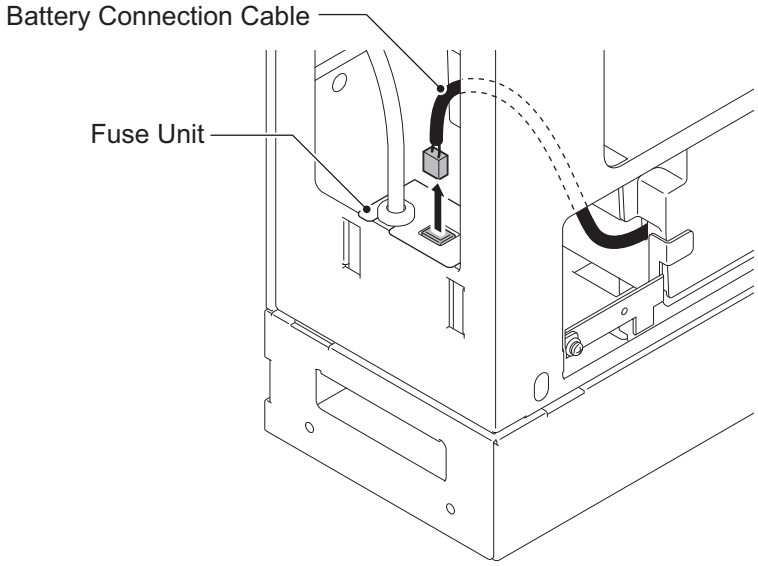

Figure 2-28 Disconnect Battery Connection Cable

3. Loosen the screw and lift the Batt Stopper.

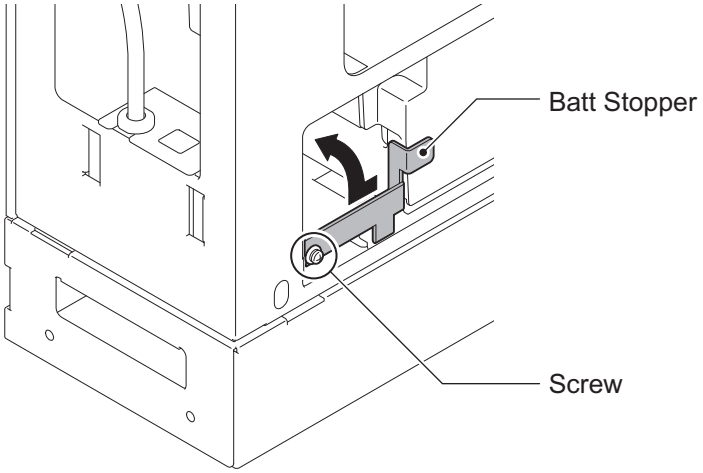

Figure 2-29 Batt Stopper

4. Pull out the Battery tray.

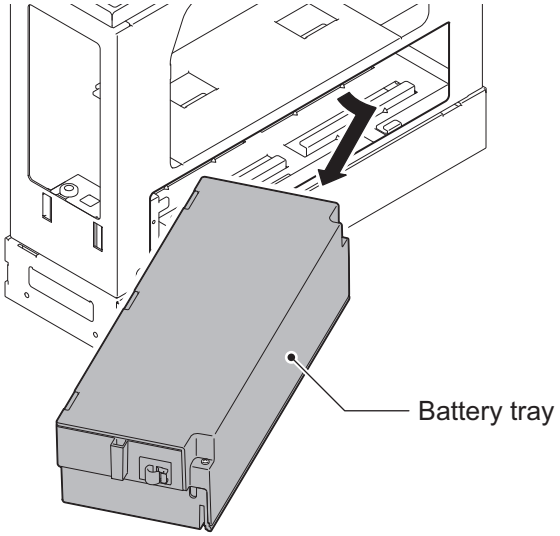

Figure 2-30 Pulling out the Battery Tray

5. Loosen two screws and remove the Battery tray cover.

6. Remove two screws and remove the Battery tray bracket.

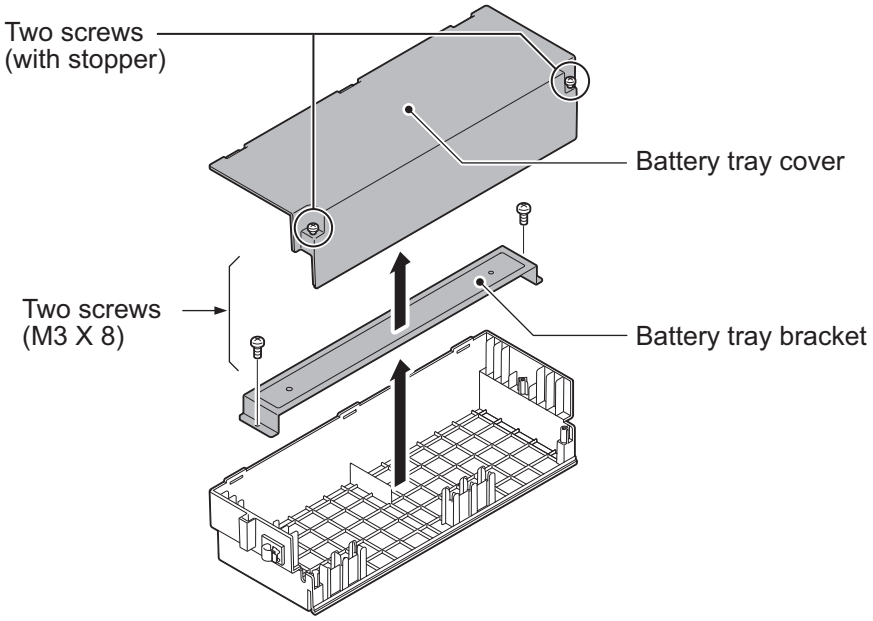

Figure 2-31 Remove the Battery Tray Bracket

7. Install two batteries into the Battery tray.

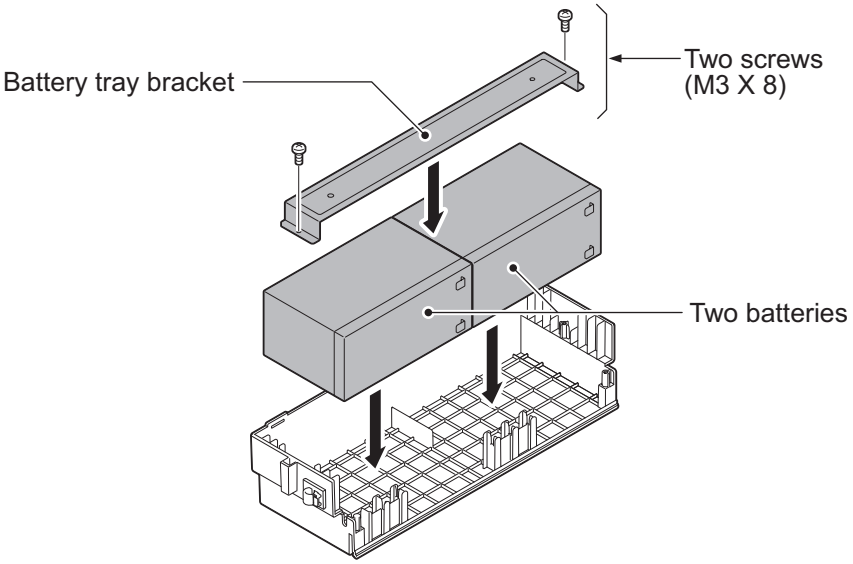

Figure 2-32 Battery Installation

8. Connect the battery cables.

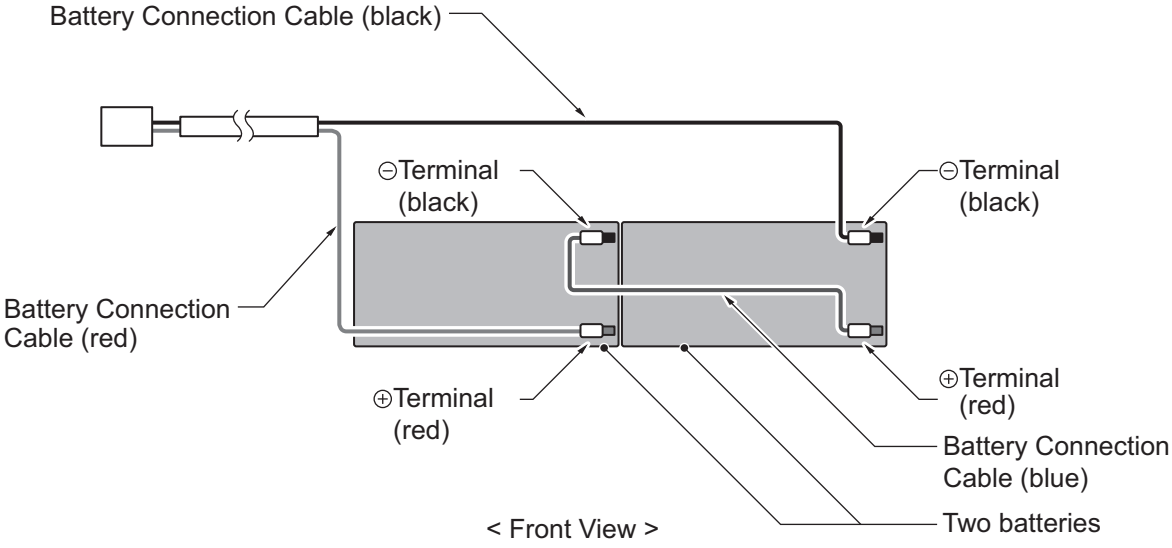

Figure 2-33 Connecting the Battery Cables

Incorrect installation of batteries may damage the Fuse Unit or cause possible fire.

9. Insert Battery Connection Cable into the Cable guides as shown in the next diagram.
10. Install the Battery tray cover aligning the three tabs and tightening the two screws.

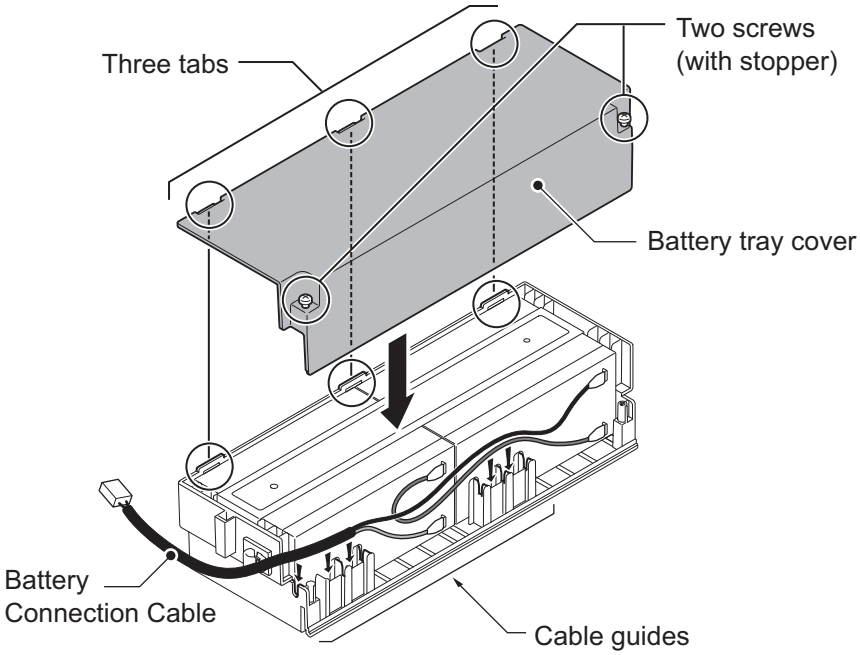

Figure 2-34 Installation of Battery Tray Cover

- ***Do not pull the Battery connection cable strongly.***
- ***Be careful not to catch the Battery Connection Cable when installing the Battery tray cover.***

Write down the year and month of the next battery replacement in the label on Front cover.

11. Insert the Battery tray into the Battery Box.

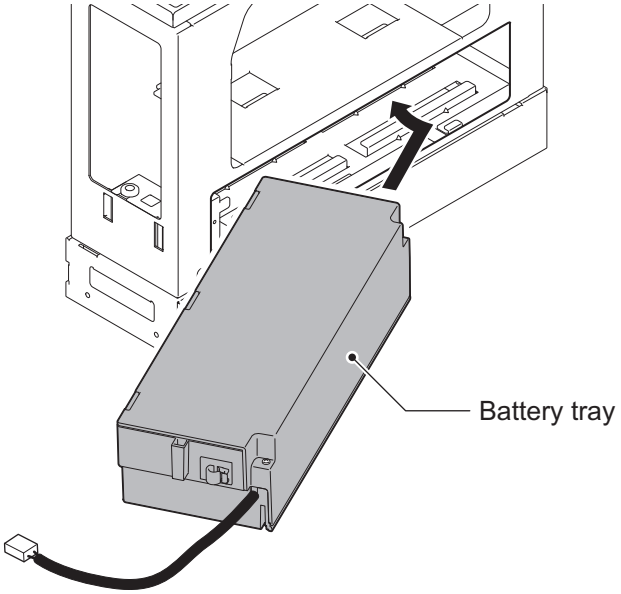

Figure 2-35 Inserting the Battery Tray

12. Set the Batt Stopper bracket in place and secure with screw.

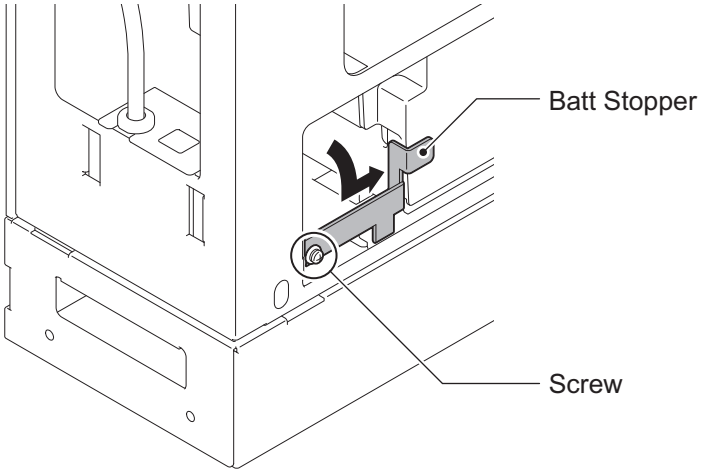

Figure 2-36 Secure Batt Stopper Bracket

13. Plug the Battery Connection Cable into the Fuse unit.

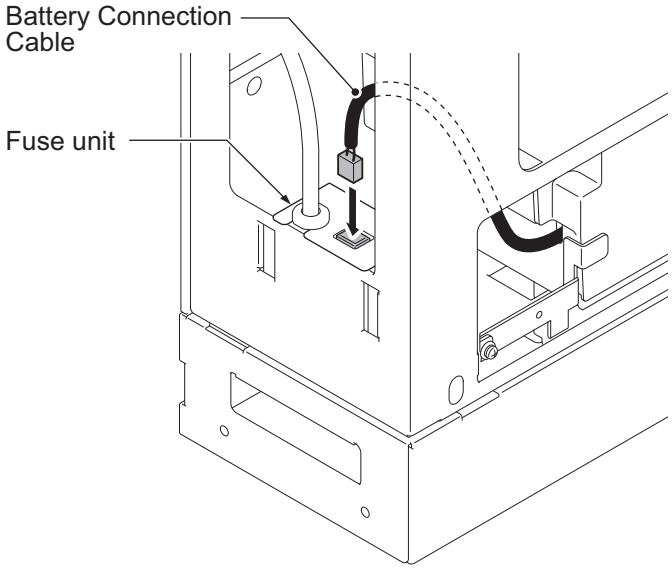

Figure 2-37 Connecting the Battery Connection Cable

14. Align tabs a to f to holes A to F on Battery Box. Slide the Front cover and tighten the two screws.

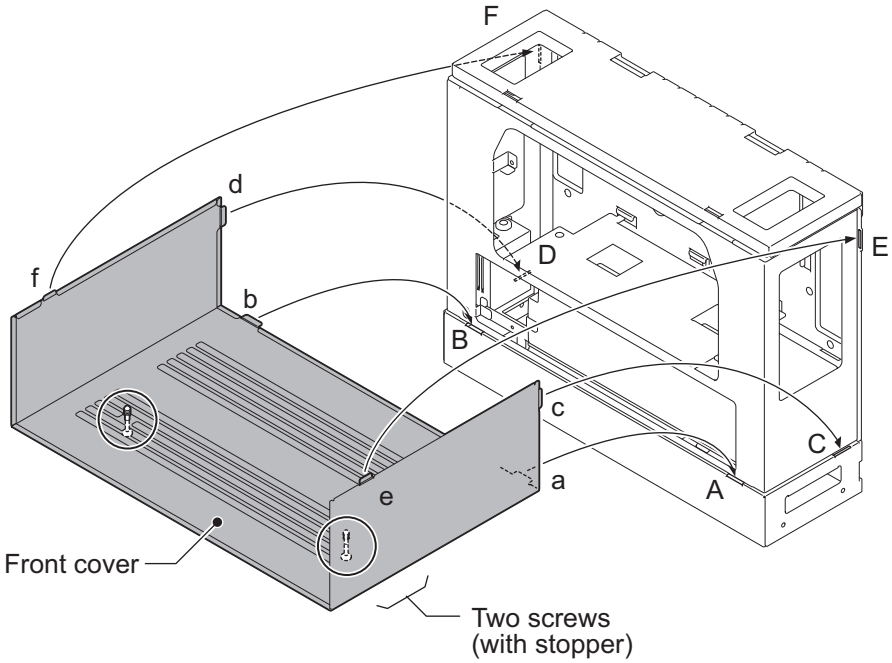

Figure 2-38 Installation of Front Cover

2.6 Mounting the IP4WW-Battery Box

The IP4WW-Battery Box can be installed on either the floor or wall. One Chassis can be mounted on an IP4WW-Battery Box.

2.6.1 Floor-Mounting the IP4WW-Battery Box

Battery box can be mounted on the floor using the FM/WM Base-F, FM/WM Base-R and WM Support. (Note: FM = Floor-Mount and WM = Wall-Mount)

1. Assemble the FM/WM Base-F, Base-R and WM Support.

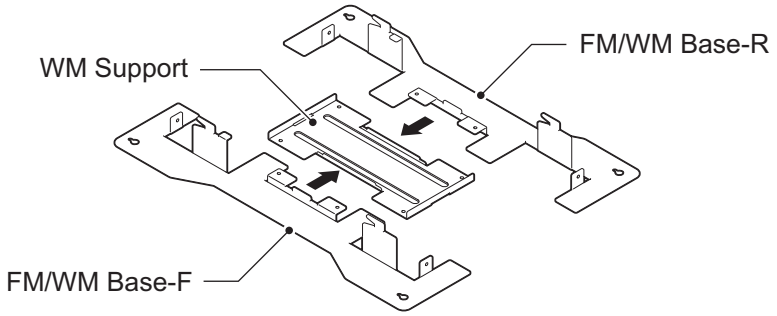

Figure 2-39 Bases and Support of the Battery Box

2. Refer to Figure 2-40 Floor-Mount Spacing Guide on page 2-30 for required spacing before drilling holes for 10 mm (0.394″) anchor bolts (locally procured).
   Mark and drill the four holes required to install the FM/WM Base.
3. Using anchor bolts, secure the FM/WM Base to the floor.

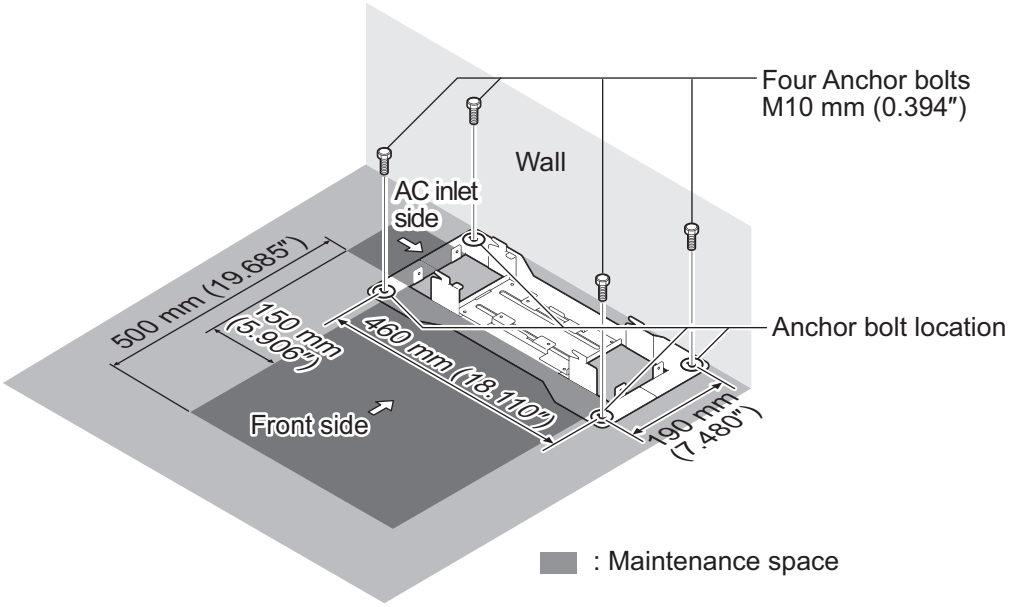

Figure 2-40 Floor-Mount Spacing Guide

4. Using the four hooks on the FM/WM Base mount the IP4WW-Battery Box on the Base.

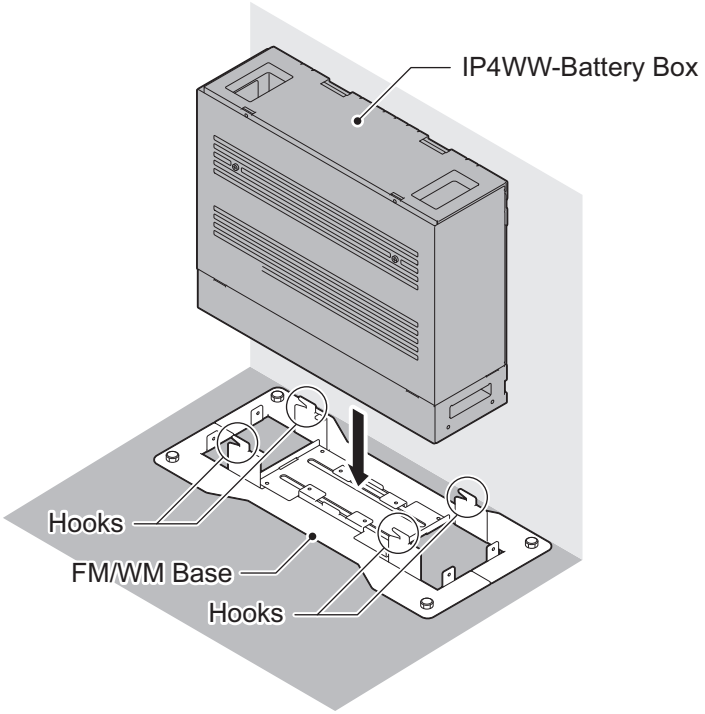

Figure 2-41 Mounting the Battery Box

5. Using four supplied screws, secure the IP4WW-Battery Box to the FM/WM Base.

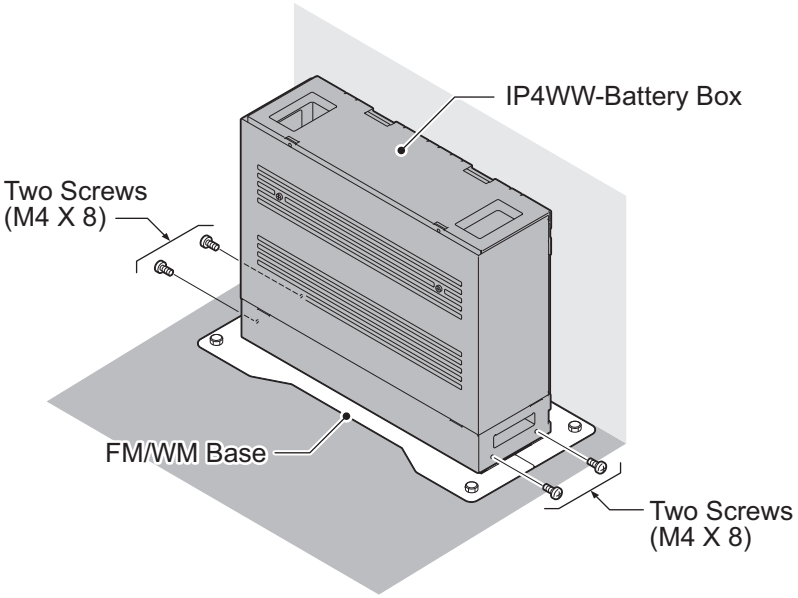

Figure 2-42 Securing the Battery Box

2.6.2 Wall-Mounting the IP4WW-Battery Box

When wall-mounting the IP4WW-Battery Box, ensure the wall can support the weight of the Battery Box (Total weight=17.6 kg (620.75 oz) - Including 2-batteries, cord, Chassis, etc). The Battery Box is secured to the wall using the FM/WM BASE. Ensure that enough space is available to allow the installation of additional Chassis.

Plywood should first be installed on the wall where the Battery Box will be positioned. This allows secure anchoring of the screws which support the weight of the Battery Box.

1. Using four supplied screws, secure the WM Support to the FM/WM Base-F and Base-R.

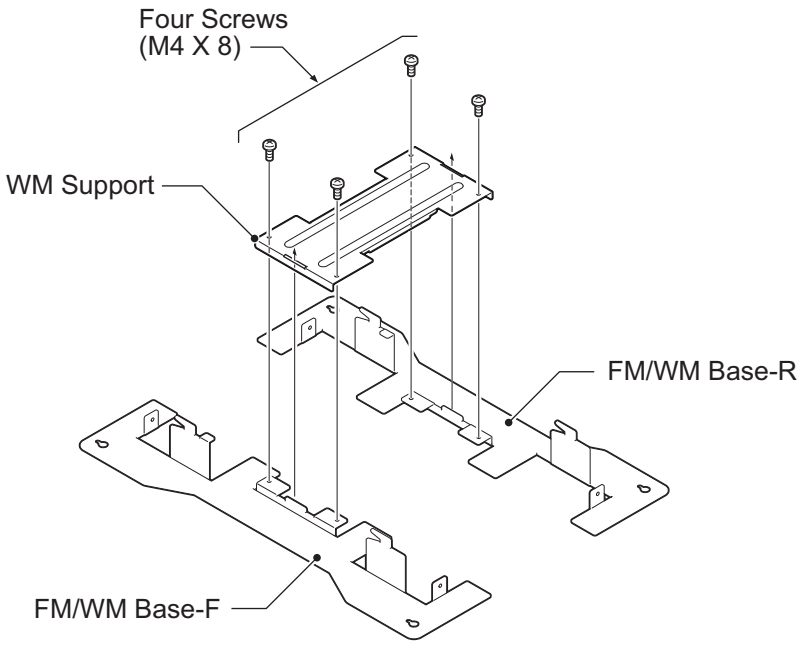

Figure 2-43 Assemble Battery Box Base

2. Refer to Figure 2-44 Wall-Mount Spacing Guide on page 2-33 for required spacing before drilling holes for 10 mm anchor bolts (locally procured).
   Mark and drill the four holes required to install the FM/WM Base.

3. Using anchor bolts, secure the FM/WM Base to the wall.

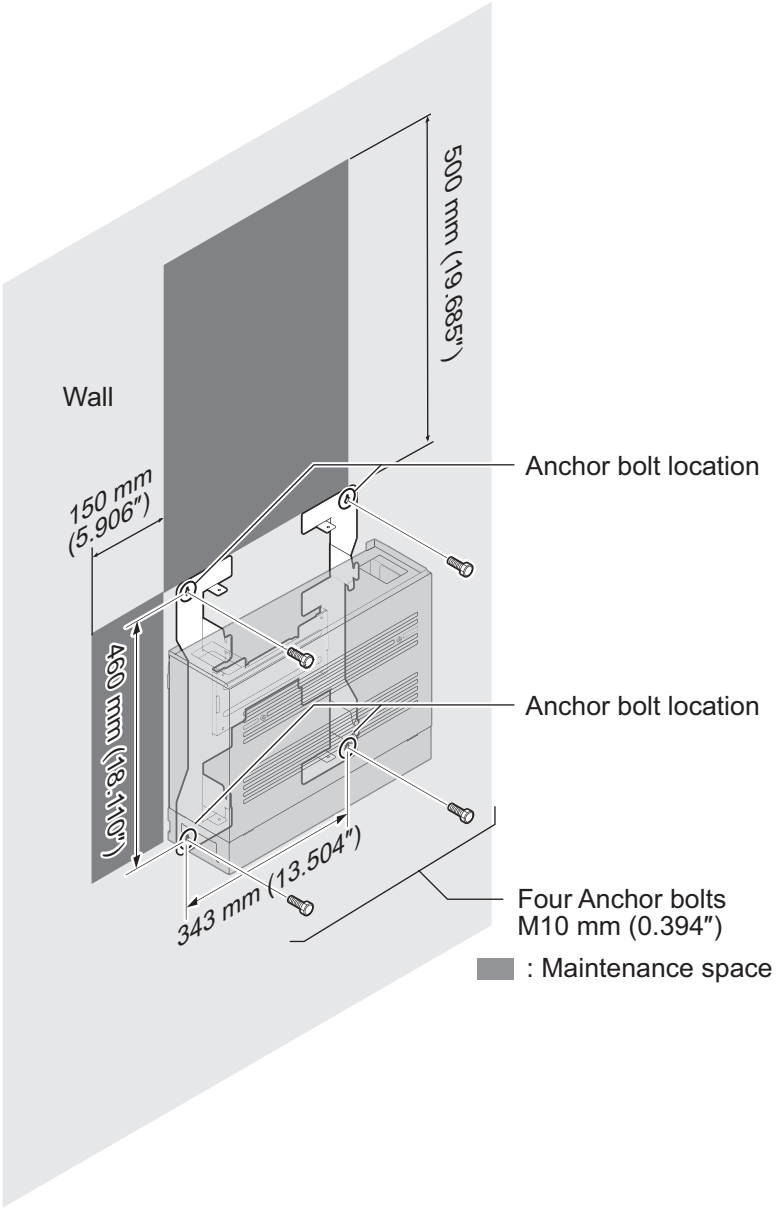

Figure 2-44 Wall-Mount Spacing Guide

4. Loosen two screws and remove the Front Cover.

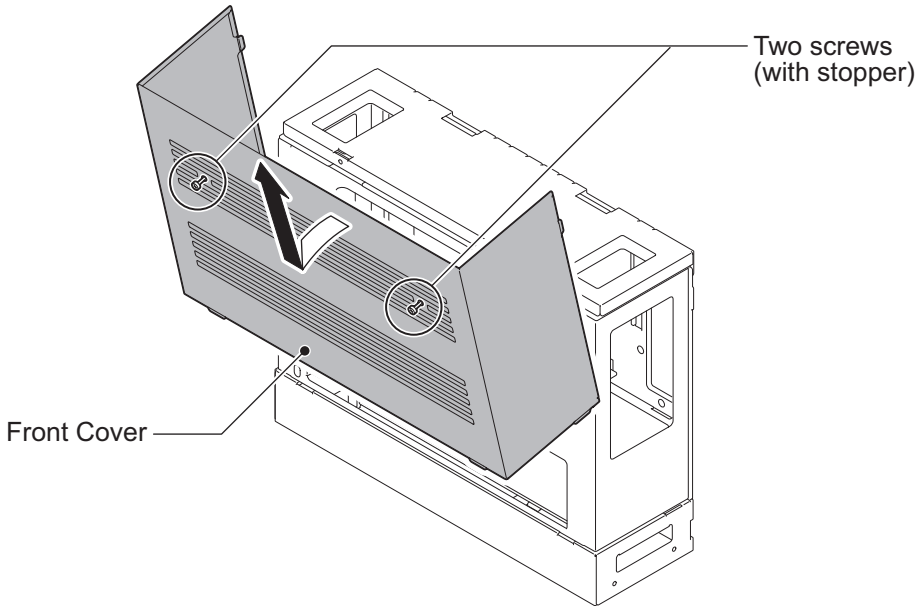

Figure 2-45 Removing the Front Cover

5. Using the four hooks on the FM/WM Base mount the IP4WW-Battery Box to the Base.

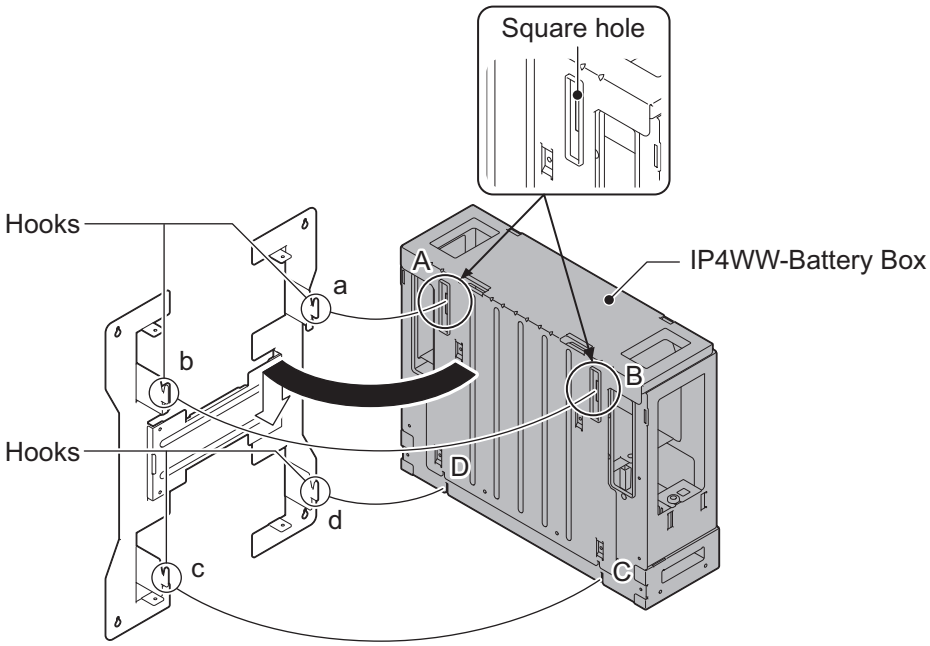

Figure 2-46 Mounting the Battery Box

6. Using one supplied screw (M3x6 with washer), secure the back plane of the Battery Box to the FM/WM Base.

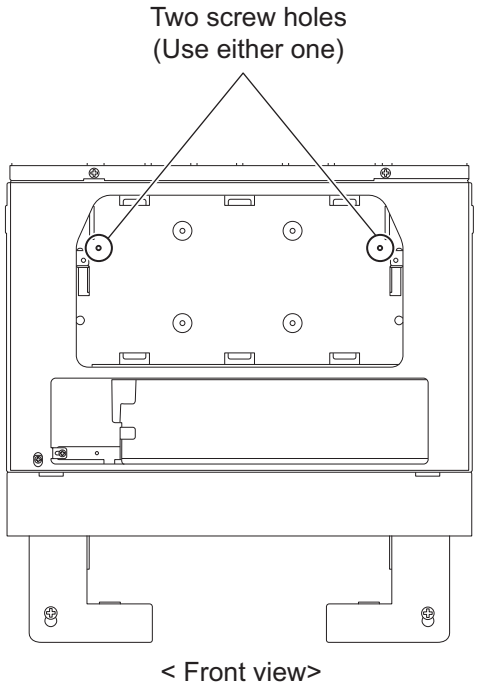

Figure 2-47 Securing the Battery Box

2.7 IP4WW-Battery Box to Chassis Connection

To avoid damage to equipment, do not install the Topaz Battery Box (DX2E-32i/NX7E Battery Box) to the SL2100 system.

- ***Make sure the system power is off.***
- ***If Expansion Chassis are installed, turn the power on/off in the order of Expansion 2 Chassis, Expansion 1 Chassis and then Main Chassis.***

1. Power off the Chassis and disconnect AC cord.

2. Cut and remove Plastic Knockout from the Sub-Cover to connect Battery cable.

For your safety, smooth the cut edges after removing the plastic knockout.

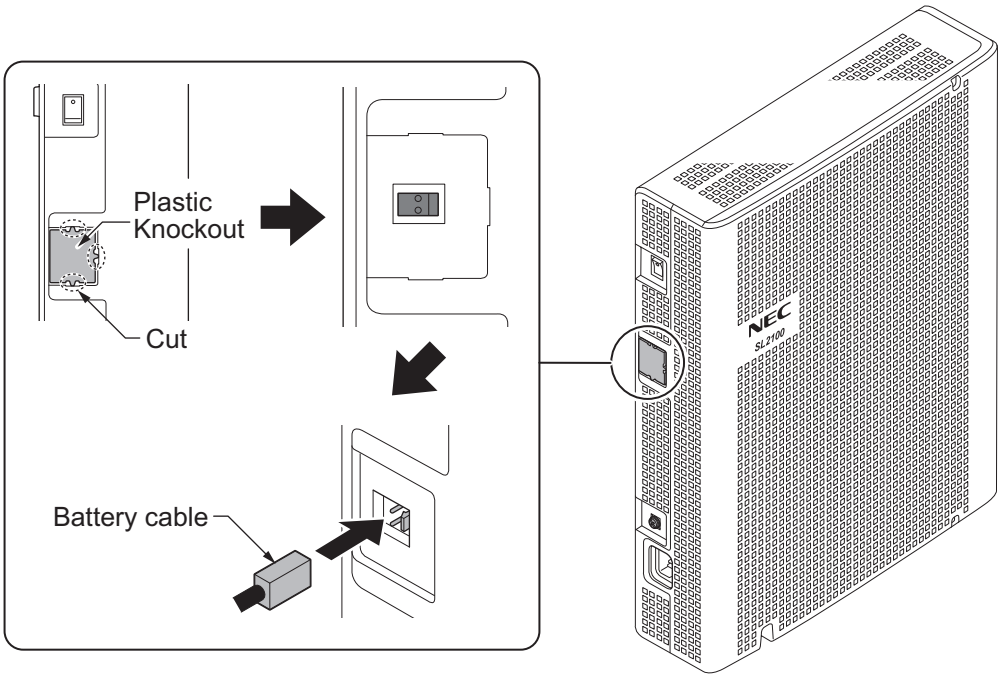

Figure 2-48 Connecting Battery Cable

3. Connect Battery cable from the Battery box to Battery connector on the Chassis.

2.8 IP4WW-Battery Box Fuse Replacement

- ***In the event of a blown fuse correct the fault causing the fuse to blow before replacing the fuse; otherwise you may cause fire or electrical hazards.***
- ***Be sure to use only the specified fuse (250V T8AL).***
- ***Be sure to install the fuse into the correct location.***
- ***Be careful not to burn yourself on the heated fuse. The blown fuse may be heated soon after blowing.***
- ***If Expansion Chassis are installed, turn the power on/off in the order of Expansion 2 Chassis, Expansion 1 Chassis and then Main Chassis.***

1. Power off the Chassis and disconnect AC cord.

2. Loosen two screws and remove the Front Cover.

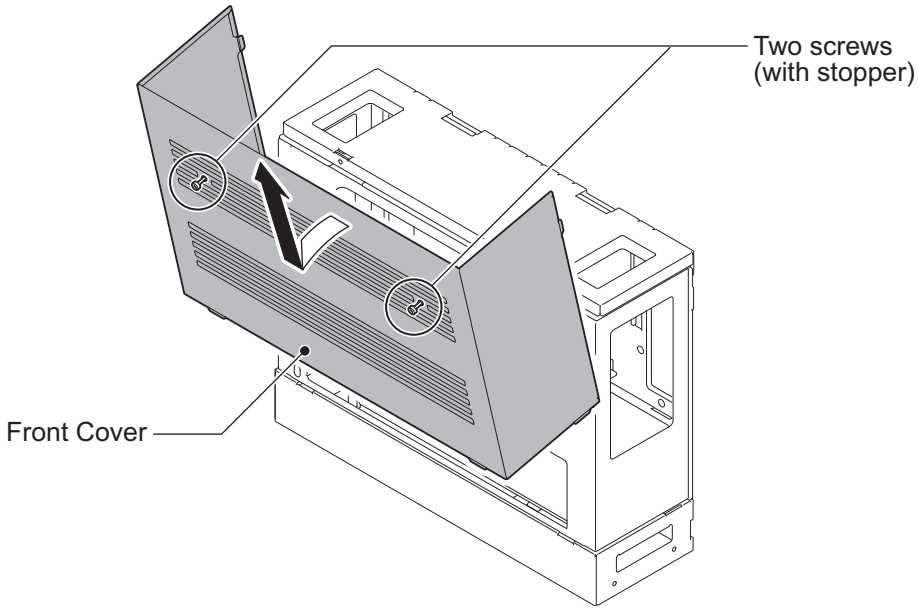

Figure 2-49 Removing the Front Cover

3. Disconnect the Battery connection cable from the Fuse Unit.

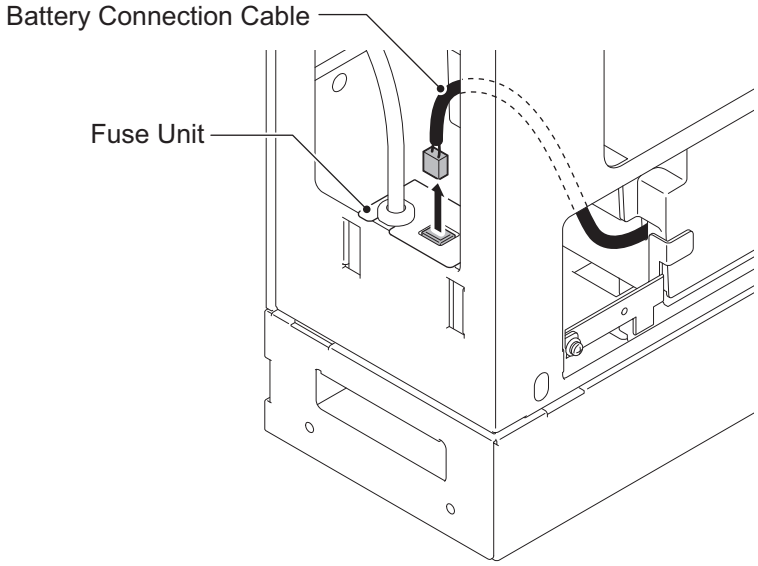

Figure 2-50 Disconnecting the Battery Connection Cable

4. Loosen the screw from the Fuse Unit.

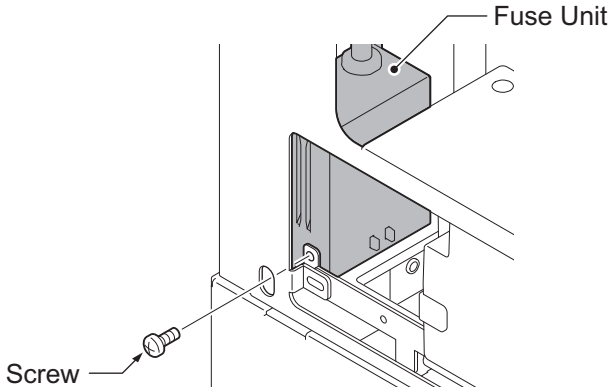

Figure 2-51 Loosen the Fuse Unit Screw

5. Slide Fuse Unit out of the Battery box.
6. Replace the fuse (250VT8AL).

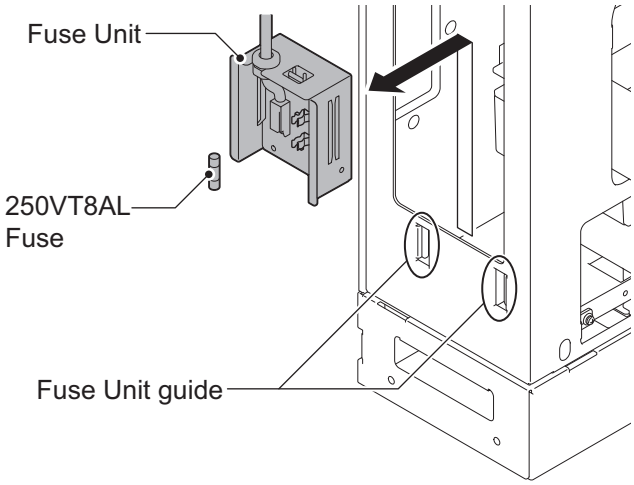

Figure 2-52 Replacing the Fuse

7. Using the Fuse Unit guides, slide the Fuse Unit into the Battery Box.

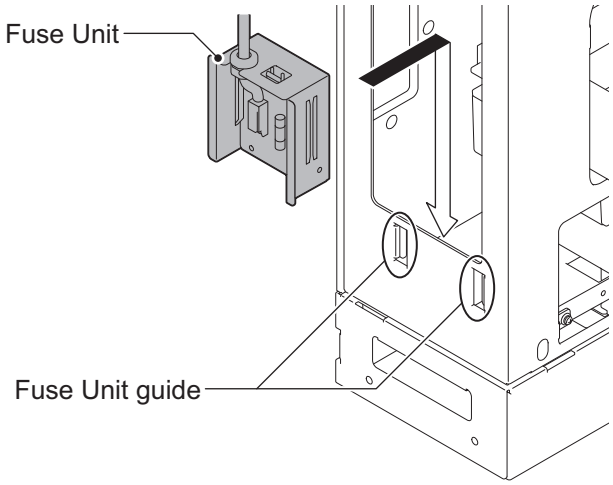

Figure 2-53 Install the Fuse Unit

8. Secure the Fuse Unit by tightening the screw.

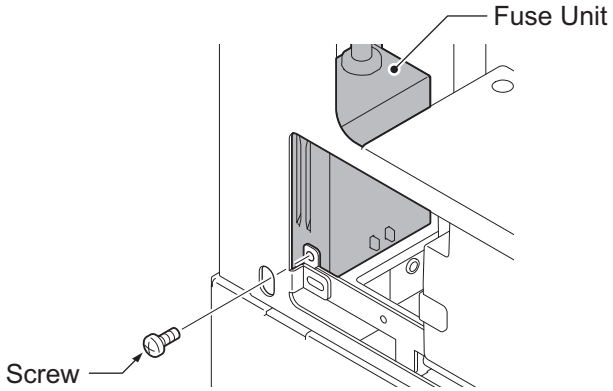

Figure 2-54 Securing the Fuse Unit

9. Reconnect the Battery Connection Cable to the Fuse Unit.

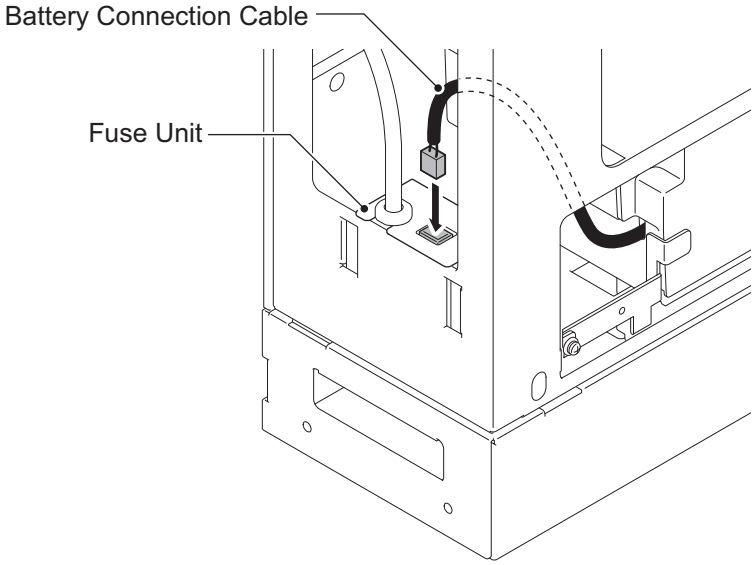

Figure 2-55 Connect Battery Connection Cable

10. Align tabs a to f to holes A to F on Battery Box. Slide the Front Cover into position and tighten the two screws.

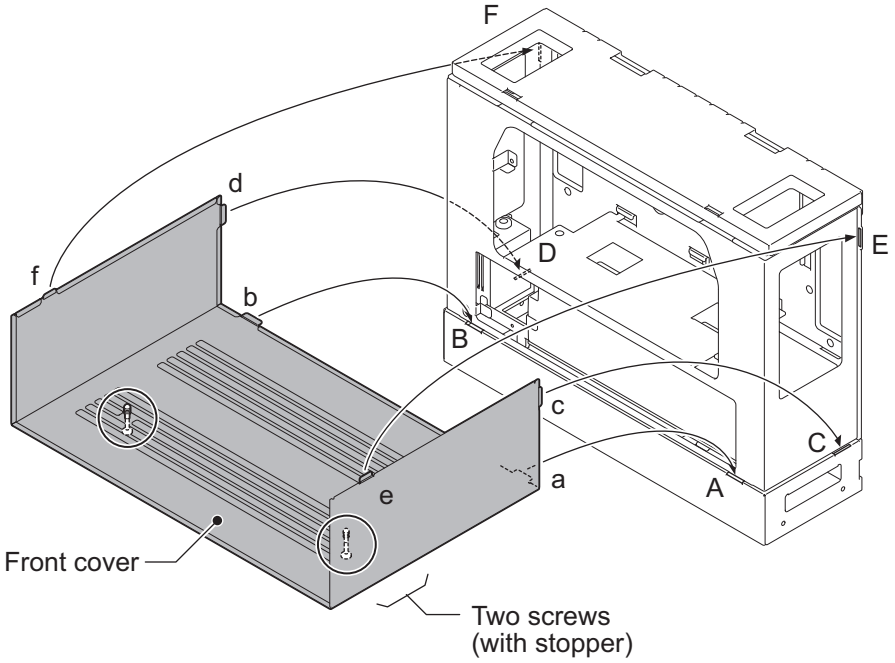

Figure 2-56 Installation of the Front Cover

SECTION 3 INSTALLING THE EXPANSION INTERFACE BOARDS

3.1 General

Not all boards are hot swappable. Do not remove or install from the chassis when powering up.

The system does NOT ALLOW to accommodate both Digital (2W) and Hybrid (4W) Multiline Terminal at the same time on a system. Type of available Multiline Terminals shall be defined whether 082U board can be detected at Main Chassis or not during the system start-up in progress by COLD start.

Except 1PRIDB daughter board, up to four expansion interface boards can be installed per Chassis.

Equipment Name	Equipment Description	Note
IP7WW-308U-A1	3 Analog Trunks + 8 Hybrid (4W) Extensions Board	
IP7WW-082U-B1	8 Digital Extensions + 2 Analog Extensions Board	
IP7WW-008U-C1	8 Hybrid (4W)/Analog Extensions Board	
IP7WW-000U-C1	0 Extensions Board (for Trunk DB)	
IP7WW-3COIDB-C1	3 Analog Trunks Daughter Board (mount to 082U/008U/000U)	
IP7WW-2BRIDB-C1	2 ISDN BRI Daughter Board (mount to 082U/008U/000U)	
IP7WW-1PRIDB-C1	1 ISDN PRI/T1/E1(for Latin America) Daughter Board (mount to 082U/008U/000U)	

- *The function of IP7WW-000U-C1 board is just a mounting board for the 3COIDB, 2BRIDB or 1PRIDB.*
- *One 1PRIDB can be installed per one chassis.*
- *The 3COIDB-B1, 2BRIDB-C1 and 1PRIDB-C1 can be installed in following combinations;*

Daughter Board	Option Board			
	308U-A1	082U-B1	008U-C1	000U-C1
3COIDB-C1	No	Yes	Yes	Yes
2BRIDB-C1	No	Yes	Yes	Yes
1PRIDB-C1	No	Yes	Yes	Yes

3.2 Unpacking

Unpack the 308U-A1/082U-B1/008U-C1/000U-C1/3COIDB-C1/2BRIDB-C1/1PRIDB-C1 and check it against the following list. Inspect for physical damage.

Table 2-12 Expansion Board Packing List

Items	List of Contents	QTY	Note
IP7WW-308U-A1	308U-A1 Board	1	
IP7WW-082U-B1	082U-B1 Board	1	
IP7WW-008U-C1	008U-C1 Board	1	
IP7WW-000U-C1	000U-C1 Board	1	
IP7WW-3COIDB-C1	3COIDB-C1 Board	1	
	Screw (with Washer and Spring Washer)	1	

Items	List of Contents	QTY	Note
IP7WW-2BRIDB-C1	2BRIDB-C1 Board	1	
	Screw (with Washer and Spring Washer)	1	
IP7WW-1PRIDB-C1	1PRIDB-C1 Board	1	
	Screw (with Washer and Spring Washer)	1	

3.3 Mounting the Expansion Interface Board

DO NOT POWER ON until all installation has been completed.
Fit the optional 3COIDB-C1/2BRIDB-C1/1PRIDB-C1 daughter boards before installing the 082U-B1/008U-C1/000U-C1 boards.
Set the switches on the 2BRIDB-C1 board before mounting it onto the 082U-B1/008U-C1/000U-C1 board.

3.3.1 Slot Location

Each 4KSU-C1 has four universal slots for station, trunk and optional boards excluding CPU/EXIFE slot. However the Slot 4,8,12 does NOT Support any types of Multiline Terminals. Analog extensions (and any types of Trunks) shall work. The slot location in the 4KSU-C1, refer to Figure 2-57 Slot Numbers on page 2-42.

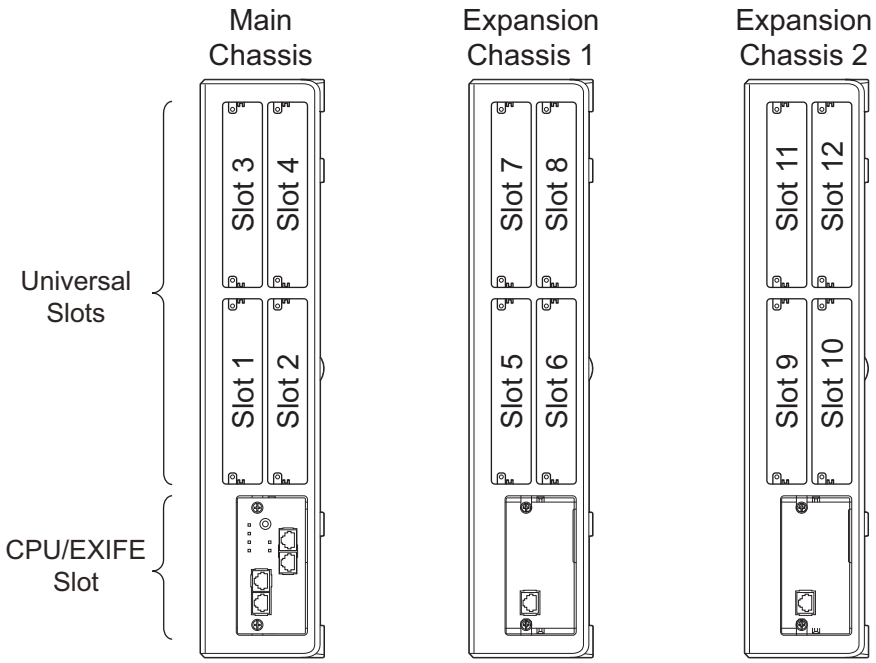

Figure 2-57 Slot Numbers

3.3.2 Mounting the 308U-A1/082U-B1/008U-C1/000U-C1 Boards

The procedure for mounting the expansion interface boards are as follows;

The following procedure is being explained only for slot No.1. However the other slots are also the same procedure as slot No.1.

Not all boards are hot swappable. Do not remove or install from the chassis when powering up.

- ***Do Not Power on until all installation have been completed.***
- ***If Expansion Chassis are installed, turn the power on/off in the order of Expansion 2 Chassis, Expansion 1 Chassis and then Main Chassis.***
- ***For your safety, smooth the cut edges after removing the plastic knockout.***

1. Turn off the system power.
2. Cut and remove the Plastic Knockouts as required for each Expansion interface board.

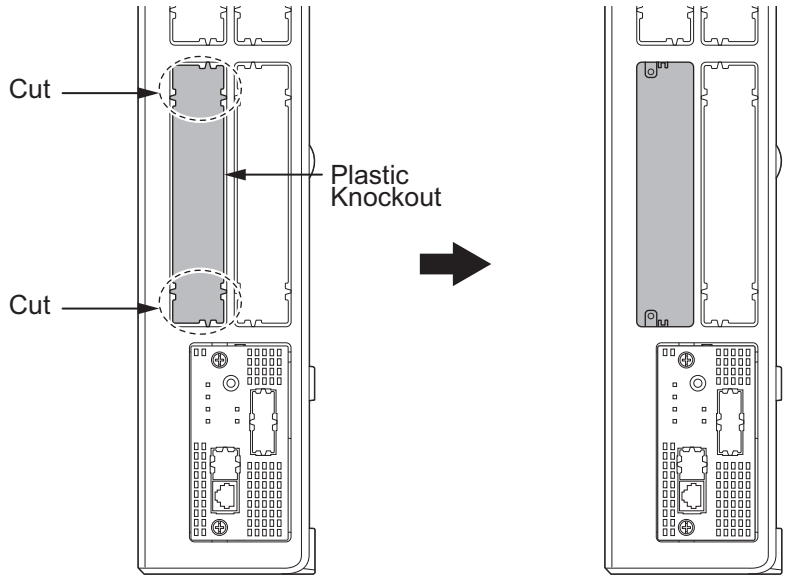

Figure 2-58 Plastic Knockouts

3. Insert a Expansion Interface Board in the guide rail of chassis and push it securely into position and tighten the two screws of the board.

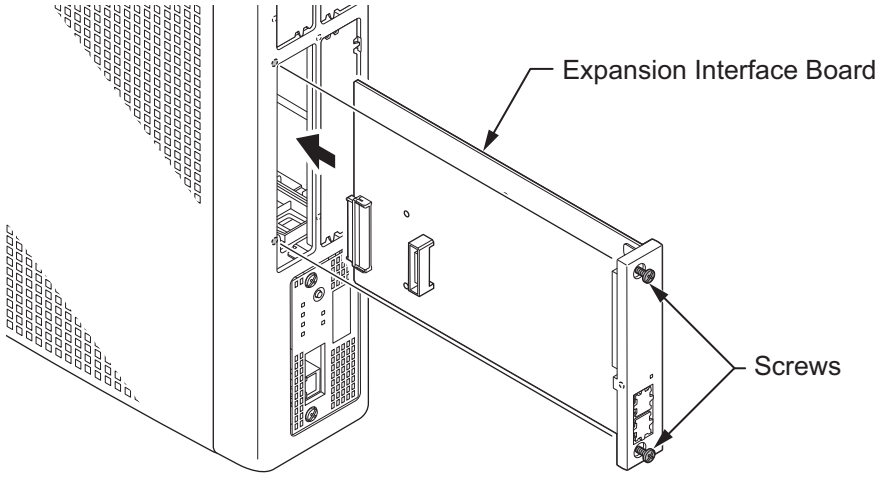

Figure 2-59 Mounting the Expansion Interface Board

3.3.3 Mounting the 3COIDB/2BRIDB/1PRIDB Board

For your safety, smooth the cut edges after removing the plastic knockout.

1. Turn off the system power.

2. Loosen two screws and pull out the 082U/008U/000U.

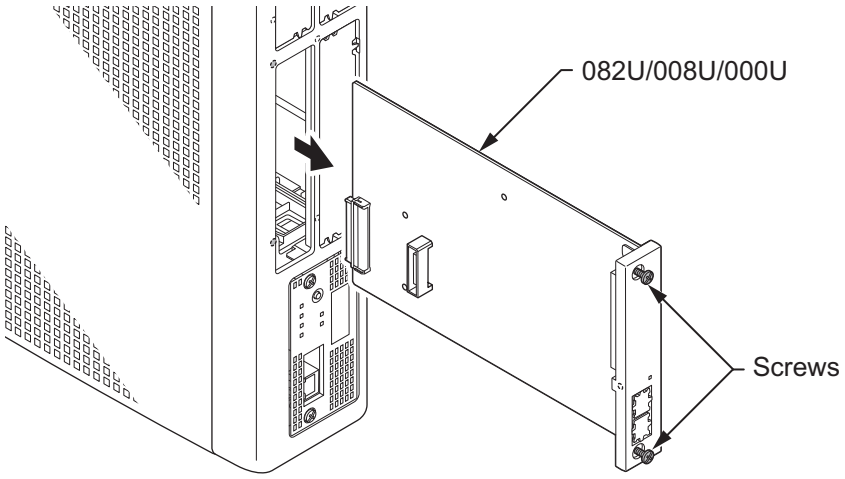

Figure 2-60 Remove 082U/008U/000U

3. Cut and remove specified Plastic Knockouts on the 082U/008U/000U board.

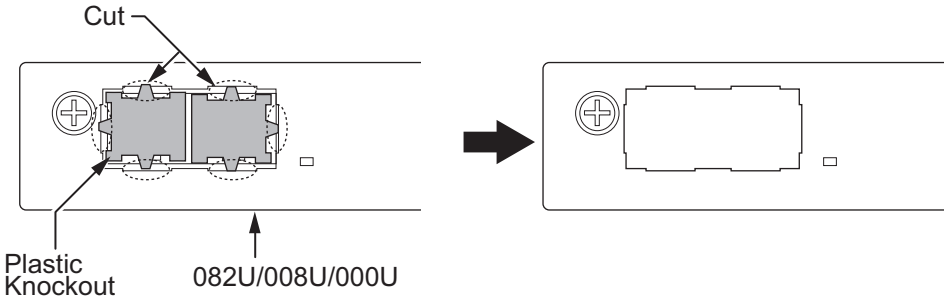

Figure 2-61 Plastic Knockouts on 082U/008U/000U

4. Mount the 3COIDB/2BRIDB/1PRIDB board onto the 082U/008U/000U board using one screw.

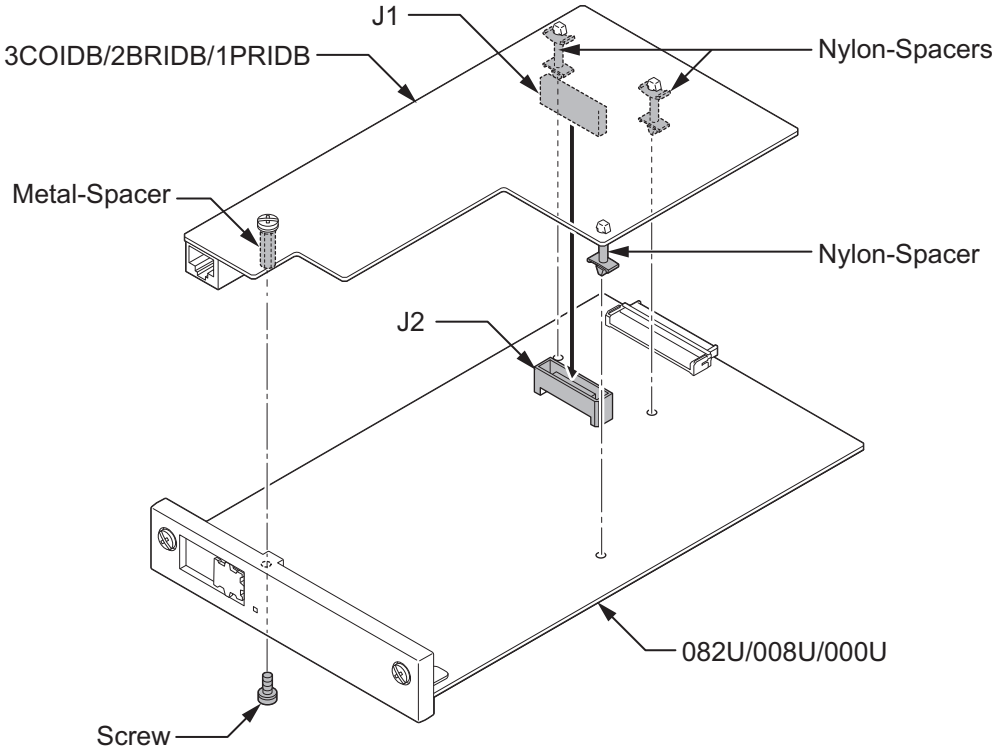

Figure 2-62 Mounting the 3COIDB/2BRIDB/1PRIDB

5. Insert the 082U/008U/000U board with 3COIDB/2BRIDB/1PRIDB board in the guide rail of chassis and push it securely into the Chassis.

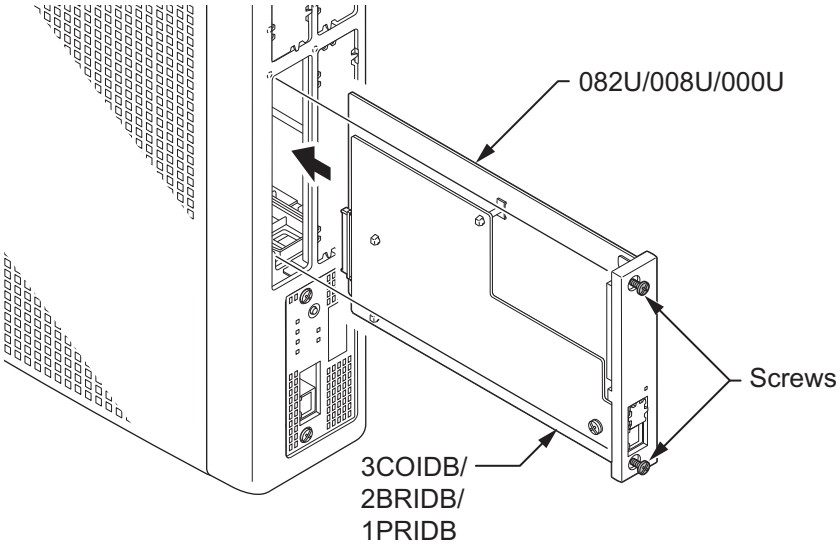

Figure 2-63 Installing the 3COIDB/2BRIDB/1PRIDB

3.3.4 How to recognize the type of Trunk Daughter Board

The type of installed Trunk Daughter Board can be easily recognized by checking the position of RJ61/RJ45 connectors at Front Panel, without removing the installed board from Chassis.

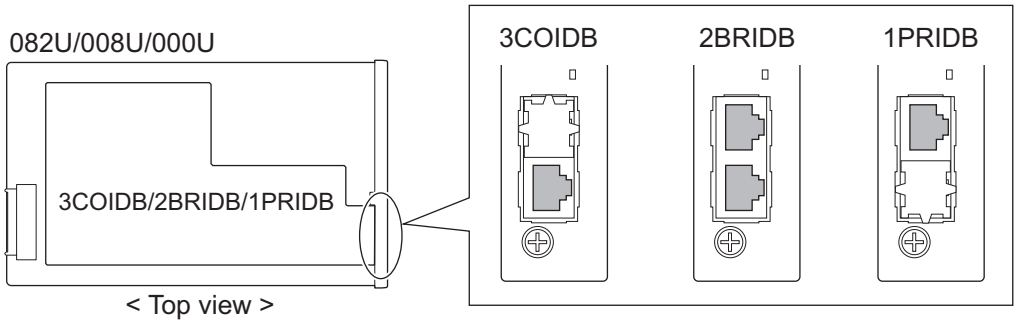

Figure 2-64 How to recognize the type of Trunk Daughter Board

3.4 Extension/Trunk Cabling

3.4.1 General

The system provides RJ61 modular jack for analog trunk and extension connections. BRI and PRI connections for RJ45 modular jack.

Precautions for Cabling

- Do not wire the cable with an AC cable, computer, etc.
- Do not run the cable near the high frequency generating device.
- Use cable protectors in case the cables run on the floor.
- Aerial distribution wiring is not allowed.
- Trunks must be installed with lightning protectors.
- Do not install the Topaz Terminal in the SL2100 system, it does not work properly.
- Do not connect the Ethernet (10Base-T/100Base-T( )/1000Base-T( )) port (RJ45) to a telephone line or any Telco line (for example; T-1 or RJ48 lines).

3.4.2 Cabling IP7WW-308U-A1

The 308U-A1 board within each Chassis provides four RJ61 modular jacks for hybrid extension (8 ports) and one for analog trunks (3 ports).

Before plugging in the Multiline Telephone, DSS Console, Single line Telephone or Doorphone, ensure all Main and Expansion Chassis are powered off.

Topaz Terminal does not work properly when it connected.

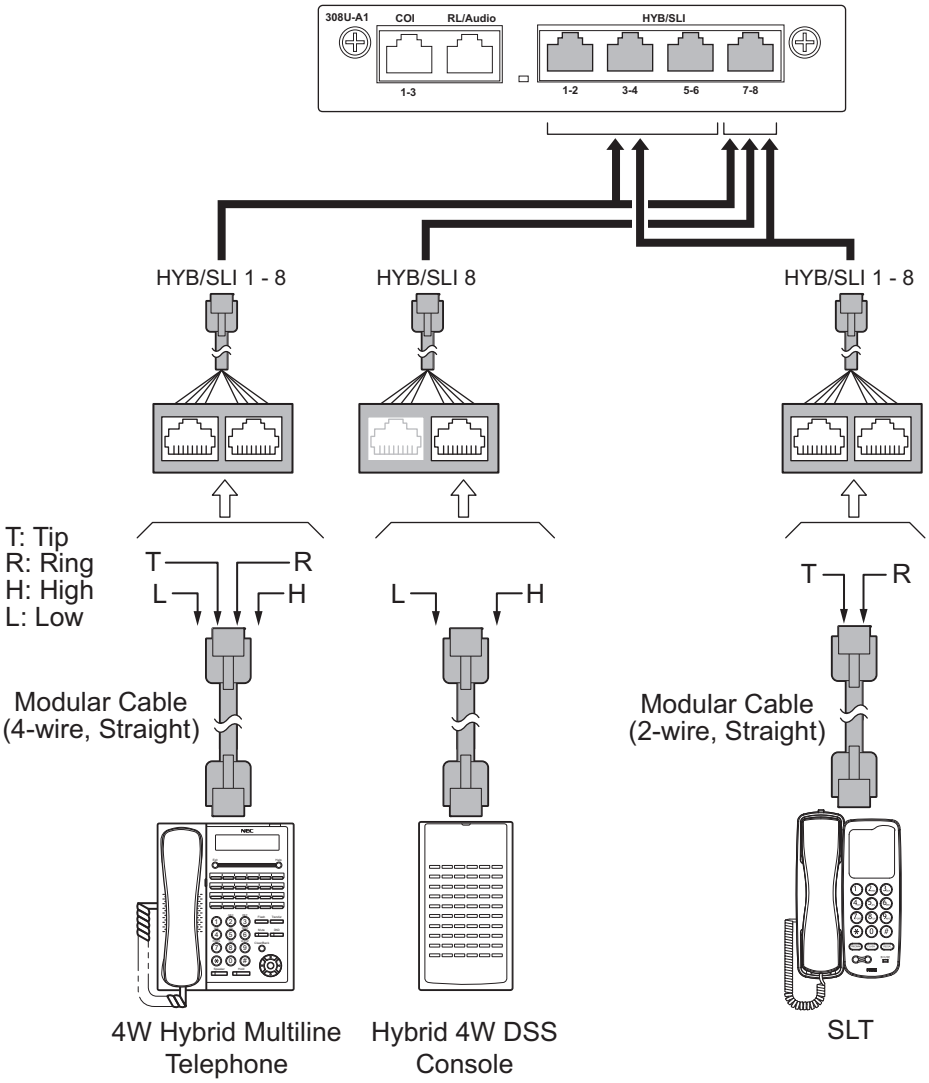

Figure 2-65 Hybrid/Analog Extension Cabling of 308U-A1

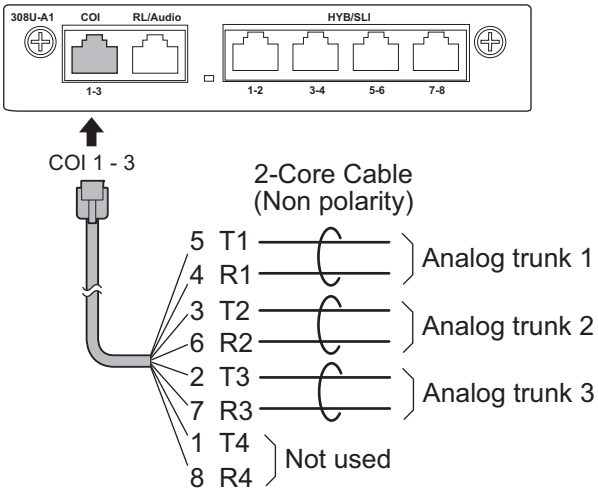

Figure 2-66 Analog Trunk Cabling of 308U-A1

For Installing the DoorBox refer to Installing the Doorphone Box, Security Sensor Device (locally procure) on page 2-80.

For Installing the Control Relay refer to Installing the Door Unlock Devices on page 2-86.

For Installing the External Paging Speaker/External MOH/BGM Sources refer to Installing the External Paging Speaker/External MOH/BGM Sources on page 2-87.

3.4.2.1 Connectors

The following table shows the pin-outs for the RJ-61 cable connector for Hybrid/Analog extension and trunk connections

Table 2-13 RJ-61 Hybrid/Analog Extension Connector Pin-Outs (J4)

	Pin No.	Pin Function (HYB/SLI: 1-2 / 3-4 / 5-6 / 7-8)
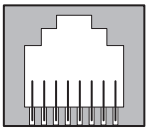	1	HYB Data 2/4/6/8 (H)
	2	HYB Data 1/3/5/7 (H)
	3	HYB/SLI 2/4/6/8 (Tip)
	4	HYB/SLI 1/3/5/7 (Ring)
	5	HYB/SLI 1/3/5/7 (Tip)
	6	HYB/SLI 2/4/6/8 (Ring)
	7	HYB Data 1/3/5/7 (L)
	8	HYB Data 2/4/6/8 (L)

Table 2-14 RJ-61 Analog Trunk Pin-Outs (J5 (COI))

	Pin No.	Pin Function (COI: 1-3)
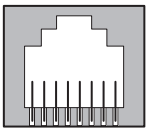	1	-
	2	CO 3 (Tip)
	3	CO 2 (Tip)
	4	CO 1 (Ring)
	5	CO 1 (Tip)
	6	CO 2 (Ring)
	7	CO 3 (Ring)
	8	-

3.4.3 Cabling IP7WW-082U-B1

The 082U-B1 board within each Chassis provides two RJ61 modular jacks for digital extension (8 ports) and one for Analog extensions (2 ports).

Before plugging in the Multiline Telephone, DSS Console, Single line Telephone or Doorphone, ensure all Main and Expansion Chassis are powered off.

Topaz Terminal does not work properly when it connected.

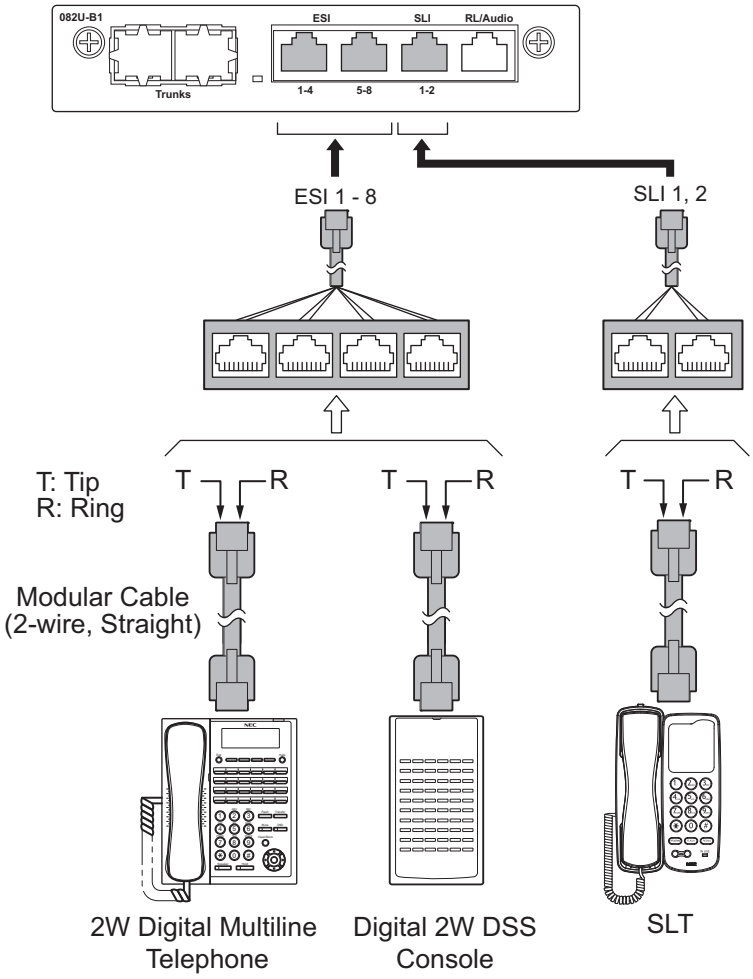

Figure 2-67 Connectors of 082-B1

While an Analog Telephone (port) is ringing or MW-lamp is flashing on an Analog Phone (port), do not disconnect the phone from the port and or connect another type of the terminal to this port.

3.4.3.1 Connectors

The following table shows the pin-outs for the RJ-61 cable connector for 2W Digital/Analog extension connections.

Table 2-15 RJ-61 Digital Connector Pin-Outs (J4 (ESI))

	Pin No.	Pin Function (ESI: 1-4 / 5-8)
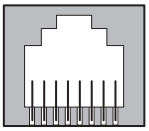 87654321	1	ESI 4/8 (Tip)
	2	ESI 3/7 (Tip)
	3	ESI 2/6 (Tip)
	4	ESI 1/5 (Ring)
	5	ESI 1/5 (Tip)
	6	ESI 2/6 (Ring)
	7	ESI 3/7 (Ring)
	8	ESI 4/8 (Ring)

Table 2-16 RJ-61 Analog Pin-Outs (J4 (SLI))

	Pin No.	Pin Function (SLI: 1-2)
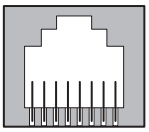 87654321	1	-
	2	-
	3	SLI 2 (Tip)
	4	SLI 1 (Ring)
	5	SLI 1 (Tip)
	6	SLI 2 (Ring)
	7	-
	8	-

3.4.4 Cabling IP7WW-008U-C1

The 008U-C1 board within each Chassis provides four RJ61 modular jacks for Hybrid/Analog extension (8 ports).

Before plugging in the Multiline Telephone, DSS Console, or Single Line Telephone, ensure all Main and Expansion Chassis are powered off.

Topaz Terminal does not work properly when it connected.

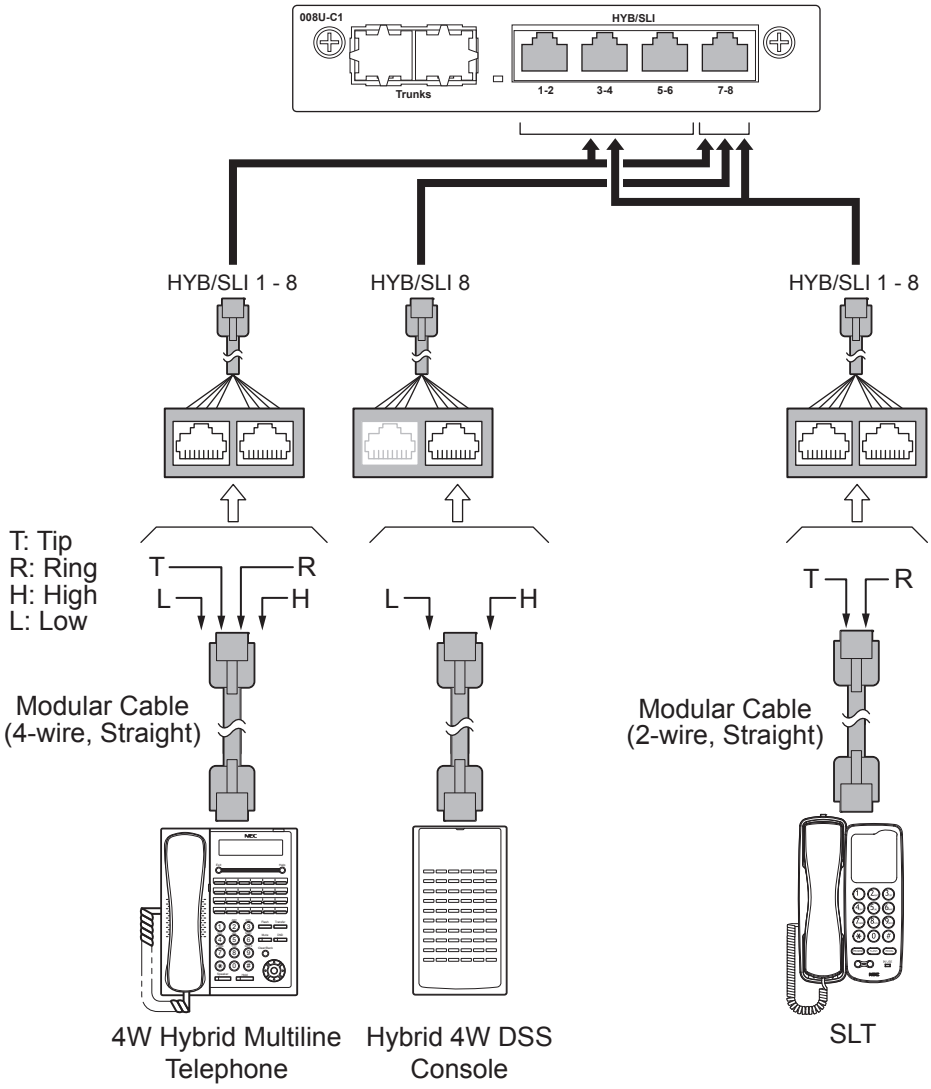

Figure 2-68 Hybrid/Analog Extension Cabling of 008U-C1

3.4.4.1 Connectors

The following table shows the pin-outs for the RJ-61 cable connector for Hybrid/Analog extension connections.

Table 2-17 RJ-61 Hybrid/Analog Pin-Outs (J4)

	Pin No.	Pin Function (HYB/SLI: 1-2 / 3-4 / 5-6 / 7-8)
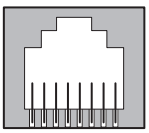 87654321	1	HYB Data 2/4/6/8 (H)
	2	HYB Data 1/3/5/7 (H)
	3	HYB/SLI 2/4/6/8 (Tip)
	4	HYB/SLI 1/3/5/7 (Ring)
	5	HYB/SLI 1/3/5/7 (Tip)
	6	HYB/SLI 2/4/6/8 (Ring)
	7	HYB Data 1/3/5/7 (L)
	8	HYB Data 2/4/6/8 (L)

3.4.5 Cabling IP7WW-000U-C1

This IP7WW-000U-C1 board does not have any connection for cabling.

3.4.6 Cabling and Setting IP7WW-3COIDB-C1

This IP7WW-3COIDB-C1 board provides one RJ-61 connection for CO lines.

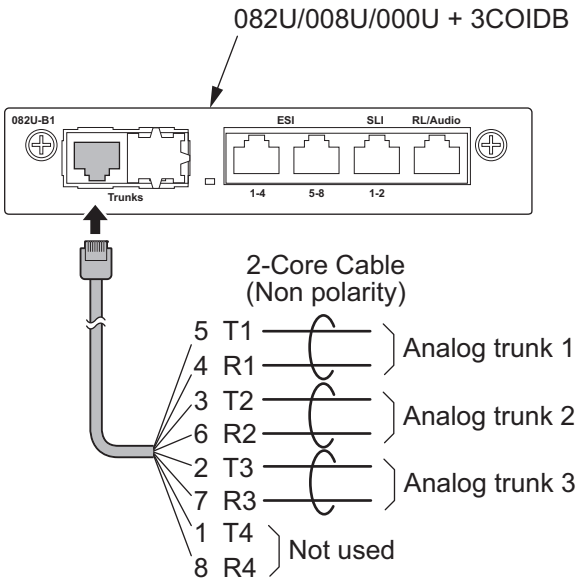

Figure 2-69 Connector of 3COIDB-C1

3.4.6.1 Connectors

The following table shows the pin-outs for the RJ-61 cable connector for CO connection.

Table 2-18 RJ-61 CO Pin-Outs (J2)

	Pin No.	Pin Function
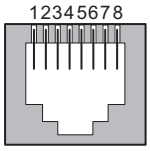	1	-
	2	CO 3 (Tip)
	3	CO 2 (Tip)
	4	CO 1 (Ring)
	5	CO 1 (Tip)
	6	CO 2 (Ring)
	7	CO 3 (Ring)
	8	-

3.4.7 Cabling and Setting IP7WW-2BRIDB-C1

This IP7WW-2BRIDB-C1 board provides two RJ-45 BRI connections.

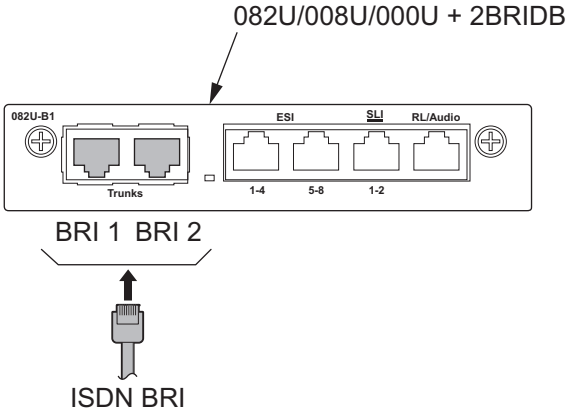

Figure 2-70 Connectors of 2BRIDB-C1

3.4.7.1 Connectors

The following table shows the pin-outs for the RJ-45 cable connector for BRI connections.

Table 2-19 RJ-45 BRI Pin-Outs (J2)

	Pin No	Pin Function (BRI 1 / BRI 2)
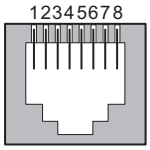	1	-
	2	-
	3	TA 1 / TA 2
	4	RA 1 / RA 2
	5	RB 1 / RB 2
	6	TB 1 / TB 2
	7	-
	8	-

3.4.7.2 Switch Setting

Figure 2-71 Switches Location of 2BRIDB-C1 on page 2-55 shows the location of the connectors and switches on the IP7WW-2BRIDB-C1.

1. Set the switches J12 to J17 according to the system, referring the Table 2-20 Switch Setting of 2BRIDB-C1 on page 2-54.

Table 2-20 Switch Setting of 2BRIDB-C1

Switch No.	Switch Position	Description
J12/J15	ON (default)	Termination register is ON. This SW should be ON in case: • T-Bus Point-to-Point connection is selected. • T-Bus Point-to-Multipoint is selected, and if the system is Terminal 8. (last device on the bus) • S-Bus.
	OFF	P-MP (Terminal 7)
J13, J14/J16, J17	T (default)	T-Bus connection
	S	S-Bus connection

J12 & J15 do not configure the connection type on the system, they only add/remove the termination of the circuit.
J13,J14 & J16, J17 do not configure the connection type on the system, they only select the polarity of the connector J2/J3.
The 2BRIDB-C1 circuits must also be setup within the system configuration.

2. Connect the cables from the NT1 Network Termination cable to the J2 or J3 connector on the 2BRIDB-C1 daughter board.
   Connector J2 - BRI1: Use switches J12, J13, J14
   Connector J3 - BRI2: Use switches J15, J16, J17

Ensure that you set all switches correctly for each BRI circuit.

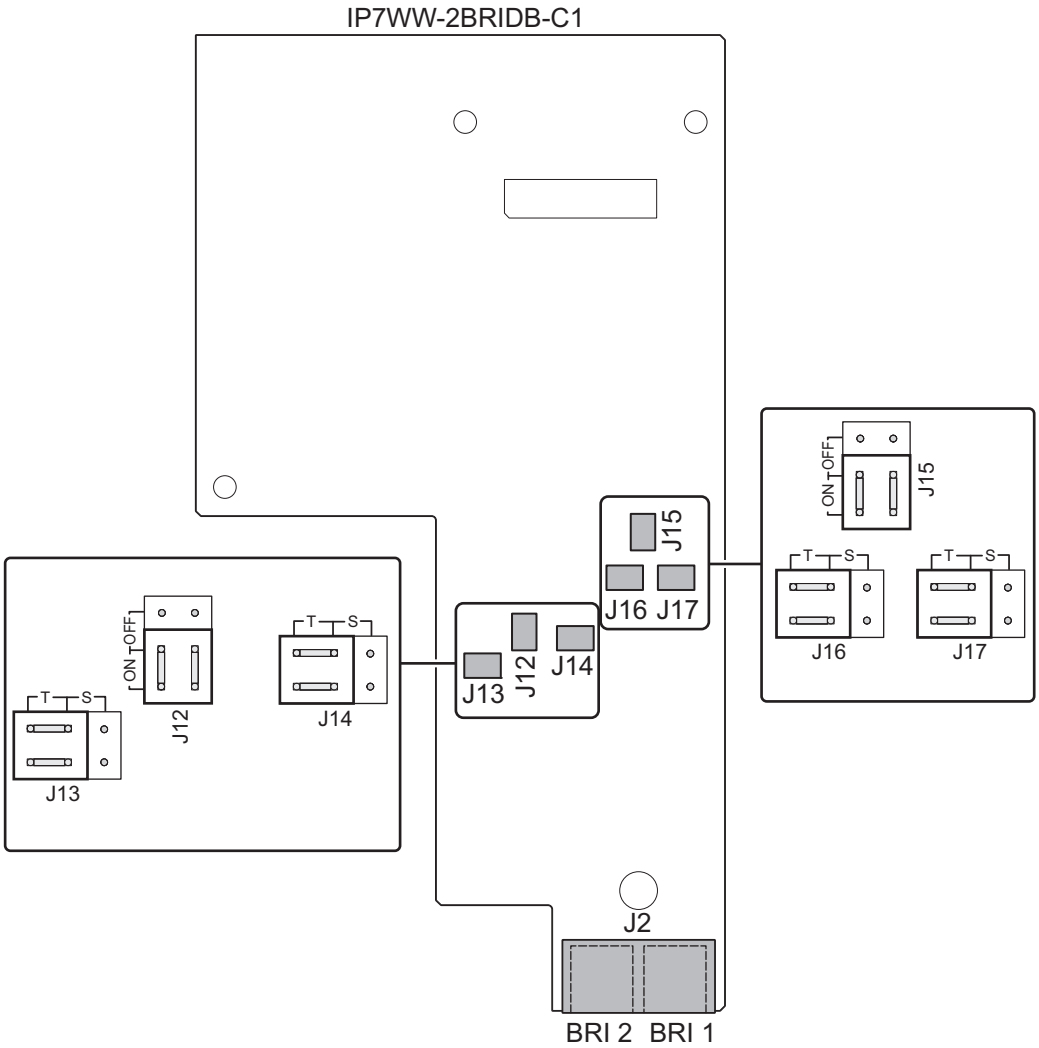

Figure 2-71 Switches Location of 2BRIDB-C1

3.4.8 Cabling and Setting IP7WW-1PRIDB-C1

The E1 standard may differ from country by country. The conformity test must be required before setting the E1 Trunk.

This IP7WW-1PRIDB-C1 board provides one RJ-45 PRI/T1/E1 connection.

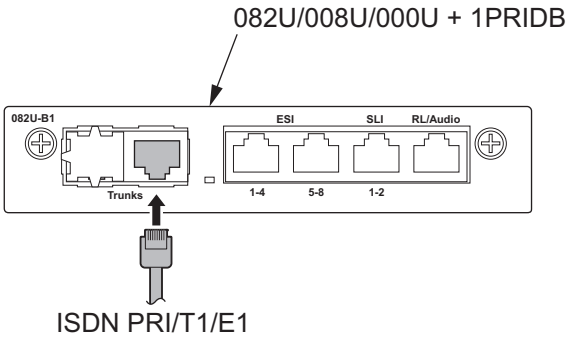

Figure 2-72 Connector of 1PRIDB-C1

3.4.8.1 Connector

The following table shows the pin-outs for the RJ-45 cable connector for PRI/T1/E1 connection.

Table 2-21 RJ-45 PRI/T1/E1 Pin-Outs (J5)

	Pin No.	Pin Function
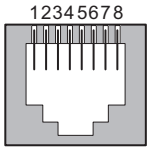	1	RA 1
	2	RB 1
	3	-
	4	TA 1
	5	TB 1
	6	-
	7	-
	8	-

3.4.8.2 Switch Setting

The following figure shows the location of the switches on the IP7WW-1PRIDB-C1 board.

1. Set the switches J6 to J9 according to the system, referring the Table 2-22 Switch Setting of 1PRIDB-C1 on page 2-56.

Table 2-22 Switch Setting of 1PRIDB-C1

Switch No.	Switch Position	Description
J6, J7	2M (default)	Connect PRI/E1 (2.048 Mb/s) line
	1.5M	Connect PRI/T1 (1.544 Mb/s) line
J8, J9	T (default)	T-Bus connection
	S	S-Bus connection

2. Connect the cables from the NT1 Network Termination cable to the J5 connector on the 1PRIDB-C1 board.
3. Assign whether the board works as PRI/T1/E1 by PRG10-51-01.

With Normal operation, Status LED on the base board flashes (100 ms On/100 ms Off) green.

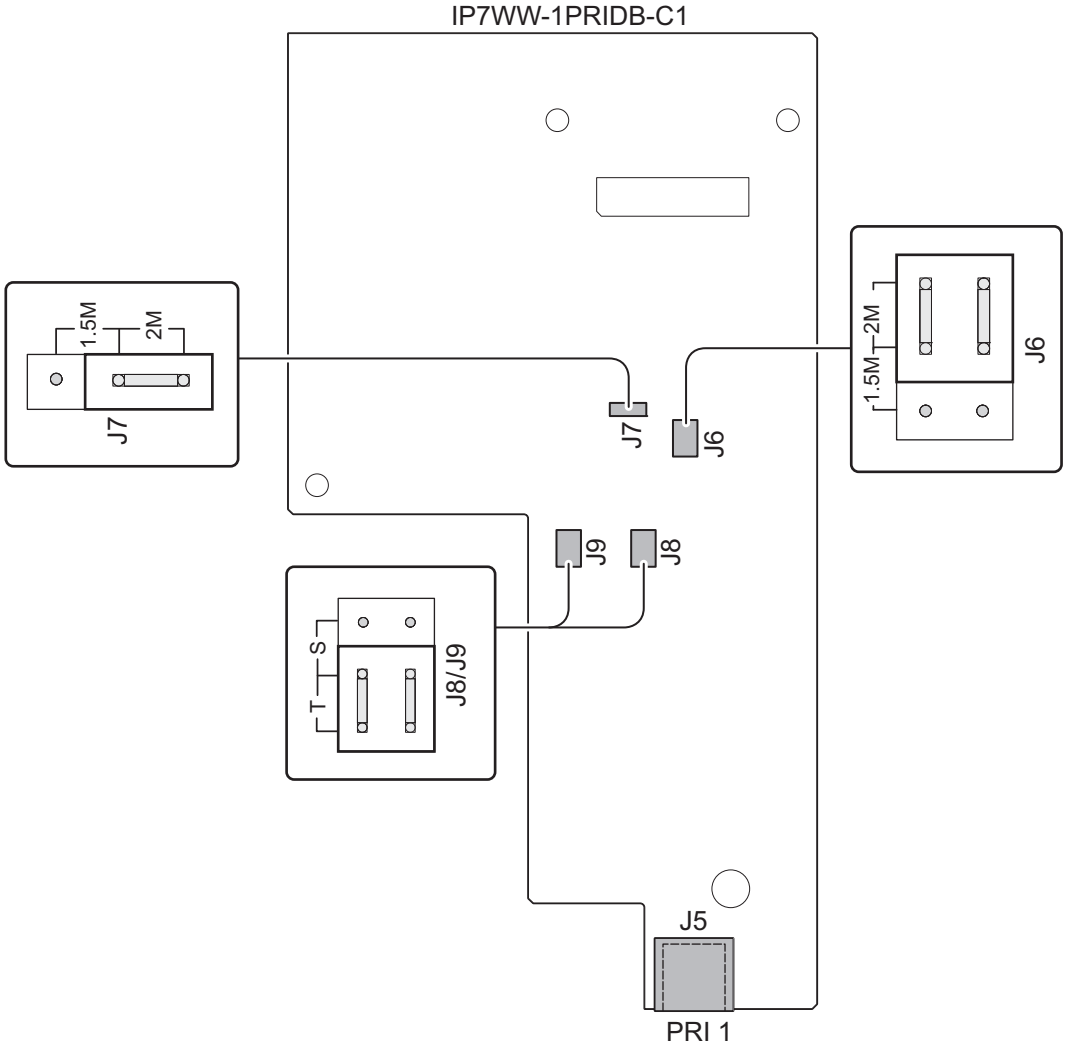

Figure 2-73 Switches Location of 1PRIDB-C1

3.4.9 LED Indication

A Status LED is available only for the base board (308U, 082U, 008U, 000U) and the daughter board (3COIDB, 2BRIDB, 1PRIDB) does not have the status LED, therefore a Status LED on base board is used in common about LED indication related to the daughter board.

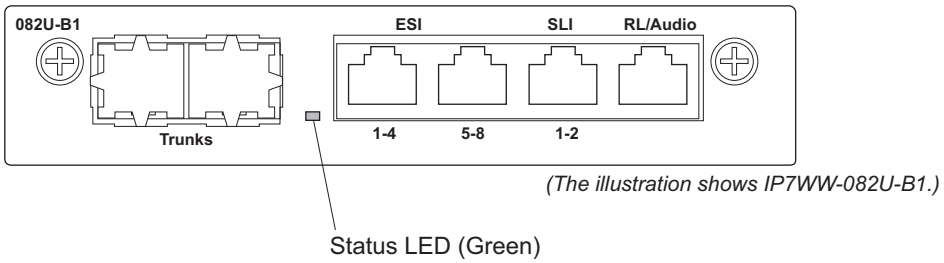

Figure 2-74 Location of Status LED

The order of priority (No.1 ~ 8) is set up to each status and when more than one different status are occurred, the highest priority LED indication pattern (status) will be indicated. Refer to Table 2-23 PRI/BRI LED Indications on page 2-58.

Table 2-23 PRI/BRI LED Indications

Priority No.	Operation Status		LED Indication on the Base Board	Remarks
1	System Initializing		On	
2	The assignment of the board is refused.		3s On / 3s Off	• When you exceed the system capacity. • When the main software version is not matched.
3	Trouble found during self-diagnostics.		1s On / 1s Off	
4	Normal Operation	A Channel is busy (use another from CH1 ~ CHx).	500ms On / 100ms Off	
5		All channels are idle.	100ms On / 100ms Off	
6	Board Busy	A Channel is busy (use another from CH1 ~ CHx).	100ms On / 2s Off	
7		All channels are idle.	Off	
8	Downloading firmware.		80ms On / 80ms Off / 80ms On / 80ms Off / 80ms On / 400ms Off	For 1PRIDB Only

T1 Alarm Mode

Refer to following figure for LED pattern information. LED indications for the T1 are listed in Table 2-24 T1 LED Indications on page 2-58.

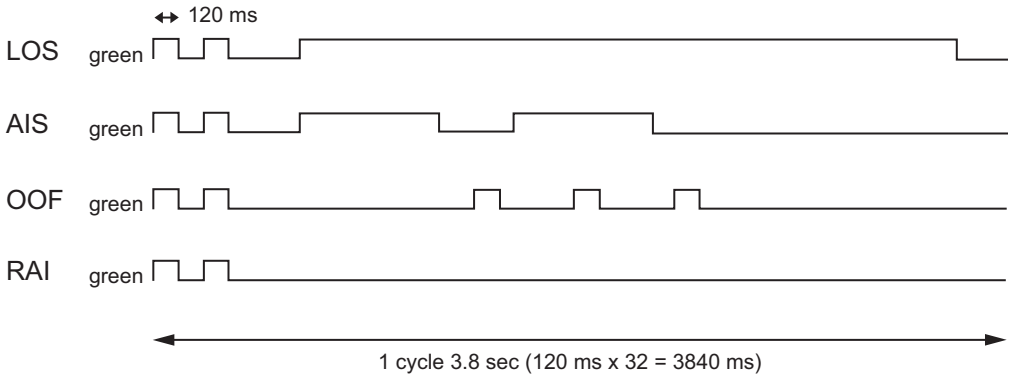

Figure 2-75 Indication Pattern of Layer 1 on T1 Board

Table 2-24 T1 LED Indications

Alarm	Details of the Alarm	The LED Indication Pattern
LOS	LOS (Loss of Signal (Red Alarm)) No Signal (Analog Interface)	Following an alarm blink twice (green), a green LED light up.
AIS	AIS (Alarm Indication Signal (Blue Alarm))	Following an alarm blink twice (green), a green LED flashes on and off slowly twice
OOF	OOF (Out of Frame (Red Alarm))	Following an alarm blink twice (green), a green LED flash on and off 3 times simultaneously.
RAI	RAI (Remote Alarm Indication (Yellow Alarm))	Following an alarm blink twice (green), a green LED goes off.
No alarm	System does LED control	

The order of priority is set up to alarm in the order LOS → AIS → OOF → RAI.

E1 Alarm Mode

Refer to following figure for LED pattern information. LED indications for the E1 are listed in Table 2-25 E1 LED Indications on page 2-59.

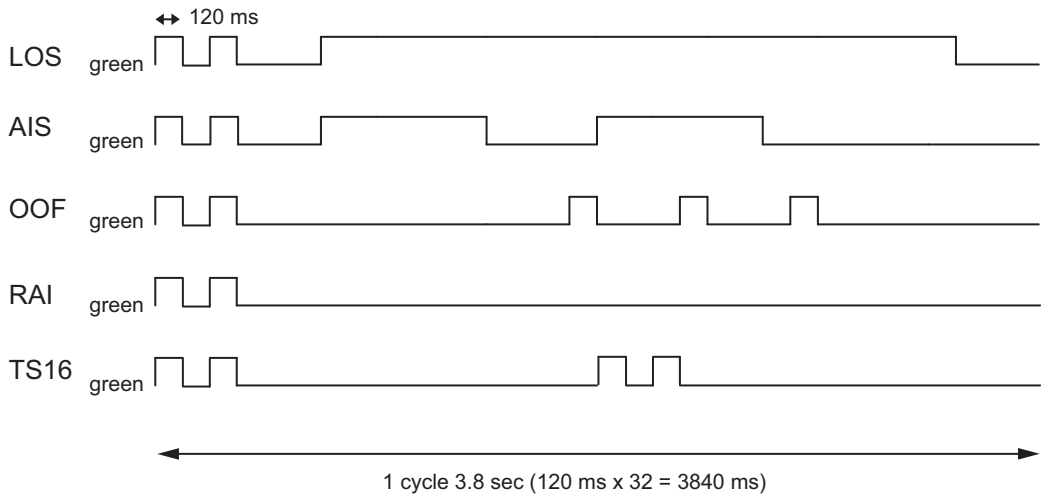

Figure 2-76 LED Indication Pattern of Layer 1 on E1 Board

Table 2-25 E1 LED Indications

Alarm	Details of the Alarm	The LED Indication Pattern
LOS	LOS (Loss of Signal (Red Alarm)) No Signal (Analog Interface)	Following an alarm blink twice (green), a green LED lighting up.
AIS	AIS (Alarm Indication Signal (Blue Alarm))	Following an alarm blink twice (green), a green LED flashes on and off slowly twice
OOF	OOF (Out of Frame (Red Alarm))	Following an alarm blink twice (green), a green LED flash on and off 3 times simultaneously.
RAI	RAI (Remote Alarm Indication (Yellow Alarm))	Following an alarm blink twice (green), a green LED goes off.
TS16	TS16 (Receive Time Slot 16 all Alarm)	An alarm blink repeat twice by 1 cycle.
No alarm	System does LED control	

The order of priority is set up to alarm in the order LOS → AIS → OOF → RAI → TS16.

SECTION 4 INSTALLING THE OPTIONAL INTERFACE BOARDS

4.1 VoIP Board (VOIPDB-C1)

4.1.1 General

The IP7WW-VOIPDB-C1 daughter board is used to convert the RTP (Real Time Transfer Protocol) packets via the IP Network and PCM highway. The daughter board is installed on the CPU board.

4.1.2 Unpacking

Table 2-26 VOIPDB-C1 Packing List

Items	List of Contents	QTY
IP7WW-VOIPDB-C1	IP7WW-VOIPDB-C1	1
	3 x 8 Screw with Washer and Spring Washer	4

4.1.3 Installing the VOIPDB-C1 Board

The boards are hot swappable. Do not remove or install from the chassis when powering up.

- ***Do not remove or install the CPU board with the power on.***
- ***If Expansion Chassis are installed, turn the power on/off in the order of Expansion 2 Chassis, Expansion 1 Chassis and then Main Chassis.***

1. Turn off the system power.
2. Loosen two screws and pull out the CPU board.

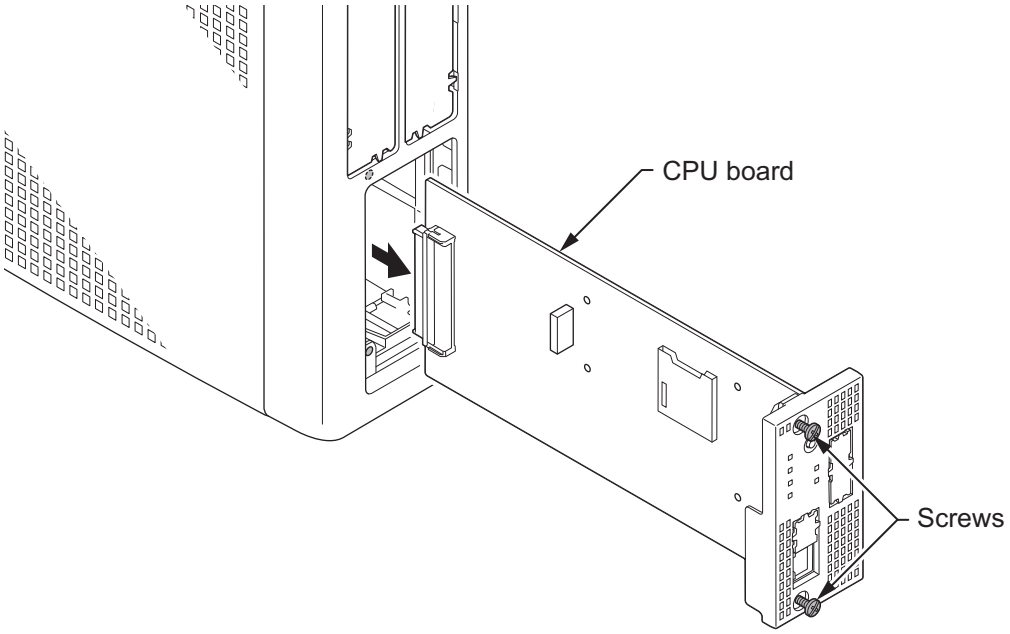

Figure 2-77 Removing the CPU Board

3. Cut and remove the plastic knockout.

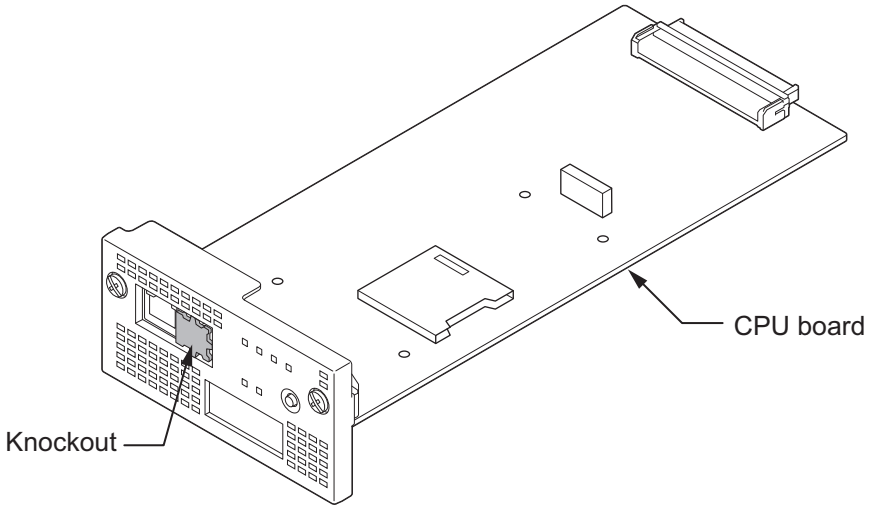

Figure 2-78 Removing the Plastic Knockout

4. Install the VOIPDB-C1 board to J2 connector on the CPU board, and tighten the four screws.

Be careful not to damage the components on the CPU board when installing.

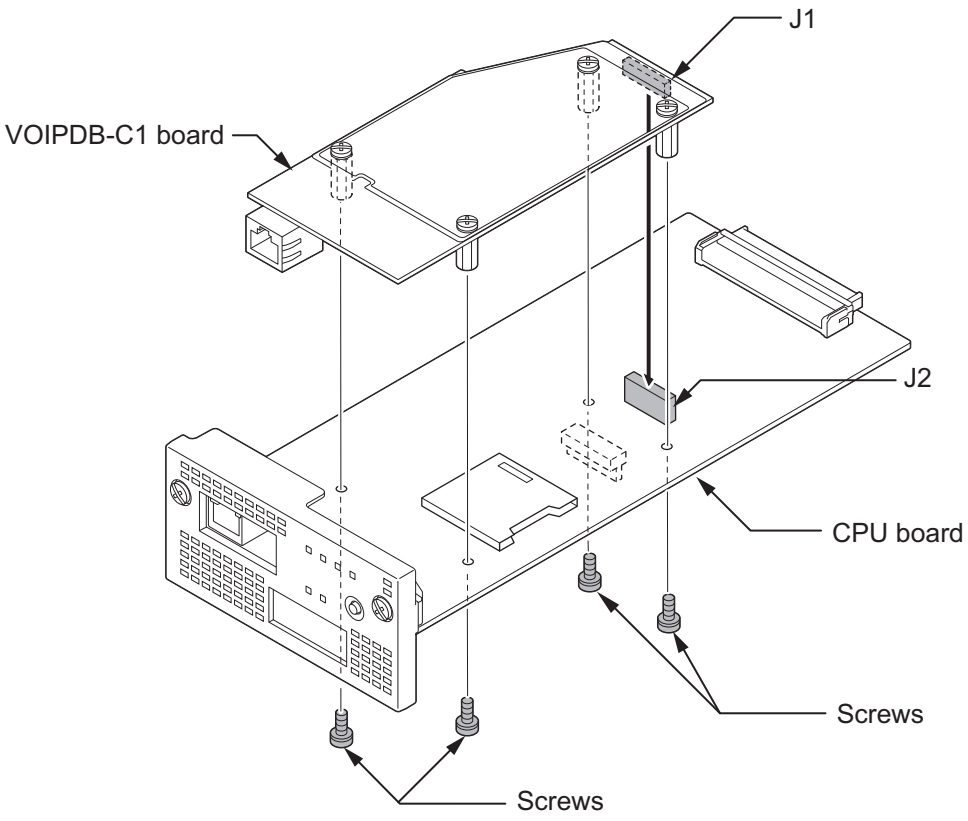

Figure 2-79 Installing the VOIPDB-C1 Board

When the VOIPDB-C1 and EXIFB-C1 are mounted on the CPU board, refer to the following installation as Figure 2-80 Installing the VOIPDB-C1 and EXIFB-C1 on page 2-63.

Be careful not to damage the components on the CPU board and EXIFB daughter board when installing.

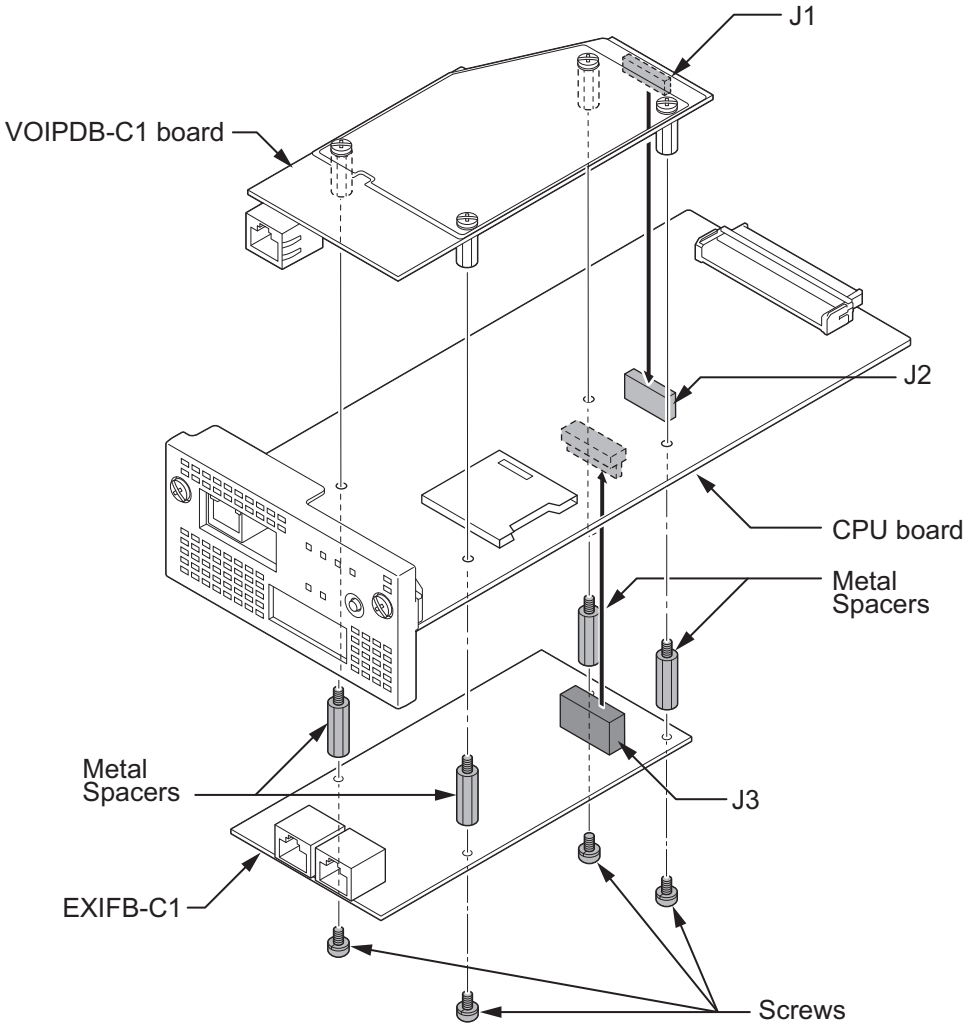

Figure 2-80 Installing the VOIPDB-C1 and EXIFB-C1

5. Insert the CPU board in the guide rail of chassis and push it securely into position, and tighten the two screws.

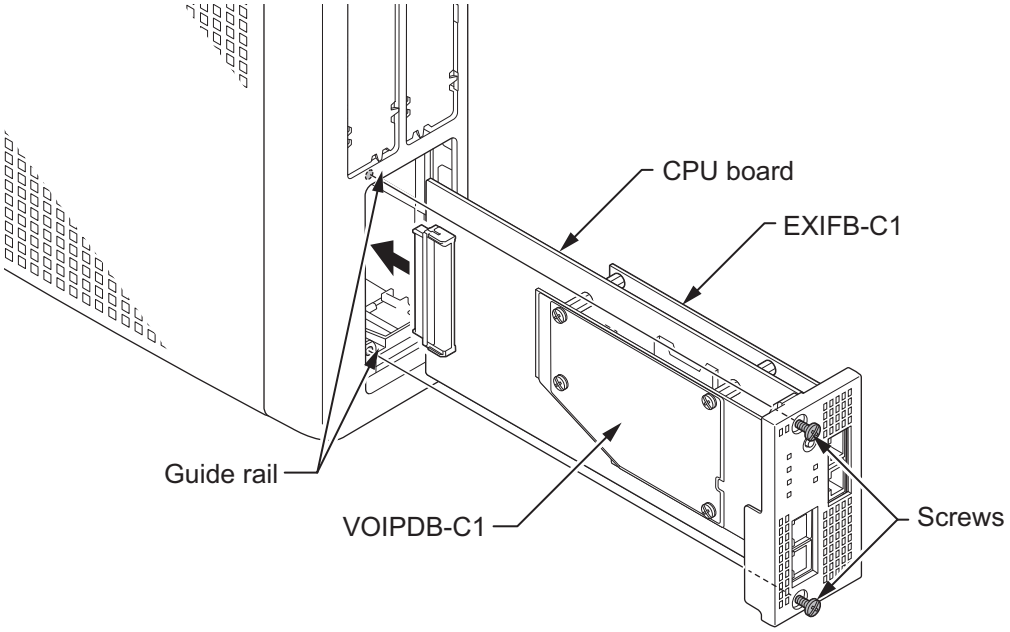

Figure 2-81 Installing the CPU Board

6. Connect the VOIPDB-C1 to a Switching hub using a LAN Cable.

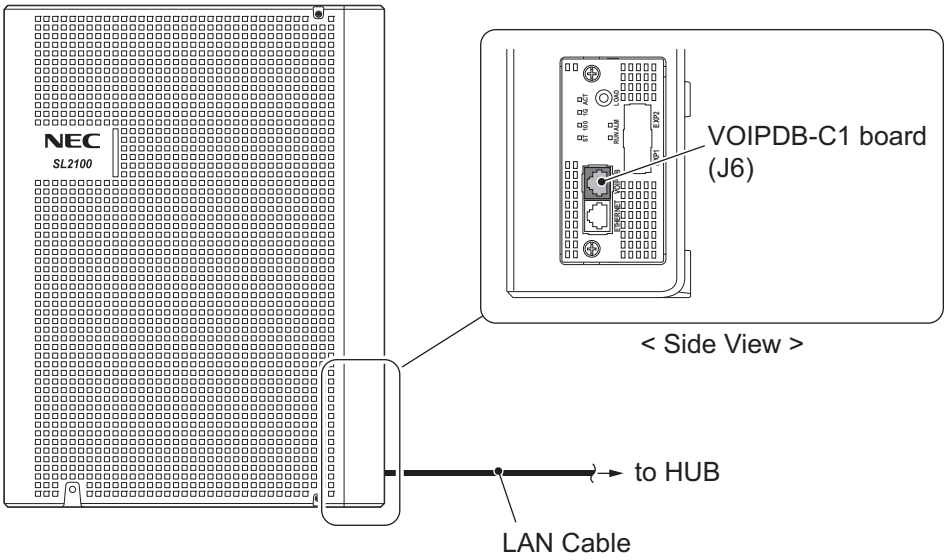

Figure 2-82 Connecting a LAN Cable

7. Refer to the SL2100 Programming Manual for detailed programming instructions.
The VoIP feature requires system configuration.

4.1.4 LED Indication

LED indications for the IP7WW-VOIPDB-C1 are listed Table 2-27 VOIPDB LED Indications on page 2-64. Each LED is listed with its associated function and operational status.

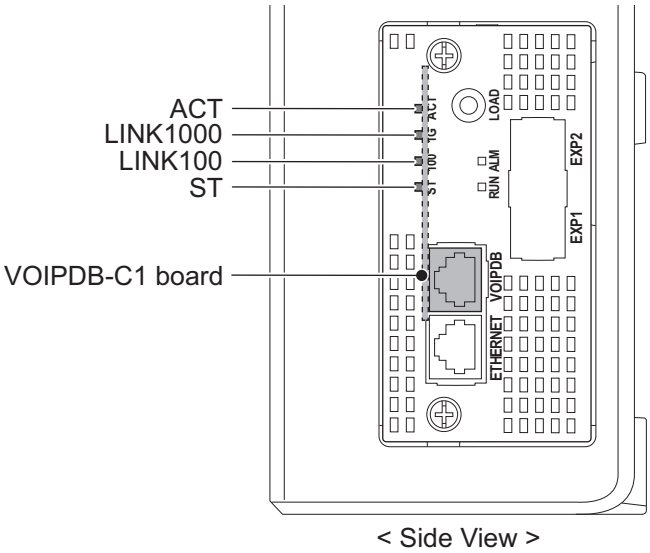

Figure 2-83 Location of LEDs

Table 2-27 VOIPDB LED Indications

LED	Function	LED Status	Operation status
ACT	**Link activity** or data transmission and reception.	On Green	LED lights when link up is completed. LED flash when data is transmitting or receiving.
LINK1000	**1000Base-T link speed** indicator	On Yellow	Lights up when 1000Base-T link up.
LINK100	**100Base-TX link speed** indicator.	On Red	Lights up when 100Base-TX link up.

LED	Function	LED Status	Operation status
ST	**Status** indicator.	On Red	Table 2-28 Operation of VOIPDB LED Indications on page 2-65

Table 2-28 Operation of VOIPDB LED Indications

LED				Operation status
ACT	LINK1000	LINK100	ST	
Off	Off	Flash	Flash	Internal Error (Hardware Error)
Off	On	Flash	Flash	
On	On	Flash	Flash	
On	Off	Flash	Flash	State of half duplex transmission (Not support) Please change HUB etc. to full duplex transmission.
Flash	Blinking one by one			The firmware is being updated.

4.2 Installing the SD Card (SDVMS/SDVML)

- ***Do not remove or install the CPU board with the power on.***
- ***If Expansion Chassis are installed, turn the power on/off in the order of Expansion 2 Chassis, Expansion 1 Chassis and then Main Chassis.***
- ***When installing a SD card onto the CPU board the system MUST be powered off. Never install or uninstall the SD card while the system is under power.***

1. Turn off the system power.
2. Remove the CPU board and insert the SD card (Label side up) into the slot until it clicks.

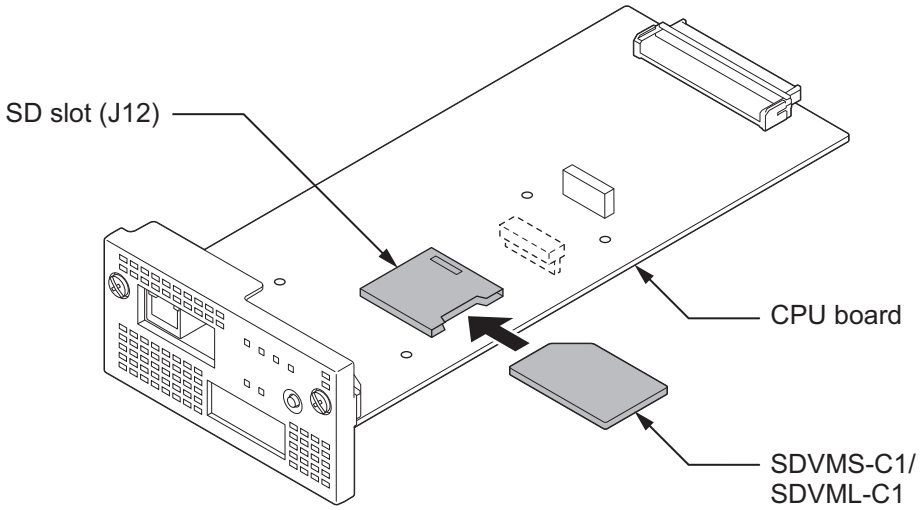

Figure 2-84 Installing the SD Card

3. Reinstall the CPU board into the Chassis.
   To Remove: Carefully push on the SD card until it clicks and release. Card can be removed from the slot.

SECTION 5 INSTALLING THE MULTILINE TELEPHONES AND OPTIONAL TERMINALS

5.1 Installing the Hybrid/Digital Multiline Telephones

There are three types of Multiline Telephones available in the SL2100 system.

- IP7WW-12/24TXH-A1 TEL
- IP7WW-12/24TXH-B1 TEL
- IP7[ ]-8IPLD-C1 TEL

5.1.1 Location of Controls

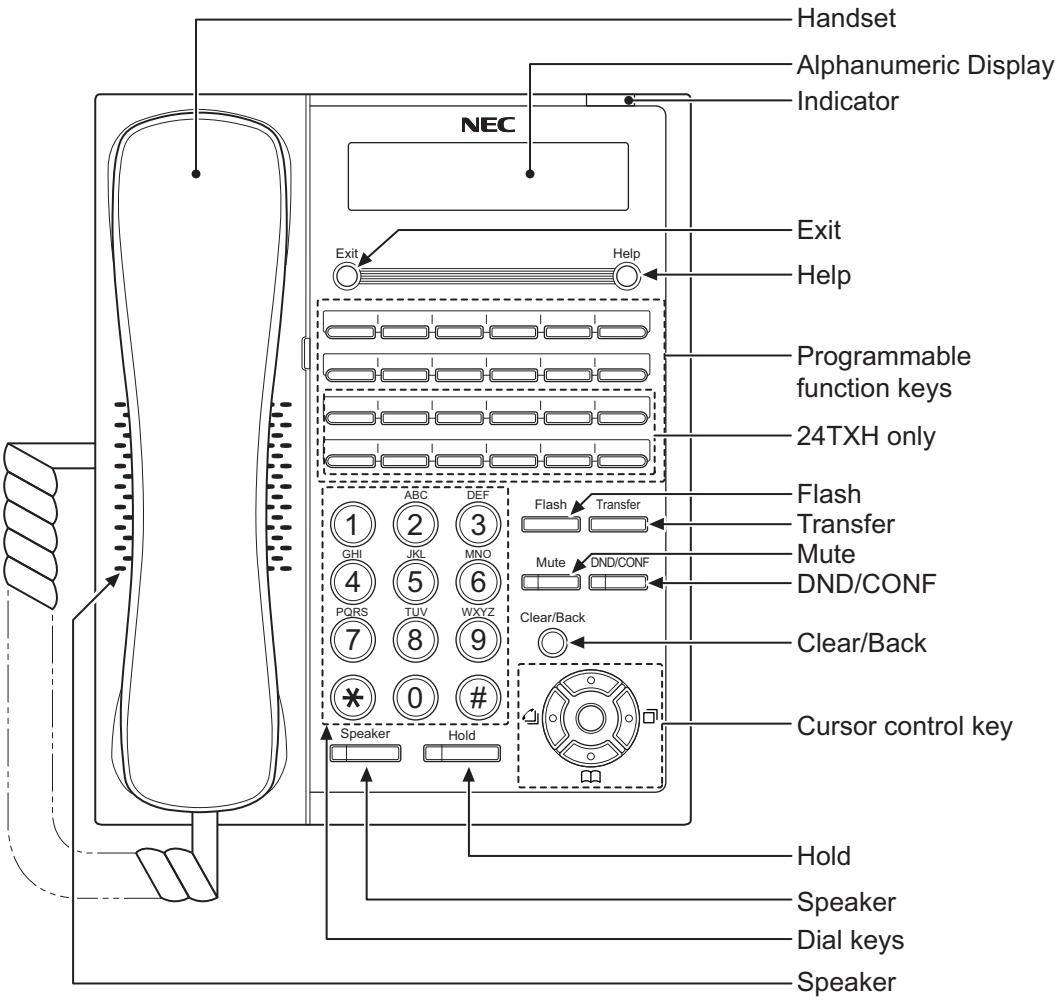

Figure 2-85 Hybrid Multiline Telephone (12TXH-A1/24TXH-A1)

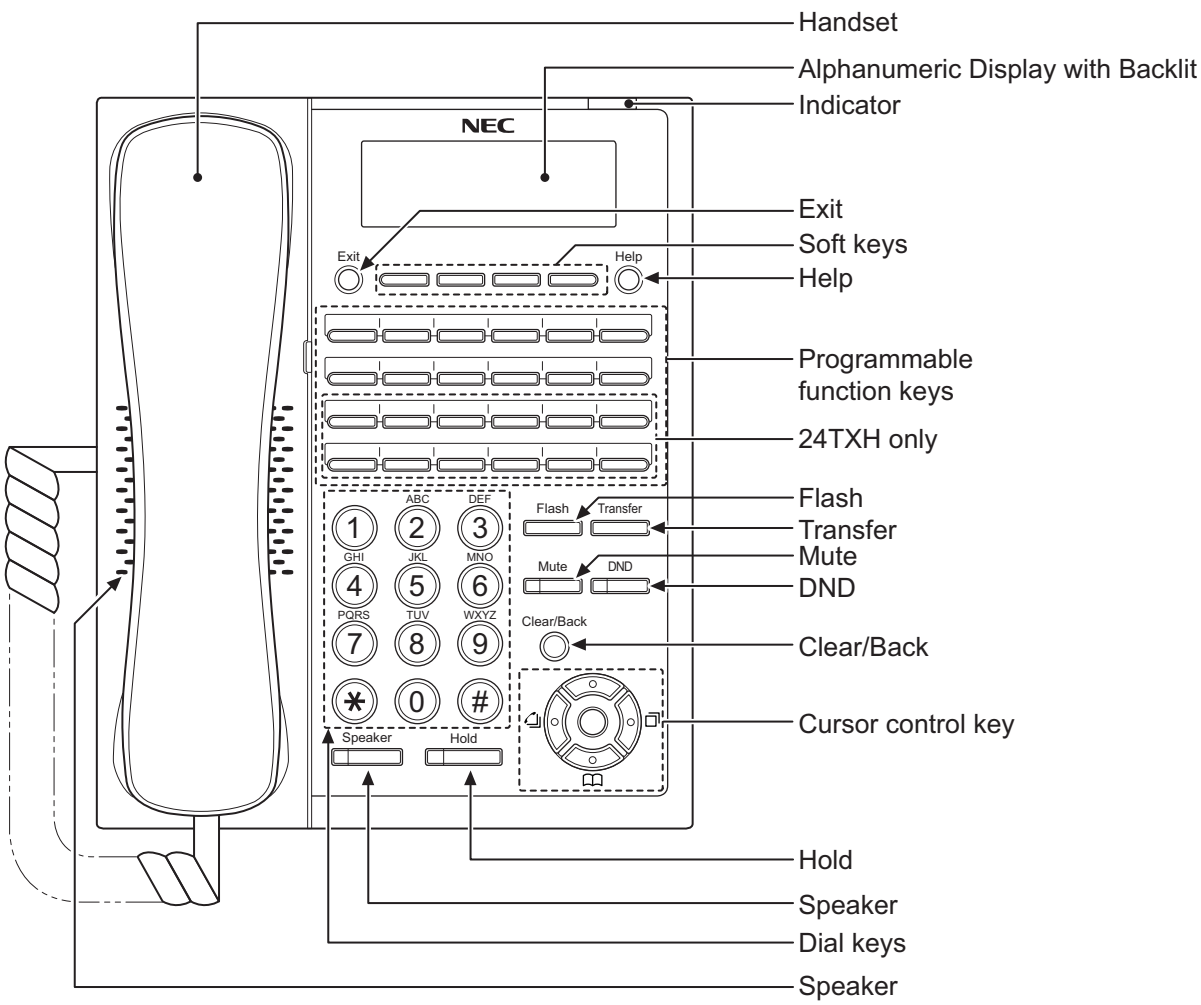

Figure 2-86 Digital Multiline Telephone (12TXH-B1/24TXH-B1)

Table 2-29 Hybrid/Digital Multiline Telephone Functions (12TXH-A1/24TXH-A1/12TXH-B1/24TXH-B1)

Functions	12TXH-A1	24TXH-A1	12TXH-B1	24TXH-B1
Programming Keys	12 (Busy lamp field: Red-Green)	24 (Busy lamp field: Red-Green)	12 (Busy lamp field: Red-Green)	24 (Busy lamp field: Red-Green)
Display	16-digit x 2 lines without Backlit		24-digit x 3 lines with Backlit	
Handsfree	Half-duplex		Full-duplex	
Wall-Mount Kit	Yes (Built-in)			
SoftKeys	No		Yes	
Backlit Dial Pad	No			
Incoming LED	2 colors (Red/Green)		2 colors (Red/Green)	
Connected to	Hybrid Extension Port		Digital Extension Port	
Headset Port	No (use Handset Port)		Yes	
Power Feeding	Hybrid Extension Port		Digital Extension Port	

5.1.2 Multiline Telephone Legs Adjustment

The Multiline Telephone provides adjustable legs for angling the phone to best suit each user. The leg can be set for two different heights (Low/High).

5.1.2.1 Low Position Setting

1. Turn telephone over (button side down).
2. Adjust the legs to desired height.

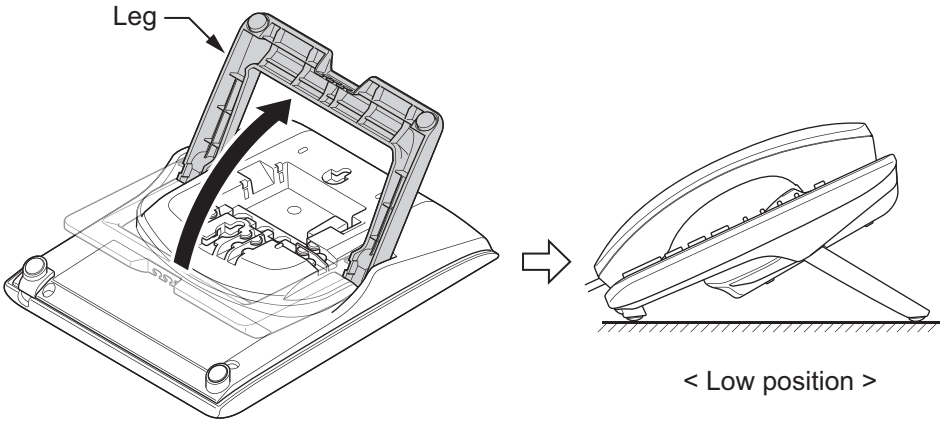

Figure 2-87 Leg Setting for Low Position

3. Lead the Line and Handset cords through the applicable grooves.

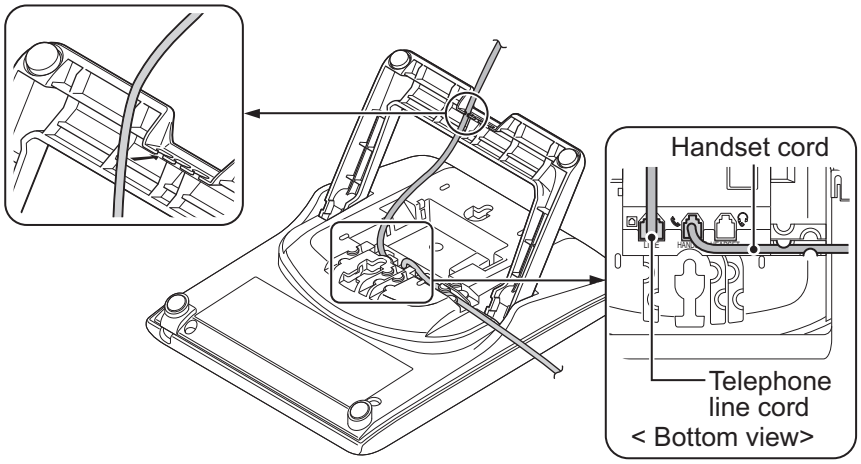

Figure 2-88 Cabling of Multiline Telephone

4. Turn telephone over (button side up).

5.1.2.2 High position setting

1. Turn telephone over (button side down).

2. Pull up the Leg Stoppers.

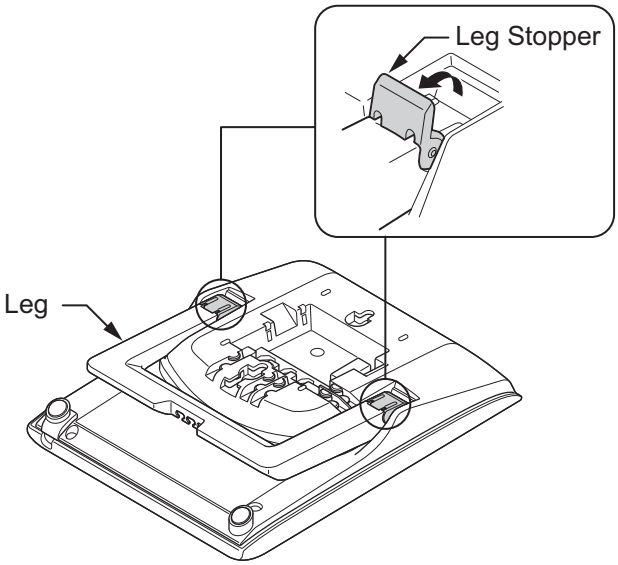

Figure 2-89 Leg Stopper

3. Adjust the leg to desired height.

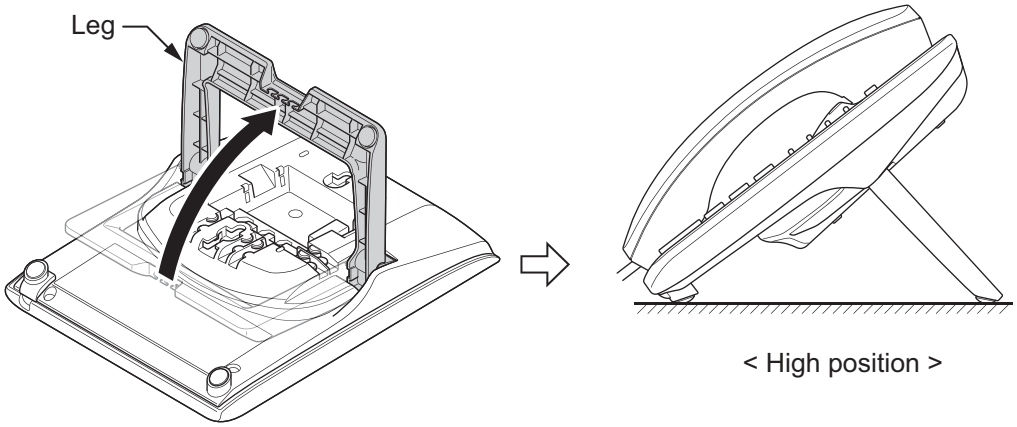

Figure 2-90 Leg Setting for High Position

4. Lead the Line and Handset cords through the applicable grooves.
(Refer to Figure 2-88 Cabling of Multiline Telephone on page 2-68)

5.1.3 Wall-Mounting the Multiline Telephone

1. Arrange the cables and put down the leg as shown below.

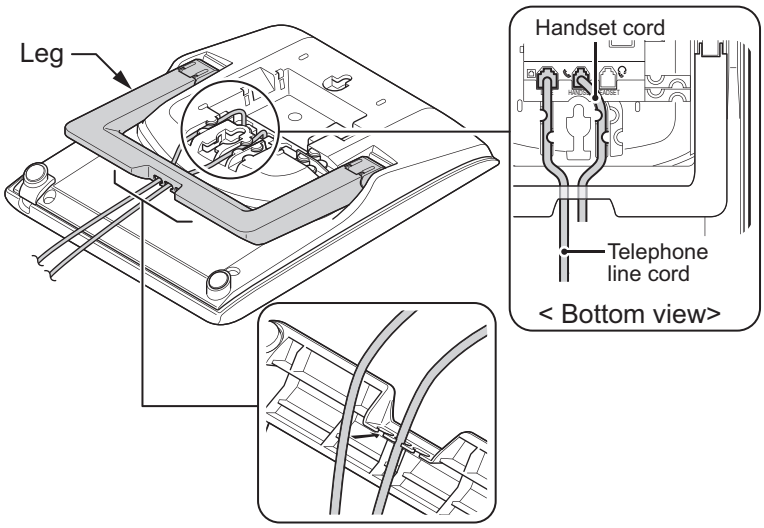

Figure 2-91 Cabling for Wall-Mount

2. Remove the switch-hook from the unit. Turn the tab toward the top. Then slide the hook-switch into position.

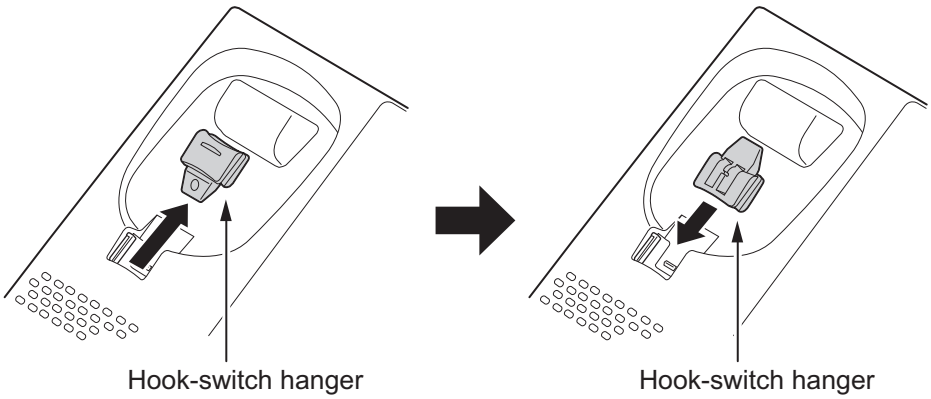

Figure 2-92 Hook-Switch Hanger

3. Install two screws into a wall. The screw heads must be remained about 3 mm (0.12″).

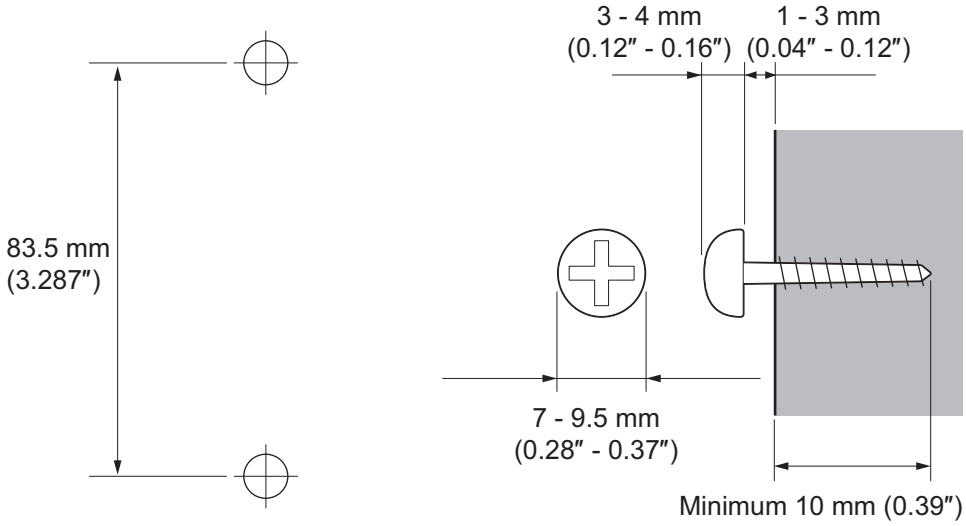

Figure 2-93 Wall-Mount Screw Guide

4. Mount the telephone on the wall.

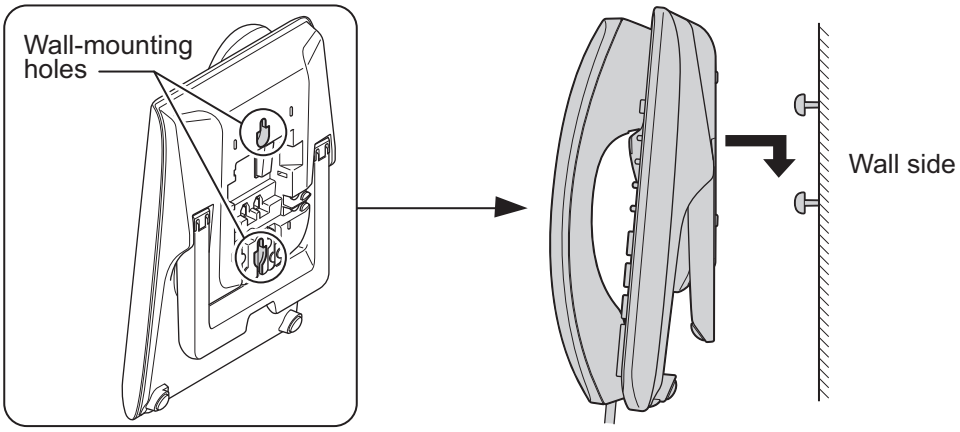

Figure 2-94 Mounting the Multiline Telephone

5.2 Installing the IP Multiline Telephone (IP7[ ]-8IPLD-C1 TEL)

5.2.1 Location of Controls

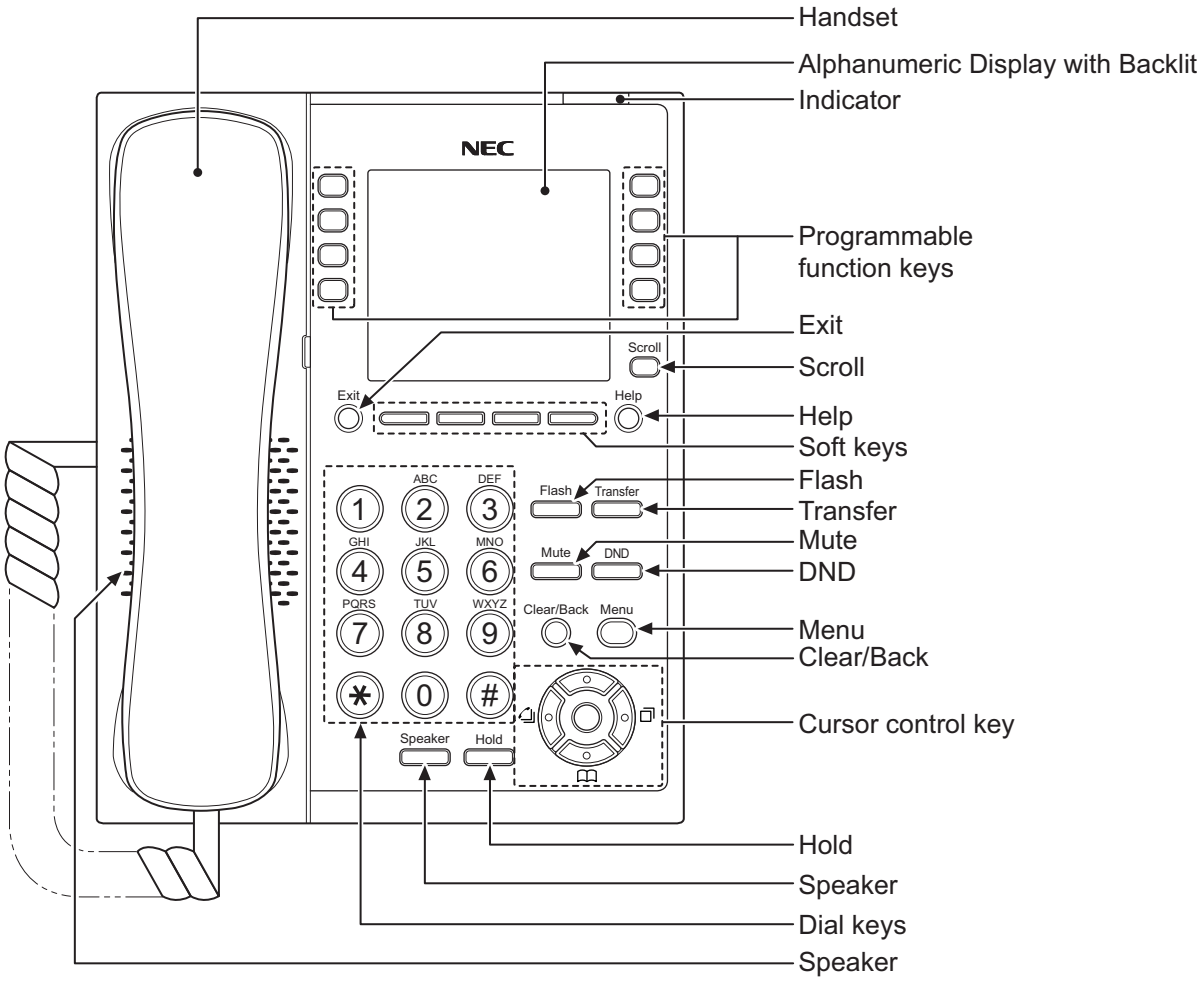

Figure 2-95 IP Multiline Telephone (8IPLD)

Table 2-30 IP Multiline Telephone Functions (8IPLD)

Functions	8IPLD
Programming Keys	8 (Busy lamp field: Red-Green)
Display	168 x 128 dots with Backlit
Handsfree	Full-duplex
Wall-Mount Kit	Yes (Optional)
SoftKeys	Yes
Backlit Dial Pad	No
Incoming LED	2 colors (Red/Green)
Connected to	Ethernet Port at LAN (10M/100M/Giga)
Headset Port	Yes
Power Feeding	PoE

5.2.2 System Connection

The IP Multiline Telephone is connected via PoE SWITCH.

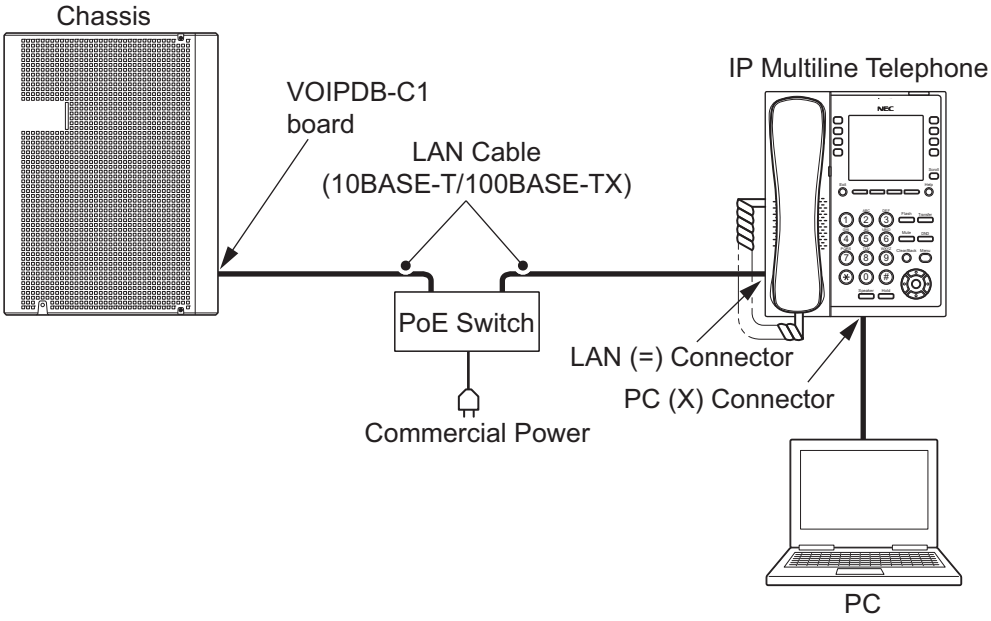

Figure 2-96 IP Multiline Telephone Connection

5.2.3 Connectiong the IP Multiline Telephone

1. Connect the LAN Network 10Base-T/100Base-TX cable to the **LAN(=)** connector.
2. Power Feeding is used by PoE, and AC/DC Adapter is not used.
3. The IP Multiline Telephone has a Switching HUB to connect a PC to the LAN Network. Connect the 10Base-T/100Base-TX straight cable used for connection to the PC to the **PC(X)** connector and to the PC.

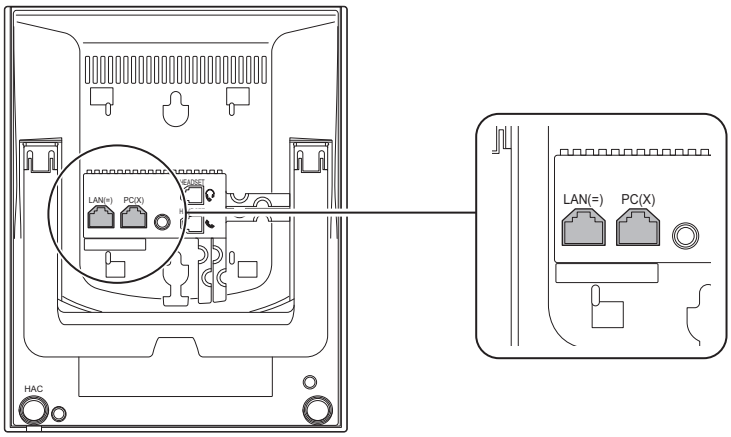

< Bottom view>

Figure 2-97 IP Multiline Telephone Connectors

5.2.4 Applying Power to the IP Multiline Telephone

IP Multiline Telephone (IP7[ ]-8IPLD-C1) supports PoE power source for the Telephone.

- PoE(IEEE802.3af)
  PoE (Power Over Ethernet) is a LAN technology that allows standard 10Base-T/100Base-TX data cables to pass electrical current from a power source to a requesting end device.

5.2.5 IP Multiline Telephone Legs Adjustment

Legs adjustment is the same as other Multiline Telephone.
Refer to Multiline Telephone Legs Adjustment on page 2-68.

5.2.6 Wall-Mounting the IP Multiline Telephone

1. Arrange the cables and put down the leg as shown below.

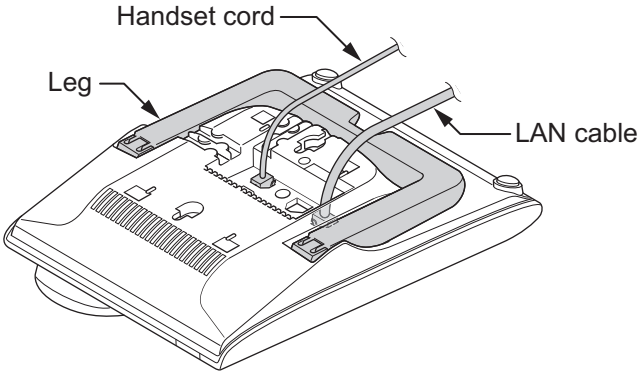

Figure 2-98 Put down the leg

2. Attach the IP4WW-WALL MOUNT UNIT to the bottom panel and arrange the cables as shown below.

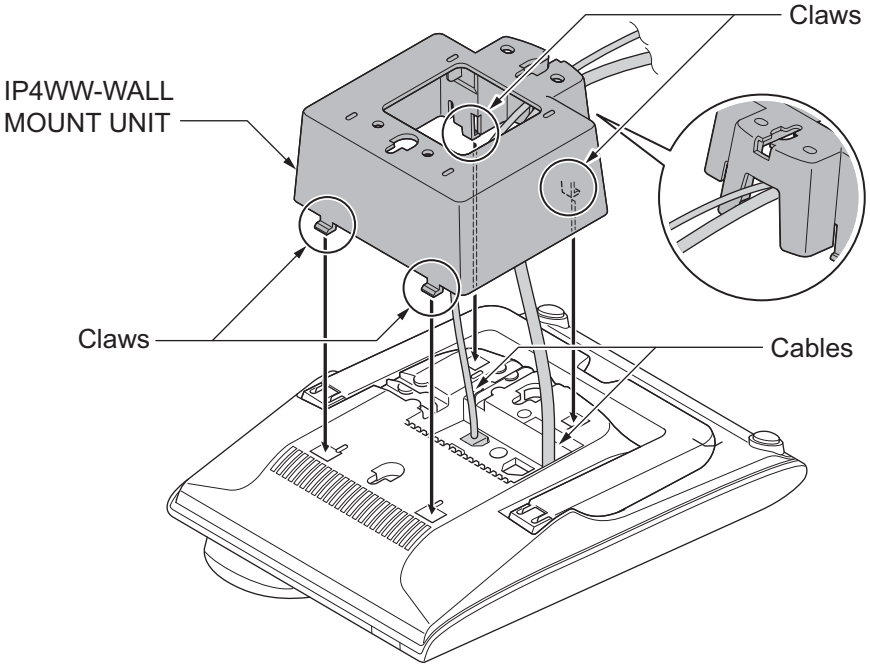

Figure 2-99 Wall-Mount Unit

3. Remove the switch-hook from the unit. Turn the tab toward the top. Then slide the hook-switch into position. Refer to Figure 2-92 Hook-Switch Hanger on page 2-70.

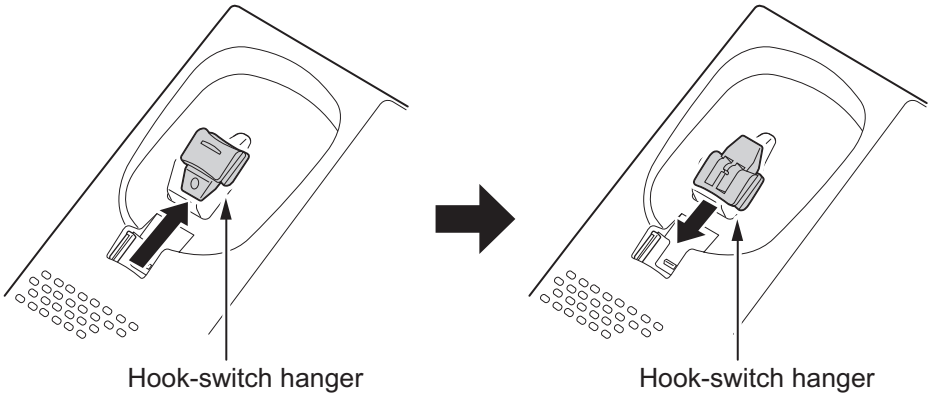

Figure 2-100 Hook-Switch Hanger

4. Install two screws into a wall. The screw heads must be remained about 3 mm (0.12″).

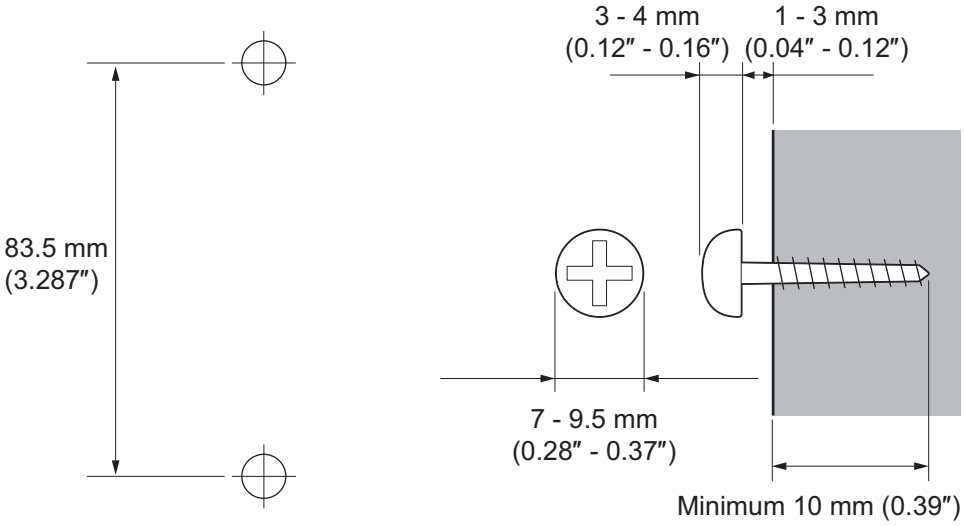

Figure 2-101 Wall-Mount Screw Guide

5. Mount the telephone on the wall.

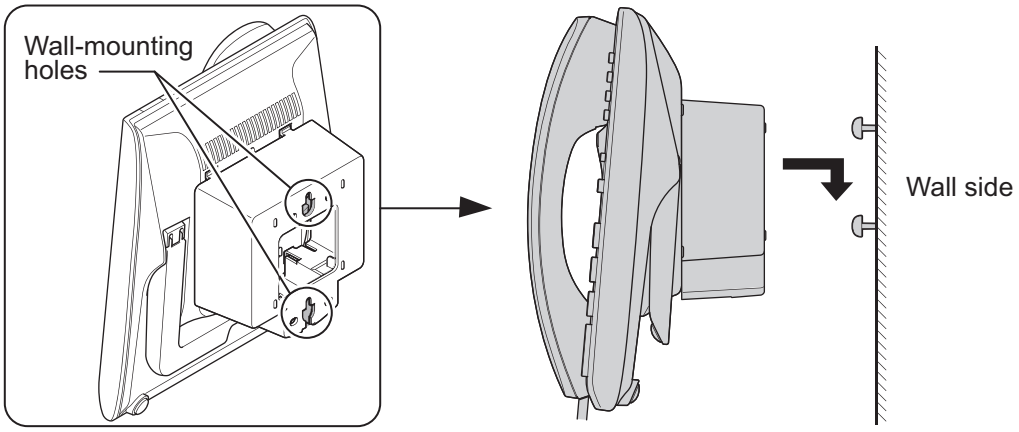

Figure 2-102 Mounting the IP Multiline Telephone

5.3 Installing the DSS Console

The 60D DSS-A1 Console can be installed on the last hybrid extension ports (ST8/ST16/ST24/ST40/ST48/ST56/ST72/ST80/ST88) of each 308U-A1/008U-C1 board directly. The 60D DSS-B1 Console can be installed on any digital extension port of each 082U-B1 board directly. The pair extension for the DSS Console is assigned using system programming.

For the settings, refer to the SL2100 Features & Specifications Manual.

5.3.1 DSS Console Leg Adjustment

The DSS Console provides the leg for angling the console to best suit each user. The leg can be set for two different heights (Low/High).

5.3.1.1 Low Position Setting

1. Turn DSS Console over (button side down).
2. Adjust the legs to desired height.

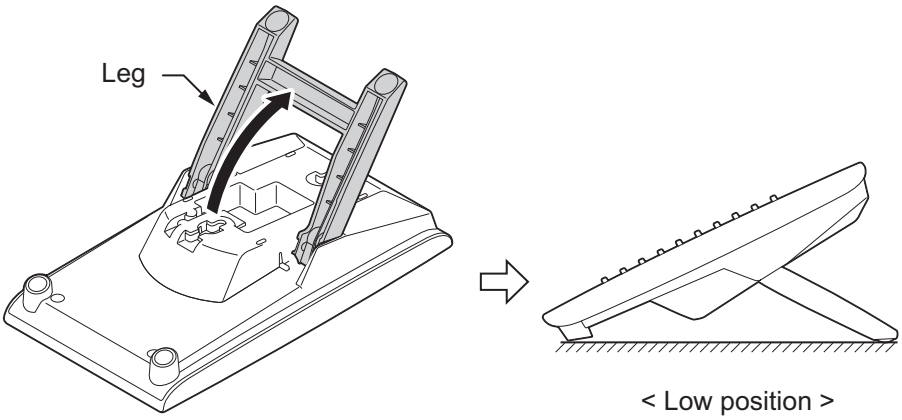

Figure 2-103 Low Position Setting

3. Lead the Line cord through the applicable grooves.

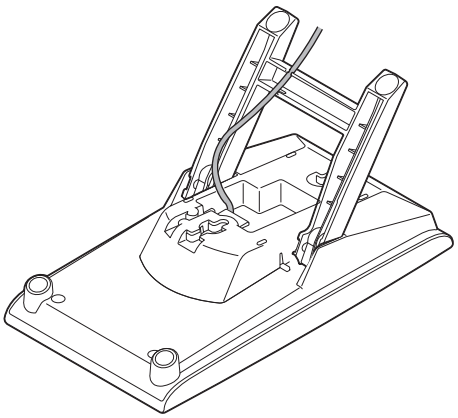

Figure 2-104 Cabling of DSS

5.3.1.2 High position setting

1. Turn DSS Console over (button side down).

2. Pull up the Leg Stoppers.

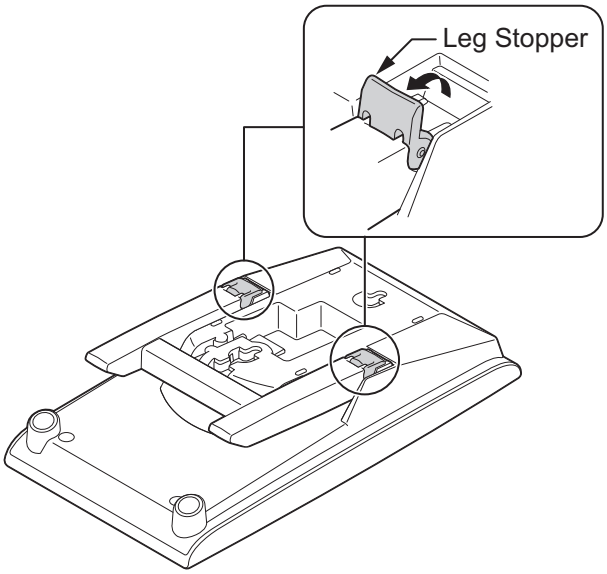

Figure 2-105 Leg Stopper of DSS Console

3. Adjust the leg to desired height.

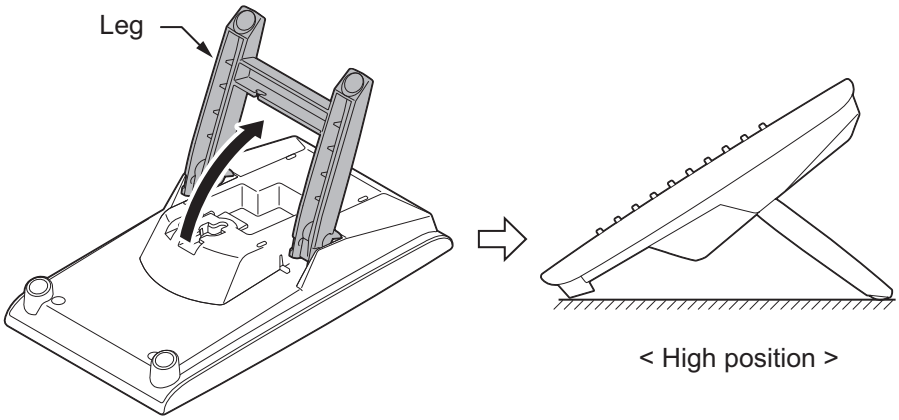

Figure 2-106 High Position Setting

4. Lead the Line cord through the applicable grooves.
(Refer to Figure 2-104 Cabling of DSS on page 2-76)

5.3.2 Wall-Mounting the DSS Console

1. Lift the leg and lead the cable through the applicable grooves. Refer to Figure 2-107 Cabling for Wall-Mount on page 2-78. Lower leg to stowed position.

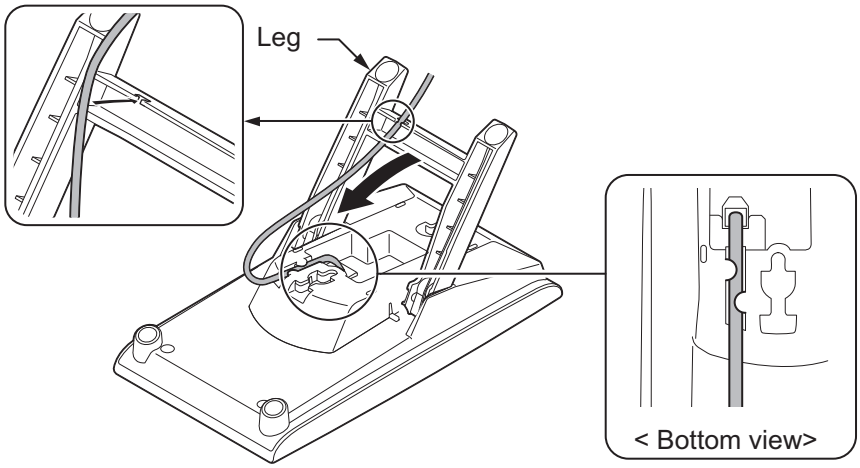

Figure 2-107 Cabling for Wall-Mount

2. Install two screws into a wall. The screw heads must be remained about 3 mm (0.12″).

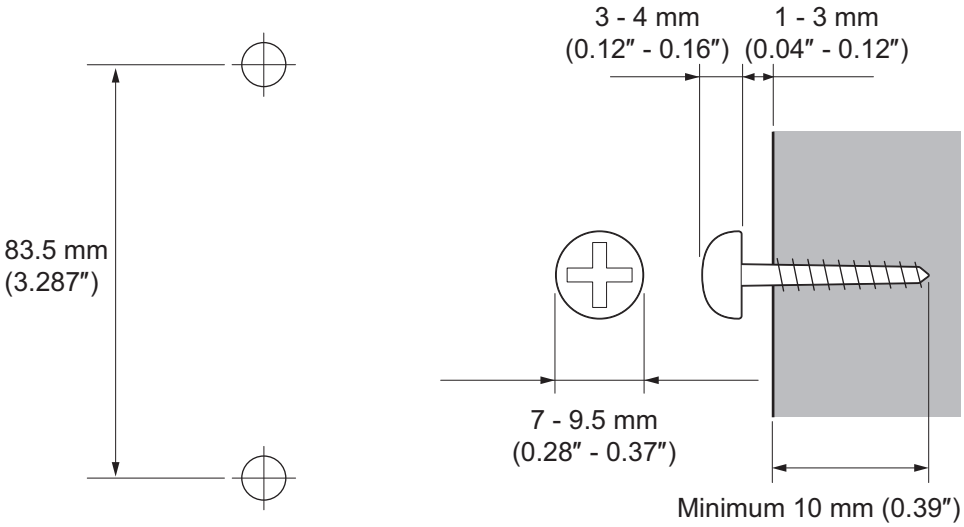

Figure 2-108 Wall-Mount Screw Guide

3. Mount the DSS Console to the wall.

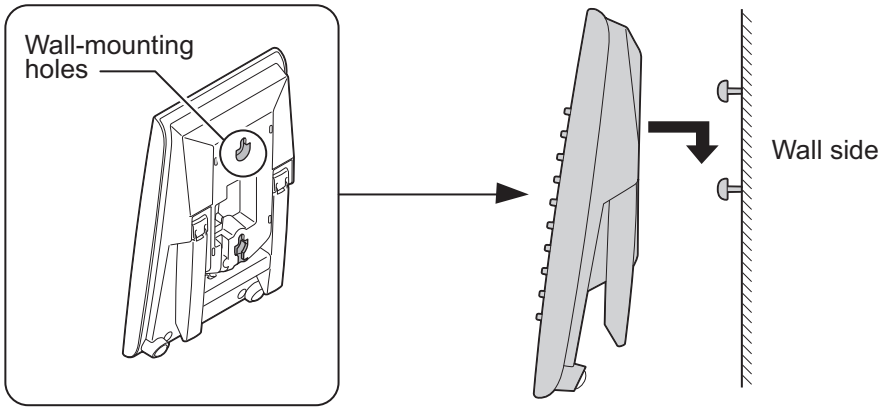

Figure 2-109 Mounting the DSS

5.4 Installing the Headset

The Multiline Telephone user can utilize a customer-provided headset in place of the handset. Like using Handsfree, using the headset frees up the user's hands for other work. However, Headset Operation provides privacy not available from Handsfree.

For 4W Hybrid Multiline Telephone

1. Remove the Handset cord from the Multiline Telephone.
2. Connect the Headset cord into the Handset socket.

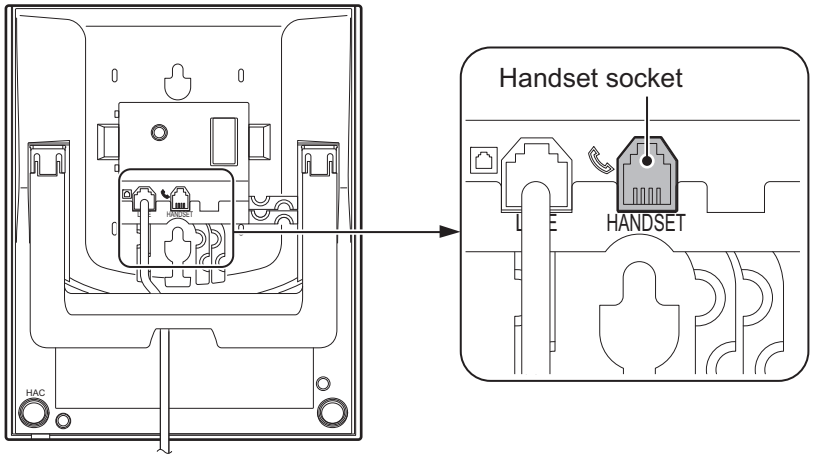

< Bottom view>

Figure 2-110 Headset Socket (4W Hybrid Multiline Telephone)

For Digital Multiline Telephone and IP Multiline Telephone

1. Connect the Headset cord into the Headset socket.

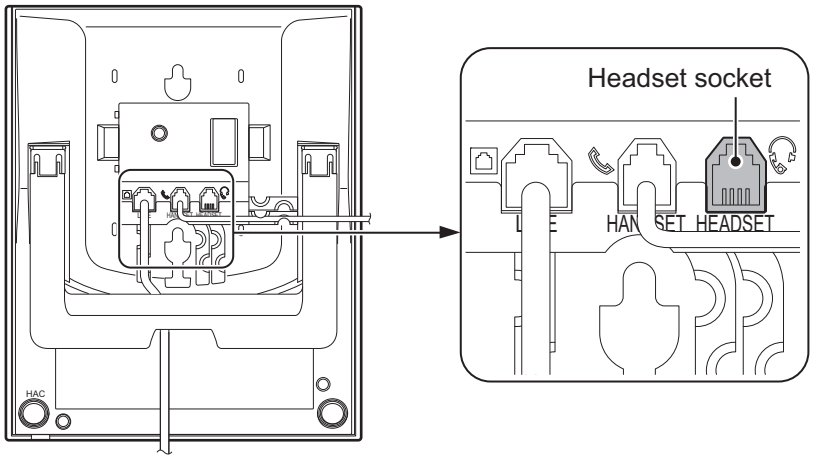

< Bottom view>

Figure 2-111 Headset Socket (Digital Multiline Telephone)

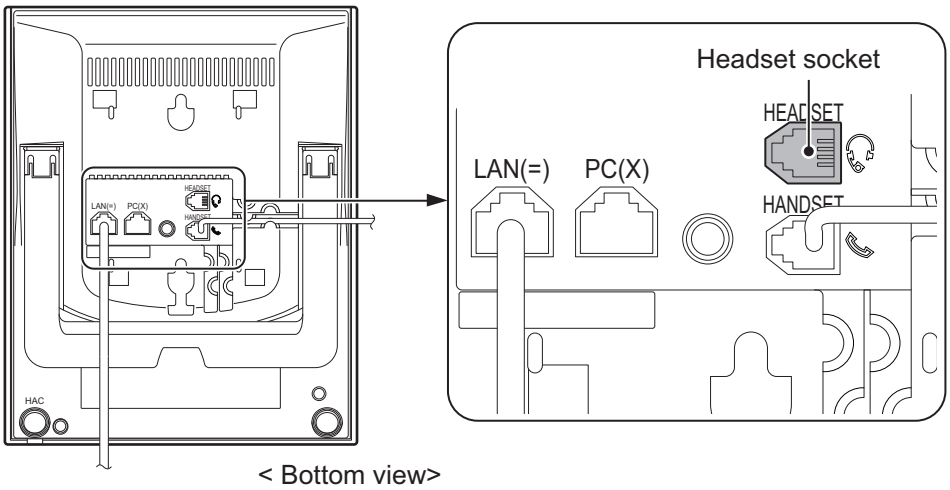

Figure 2-112 Headset Socket (IP Multiline Telephone)

The headset configuration is assigned using system programming.

5.5 Installing the Doorphone Box, Security Sensor Device (locally procure)

The Doorphone Box is a self-contained, water-resistant, Intercom unit typically used to monitor an entrance door. A visitor at the door can press the Doorphone Box call button (like a door bell). The Doorphone Box then sends chime tones to all extensions programmed to receive chimes. The External Sensor device can be connect to the system. The system can have up to six Doorphone Boxes or Security Sensor devices. A maximum two Doorphone Boxes or Security Sensor devices can be connected per 308U-A1 or 082U-B1.

5.5.1 Wall-Mounting the Doorphone

1. Remove the screw on the front of the Doorphone Box.
2. Remove the Wall-Mount bracket from the Doorphone Box.
3. Connect the cable to the screw terminals on the Doorphone box. (No polarity sensitive)

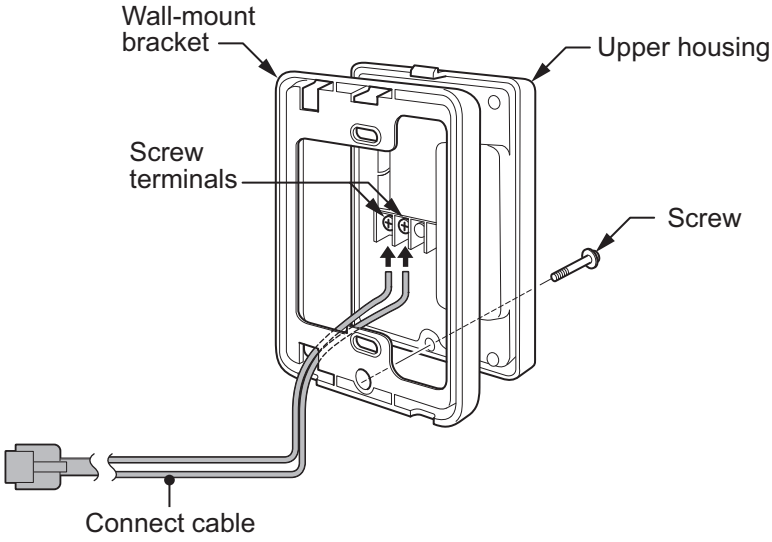

Figure 2-113 Doorphone Box and Bracket

4. Mount the Wall-Mount bracket on the wall using supplied screws.

5. Replace the Upper housing and tighten the screw.

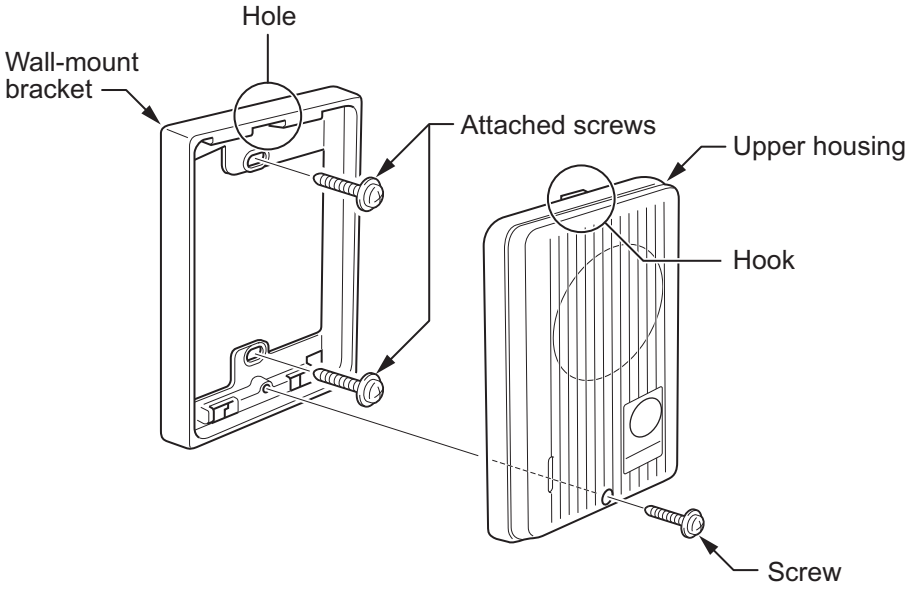

Figure 2-114 Doorphone

5.5.2 Connecting the Doorphone/External Sensor Device

The Doorphone Box/Security Sensor device configuration is assigned using by hardware switch setting on the 308U-A1/082U-B1.

1. Use Needle-nose pliers to set the switches J8 and J9 to the DOOR1 (Sensor1)/DOOR2 (Sensor2) side as required. (The default is SLT1/SLT2 side.)

   Activation of sensor mode should be set on Doorphone by "Hard-Switch".

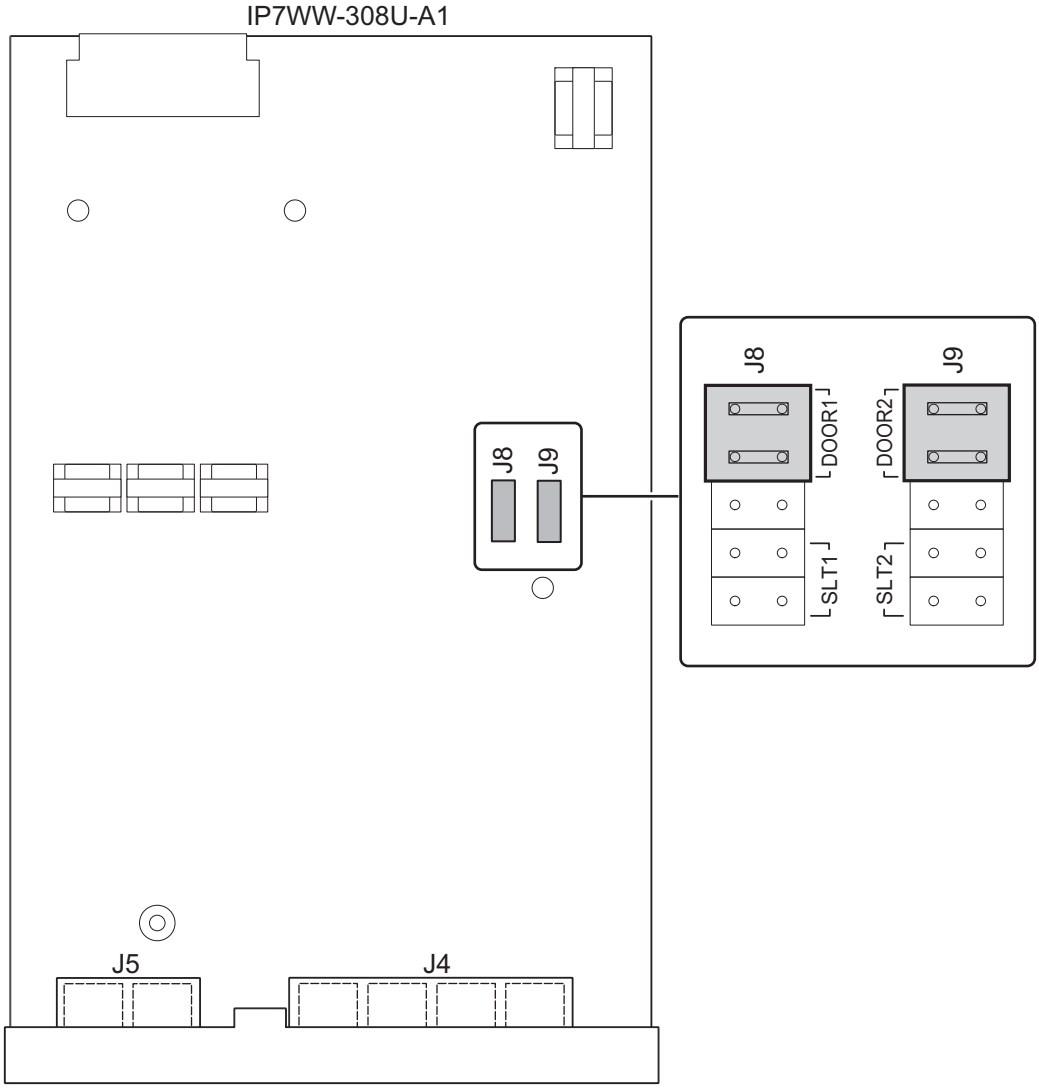

Figure 2-115 Switches Location of 308U-A1

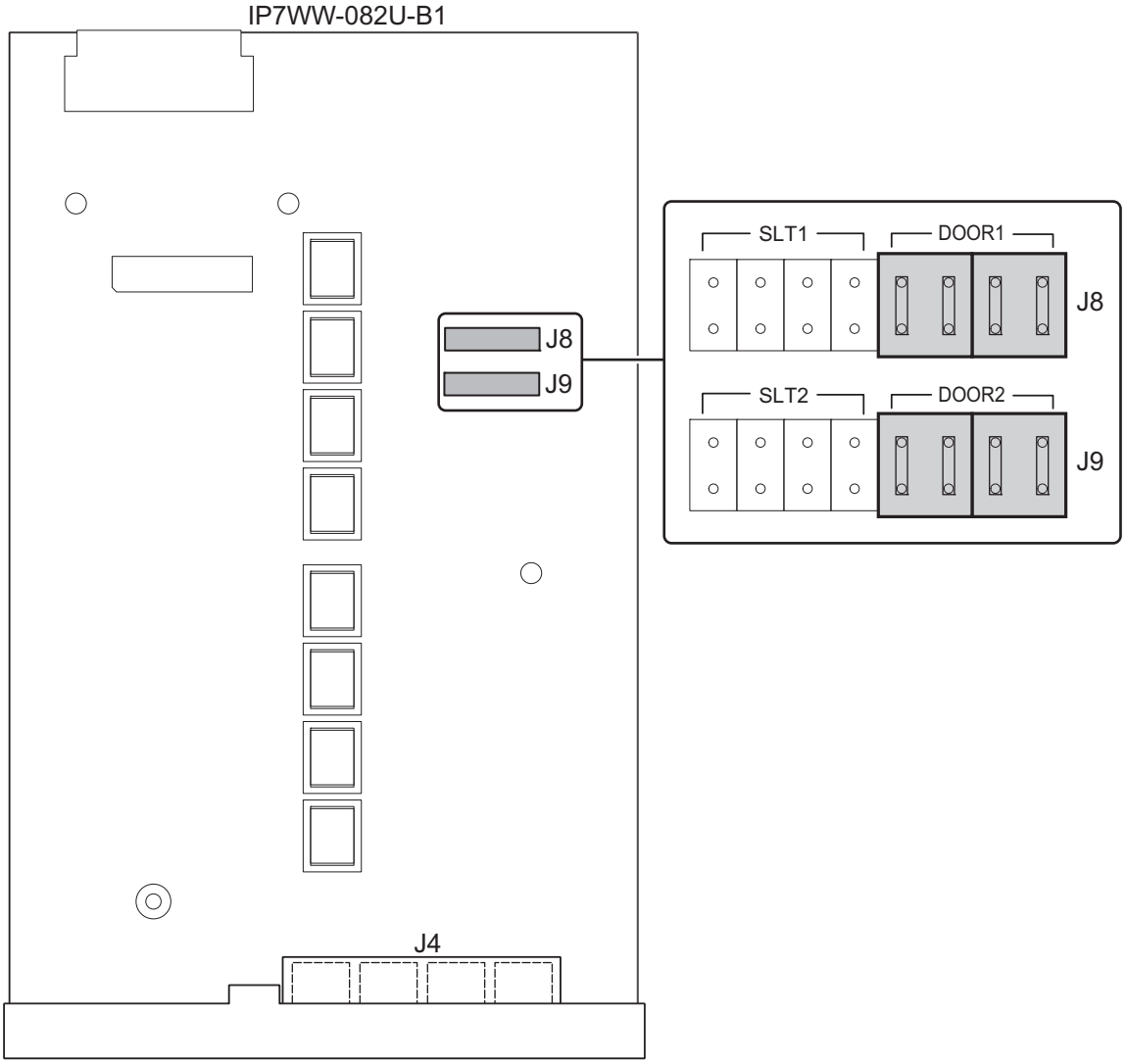

Figure 2-116 Switches Location of 082U-B1

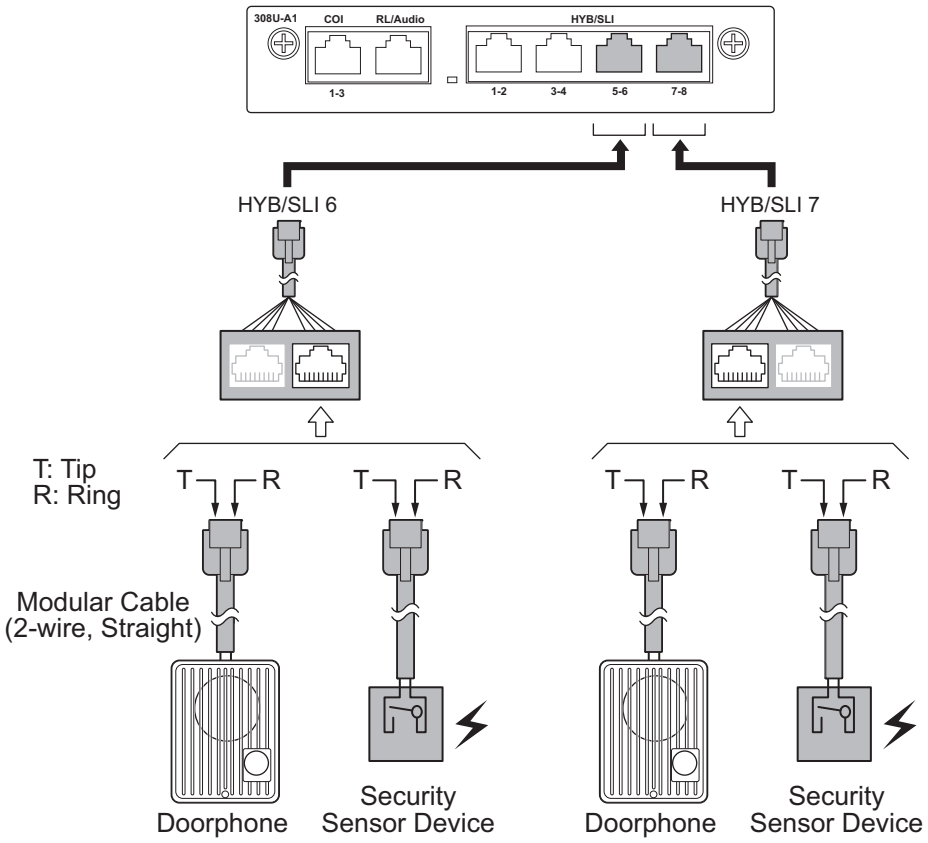

Figure 2-117 Connecting the Doorphone (308U-A1)

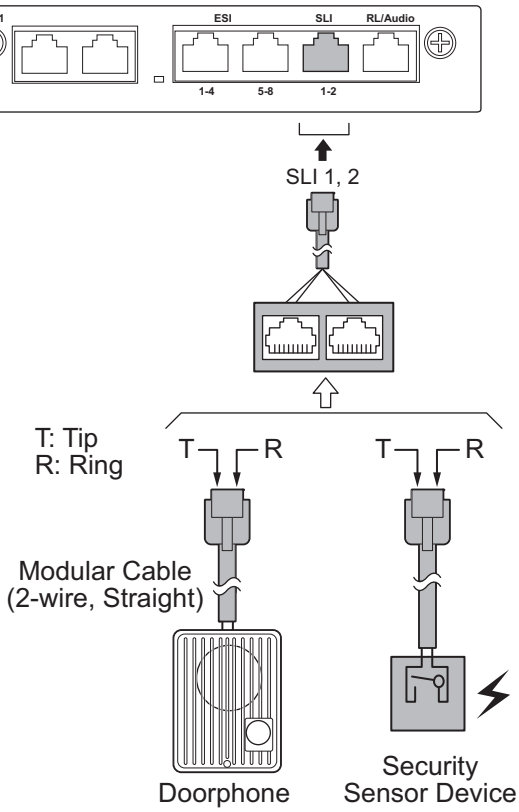

Figure 2-118 Connecting the Doorphone (082U-B1)

5.5.3 Connectors

The following table shows the pin-outs for the RJ-61 cable connector for Doorphone and External Sensor device connections.

Table 2-31 RJ-61Doorphone/Sensor Pin-Outs (308U: HYB/SLI 6)

	Pin No.	Connection
HYB/SLI 5-6 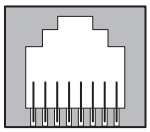 87654321	1	
	2	
	3	Door1/Sensor1(Tip)
	4	
	5	
	6	Door1/Sensor1(Ring)
	7	
	8	

Table 2-32 RJ-61Doorphone/Sensor Pin-Outs (308U: HYB/SLI 7)

	Pin No.	Connection
HYB/SLI 7-8 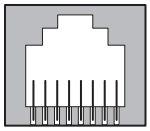 87654321	1	
	2	
	3	
	4	Door2/Sensor2(Ring)
	5	Door2/Sensor2(Tip)
	6	
	7	
	8	

Table 2-33 RJ-61Doorphone/Sensor Pin-Outs (082U: SLI: 1-2)

	Pin No.	Connection
SLI 1-2 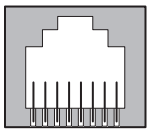 87654321	1	
	2	
	3	Door2/Sensor2(Tip)
	4	Door1/Sensor1(Ring)
	5	Door1/Sensor1(Tip)
	6	Door2/Sensor2(Ring)
	7	
	8	

The Doorphone/Security Sensor configuration is assigned using system programming and switch setting of 308U/082U.

The 3rd party Doorphone Boxes cannot be connected to the port.

5.5.4 Doorphone/Security Sensor Device Interface Specifications

Table 2-34 Doorphone Interface Specifications

Item	Specification
Output Impedance	600 Ω
Output Level	Nominal 500 mV (-10 dBm)
Maximum Output	1.75 V RMS

Applied Voltage during Sensor Off	Loop Current during Sensor On	Port Assignment
25 V	40 mA	Program 10-03-05:1 (Read only) * Port assignment should be set on Doorphone mode by Hardware-Switch on board.

5.6 Installing the Door Unlock Devices

A maximum of two door unlock devices can be connected to each Chassis.

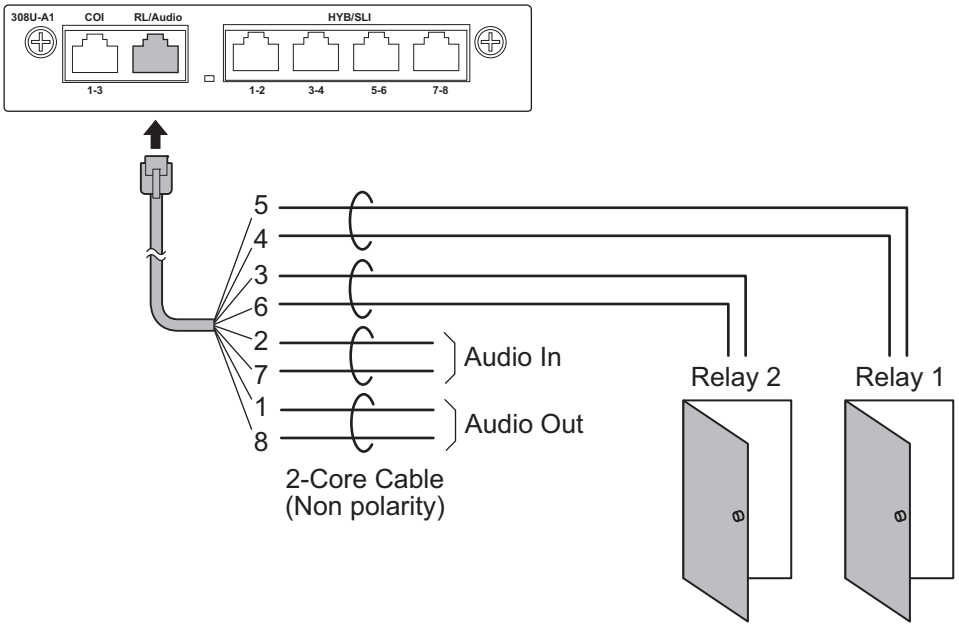

Figure 2-119 Connecting the Door Unlock Device (308U-A1)

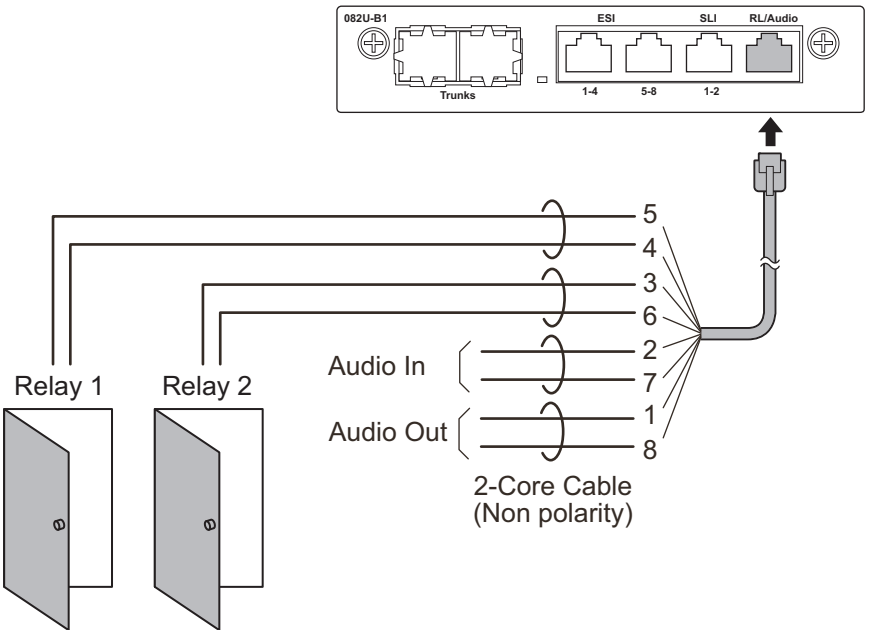

Figure 2-120 Connecting the Door Unlock Device (082U-B1)

The following table shows the pin-outs for the RJ-61 cable connector.

Table 2-35 RJ-61 Relay/Audio Pin-Outs (308U-A1: J5/082U-B1: J4)

	Pin No.	Connection
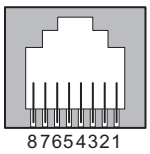 87654321	1	Audio Out
	2	Audio In
	3	Relay 2
	4	Relay 1
	5	Relay 1
	6	Relay 2
	7	Audio In
	8	Audio Out

Table 2-36 General Purpose/Door Unlock Relay Specifications

Item	Specification
Rated Voltage	DC 48 V Maximum
Rated Current	DC 320 mA Maximum
Contact	Normally Open

5.7 Installing the External Paging Speaker/External MOH/BGM Sources

5.7.1 Connecting the Audio Equipment

- *The audio In/Out port labeled "RL/Audio" on 308U-A1 or 082U-B1 can be used for audio port (External paging, External MOH, BGM)*
- *Audio port configuration is assigned using system programming.*

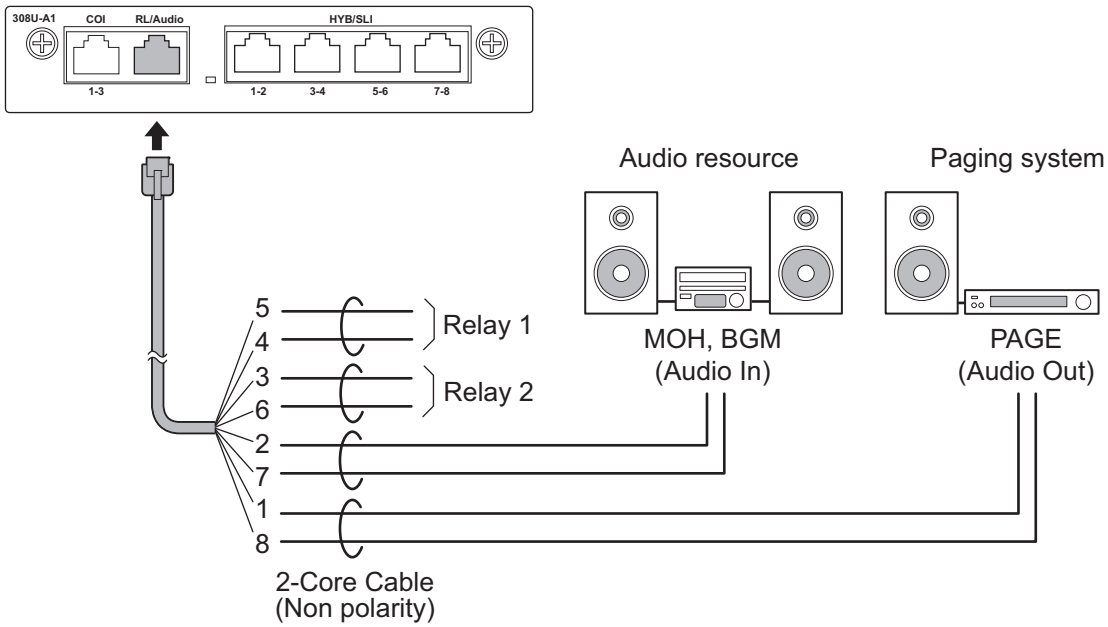

Figure 2-121 Connecting Audio Equipment (308U-A1)

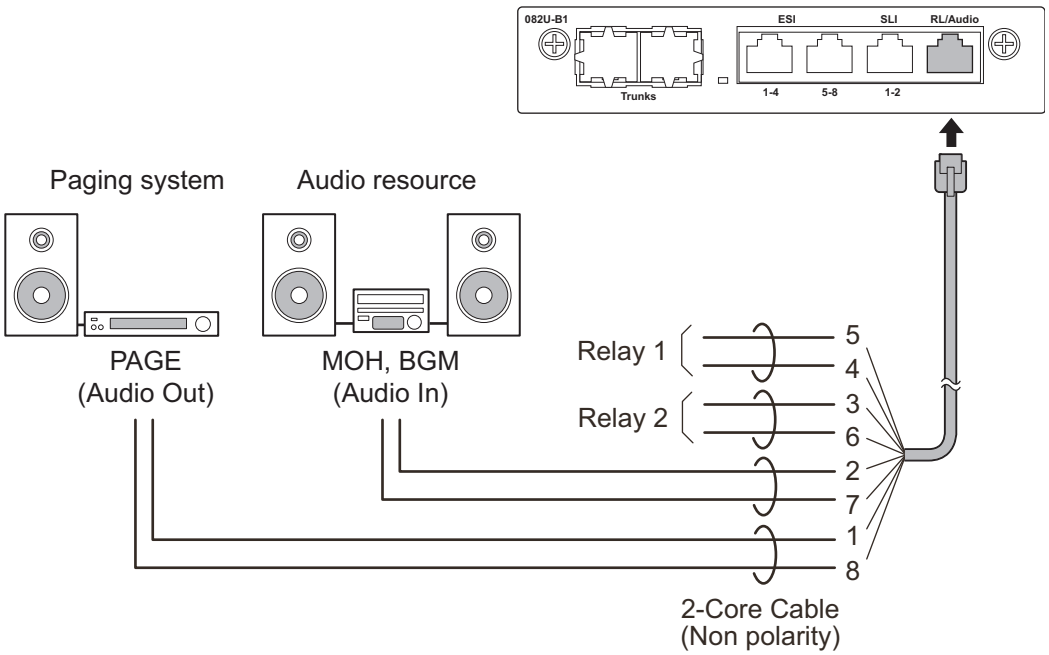

Figure 2-122 Connecting Audio Equipment (082U-B1)

The following table shows the pin-outs for the RJ-61 cable connector.

Table 2-37 RJ-61 Relay/Audio Pin-Outs (308U-A1: J5/082U-B1: J4)

	Pin No.	Connection
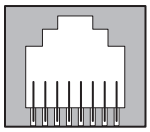	1	Audio Out
	2	Audio In
	3	Relay 2
	4	Relay 1
	5	Relay 1
	6	Relay 2
	7	Audio In
	8	Audio Out

5.7.2 External Paging Output Specifications

Table 2-38 External Paging Output Specifications

Item	Specification
Output Impedance	600 Ω @ 1kHz
Output Level	Nominal 250 mV (-10 dBm)
Maximum Output	400 mV RMS

5.7.3 BGM/External MOH Source Input Specifications

Table 2-39 BGM/External MOH Source Input Specifications

Item	Specification
Input Impedance	High Impedance (>10 kΩ)
Input Level	Nominal 250 mV (-10 dBm)
Maximum Input	1 V RMS

5.8 SMDR (Station Message Detail Recording)

5.8.1 General

SMDR (Station Message Detail Recording) provides a record of the system's outside calls. Typically, the record outputs to a customer-provided SMDR device such as PC via LAN port (ETHERNET) on the CPU board.

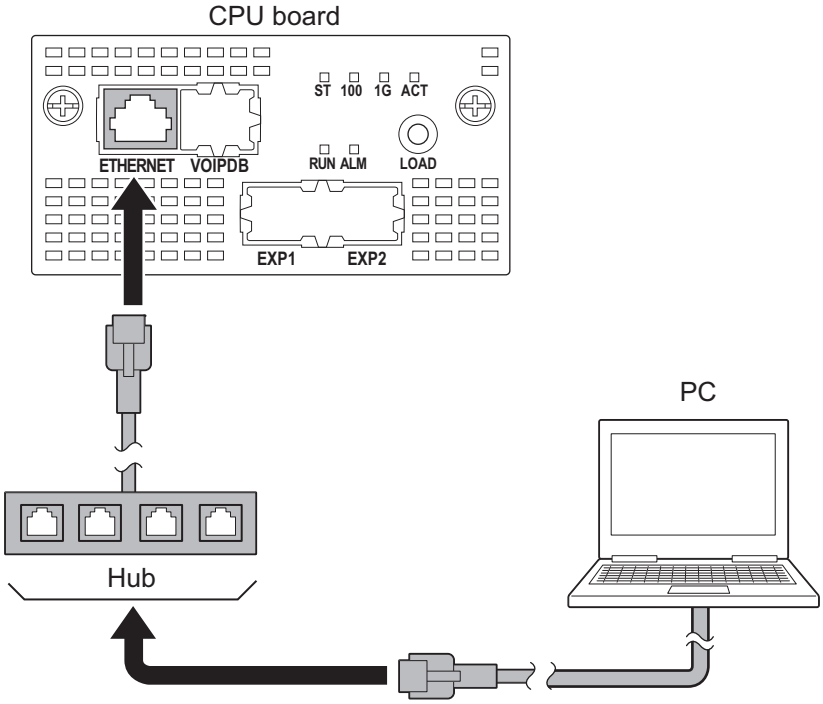

Figure 2-123 Connecting a PC for SMDR

1. Connect the straight type Ethernet cable (CAT5) between the system and In-house LAN.

The SMDR feature is assigned using system programming.

5.9 Wireless Headset Adapter (WHA)

5.9.1 Operation

Refer to the *Plantronics User Guide* for additional details.

5.9.2 General Notes

- The WHA is compatible with all 2W Digital Multiline Terminal: - 12/24TXH-B1 Digital Telephones (BE116515/BE116516)
- A “HEADSET” key does not need to be programmed on the SL2100 Telephone.
- Installation of the WHA must be done by your NEC dealer.

5.9.2.1 Installing the Wireless Headset Adapter

Installation notes:

Refer to the *Plantronics User Guide* for additional details.

- Installation of the WHA must be done by your NEC dealer.
- Disconnect the telephone line cord from its wall jack.
- Plug the cord from the cordless headset base unit into the IP7WW-12/24TXH-B1 TEL headset socket.
- Plug the AC Adapter cord into the cordless headset base unit.
- Refer to the cordless headset user guide and adjust the audio controls on the cordless headset base unit to match the IP7WW-12/24TXH-B1 Telephone.

Removing the Auxiliary Connector Rubber Cover

The Wireless Headset Adapter plugs into the Auxiliary Connector on the bottom of your telephone. When your telephone comes from the factory, the Auxiliary Connector is protected by a rubber cover. You must remove this cover before installing the adapter.

To remove the Auxiliary Connector Rubber Cover:

1. Turn your telephone over and place it on a smooth, soft surface.
2. Remove a rubber cover.

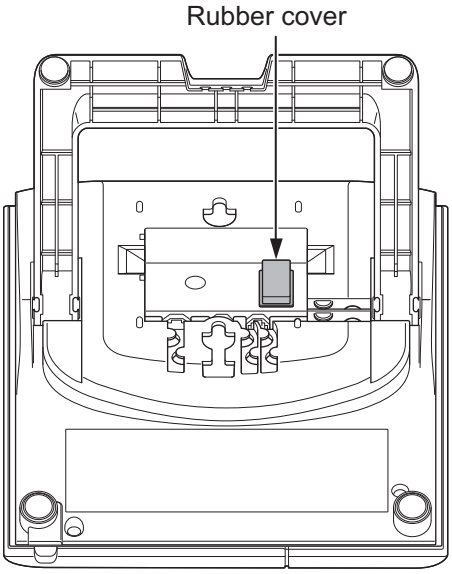

Installing the Headset Adapter

To install the Headset Adapter:

1. Turn your telephone over and place it on a smooth, soft surface.
2. Line up the connector in the Headset Adapter with the Auxiliary Connector on the telephone.
3. Carefully snap the Wireless Headset Adapter into the telephone base.

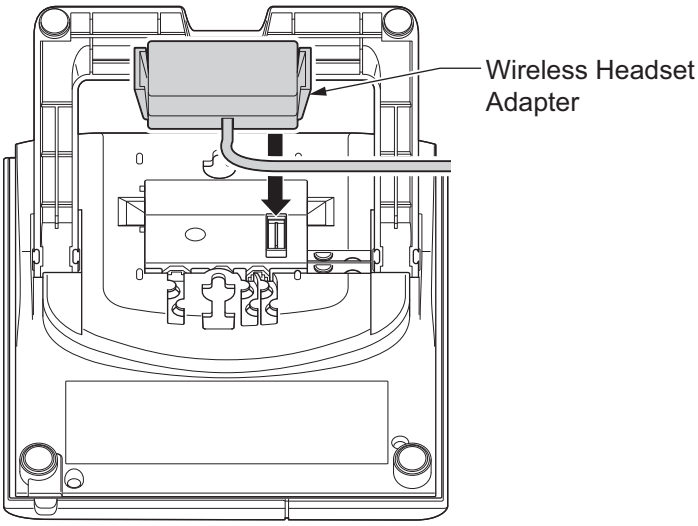

Connecting to the Headset System Base

To connect your telephone to the Headset System Base:

1. Plug the cord into the telephone's headset socket and the socket on the Headset System base. Insert the Headset Adapter plug into the lifter jack on the Headset System base.

Please see the Plantronics User Guide for connecting between the Terminal and Device.

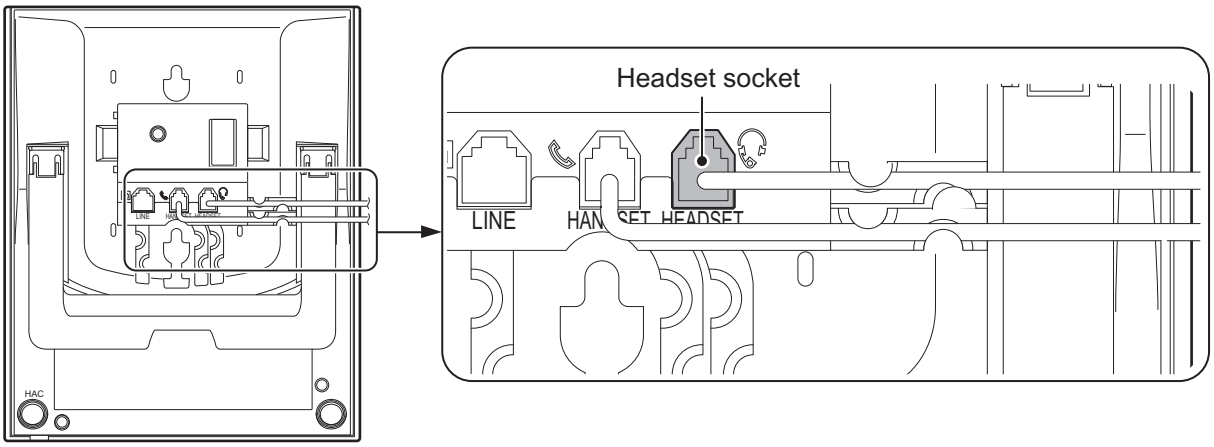

< Bottom view>

Figure 2-124 Headset Socket (Digital Multiline Telephone)

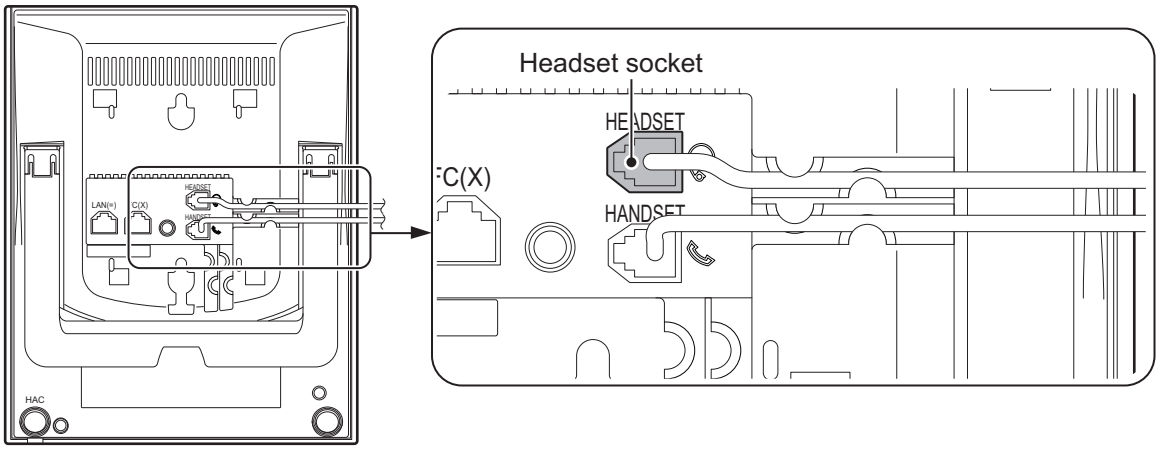

< Bottom view>

Figure 2-125 Headset Socket (IP Multiline Telephone)

2. Plug the extension's line cord into the socket on the bottom of the telephone.

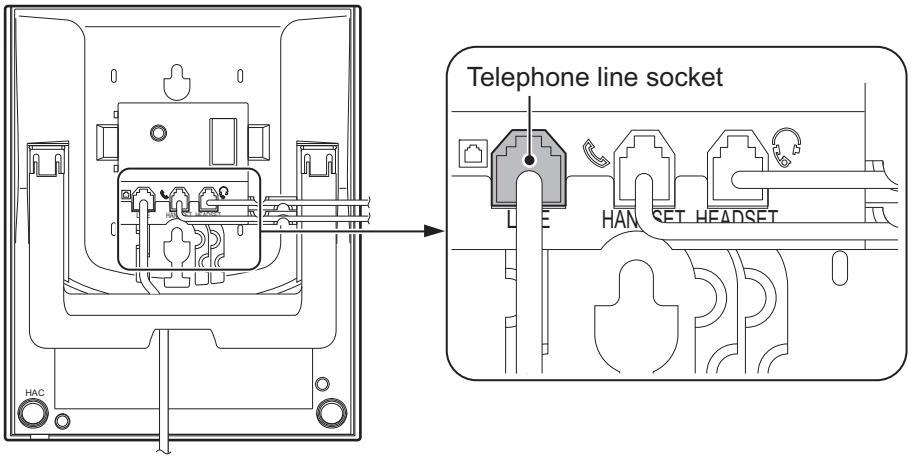

< Bottom view>

Figure 2-126 Telephone Line Socket (Digital Multiline Telephone)

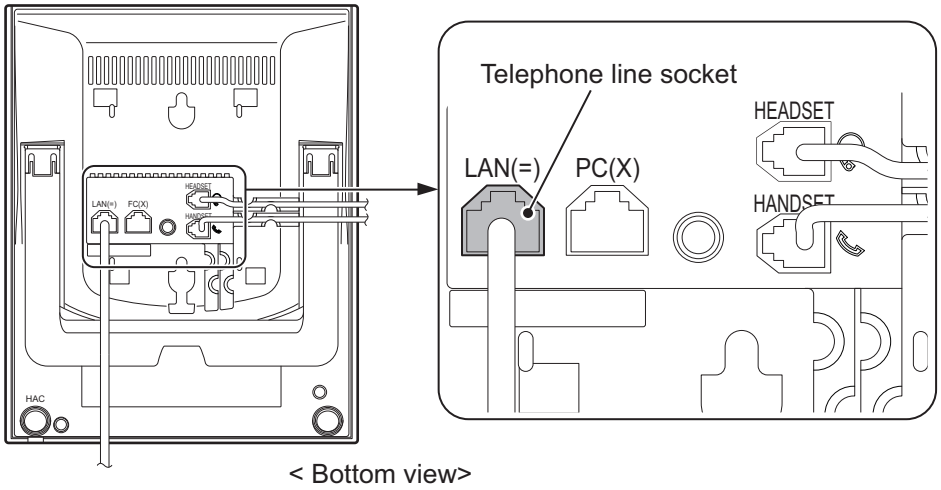

< Bottom view>

Figure 2-127 Telephone Line Socket (IP Multiline Telephone)

5.9.3 Recommended Model

NEC recommends the following Plantronics cordless headsets for SL2100 applications:

- Savi W700 Series Bluetooth technology (W710 / W720 / W730 / W740 / W745)
- CS500 Series DECT 6.0 technology (CS510 / CS520 / CS540)
- CS50 900MHz Technology
- CS55 DECT 6.0 technology
- CS70N DECT 6.0 technology
- CS351N DECT 6.0 technology
- CS361N DECT 6.0 technology
- Voyager 510 Bluetooth technology

Some of the above models are sold with and without the Plantronics Handset Lifter.

Refer to www.plantronics.com for details.

The SL2100 Telephone must be equipped with the NEC WHA (Wireless Headset Adapter – P/N BE113158).

5.10 Installing the DT430/IP4WW-12/24TXH-[ ] Multiline Terminals and options

5.10.1 Connecting the DT430/IP4WW-12/24TXH-[ ] Multiline Terminals and options to the SL2100 system

Refer to SV9100 System Hardware Manual for installing DT430 Multiline Terminals.

Refer to SL1000/SL1100 System Hardware Manual for installing the IP4WW-12/24TXH-[ ] Multiline Terminals.

5.10.2 Special Notes

- The DT430/IP4WW-12/24TXH-[ ] Multiline Terminal can be connected according to the following terminal power factor. Do not connect more than this value.
- The Illuminance sensor does not function when the IP4WW-12/24TXH-B Terminal connected to the SL2100 system.
- Due to Illuminance sensor does not function, the Automatic brightness control of LCD backlit cannot be controlled when the IP4WW-12/24TXH-B Terminal connected to the SL2100 system.

Table 2-40 Terminal Power Factor

Terminal Power Factor	
1 Chassis = < 38	
Item	**Power Factor**
IP7WW-12/24TXH-[ ]1 TEL	1
IP7WW-60D DSS-[ ]1	1
Single Line Telephone	1
IP4WW-12/24TXH-[ ] TEL	1
DTZ-12D-3[ ] TEL	2
DTZ-24D-3[ ]TEL	2
DCZ-60-2[ ] ( ) Console	2
BCA-Z[ ]	1

Table 2-41 Maximum Number of Terminal installed

Terminal (Power Factor)	Maximum Number of Terminal installed			Remarks
	1 Chassis	2 Chassis	3 Chassis	
IP7WW-12/24TXH-[ ]1 (1)	24	48	72	
IP7WW-60D DSS-A1 (1)	3	6	9	
IP7WW-60D DSS-B1 (1)	12			
Single Line Telephone (1)	32	64	96	
IP4WW-12/24TXH-[ ]TEL (1)	24	48	72	
DTZ-12D-3[ ] TEL (2)	19	38	57	
DTZ-24D-3[ ] TEL (2)	19	38	57	
DCZ-60-2[ ] ( ) Console (2)	1	2	3	
DTZ Terminal + BCA-Z[ ] (3)	12	24	36	

System Start Up

SECTION 1 SYSTEM START UP

1.1 Before Starting Up the System

Before starting up the system, make sure:

- Chassis are installed correctly.
- All extensions are cabled correctly.
- All earth ground and PSTN Trunks are cabled correctly.
- All boards are configured, equipped, and secured correctly.
- AC power cord is cabled correctly.
- At least one display type Multiline Telephone is connected to the system. (for Programming)
- If Expansion Chassis are installed, turn the power on/off in the order of Expansion 2 Chassis, Expansion 1 Chassis and then Main Chassis.

1.2 Starting Up the System

There are two methods for startup (COLD Start and HOT Start).

Table 3-1 Start Up Method

Start Up Method	Description	Purpose
COLD Start	The factory setting data is loaded.	• First time start up • System Initialization
HOT Start	The customer setting data is loaded.	• System Reboot

1.2.1 Perform a Cold Start

This section describes the process for starting the system for the first time or starting a system that requires the customer data be deleted.

System software is loaded from flash memory, and the customer data is deleted from RAM memory.

If Expansion Chassis are installed, turn the power on/off in the order of Expansion 2 Chassis, Expansion 1 Chassis and then Main Chassis.

To perform a Cold Start;

1. Set the power switch to off position.

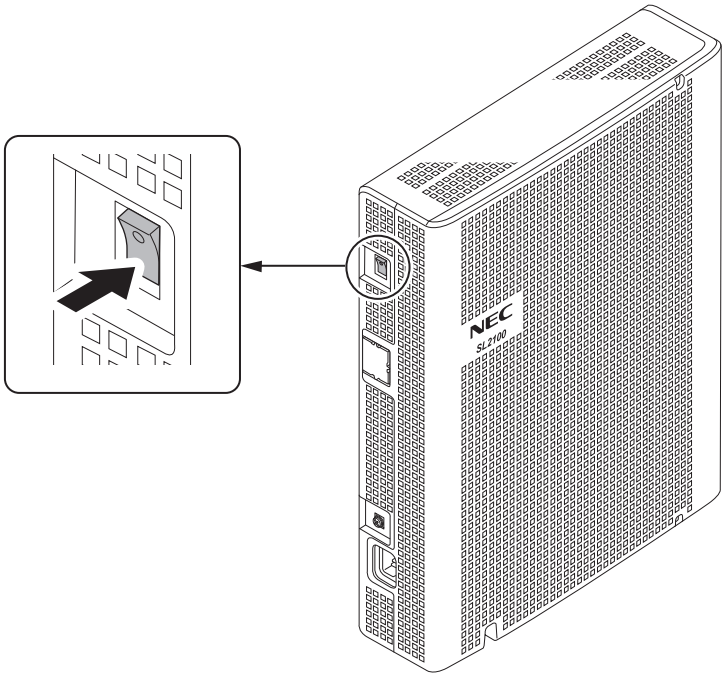

Figure 3-1 Power Switch Location

2. Once the system has powered off, push in and hold the **LOAD** button on the CPU board.

If Expansion Chassis are installed, the Power Switch must be ON at Expansion Chassis.

3. Turn the power switch ON at the Main Chassis.
4. Continue holding the **LOAD** button for approximately three seconds or until ALM LED lights (red).

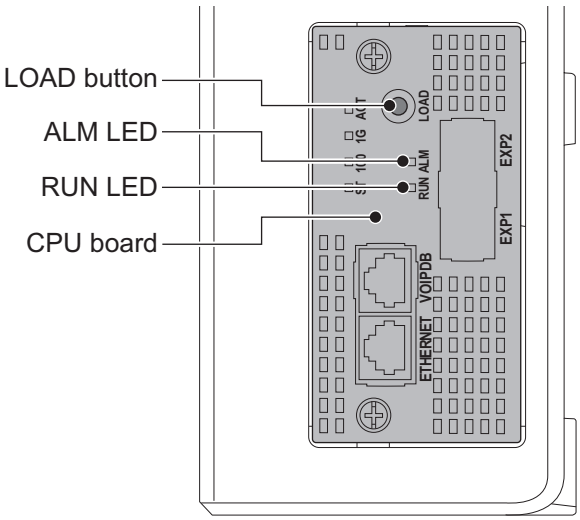

Figure 3-2 ALM LED and RUN LED Location

5. Release the **LOAD** button.

6. When the system has completed reloading the software (about one minute), the RUN LED is flashing green on the CPU board and the connected Multiline Telephone's display will show the Time & Date and Extension Number.

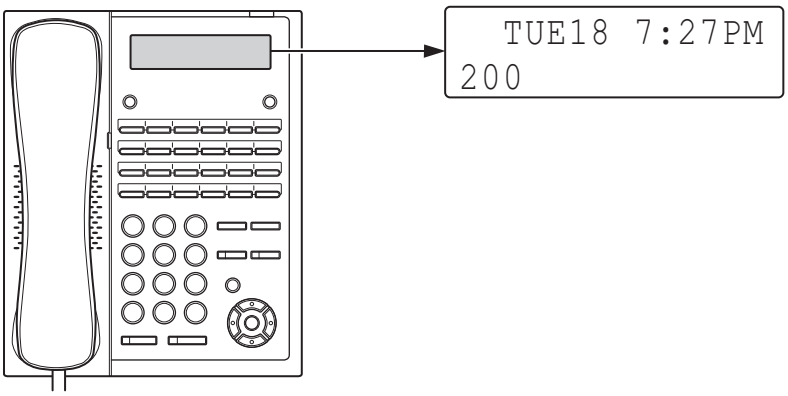

Figure 3-3 Display Indication (Idle) (12TXH/24TXH-A1)

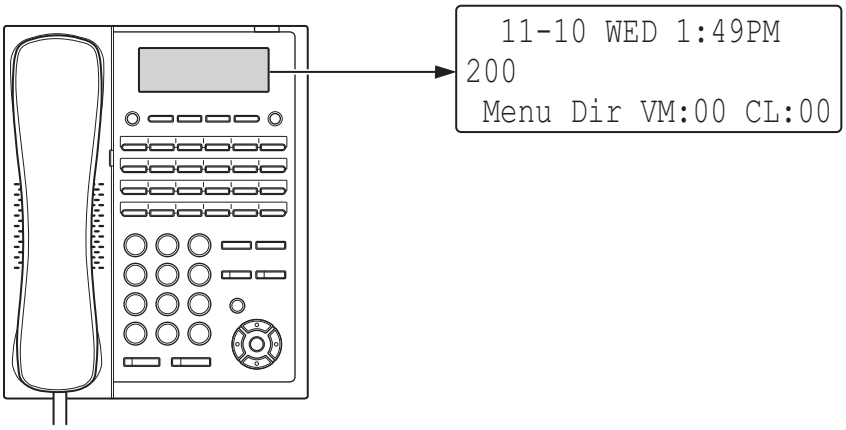

Figure 3-4 Display Indication (Idle) (12TXH/24TXH-B1)

1.2.2 Perform a Hot Start

This section describes how to load system software from flash memory, and the customer data from RAM memory.

System Software and customer data are loaded from flash memory.

If Expansion Chassis are installed, turn the power on/off in the order of Expansion 2 Chassis, Expansion 1 Chassis and then Main Chassis.

To perform a Hot Start;

1. Turn the system power off.
2. After it has powered off, turn the power switch back to ON. Wait approximately one minute.
3. When the system has completed reloading the software, the RUN LED is flashing green on the CPU board, and the connected Multiline Telephone's display will show the Time & Date and Extension Number as Figure 3-4 Display Indication (Idle) on page 3-3.

SECTION 2 PROGRAMMING MODE

2.1 Entering the Programming Mode

The installer/system administrator can enter to the system programming mode from the Display Type Multiline Telephone. (A maximum of two users can enter mode at the same time)

In a newly installed system, use extension port 1.

1. Press **Speaker** key. (Do not lift the handset)
2. Dial # ∗ # ∗.

Figure 3-5 Entering Programming Mode Display 1 (12TXH/24TXH-A1)

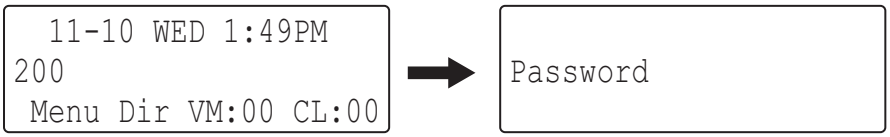

Figure 3-6 Entering Programming Mode Display 1 (12TXH/24TXH-B1)

3. Dial the system password, then press **Hold** key to enter the Program Mode.

Figure 3-7 Entering Programming Mode Display 2 (12TXH/24TXH-A1)

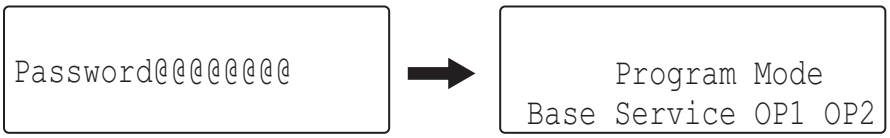

Figure 3-8 Entering Programming Mode Display 2 (12TXH/24TXH-B1)

For the details of programming, refer to the SL2100 Programming Manual. (separate issue)

2.2 Exiting the Programming Mode

1. Press **Mute** key several times to return to the "Program Mode" Screen.

```
1001-    Sys Con
Time&Data Setup
```

→

```
 Program Mode
```

Figure 3-9 Exiting the Programming Mode Display 1 (12TXH/24TXH-A1)

```
10-01-      Sys Config
Time&Date Setup    |01
 back   ↑      ↓ Select
```

→

```
      Program Mode
 Base Service OP1 OP2
```

Figure 3-10 Exiting the Programming Mode Display 1 (12TXH/24TXH-B1)

2. Press **Speaker** key to exit.

```
 Program Mode
```

→

```
  TUE18 7:27PM
200
```

Figure 3-11 Exiting the Programming Mode Display 1 (12TXH/24TXH-A1)

```
      Program Mode
 Base Service OP1 OP2
```

→

```
  11-10 WED 1:49PM
200
 Menu Dir VM:00 CL:00
```

Figure 3-12 Exiting Programming Mode Display 2 (12TXH/24TXH-B1)

The system automatically saves the customer data to the memory which is backed up by lithium battery.

2.3 Saving (Backup) the Customer Data

When the installer/system administrator exits from the programming mode, the system will automatically save the customer data to the on-board memory which is backed up by lithium battery. Additionally, the customer data can be saved to a SD Card for backup purpose. The **BLANK** SD Card is inserted to the SD slot on the CPU board.

1. Turn the system power off, insert the blank SD Card (1 GB or larger) to the SD slot on the CPU board.

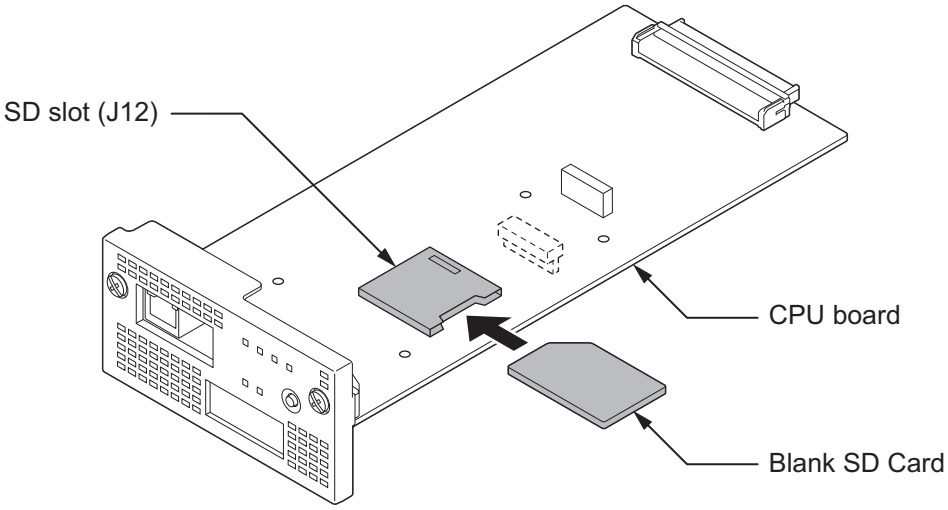

Figure 3-13 Inserting the SD Card

2. Turn the power on, enter the Program Mode then PRG90-03.

Figure 3-14 PRG90-03 Display (12TXH/24TXH-A1)

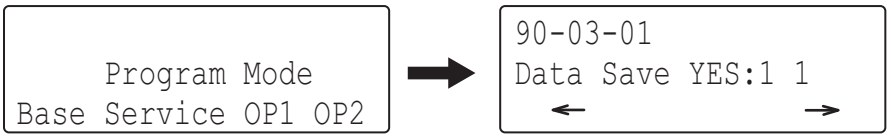

Figure 3-15 PRG90-03 Display (12TXH/24TXH-B1)

3. Dial **1** and press **Hold** key.
4. When the data backup to the SD Card is completed, the display will be changed to the next PRG.

Figure 3-16 PRG90-04 Display (12TXH/24TXH-A1)

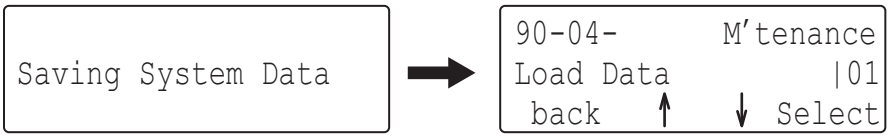

Figure 3-17 PRG90-04 Display (12TXH/24TXH-B1)

5. Remove the SD Card and exit from the Programming Mode.

The saved data on SD Card cannot be edited by the PC.

2.4 Loading the Customer Data

The backed up customer data can be loaded to the system by SD Card.

For the details of the CPU board installation, refer to Installing the CPU board (IP7[ ]-CPU-C1).

1. Turn the power off, insert the Customer Data SD card into the SD Slot on CPU board.

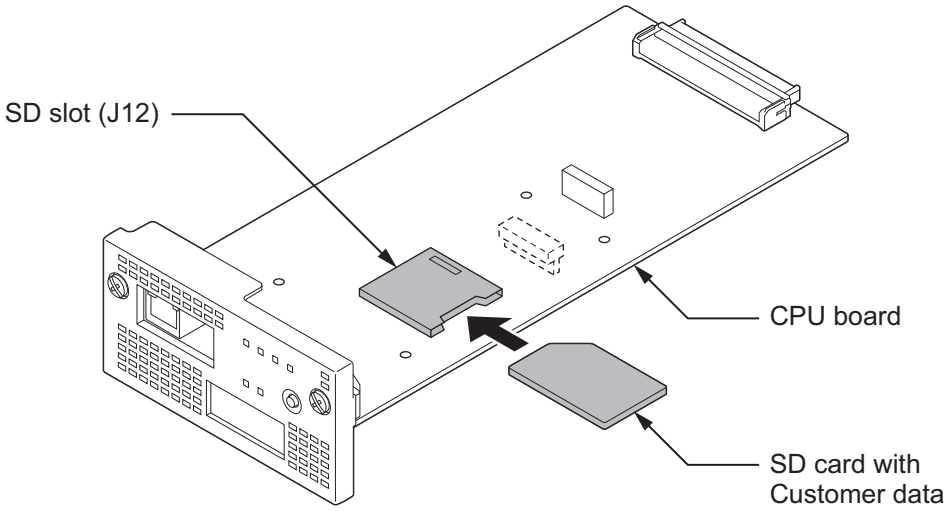

Figure 3-18 Inserting the SD card

2. Turn the power on, enter the Program Mode then PRG90-04.

Figure 3-19 PRG90-04 Display (12TXH/24TXH-A1)

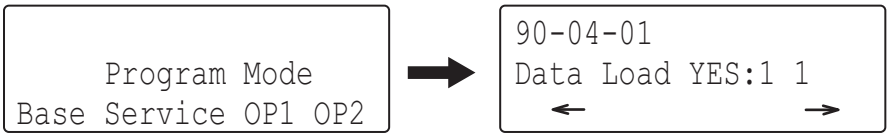

Figure 3-20 PRG90-04 Display (12TXH/24TXH-B1)

3. Dial **1** and press **Hold** key.
4. When the data loading is completed, the display changes to the next PRG.

Figure 3-21 Next PRG Display (12TXH/24TXH-A1)

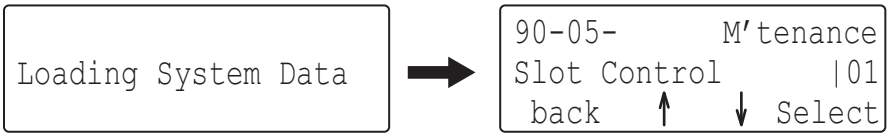

Figure 3-22 Next PRG Display (12TXH/24TXH-B1)

5. Remove the SD card and exit from the Program Mode.

SECTION 3 SYSTEM SHUT DOWN

3.1 Powering Off the System

1. Turn the all Chassis power off using the power switch.

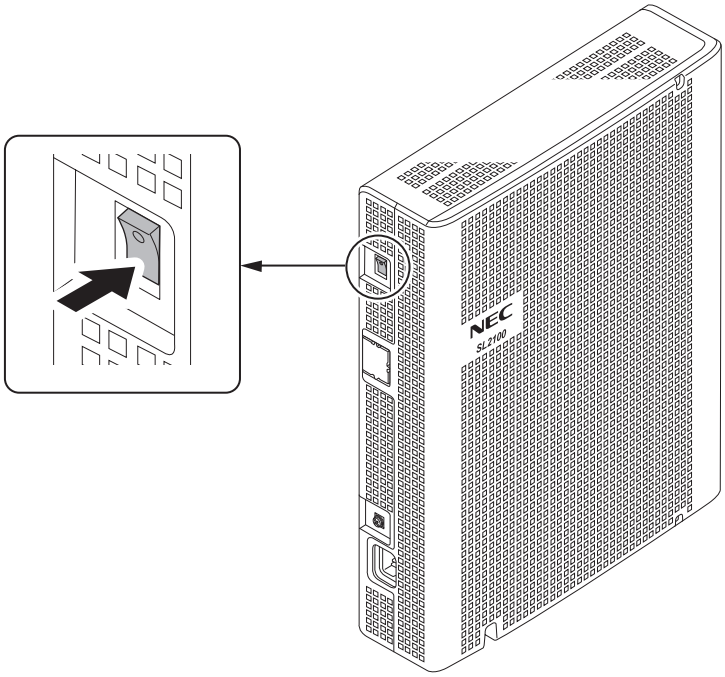

Figure 3-23 Power Switch Location

- ***If Expansion Chassis are installed, turn the power on/off in the order of Expansion 2 Chassis, Expansion 1 Chassis and then Main Chassis.***
- ***DO NOT power off by disconnecting the AC (or DC for battery backup) power. Always use the Power Switch on the Main/Expansion Chassis.***
- ***All calls in progress will be cut off when the system is powered off, or if the Power Failure occurred.***
- ***All user's setting (such as Call Forward, Camp-On, etc) will be kept.***

3.2 Resetting the System

The system reset is carried out using the "Power OFF and ON" operation.

Maintenance

SECTION 1 LITHIUM BATTERY REPLACEMENT

1.1 General

The Lithium Battery (CR2032) is installed on the CPU-C1 board in Main Chassis. It provides the battery-backup of the RAM memory for approximately 36 months. When the battery power becomes low, the system will display a "Warning Message" to the assigned Display Multiline Telephone as below.

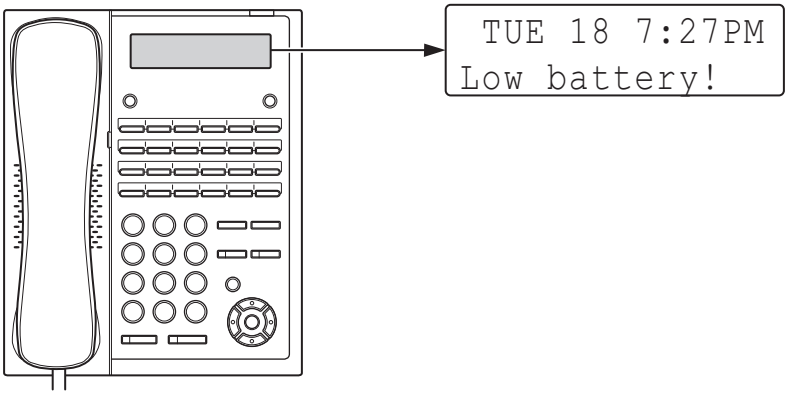

Figure 4-1 Warning of Low Battery (12TXH/24TXH-A1)

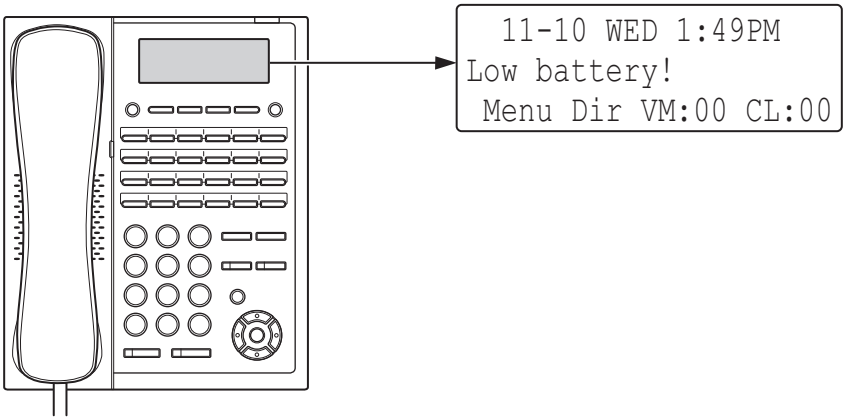

Figure 4-2 Warning of Low Battery (12TXH/24TXH-B1)

1.2 Lithium Battery Specification

Before replacing the Lithium battery, make sure which type of Lithium battery is required and prepare the new Lithium battery. (CR2032)

NEC recommends that a backup of the customer data is performed before powering off the system (either PCPro file or SD card backup) in order to replace the backup battery.

- ***Risk of explosion if the battery is replaced by an incorrect type.***
- ***Dispose of used batteries as instructed by the manufacturer of the battery.***
- ***If Expansion Chassis are installed, turn the power on/off in the order of Expansion 2 Chassis, Expansion 1 Chassis and then Main Chassis.***

1.3 Replacing the Lithium Battery

Not all boards are hot swappable. Do not remove or install from the chassis when powering up.

1. Power off the system.
2. After the system powers down, loosen two screws and pull out the CPU board.

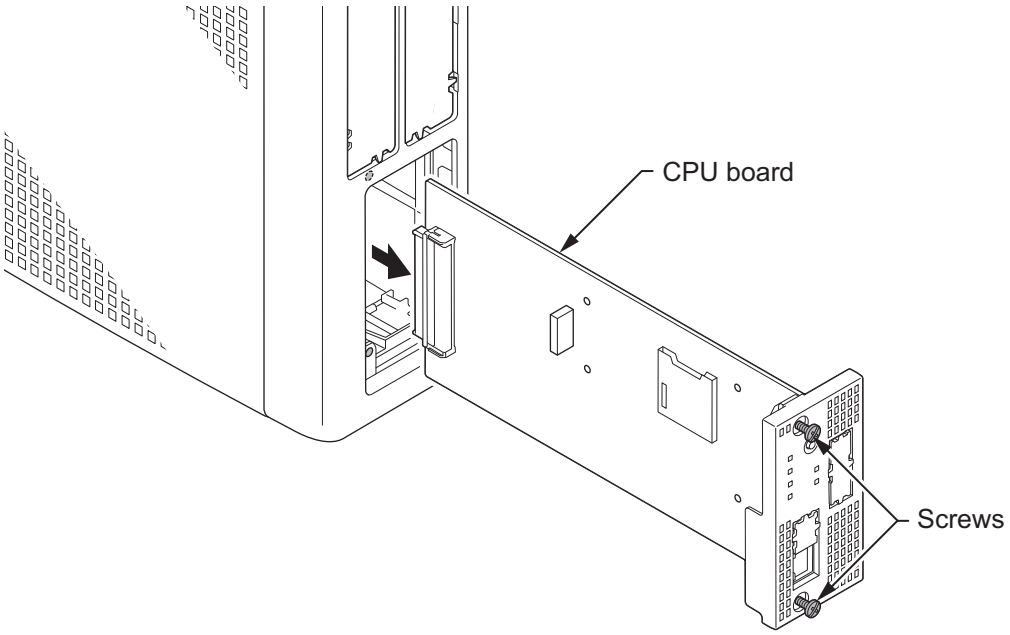

Figure 4-3 Removing the CPU Board

3. Refer to following figure for the Lithium battery location on the CPU board.

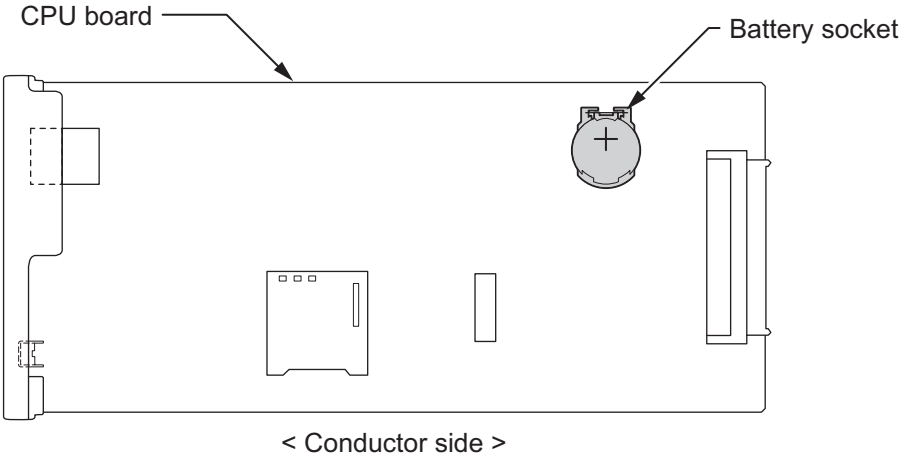

Figure 4-4 Location of Lithium Battery Socket

4. Remove the old Lithium battery and insert the new one into the socket.

The polarity "+" symbol must be on top as illustrated in following figure.

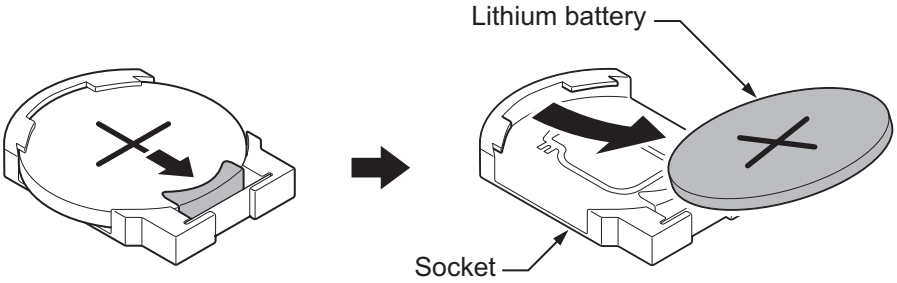

Figure 4-5 Removing the Lithium Battery

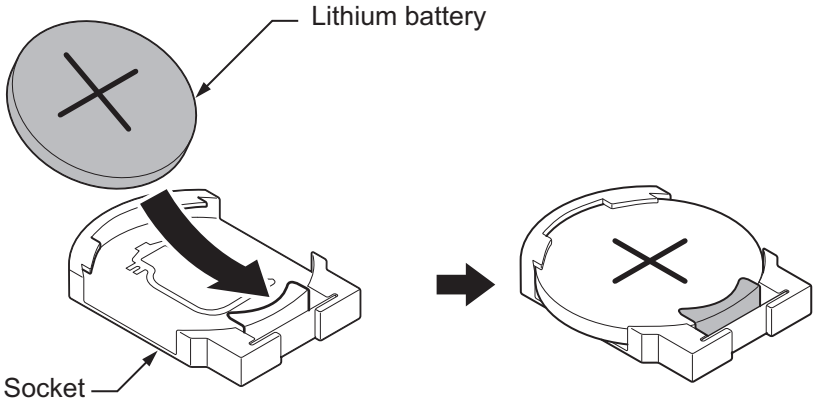

Figure 4-6 Inserting the Lithium Battery

5. Insert the CPU board in the guide rail of chassis and push it securely into position, and tighten the two screws.

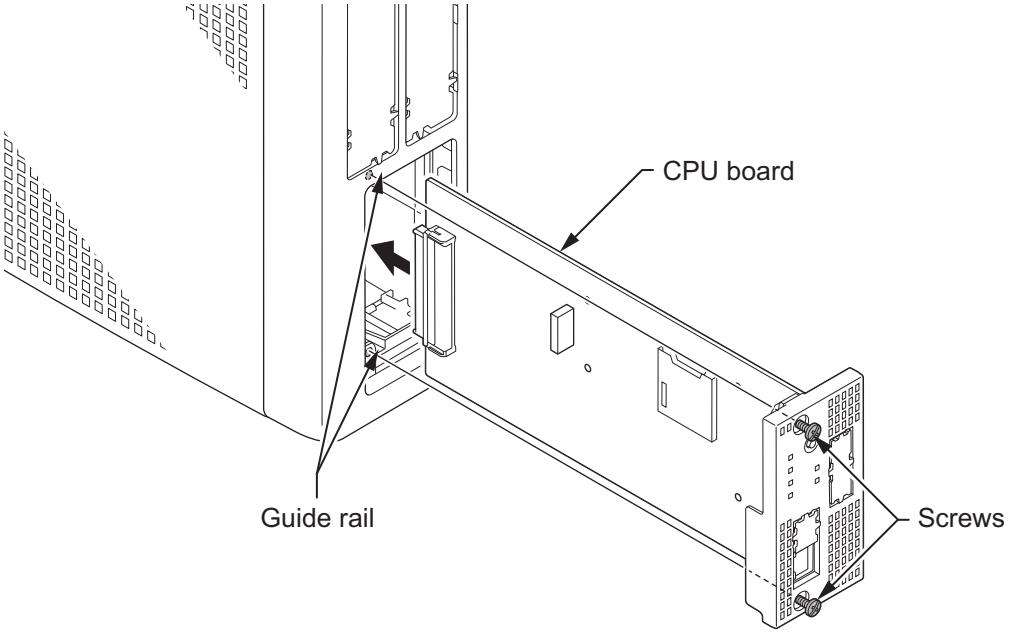

Figure 4-7 Installing the CPU Board

SECTION 2 MAIN SOFTWARE UPGRADING

2.1 General

The main system software is initially stored in the Flash memory located on the CPU-C1 board of the Main Chassis. It can be upgraded by the new software on the SD card.

2.2 Before Upgrading the Main Software

NEC recommends that a backup of the customer data is performed before upgrading the main software (either PCPro file or SD card backup).

Before upgrading the main system software, the following preparations are necessary.

- Prepare the SD Card (1 GB, or upwards and formatting by FAT), and store the new main software on the SD card by PC. (New main system software is supplied by NEC.)

The Formatting of the SD card will be used SD Formatter. It is supplied by SD Association.

2.3 Main Software Version Confirmation

The main system software version is confirmed by the following operation at the display type Multiline Telephone.

The following steps assume that program 15-02-60 is set to Advanced 1 or Advanced 2. If set to Standard the operation is as follows:

1. *On-hook Condition.*
2. *Press Enter Key (Navigation Key).*
3. *Press "3" On Keypad to show the Main System Software version and Hardware Key Code.*

1. On-hook Condition.

```
  TUE18 7:27PM
200
```

Figure 4-8 Display of Multiline Telephone (12TXH/24TXH-A1)

```
  11-10 WED 1:49PM
200
 Menu Dir VM:00 CL:00
```

Figure 4-9 Display of Multiline Telephone (12TXH/24TXH-B1)

2. Press Enter Key (Navigation Key).

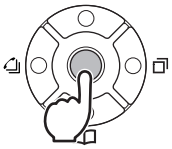

```
100:OPRN LST 1/6
 >Call History:00
```

(12TXH/24TXH-A1)

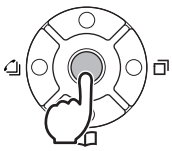

```
100:Operation List  1/8
>Call History: 00
 Contacts
```

(12TXH/24TXH-B1)

3. Dial **820**.

```
820:Property 2/4
>System
```

(12TXH/24TXH-A1)

```
820:Properties      2/2
>System
 Phone
```

(12TXH/24TXH-B1)

4. Press Right Key (12TXH/24TXH-A1 only) or Enter Key (**Navigation** Key) to show the main system software version and Hardware Key Code.

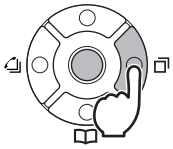

```
Main V   X.XX.XX
C025-XXXX-XXXX
```

(12TXH/24TXH-A1)

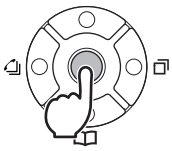

```
VERSION:       XX.XX.XX
MAC:  00-60-B9-D8-DF-8E
HKEY:    3810-0000-0000
```

(12TXH/24TXH-B1)

5. Off-Hook and return to Time & Date mode.

```
  TUE18 7:27PM
200
```

(12TXH/24TXH-A1)

```
  11-10 WED 1:49PM
200
 Menu Dir VM:00 CL:00
```

(12TXH/24TXH-B1)

2.4 Upgrading the Main Software

SL2100 system provides the Main Software upgrade for easy maintenance.

- Using SD Card on page 4-7
- Using Web Programming on page 4-9

2.4.1 Using SD Card

Not all boards are hot swappable. Do not remove or install from the chassis when powering up.

1. Power off the system.
2. After the system powers down, remove the CPU-C1 board from Main Chassis.
3. Insert the SD card (with the new main system software loaded) to the SD card slot on CPU-C1 board. (If the other SD cards (such as SDVMS or SDVML) are already fitted, remove the card.)

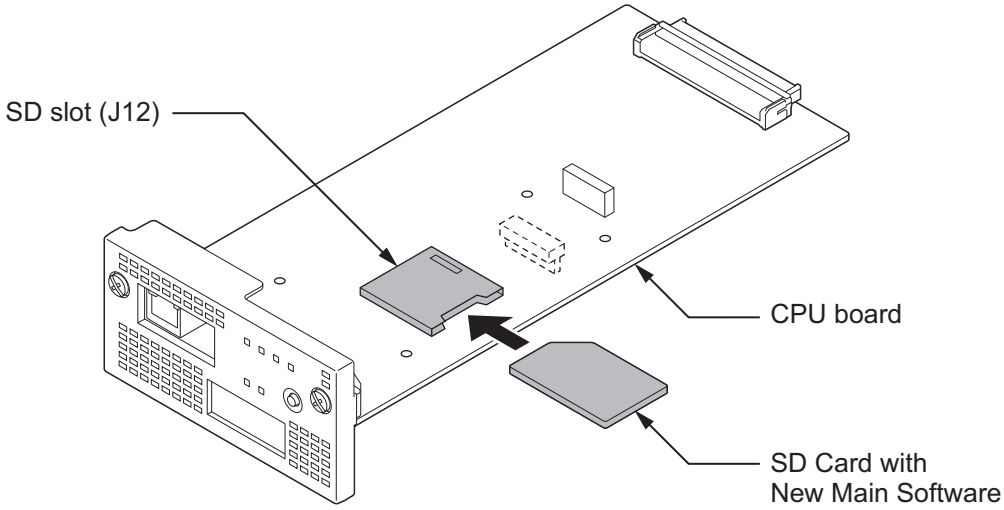

Figure 4-10 Insert the SD card

4. Insert the CPU-C1 board.

5. Push in and hold the **LOAD** button on the CPU-C1.

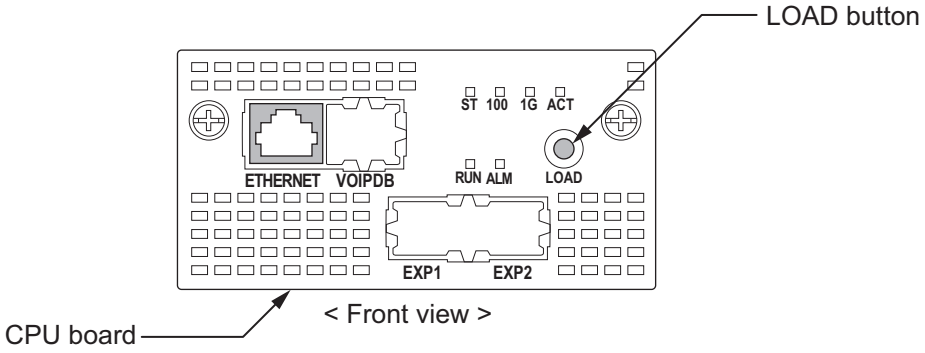

Figure 4-11 Push in and hold the LOAD button

6. Turn the system power on.
7. Continue holding the **LOAD** button for approximately 10 seconds or until RUN LED lights.
8. Release the **LOAD** button.
9. Wait until the RUN LED (green) and ALM LED (red) starts flashing (1s on/1s off) on the CPU-C1 board has the following indications (approximately seven minutes).

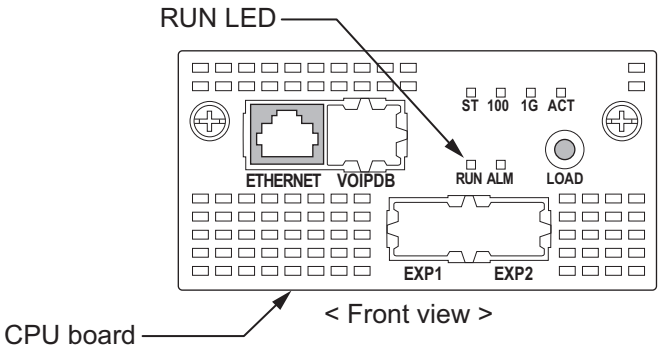

Figure 4-12 Status LED

10. Turn the power off (wait about 10 seconds) and remove the CPU-C1 board from Main Chassis and SD card from the SD slot on the CPU-C1.

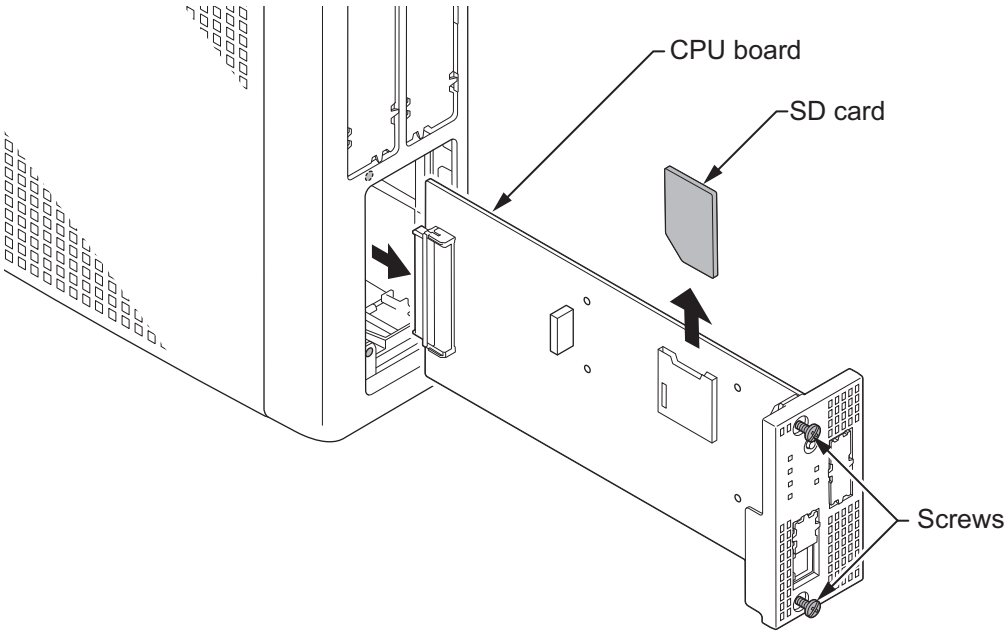

Figure 4-13 Remove the SD card

11. Replace the CPU-C1 board. (If the system required the SDVM[ ] SD card, replace it to the CPU-C1)
12. Turn the system power back on.
13. When the system has completed reloading the software, the RUN LED will flash green. (1s on/1s off)

- *To confirm the new software version number, press the Navigation key on any display telephone to view the system version number see* *Main Software Version Confirmation on page 4-5*.
- *The existing system data in the flash memory is replaced, but the customer data (stored in the RAM) is saved.*

2.4.2 Using Web Programming

The Firmware can be updated in a system remotely at a scheduled time or immediately from the PC. This feature saves times and effort in comparison to performing the task manually. A Firmware Update can update when the WebPro or PCPro is connected to a chassis. This section explains the manual firmware update (Upload from PC/Immediately Reset) using the WebPro.

2.4.2.1 Preparation

- Firmware package file (xxxxxx.bin) from NEC.
- Download the Upgraded firmware (xxxxxx.bin) and save it to the USB drive or PCs hard disc drive.
- User Level (PRG90-02-03) has to be 2 = IN (Installer Level).
- The following browsers are supported for the WebPro:
  - Internet Explorer 11 or higher
  - Chrome 52 or higher
  - Firefox 42 or higher

1. Connect the PC to the Ethernet port on the CPU-C1 using a LAN cable.

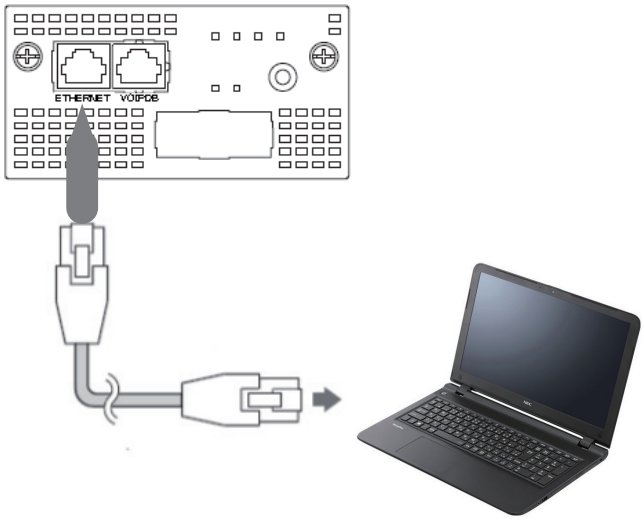

Figure 4-14 Preparation of Web Programming

Before you start the Web Programming, set the following settings;
- *Set your PC's IP address for the system.*
- *Enable JavaScript in your browser by accessing your browser settings.*

2.4.2.2 Accessing Firmware Update using Web Programming

1. To log in, launch any support browser and enter the IP address of the SL2100 LAN port.
   IP Address is 192.168.0.10 (by default).
2. WebPro Login Screen is displayed, enter the **User Name** and **Password** (using PRG90-02). Click the **Login** button.

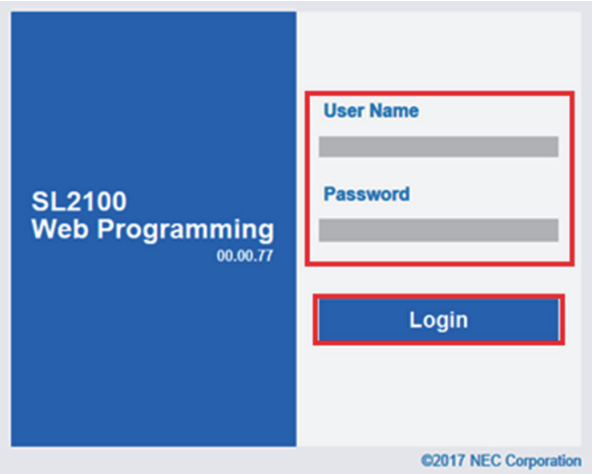

Figure 4-15 WebPro Login Screen

3. If the login is successful, the WebPro Home screen is displayed.

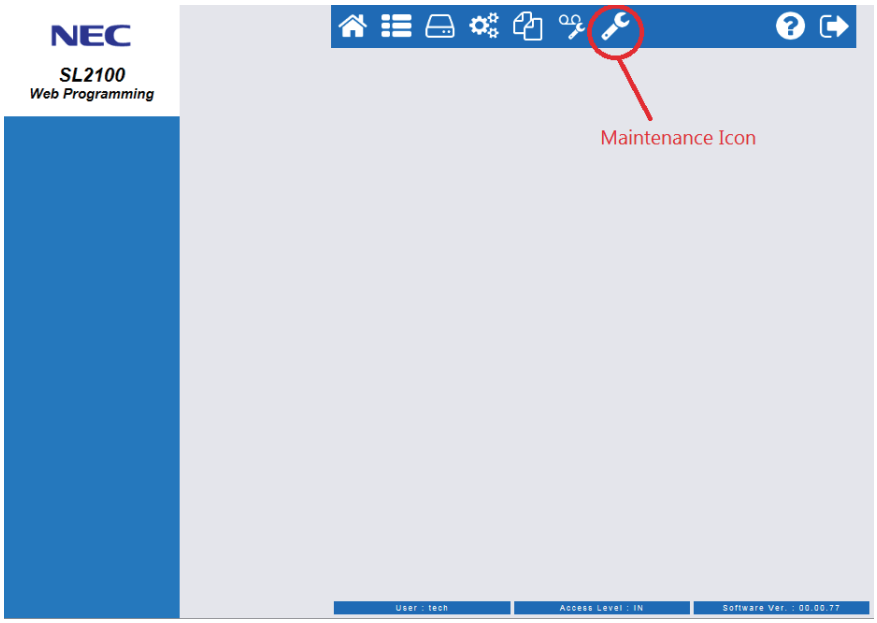

Figure 4-16 WebPro Home Screen

4. Click the Maintenance Icon .
Session Management screen is displayed and Click the “Software Update” at the left side menu.

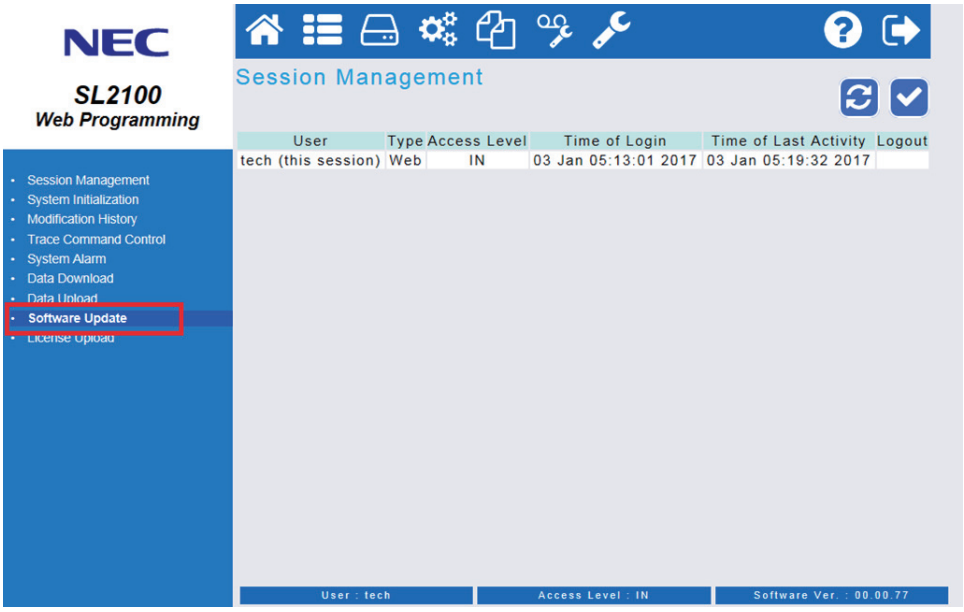

Figure 4-17 Session Management Screen

5. Software Update screen is displayed.
In the lower part of the Software Update screen (Manual Update area), select the **“Upload from PC”** and **browse** the update firmware package file (A file type is ***.bin**) which provided by NEC.

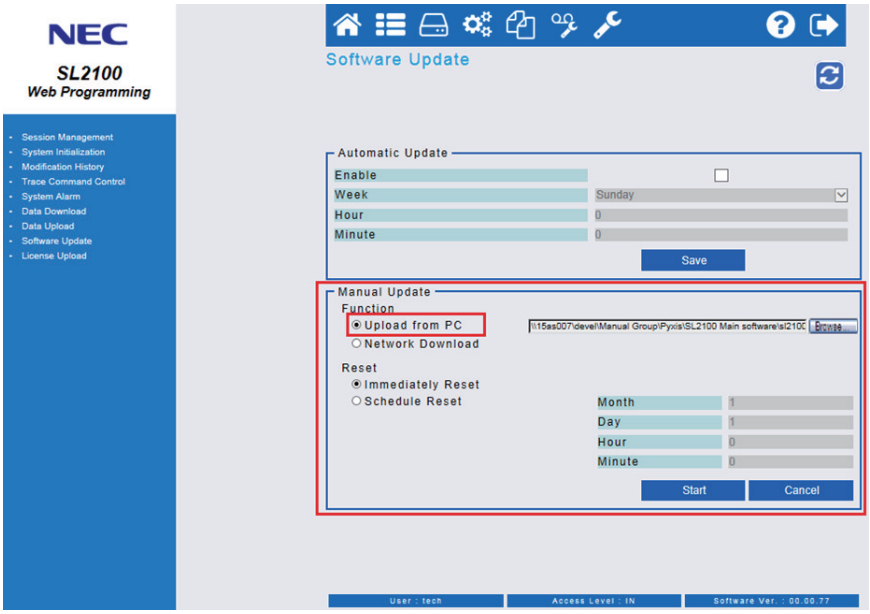

Figure 4-18 Software Update Screen

6. Select the **"Immediately Reset"**.

There are Immediately Reset or Schedule Reset can be selected when the firmware update will occur. The changes of the Firmware Update will only occur after the chassis is reset.

The Firmware Update should be executed at a suitable time when the chassis is not actively in use.

*If you choose the schedule reset, check **"Schedule Reset"** and set the **Month**, **Day**, **Hour** and **Minute**. WebPro uploads the firmware package file, and updates the system at the time you specified.*

The time you specify should be relative to the time on the chassis, not the local time of the PC.

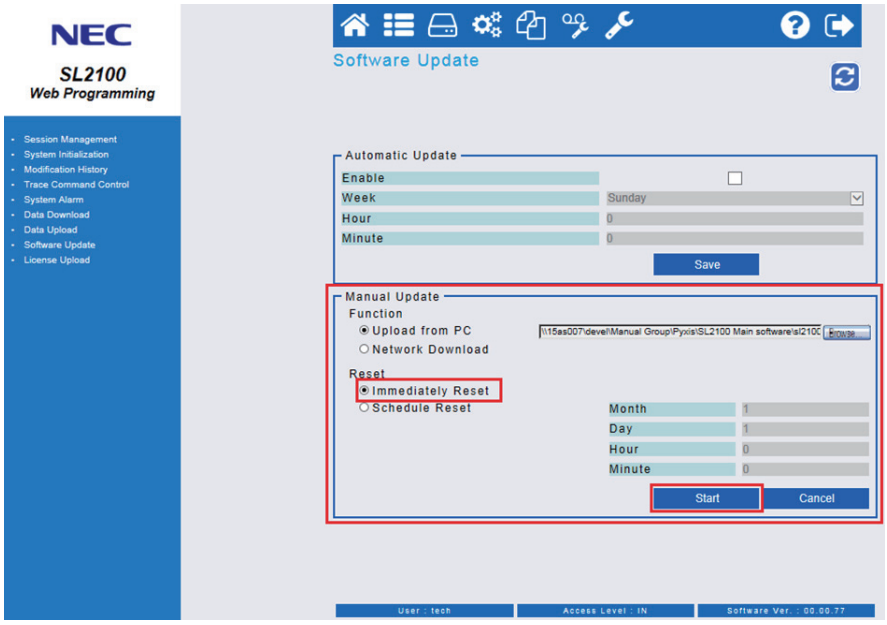

Figure 4-19 Select the "Immediately Reset"

Then, Click the **Start** button.

7. Following Message is displayed and click **OK** to start uploading to the system.

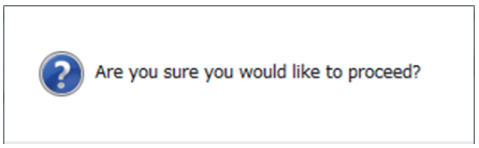

Figure 4-20 Confirmation Message

The time to upload the firmware package file is directly related to the file size. At present, the Firmware package file is about 60MB, so over LAN it may take several minutes.

8. WebPro starts uploading and the following message is displayed on the screen.

Wait until the following message appears on the window.

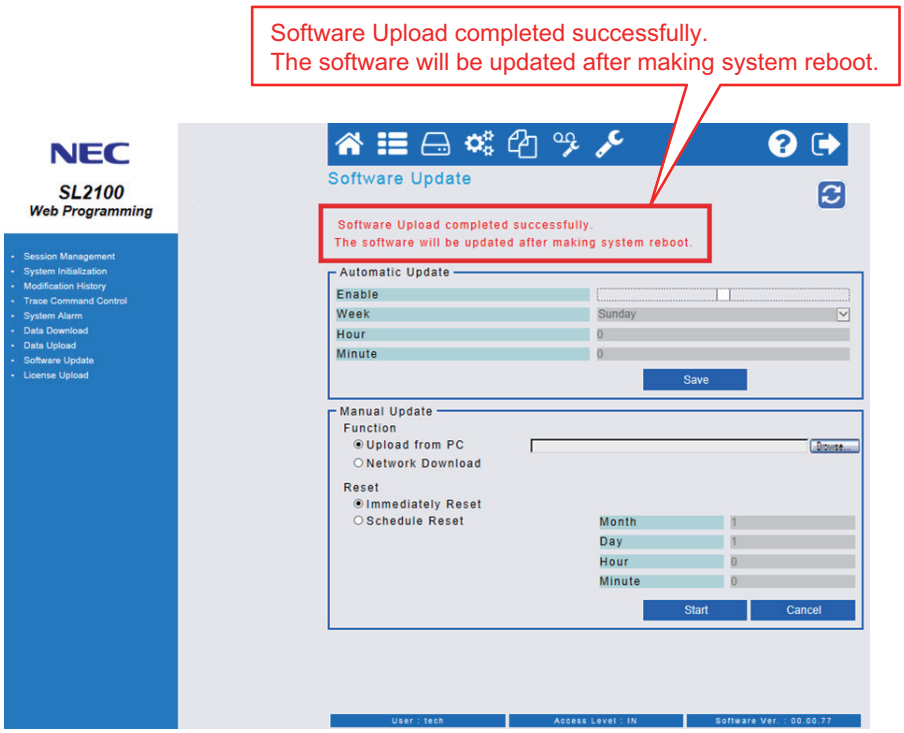

Figure 4-21

DO NOT click the Home or Back buttons on the browser, or close the WebPro browser, during uploading the Firmware, otherwise Upload stops.

*If you choose the Schedule Reset, the following message appears in Home screen until specified time. If you want to Cancel the update, click the **Cancel Update** button to cancel the update.*

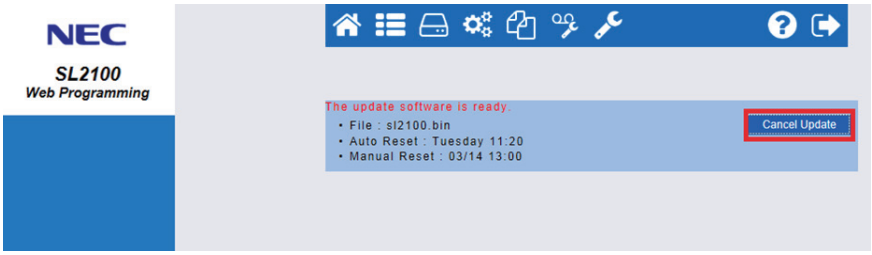

Figure 4-22 Cancel Update Screen

9. It will take about 10 minutes, the system reboot automatically and update is completed.

The WebPro will be disconnected from the system due to system rebooting.
*When the system re-started, press **F5** key (on your PC) to re-connecting the WebPro and confirm the new firmware version.*

Figure 4-23

Press the Navigation key in any display telephone to view the system Version Number, see Main Software Version Confirmation on page 4-5.

SECTION 3 LED INDICATIONS

The LEDs on the CPU indicate the following:

- RUN (D1) = The CPU is operating (Green)
- ALM (D2) = Alarm (Red)
- Refer to Program 90-10: System Alarm Setup for details on assigning alarm LEDs.

Table 4-1 CPU LED Indications on page 4-15 provides a list of each LED and associated operation and status indications.

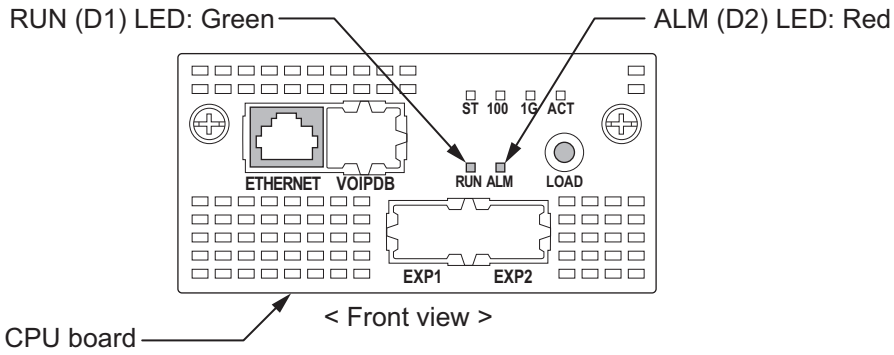

Figure 4-24 Location of the LEDs on the CPU Board

The priority order (No.1 ~ 16) is set up to each status and when more than one different status are occurred, the highest priority LED indication pattern (status) will be indicated.

Table 4-1 CPU LED Indications

Priority No.	Status	LED Indication	
		RUN (D1): Green	ALM (D2): Red
1	When system has started Up (only U-boot is execute)	Off	Off
2	Shutting down accept status (going to be powered off)	500ms On / 500ms Off	Off
3	Boot error	On	1s On / 1s Off
4	DSP/FPGA Download Error	Off	100ms On / 100ms Off
5	Security Tip Error	100ms On / 100ms Off	100ms On / 100ms Off
6	Reading Error of System Program	1s On / 1s Off	100ms On / 100ms Off
7	Completed the System Program Upgrade	1s On / 1s Off	1s On / 1s Off
8	Initializing System Program	Off	On
9	DSP/FPGA downloading	Off	1s On / 1s Off
10	Boot is starting	On	Off
11	IP address lease request	300ms On / 200ms Off / 300ms On / 200ms Off / 300ms On / 700ms Off	Off
12	DHCP Reset request	300ms On / 200ms Off / 300ms On / 200ms Off / 300ms On / 700ms Off	On
13	File accessing (SD Memory card/Flash ROM data is up-dating)	100ms On / 100ms Off / 100ms On / 100ms Off / 100ms On / 500ms Off	Off
14	Error alarm (Major) occurred	100ms On / 100ms Off	1s On / 1s Off
15	Error alarm (Minor) occurred	1s On / 1s Off	On
16	System Operating Normally	1s On / 1s Off	Off

MEMO

Specifications

SECTION 1 SYSTEM CAPACITY

Table 5-1 System Capacity

Hardware	Main Chassis	Main Chassis + Expansion Chassis 1	Main Chassis + Expansion Chassis 1 + Expansion Chassis 2	Comments
Number of Universal Slot (s) for Interface Board	**4 Slots**	**8 Slots**	**12 Slots**	
Chassis:				
IP7[ ]-4KSU-C1	1	2	3	
Battery:				
IP4WW-Battery Box (External Battery Box)	1	2	3	Batteries are not included.
Common Control Boards:				
IP7[ ]-CPU-C1 (Main Processor Board)	1	1	1	Insert to CPU/EXIFE exclusive slot in Main Chassis.
IP7WW-VoIPDB-C1 (VoIP Daughter Board)	1	1	1	Mount to the CPU-C1. This board provides 128 VoIP Gateway channels.
Expansion Boards:				
IP7WW-EXIFB-C1 (2-jack Expansion Daughter Board for Main Chassis)	1	1	1	Mount to the CPU-C1 in Main Chassis.
IP7WW-EXIFE-C1 (1-jack Expansion Board for Expansion Chassis)	0	1	2	Insert to CPU/EXIFE exclusive slot in Expansion Chassis.
Trunk and Station Boards:				
IP7WW-308U-A1 (3 Analog Trunk and 8 Hybrid/ Analog Extension Interface with Relay/Audio ports)	4	8	12	Slot No.4 of each Chassis does not support any type of Multiline Terminals.
Station Boards:				
IP7WW-082U-B1 (8 Digital Extension and 2 Analog Extension Interface with Relay/Audio ports)	4	8	12	Slot No.4 of each Chassis does not support any type of Multiline Terminals.
IP7WW-008U-C1 (8 Hybrid/Analog Extension Interface)	4	8	12	
IP7WW-000U-C1 (Extension board for mount a Trunk Daughter Board)	4	8	12	
Trunk Daughter Boards:				

Hardware	Main Chassis	Main Chassis + Expansion Chassis 1	Main Chassis + Expansion Chassis 1 + Expansion Chassis 2	Comments
IP7WW-3COIDB-C1 (3 Analog Trunk Interface)	4	8	12	
IP7WW-2BRIDB-C1 (2 Basic Rate Interface)	4	8	12	
IP7WW-1PRIDB-C1 (1 Primary Rate Interface)	1	2	3	
Optional Items:				
IP7WW-SDVMS-C1	1	1	1	
IP7WW-SDVML-C1	1	1	1	

SECTION 2 SYSTEM SPECIFICATIONS

2.1 General Precautions

- Never attempt to insert wires, pins, etc. into the vents or other holes of the equipment.
- Do not use benzene, thinner, or the like, or any abrasive powder to clean the equipment. Wipe it with a soft cloth.

2.2 Environmental Requirements

Meeting established environmental standards maximizes the life of the system. Be sure that the site is not:

- In direct sunlight or in hot, cold or humid places.
- In dusty areas or in areas where sulfuric gases are produced.
- In places where shocks or vibrations are frequent or strong.
- In places where water or other fluids comes in contact with the equipment.
- In areas near high-frequency machines or electric welders.
- Near computers, telexes, microwaves, air conditioners, etc.
- Near radio antennas (including shortwave)

2.3 Operating Conditions

Table 5-2 Operating Conditions

Unit	Operating Conditions
Chassis, Boards and Multiline Telephones	Temperature: 0 to +40 degree C (32 to 104 degree F) Humidity: 10 to 90% (non-condensing)
Doorphone Box	Temperature: -20 to +60 degree C (-4 to 140 degree F) Humidity: 20 to 80% (non-condensing)

2.4 Site Requirements

A Chassis can only be wall-mounted or 19 Inch rack mounted (using the shelf plate).

2.5 AC Power Requirement

A dedicated 100V-120V/220V/230V/240V 50/60Hz circuit located within 2 meters of the Chassis is required. A separate dedicated AC outlet is necessary for each Chassis.

Double Pole/Neutral Fusing
(Power supply fuses are located at both the L and N side.)

Table 5-3 Power Requirement

	110VAC	120VAC	220VAC	230VAC	240VAC
Power Requirement	110 VAC@15 A	120 VAC@15 A	220 VAC@15 A	230 VAC@15 A	240 VAC@15 A
Power Consumption	Main Chassis = 143 VA	Main Chassis = 150VA	Main Chassis = 185 VA	Main Chassis = 182 VA	Main Chassis = 182 VA
	3 Chassis Total = 429 VA	3 Chassis Total = 450VA	3 Chassis Total = 541 VA	3 Chassis Total = 545 VA	3 Chassis Total = 547 VA
Input Voltage (Rated Voltage)	90 VAC to 264 VAC (100VAC/120VAC/220VAC/230VAC/240VAC)				

	110VAC	120VAC	220VAC	230VAC	240VAC
Frequency	47 Hz - 63 Hz (Rated Frequency: 50/60 Hz)				
Phase and Wire	Single Phase, 2 Line + PE Type				
Ground Requirement	No.14 AWG Copper Wire				
Feeding Voltage	SLT: 20 mA/-27 V				
AC Input I	Main Chassis = 1.43 A 3 Chassis Total = 4.29 A	Main Chassis = 1.25 A 3 Chassis Total = 3.75 A	Main Chassis = 0.82 A 3 Chassis Total = 2.46 A	Main Chassis = 0.79 A 3 Chassis Total = 2.37 A	Main Chassis = 0.76 A 3 Chassis Total = 2.28 A
KWh	Main Chassis = 0.143 KWh 3 Chassis Total =0.429 KWh	Main Chassis = 0.150 KWh 3 Chassis Total =0.450 KWh	Main Chassis = 0.185 KWh 3 Chassis Total =0.541 KWh	Main Chassis = 0.182 KWh 3 Chassis Total =0.545 KWh	Main Chassis = 0.182 KWh 3 Chassis Total =0.547 KWh
BTU(KWh x 3413)	Main Chassis = 488 BTU 3 Chassis Total =1464 BTU	Main Chassis = 512 BTU 3 Chassis Total =1536 BTU	Main Chassis = 631 BTU 3 Chassis Total =1894 BTU	Main Chassis = 621 BTU 3 Chassis Total =1863 BTU	Main Chassis = 621 BTU 3 Chassis Total =1863 BTU

2.6 Electrical Specifications <Power Supply> (Chassis)

Table 5-4 Electrical Specifications of Chassis

Item	Specification
Output Voltage	-27 V (54 W)
Output Current	2.0 A

2.7 CPU

SL2100		
CONTROL SYSTEM		Digital
MPU	**Manufacturer/ Name**	HITACHI OPV5HB-23-C
	MPU Architecture	Cortex-A9 (3core)
	Core Frequency	800 MHz
PROGRAM STORAGE	**NAND Flash**	256 MB
DATA STORAGE	**SDRAM**	128 MB x 2
SWITCHING (Time Division Matrix)		402 x 402 (Non-Blocking)

2.8 Traffic Capacity

Traffic Capacity	Basic System Package	Expanded System Package
Traffic Capacity	2540 BHCA	2540 BHCA

2540 Busy-Hour Call Attempts (BHCA) is based on a Full Capacity.

2.9 IP Terminal Power Chart

Table 5-5 IP Terminal Power Chart

IP Terminal	IEEE 802.3af Class	Label Indication (Maximum Current with All Options)				Note
		48 VDC		27 VDC		
IP7WW-8IPLD-C1 TEL	Class1	75 mA	3.6 W	-	-	
IP4WW-24TIXH-C TEL	Class 2	130 mA	6.2 W	235 mA	6.3 W	

2.10 IEEE802.af Class Specification

Table 5-6 IEEE802.af Class Specification

IEEE802.af	Minimum	Maximum
Class 1	-	3.84 W
Class 2	3.84 W	6.49 W

2.11 SLT Ring Signal Specification

Table 5-7 SLT Ring Signal Specification

Description		Specification	
Normal Current		308U-A1 25 mA @ 300 Ω 21 mA @ 600 Ω	082U-B1 22 mA @ 300 Ω 20 mA @ 600 Ω
Ring Signal	Voltage	75 VAC	
	Frequency	20 Hz or 25 Hz	

2.12 Mechanical Specifications

Table 5-8 Mechanical Specifications

Equipment	Width	Depth	Height	Weight	Note
IP7[ ]-4KSU-C1	330 mm (12.99 in)	92.9 mm (3.66 in)	435 mm (17.13 in)	2.2 kg (excluding option board) (77.60 oz) 4.0 kg (including five option boards) (141.10 oz)	
IP4WW-Battery Box	500 mm (19.69 in)	230 mm (9.06 in)	340 mm (13.39 in)	10.3 kg (excluding battery) (363.32 oz) 15.6 kg (including battery) (550.27 oz)	Battery itself is NOT attached
IP7WW-12TXH-A1 TEL (BK)	181mm (7.13 in)	221mm (8.70 in)	136mm (5.35 in)	0.82kg (28.92 oz)	
IP7WW-24TXH-A1 TEL (BK)	181mm (7.13 in)	221mm (8.70 in)	136mm (5.35 in)	0.83kg (29.28 oz)	
IP7WW-12TXH-B1 TEL (BK)	181mm (7.13 in)	221mm (8.70 in)	136mm (5.35 in)	0.86kg (30.34 oz)	
IP7WW-24TXH-B1 TEL (BK)	181mm (7.13 in)	221mm (8.70 in)	136mm (5.35 in)	0.87kg (30.69 oz)	

Equipment	Width	Depth	Height	Weight	Note
IP7WW-8IPLD-C1 TEL (BK)	178mm (7.01 in)	221mm (8.70 in)	133mm (5.24 in)	0.9kg (31.75 oz)	
IP7WW-60D DSS-A1 CONSOLE (BK)	122mm (4.80 in)	221mm (8.70 in)	133mm (5.24 in)	0.43kg (15.17 oz)	
IP7WW-60D DSS-B1 CONSOLE (BK)	122mm (4.80 in)	221mm (8.70 in)	133mm (5.24 in)	0.43kg (15.17 oz)	
Door Box (DP-D-1( ))	98mm (3.85 in)	28.5mm (1.12 in)	130mm (5.12 in)	0.2kg (7.05 oz)	
DTZ-12D/24D-3P ( ) TEL	179mm (7.05 in)	258mm (10.16 in)	111.7mm (4.40 in)	1.2kg (42.33 oz)	
DCZ-60-2( ) (BK) CONSOLE	210mm (8.27 in)	250mm (9.84 in)	80mm (3.15 in)	0.78kg (27.51 oz)	
Standard SIP Phone ITX-1DE-1W (BK) TEL	152mm (5.98 in)	225mm (8.86 in)	95mm (3.74 in)	0.72kg (25.40 oz)	
BCA-ZA UNIT	65mm (2.56 in)	72mm (2.84 in)	25mm (0.98 in)	0.08kg (2.82 oz)	

2.13 Optional Unit Mechanical Specifications

Table 5-9 Optional Unit Mechanical Specifications

Unit	Width	Depth	Height	Weight	Note
IP7[]-CPU-C1	103.2 mm (4.063 in)	232.7 mm (9.16 in)	51.6 mm (2.03 in)	150 g (5.29 oz)	
IP7WW-EXIFB-C1	65.5 mm (2.58 in)	138 mm (5.43 in)	17.5 mm (0.69 in)	55 g (1.94 oz)	
IP7WW-EXIFE-C1	103.2 mm (4.063 in)	232.7 mm (9.16 in)	51.6 mm (2.03 in)	128.3 g (4.53 oz)	
IP7WW-308U-A1	137 mm (5.39 in)	232.7 mm (9.16 in)	27.8 mm (1.09 in)	199.2 g (7.03 oz)	
IP7WW-082U-B1	137 mm (5.39 in)	232.7 mm (9.16 in)	27.8 mm (1.09 in)	208.7 g (7.36 oz)	
IP7WW-008U-C1	137 mm (5.39 in)	232.7 mm (9.16 in)	27.8 mm (1.09 in)	171.5 g (6.05 oz)	
IP7WW-000U-C1	137 mm (5.39 in)	232.7 mm (9.16 in)	27.8 mm (1.09 in)	140.8 g (4.97 oz)	
IP7WW-3COIDB-C1	60 mm (2.36 in)	202 mm (7.95 in)	23.4 mm (0.92 in)	68.6 g (2.42 oz)	
IP7WW-2BRIDB-C1	110 mm (4.33 in)	203 mm (7.99 in)	23.4 mm (0.92 in)	103.8 g (3.66 oz)	
IP7WW-1PRIDB-C1	110 mm (4.33 in)	203 mm (7.99 in)	23.4 mm (0.92 in)	90.4 g (3.19 oz)	
IP7WW-VOIPDB-C1	66 mm (2.60 in)	146.5 mm (5.77 in)	18 mm (0.71 in)	71.5 g (2.52 oz)	
IP7WW-SDVMS-C1	24 mm (0.94 in)	32 mm (1.26 in)	2.1 mm (0.08 in)	1.7 g (0.06 oz)	
IP7WW-SDVML-C1	24 mm (0.94 in)	32 mm (1.26 in)	2.1 mm (0.08 in)	1.7 g (0.06 oz)	

2.14 Doorphone Interface Specifications

Table 5-10 Doorphone Interface Specifications

Item	Specification
Output Impedance	600 Ω
Output Level	Nominal 500 mV (-10 dBm)
Maximum Output	1.75 V RMS

2.15 General Purpose/Door Unlock Relay Specifications

Table 5-11 General Purpose/Door Unlock Relay Specifications

Item	Specification
Rated Voltage	DC 48 V Maximum
Rated Current	DC 320 mA Maximum
Contact	Normally Open

2.16 External Paging Output Specifications

Table 5-12 External Paging Output Specifications

Item	Specification
Output Impedance	600 Ω @ 1 kHz
Output Level	Nominal 250 mV (-10 dBm)
Maximum Output	400 mV RMS

2.17 BGM/ExMOH Source Input Specifications

Table 5-13 BGM/External MOH Source Input Specifications

Item	Specification
Input Impedance	High Impedance (>10 kΩ)
Input Level	Nominal 250 mV (-10 dBm)
Maximum Input	1 V RMS

2.18 External Sensor Device Interface Specifications

Table 5-14 External Sensor Device Interface Specifications

Applied Voltage during Sensor Off	Loop Current during Sensor On	Port Assignment
25 V	40 mA	Program 10-03-05: 1 (Read only) * Port assignment should be set on Doorphone mode by Hardware-Switch on 308U/082U board.

The External Sensor device configuration shall be assigned by Hardware Switch and applied voltage during sensor off is supported 25 V type only.

2.19 CPU Board LAN Port Specifications

Table 5-15 CPU Board LAN Port Specifications

Item	Specification
Standard	IEEE802.3 100Base-TX Compliant (Full Duplex only)
Access	CSMA/CD
I/F (Layer 1)	Speed: 100 Mbps Full duplex Cable: CAT5 or better, Straight/Cross Auto Crossover

2.20 Cabling Requirements

- Do not run extension cable in parallel with the AC source, telex or computer etc. If the cables are near cable runs to those devices, use shielded cable with grounded shields or install the cable in conduit.
- When cables must be run on the floor, cable protectors must be used.
- Cable runs for Multiline Telephones, DSS Consoles, Single Line Telephones, and Doorphone Boxes must be a dedicated, isolated cable pair.
- Aerial distribution cabling is not allowed.
- Trunk Lines must be installed with lightning protectors.
- Do not use 4-wire cabling for SLT connections.

2.21 Cable Requirements

Table 5-16 Cable Requirements

Device	Cable Type	Cable Run Length
4W Hybrid Multiline Telephone 2W Digital Multiline Telephone DT430 Multiline Terminal	24 AWG (Φ0.5 mm)	300 m (984.3 ft)
IP Multiline Terminal Standard SIP Phone	CAT5 Straight Cable	100 m (328.1 ft)
DSS Console	24 AWG (Φ0.5 mm)	300 m (984.3 ft)
Single Line Telephone Analog Terminals (20mA)	24 AWG (Φ0.5 mm)	1,125 m (3,691ft)
Doorphone Box	24 AWG (Φ0.5 mm)	150 m (492.1 ft)
CPU LAN Port to External Device	Ethernet Cross Cable	100 m (328.1 ft)
CPU LAN Port to Switching Hub	Ethernet Straight Cable	100 m (328.1 ft)
ISDN Terminal	4-wire, 24 AWG (Φ0.5 mm)	100 m (328.1 ft) (P-MP Short -passive) 300 m (984.3 ft) (P-MP Long -passive) 500 m (1,640.4 ft) (P-P)
4KSU-C1 Expansion	Ethernet Straight Cable (Attached to IP7WW-EXIFE-C1)	1.2 m (3.9 ft)

MEMO

SL2100

Hardware Manual

NEC Corporation

ISSUE 1.0