TOWER Plus

INSTALLATION AND OWNER'S MANUAL

Model RSX1000 - Class I Vehicular Slide Gate Operator - 230 VAC

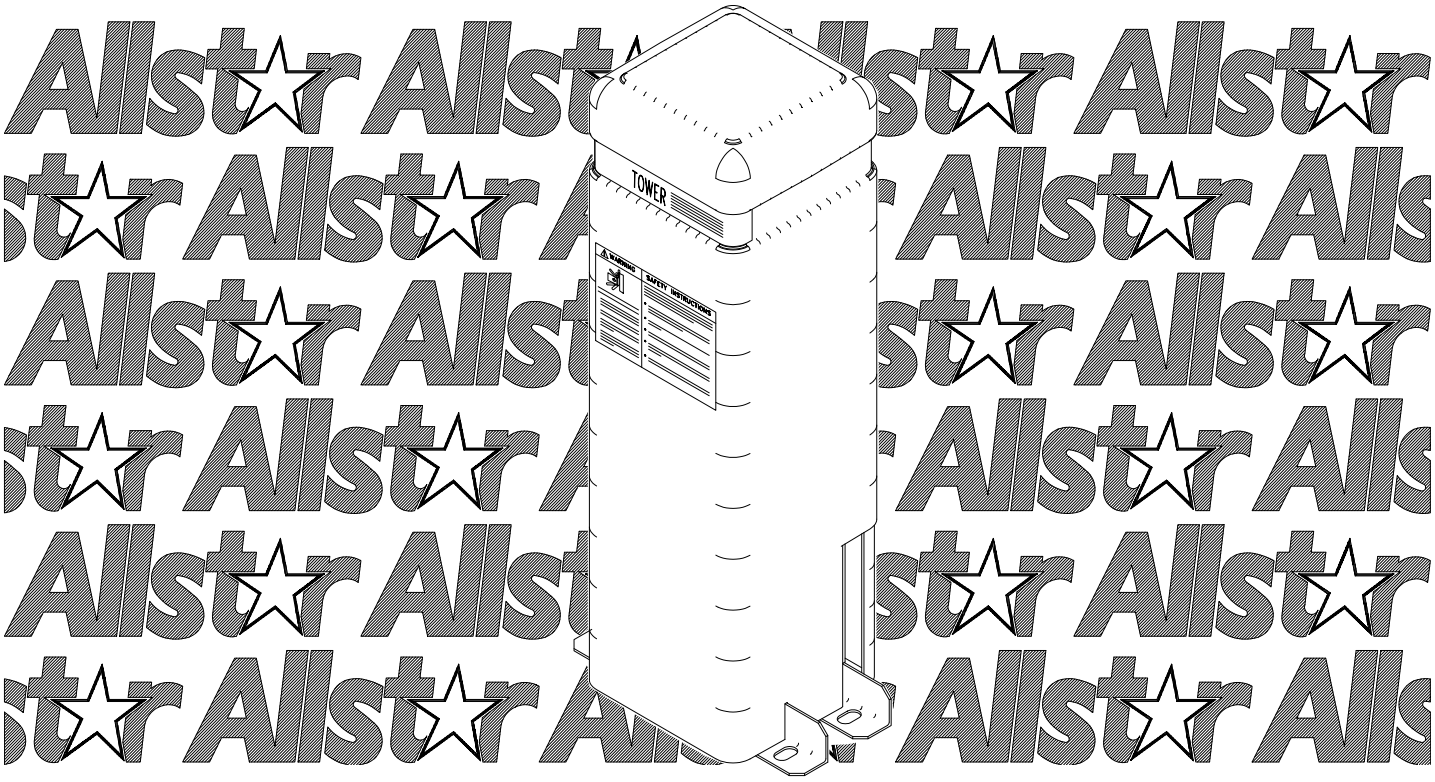

103690

Serial #:
Date Installed:
Your Dealer:

READ THIS MANUAL CAREFULLY BEFORE INSTALLATION OR USE

SAVE THESE INSTRUCTIONS

Allstar's CGA2K™ TECHNOLOGY!

As of date of manufacture, meets all ANSI/UL 325 Safety Requirements for Vehicular gate operators

TABLE OF CONTENTS

Pre-Installation Notes....3
Operator Class Information....3
Section A: Gate System Design/Installation....4& 5
Section B: Preparing the Site....6
The Concrete Operator Pad....6
Electrical Power Requirements....6
Placing Vehicle Detector Loops....7
Section C: Installing the Operator....8
Attaching the Chain Bracket....8
Placing the Tower Operator....8
Electrical Hookup....9
Control Accessory Equipment Wiring....9
Wiring a 3 Button Station....10
Bi-Parting (Master/Slave) Application....10
Optional Photoelectric Thru Beam Sensor....11
Optional Photoelectric Retro-Reflective Sensor..12
Optional Electric Edge Sensor....13
Wiring Vehicle Detectors....14
Wiring Radio Receivers....14
Wiring Keypad or Telephone Entry....15
Left/Right Hand Installations....15
Mounting the Limit Cams....16
Presetting the Sensitivity Adjustment....17
Timer To Close Adjustment....17
Final Installation Checklist....17
Pre-Power On Checklist....17
Section D: Starting the Operator....17
Final Settings....18
Maximum Run Timer....18
Notes....18
Section E: End User Instructions....19
Terminal Strip Reference Chart....19 & 20
Operational Guide for the End User....20
Manual Operation....20
Safety Guide for the End User....21 & 22
Wiring Diagram....23
Technical Specifications....24
Warranty....24

WARNING HIGH VOLTAGE

ONLY A QUALIFIED TECHNICIAN SHOULD SERVICE THIS GATE OPERATOR

PERIODICALLY TEST SENSITIVITY OF OVERLOAD
***** READ MANUAL *****

LOG DATE OVERLOAD TEST				DATES OPERATOR SERVICED
DATE TESTED	DATE TESTED	DATE TESTED	DATE TESTED	

Figure 1

READ THESE STATEMENTS CAREFULLY AND FOLLOW THE INSTRUCTIONS CLOSELY.

The Warning and Caution boxes throughout this manual are there to protect you and your equipment. Pay close attention to these boxes as you follow the manual.

WARNING	CAUTION	WARNING	CAUTION
Indicates a MECHANICAL hazard of INJURY OR DEATH. Gives instructions to avoid the hazard.	Indicates a MECHANICAL hazard of DAMAGE to your gate, gate operator, or equipment. Gives instructions to avoid the hazard.	Indicates an ELECTRICAL hazard of INJURY OR DEATH. Gives instructions to avoid the hazard.	Indicates an ELECTRICAL hazard of DAMAGE to your gate, gate operator, or equipment. Gives instructions to avoid the hazard.

The Model RSX1000 Vehicular Gate Operator will provide convenience and assurance to the ultimate users for many years. It is ruggedly built of the finest materials and has been thoroughly inspected and tested at the Allstar factory. It has many features that will aid in the installation and testing of the complete gate system. The RSX1000 has been designed to meet the safety requirements of ANSI/UL Standard for Safety 325.

BEFORE ATTEMPTING INSTALLATION, READ THIS MANUAL CAREFULLY SO YOU WILL BE THOROUGHLY FAMILIAR WITH THE FEATURES OF THE RSX1000 AND ITS PROPER INSTALLATION PROCEDURES.

The RSX1000 Vehicular Gate Operator is designated a Class I Vehicular Horizontal Slide Gate Operator, and is intended for usage in a residential home, maximum of four single families in the dwelling, or a garage or parking area associated with such a home, or a similar location with regard to the cycle usage (see below). Vehicular Gate operators are also designated Class II (high cycle usage commercial location or multi-family home), III (industrial location not intended to service the general public, i.e. factories), and IV (secure or restricted access locations, i.e. airports and prisons). The RSX1000 model operator cycle usage is rated at a maximum of 10 cycles per hour, 50 cycles maximum per day.

The RSX1000 (as well as gate operators sold by other manufactures) is designed to start and move vehicular slide gates weighing as much as 300 pounds with a maximum of 16 feet in length. As such, the RSX1000 is capable of producing high levels of force. It is important in the design of the total gate system that designers, installers and users be aware of the hazards that may be associated with the **IMPROPER** design, installation and use of vehicular gate systems and gate operators.

The gate operator is only one part of a complete automatic gate operating system. As each location and usage is different, a properly designed system will include all applicable safety devices.

As the designer and installer of the **GATE SYSTEM**, you must advise the purchaser on the proper use of the gate system. You also have the primary responsibility of insuring that **ALL** possible operational hazards have been considered and eliminated. **YOU MUST ADVISE AND WARN** the purchaser and the ultimate user of **ANY HAZARDS** that you have not been able to eliminate.

The RSX1000 has several features that can help reduce the hazards of your gate system.

The Allstar RSX1000 has a built-in "Overload Detector" that can help reduce the hazards of your gate system. This mechanism, however, must not be considered as the primary obstruction sensing system. Consider all available options (electric leading edges, photoelectric sensors, protective screen mesh, etc.) to eliminate hazards in your gate system design.

The RSX1000's built-in overload detector will activate if there is an increase in force above that normally required to move the gate. The sensitivity is independently adjustable for the **OPEN** or **CLOSE** direction. **THE SENSITIVITY ACTIVATION POINTS ARE ADJUSTABLE SETTINGS THAT MUST BE DETERMINED AT THE TIME OF INSTALLATION. THE SETTINGS MUST BE TESTED PERIODICALLY TO INSURE PROPER OPERATION. THE MORE FREELY THE GATE WILL MOVE THE MORE RESPONSIVE THE SETTINGS CAN BE MADE. DILIGENT MAINTENANCE OF THE GATE ROLLERS AND THE GATE TRACK WILL ASSURE THE MOST RESPONSIVE OPERATION OF THE SENSITIVITY MECHANISM.** (See Page 17).

Adevise the purchaser to check the sensitivity of the Overload Device periodically and record the date tested on the Log provided on page 2 (see Figure 1).

THE IMPORTANT SAFEGUARDS AND INSTRUCTIONS IN THIS MANUAL CANNOT COVER ALL POSSIBLE CONDITIONS AND SITUATIONS WHICH MAY OCCUR DURING ITS USE. IT MUST BE UNDERSTOOD THAT COMMON SENSE AND CAUTION MUST BE EXERCISED BY THE PERSON(S) INSTALLING, MAINTAINING AND OPERATING THE EQUIPMENT DESCRIBED HEREIN. DO NOT USE THIS EQUIPMENT FOR ANY OTHER THAN ITS INTENDED PURPOSE — OPERATING A SLIDE GATE.

Connections for External Entrapment Prevention Sensors

Because all gate system installations are different, the RSX1000 control panel provides independent connections for Open and Close non-contact (photoelectric) and contact (edge) sensors. In this way a photoelectric sensor could be utilized to guard the gate area when closing and an edge sensor would provide the protection when opening. Depending on the particular application a combination contact and non-contact sensor protection system for the open and close directions may provide more effective entrapment protection than a single device for both directions. See pages 4, 5, 11, 12, 13, 19, 20, 21, and 22.

SMART™ Self adjusting MAximum Run Timer

The RSX1000 has a **S**elf adjusting **MA**ximum **R**un **T**imer, SMART™. The amount of time for the first few cycles of operation are registered and averaged within the motor controller circuitry. After the first few initial cycles, if the gate is activated and no other command is given or an end limit (open or close) is not reached in the previously counted cycle time plus approximately 2 seconds, the operator will be turned off. See page 18.

OTHER FEATURES

Auto Close Timer: Adjustable from 2 to 60 seconds, provides an automatic closure of the gate from the full open position. See page 17 and 18.

WARNING!

TO REDUCE THE RISK OF SEVERE INJURY OR DEATH: READ AND FOLLOW ALL INSTALLATION INSTRUCTIONS AND GATE SYSTEM DESIGN PARAMETERS!

GATE SYSTEM DESIGN AND INSTALLATION SAFETY CHECK LIST:

- The RSX1000 operator may be installed only on a Class I Vehicular Slide Gate. See page 3 for an explanation of the different Class locations. See the last page of this manual for the operator specifications (voltage, maximum gate weight & length etc.).
- Make sure that the gate moves freely, all rollers are in good working order, the gate does not bind in any manner and the gate area is clean and free of irregularities. DO NOT INSTALL THE OPERATOR UNTIL ALL GATE PROBLEMS HAVE BEEN CORRECTED.
- Do not increase the built-in overload detector adjustment to compensate for a poorly working gate. A well maintained gate will ensure easy manual operation (if needed) and maximum operator obstruction sensitivity.
- Install the operator on the inside of the property/fence line. DO NOT install an operator on the public side of the fence line or gate.
- Make sure the gate operating system is placed far enough back from the road to eliminate traffic backup. The distance from the road, size of the gate, usage level and gate cycle/speed must be taken into consideration to eliminate potential hazards.
- The gate must be installed in a location so that enough clearance is supplied between the gate and any adjacent structures when opening and closing to reduce the risk of entrapment.
- For ORNAMENTAL "GRILL TYPE" GATES (or any other type of open gate where a handhold or toehold may be achieved), injuries may occur when people put arms through the openings or children "ride" the gate by standing on the bars and holding on to the gate. THIS POTENTIAL HAZARD CAN BE MINIMIZED BY INSTALLING A MESH SCREEN ON THE GATE. Allstar strongly recommends the entire gate and adjacent fence area the gate covers when open be meshed or guarded such that a handhold or toehold cannot be achieved. At a minimum all openings on a horizontal slide gate must be guarded or screened from the bottom of the gate to a mimimum of 4 feet above the ground to prevent a 2-1/4 inch (57.15 mm) sphere from passing through the openings anywhere in the gate, and in that portion of the fence the gate covers when in the open position. See Figure 2.

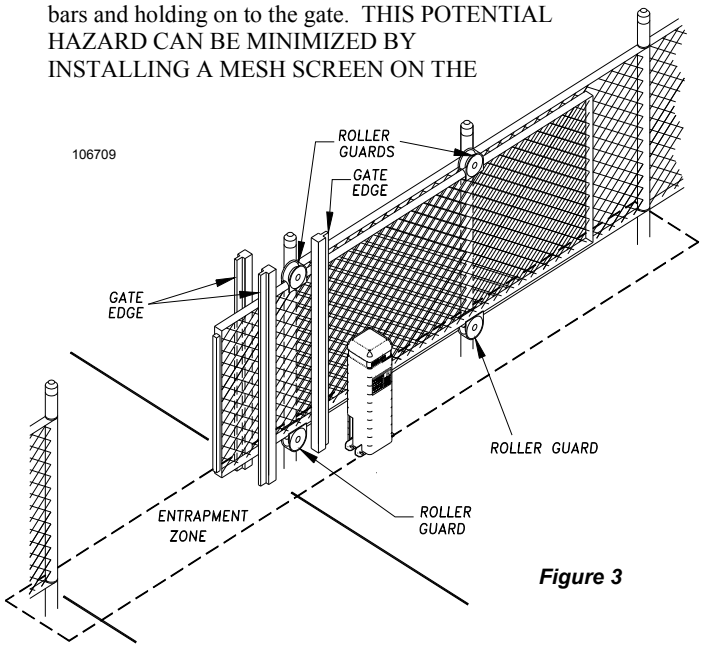

Figure 3

Figure 2

- All RSX1000 gate operators are VEHICULAR GATE OPERATORS and as such are NOT INTENDED FOR PEDESTRIAN traffic. In installations where pedestrians passage through the fence is necessary, install a pedestrian access opening. The pedestrian access opening shall be designed to promote pedestrian usage. Locate the vehicular gate and the pedestrian access opening such that persons will not come into contact with the vehicular gate during entire path of travel of the vehicular gate. See page 21 for additional information.
- Use the illustration at left (Figure 3) and the diagrams and information on pages 11, 12, and 13 to minimize the risk of injury in your design of the slide gate operator system. IDENTIFY THE ENTRAPMENT ZONES AND PINCH POINT AREAS IN YOUR GATE. Design the gate installation to minimize the risk of entrapment in these areas. Install additional safety equipment such as electric gate edges and photocells to further minimize risk. All entrapment zones are required to be protected.
- **Entrapment Zones:** Design in personal entrapment protection devices to protect people from entrapment in the zones shown in Figure 3 at left and the diagrams and information on pages 11, 12, and 13. Install vertical posts with electric gate edges attached on both sides of the gate to prevent body entrapment.
- **Pinch Points:** Use protective measures (guards, padded edges, etc.) to protect people from the pinch points shown in Figure 3 and the diagrams and information on pages 11, 12, and 13. Attach roller guards in cantilevered gate systems to minimize the risk of hands being caught between the top of the gate and the roller.

- DO NOT consider the built-in overload detector as the primary defense system. Consider all options in the gate system design.
- DO NOT connect any auxiliary equipment to the RSX1000 operator (detectors, card readers, etc.) until the gate operator and all its functions are fully tested. Only connect one device at a time and ensure its proper function(s) before moving on to the next device.
- DO NOT locate any control device (key switch, switch, key pad, card reader, etc.) in a position where it may be activated by a person reaching through the gate or while touching the gate in any manner. Locate all control devices a minimum of 10 feet from the gate when opened or closed.
- Outdoor or easily accessible controls must be of the security type to prevent unauthorized use of the system.
- Install all devices that will Open, Close or Stop the gate in such a manner that THE GATE WILL BE IN FULL VIEW WHEN THE DEVICE IS OPERATED.
- Before activating the "timer to close" option of the RSX1000, ENSURE THE PERSONAL ENTRAPMENT PROTECTION DEVICES (operator reversing feature, edges, photocells) ARE OPERATING and install VEHICLE DETECTOR LOOPS AND VEHICLE DETECTORS for protection of user vehicles. Read the manual for information on the installation of these devices. IF VEHICLE DETECTOR LOOPS HAVE BEEN INSTALLED TO PREVENT THE GATE FROM CLOSING ON A VEHICLE, INSTRUCT THE USER TO PERIODICALLY CHECK THE OPERATION OF THE DETECTORS.
- USE EXTREME CAUTION WHEN WORKING NEAR THE BELTS AND PULLEYS when the operator cover is removed. Apply power to the operator only when instructed to do so.
- When the cover of the RSX1000 Control Box cover is removed, high voltage will be exposed. NEVER LEAVE THE INSTALLATION WITH THE CONTROL BOX COVER REMOVED.
- ALWAYS TURN OFF THE POWER BEFORE ATTEMPTING SERVICE OF EITHER THE ELECTRICAL OR MECHANICAL SYSTEMS.
- SECURELY ATTACH THE WARNING SIGNS provided with the RSX1000 on the gate (one on the outside and one on the inside) where they can be seen by persons in the area of the gate to alert them of automatic gate operation. Full compliance with the UL requirements requires the signs be installed. (If the user refuses to have the warning signs installed we (as the Gate Operator Manufacturer) recommend that you note this on your records and have the user sign a disclaimer.) See Figure 4.

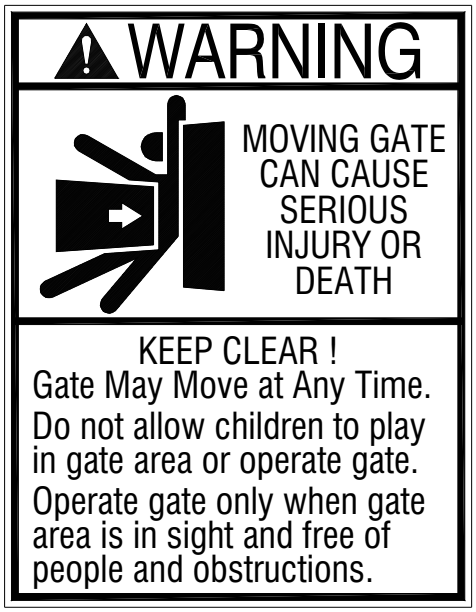

104880 *Figure 4*

AS THE INSTALLER YOU ARE RESPONSIBLE FOR:

1) **ASSURING THAT THE GATE AND OPERATOR SYSTEM, WHEN FULLY INSTALLED AND OPERABLE, COMPLIES WITH ALL APPLICABLE REQUIREMENTS OF UL325: STANDARD FOR SAFETY FOR DOOR, DRAPERY, GATE, LOUVER AND WINDOW OPERATORS AND SYSTEMS.**
2) **ASSURING THAT THE OWNER/END USER OF THE SYSTEM UNDERSTANDS ITS BASIC OPERATION AND SAFETY FEATURES. IN PARTICULAR, BE SURE THE OWNER/END USER UNDERSTANDS THE LOCATION AND OPERATION OF A MANUAL DISCONNECT (WHERE PROVIDED) OR HOW TO OPERATE THE GATE .**
3) **YOU ALSO HAVE THE PRIMARY RESPONSIBILITY OF INSURING THAT ALL POSSIBLE OPERATIONAL HAZARDS HAVE BEEN CONSIDERED AND ELIMINATED. YOU MUST ADVISE AND WARN THE PURCHASER AND THE ULTIMATE USER OF ANY HAZARDS THAT YOU HAVE NOT BEEN ABLE TO ELIMINATE.**
4) **POINTING OUT TO THE OWNER/END USER OF THE GATE SYSTEM THAT CHILDREN OR PETS ARE NOT ALLOWED TO PLAY ON OR NEAR THE GATE, FENCE OR ANY PART OF THE SYSTEM, AND THAT THE SAFETY INSTRUCTIONS SUPPLIED WITH THIS OPERATOR AND THEIR IMPLEMENTATION ARE THE RESPONSIBILITY OF THE OWNER/END USER.**
5) **LEAVING THE INSTALLATION AND MAINTENANCE MANUAL FOR THIS OPERATOR AS WELL AS ANY ADDITIONAL SAFETY INFORMATION SUPPLIED WITH THIS OPERATOR OR OTHER COMPONENTS OF THE GATE SYSTEM WITH THE OWNER/END USER.**
6) **NOT PLACING IN SERVICE THIS OPERATOR IF YOU HAVE ANY QUESTIONS ABOUT THE SAFETY OF THE GATE OPERATING SYSTEM. CONSULT THE OPERATOR MANUFACTURER.**

THE CONCRETE OPERATOR PAD

Installation requires the presence of a suitable concrete pad as a base for the operator. The dimensions of this pad should be sufficient to allow at least 5" of clearance from each edge of the pad to the nearest operator mounting hole. The top of the pad should be 3" above grade to raise the operator above any standing water, while the depth of the pad below grade is dependent on the weight and size of the gate and the soil conditions at the site of the installation, also consult your local building codes. The RSX1000 cover is 34" high and is removed by lifting it vertically off the operator. THE SITE FOR THE OPERATOR SHOULD BE CHOSEN WITH AT LEAST 35" OF CLEARANCE ABOVE THE TOP OF THE UNIT.

If no suitable concrete base exists, a pad must be poured. See Figures 5 and 6 for plans for this pad. **Consult local building codes for depth of base.** Typical depths range from 24 to 36 inches. In either case, if vehicles are going to be operated in the vicinity of the operator, consider installation of protection bollards in front of the operator.

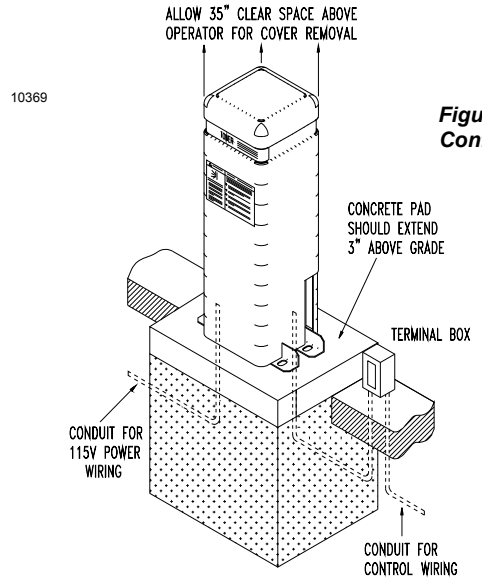

Figure 5: Pad Configuration

Figure 6: Operator Footprint

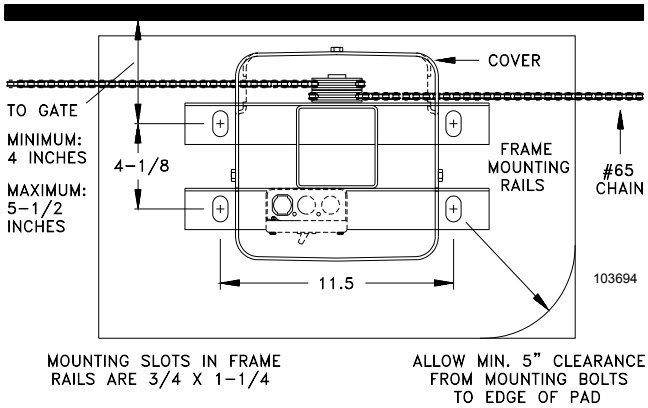

Figure 7: Service Conduits

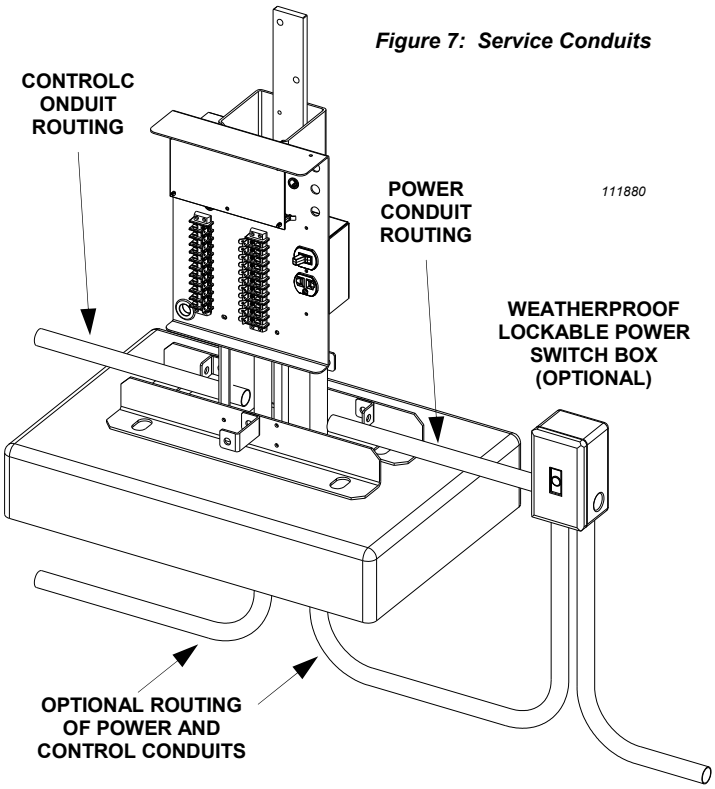

ELECTRICAL POWER REQUIREMENTS

NOTE: Before connecting the operator, use a voltmeter to insure that the electrical service is 230 VAC. Connection to a higher or lower VAC service is the most common cause of board failure in new installations and is NOT covered by the warranty.

The RSX1000 requires a 3-wire (Hot, Common, Ground), 230 VAC, electrical circuit with a 15 Amp breaker for proper operation. ***In installations with more than one operator, each operator must have a separate service from the breaker panel.*** Powering multiple operators from the same service can result in having to "de-sensitize" the obstruction sensing adjustment to prevent one operator from overloading the other. The electrical hookup is made in the junction box located in the right front corner of the frame. See Figure 7.

The AWG wire size for the electrical service depends on the distance of the operator from the breaker panel. **Refer to the table below to determine the correct wire size.** The NOMINAL column is the ideal distance from the breaker panel to the operator for a given wire size.

WIRE SIZE	NOMINAL DISTANCE
#14	100’
#12	150’
#10	250’
#8	400’
#6	600’
#4	1000’
#2	1600’

WARNING!

AVOID ELECTROCUTION:
Do not route low voltage wires in the same conduit as high voltage wires. Follow all local electrical codes or the National Electric Code.

The distances shown in the MAXIMUM column should never be exceeded. For distances greater than 3200', it is recommended that your local utility be contacted to install a service feeder for the installation.

Wiring from external controls such as guard shack, telephone entry, keypad or card reader systems should be brought to the operator by a conduit separate from the 230 VAC electrical hookup. Low voltage control wires MUST NEVER be routed in the same conduit as A.C. power wires. **ALWAYS CONSULT AND FOLLOW ALL LOCAL ELECTRICAL CODES.**

WARNING!

RISK OF ENTRAPMENT
VEHICLE DETECTOR LOOPS WILL NOT DETECT SMALLER VEHICLES SUCH AS MOTORCYCLES, GOLF CARTS, BICYCLES, OR PEDESTRIANS. PHOTOELECTRIC DETECTORS, EDGE DETECTORS AND SEPARATE PEDESTRIAN ACCESS MUST BE INSTALLED.

PLACING THE VEHICLE DETECTOR LOOPS

Proper placement of vehicle detector wire loops is critical if the loops are to provide satisfactory, extended service. The most important considerations are: 1) Proper wire type and, 2) Good, tight connections from the loop to the loop terminating connector. When a "Stand Alone" vehicle detector is used, the detection loop is connected to the wire harness on the detector itself. (See WIRING VEHICLE DETECTORS, Page 14.)

The RSX1000 provides for connecting the output of two loop systems: 1) A “reversing” loop that will prevent the gate from closing on a vehicle that has stopped in the path of the gate and 2) A “free exit” loop that will open the gate by detecting a vehicle which is inside the gated area and wishes to leave. If “free exit” detection is not desired, this loop will not be needed. Note the "reversing” loop is normally made up of two independent loop layouts connected to one detector. See Figure 8.

Two different types of installations will usually be encountered: 1) If the driveway material is already in place, saw cuts will be needed to accommodate the loop wires.

2) For loops where the paving material will be installed after the loop is positioned, it is necessary that the loop wires be placed in Schedule 40 PVC pipe to maintain uniform loop spacing with respect to the surface of the pavement. The loop should be placed 1.5 inches below the surface of the pavement and at least 2" above any reinforcing steel The lead in wires need not be in PVC, but must have at least six (6) twists per running foot.

For a saw-cut installation, observe the method recommended in Figure 9 for the corners. When installing a two-loop reversing system it is best to bring the twisted lead wires from each loop to the operator so that the loops may be properly phased. The saw cut must be to a depth of 1.5 inches, clean and with no sharp corners. After placing the wires, it is essential that the wires be held tightly in place by the foam backing and that no voids exist that can collect water which might freeze and push the loop wires out of the slot. The sealant used should match the paving material and should not be hard setting. The lead in wires must have at least six (6) twists per foot.

NO SPLICES ARE ALLOWED IN THE LOOP OR THE LEAD IN WIRE TO THE FIRST JUNCTION BOX Above ground splices may be used providing the wire is twisted, soldered and moisture sealed. For best long term results, do not use wire nuts anywhere in the loop system. For connections to the loop detector, gas tight crimp type terminals should be used, and soldered if possible.

THE WIRE USED FOR THE LOOPS MUST BE HEAT AND WATER RESISTANT. CROSS-LINK POLYETHYLENE INSULATED, TYPE XLPE OR RHW IS BEST. U.S.E. IS ALSO SATISFACTORY. DO NOT USE PVC INSULATED WIRE. WIRE SIZE SHOULD BE #16 GA STRANDED OR LARGER.

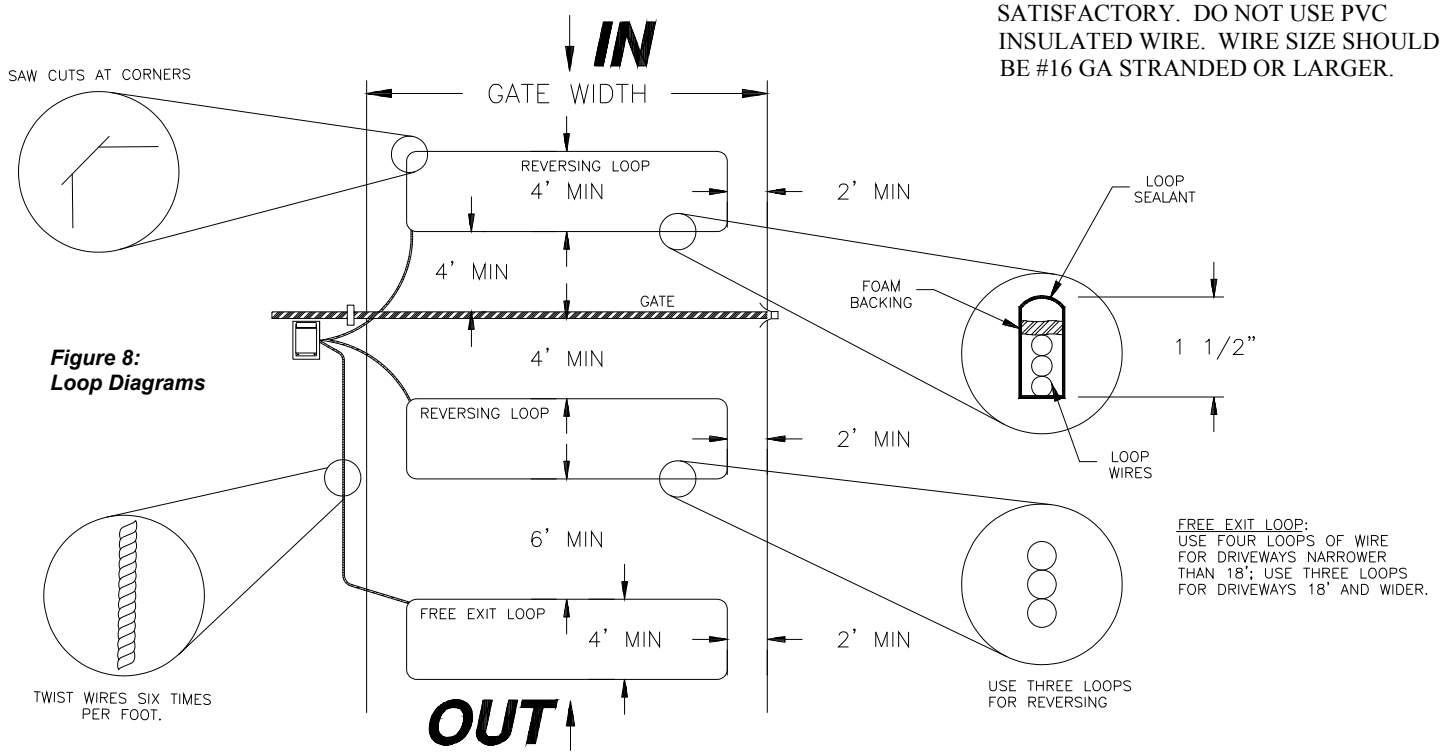

Figure 8: Loop Diagrams

TOOLS REQUIRED

The following tools and materials are required for proper installation of the operator:

1. Two 3/4" wrenches. (For tightening hex nuts on the chain take-up bolts.)
2. Chain cutting tool. (For adjusting chain length.)
3. Wire cutter, stripper and crimping tools. (For attaching accessory equipment to the control/mechanical unit enclosure terminal strip.)
4. Standard screwdriver. (For junction box face plate.)
5. Phillips head screwdriver.
6. Electric arc welder or an electric drill with a 3/8" bit. (For attaching chain brackets to gate.)
7. Several feet of 18 AWG or 22 AWG insulated multi-strand electrical wire. (For attaching accessory equipment to the control/mechanical unit enclosure terminal strip.)
8. Four 3/8" or 1/2" expansion anchor bolts with hex nuts, flat washers and lock washers. (For attaching the operator to the concrete pad.)

UNPACKING CHECKLIST

The following is a check list of the various parts included with the Tower Plus RSX1000 operator:

1. (1) Tower Plus RSX1000 Slide Gate Operator w/Cover
2. (2) Gate Warning Signs
3. (2) Chain Brackets
4. (1) Chain Take-up Bolt Kit
5. (16) Feet of #65 Chain
6. (1) Installation Manual

ATTACHING THE CHAIN BRACKETS and PLACING THE RSX1000 OPERATOR

The chain brackets provided with the RSX1000 operator should be mounted on the the gate with the centerline of the slot 8" above the top of the operator pad. You will normally require a welder or an electric drill with a 3/8” bit to attach the chain bracket to the gate. See Figures 9 and 10.

From the center of the slot in the bracket, run a string line taught from one chain mounting bracket to the other. Place the operator on the new pad or existing concrete base and position the unit so that the string is centered on the primary drive sprocket, centered on the pad from left to right, and parallel with the gate frame as shown in Figure 10a. Also employ Figure 6, page 6 as a guide. Using the operator as a template, mark and drill the appropriate holes for the required anchor bolts (four [4] ½” anchor bolts are required).
Install the anchor bolts per the bolt manufacturers instructions.

Re-sit the operator over the anchor bolts,

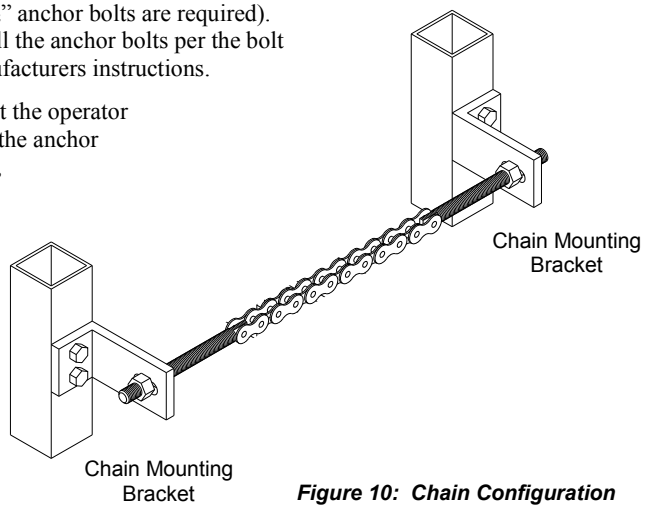

Figure 10: Chain Configuration

NOTICE: The Tower Operator cannot utilize a back drive chain configuration.

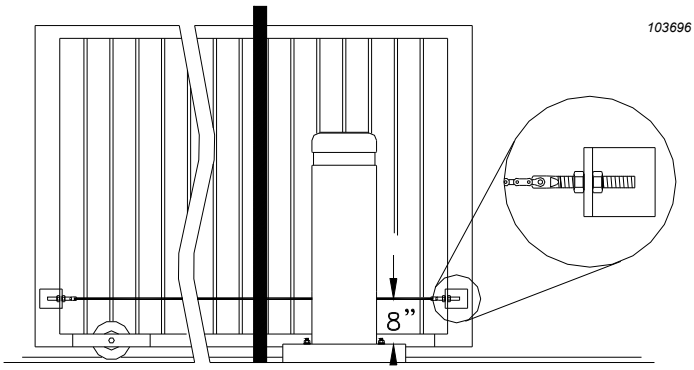

Figure 9: Chain Configuration

making sure the operator is sitting level. If any corners of the operator are resting above the pad, place flat washers as shims between the operator and concrete pad (around the anchor bolts). Place the flat washers, lock washers and nuts on the anchor bolts and tighten down the operator securely.

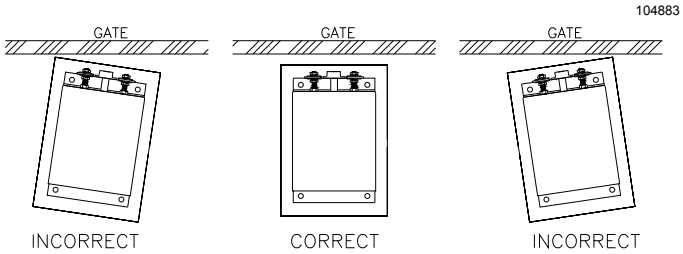

Figure 10a: Parallel Placement

Attach one end of the chain to the gate and thread the other end through the idler pulleys and drive sprocket. Attach the free end to the bracket on the opposite end of the gate and tension the chain. See Figures 6, 9 and 10.

Do not over-tension the chain.

WARNING!

RISK OF ELECTROCUTION
DO NOT BEGIN THE ELECTRICAL CONNECTION PROCEDURES UNTIL THE POWER IS TURNED OFF AT THE CIRCUIT BREAKER

ELECTRICAL HOOKUP

The operator requires a 3-wire, 230 VAC electrical hook-up for proper operation. Ideally, the conduit containing the hook-up wires should exit the concrete pad under the operator. There is a 2" x 2-3/4" gap on either side of the operator pedestal for this purpose. Run flexible conduit from the point where the conduit exists the pad and attach it to the bottom of the junction box on the frame. Review Figure 7, page 6. If the hook-up exits the pad external to the operator, drill a small hole in the operator pedestal and use a conduit clamp to secure the conduit to the pedestal. Cut a small slot in the skirt around the base of the cover. This will allow the cover to fit down flush with the conduit in place.

Remove the junction box face plate. Using the wire nuts provided, attach the three lead wires to the electrical hookup wires in the following manner:

1. The BLACK wire attaches to the 230 VAC HOT wire.
2. The WHITE wire to the 230 VAC NEUTRAL wire.
3. The GREEN wire to the GROUND wire.

NOTE: The RSX1000 control board comes equipped with a built-in surge protection which MAY prevent damage to the controller board in the event of a nearby lightning strike or a surge in the power lines. For the surge protector to function, and as a general precaution, the operator must be properly grounded. The third wire for the ground must be installed .

WARNING!

IMPROPER WIRING COULD CAUSE ELECTROCUTION OR DAMAGE TO CIRCUITRY. FOLLOW THE NEC AND ALL LOCAL BUILDING AND ELECTRICAL CODES.

ADDITIONAL LIGHTNING PROTECTION

For those areas where a high probability of ground lightning strikes exists (Florida, Georgia, etc.), additional lightning protection should be installed in the RSX1000. Although it may not be possible to protect against all strikes, additional protection will substantially reduce the occurrence of lightning damage. Allstar's lightning data indicates that the most strikes enter the RSX1000 through the power lines. Effective protection requires that the surge current from the lightning strike be shunted to ground. This must be done without raising the potential of

WARNING!

TO REDUCE THE RISK OF DAMAGE DUE TO LIGHTNING, ENSURE A SOLID GROUND FROM THE TOWER GROUND WIRE IN THE SERVICE ENTRANCE BOX TO THE ELECTRICAL SERVICE GROUND OR TO A EARTH GROUND STAKE NEAR THE RSX1000.

the circuitry in the RSX1000, with respect to ground, to the levels that will damage the solid state circuitry. Lightning strikes generate enormous currents for very short periods of time. Unfortunately, the period of time is long enough to damage solid state components and many times, other components. The key to success is a very low resistance path from the surge protector to ground for these currents in addition to a surge protector that will act fast enough to protect the solid state circuitry. Several manufacturers offer suitable surge protectors.

CONTROL & ACCESSORY EQUIPMENT WIRING

NOTE: Before continuing review the PRE-INSTALLATION NOTES on page 3 and the GATE SYSTEM DESIGN/ INSTALLATION PARAMETERS on pages 4 and 5 with respect to the application and likelihood of pedestrian traffic.

THE MANUFACTURER ADVISES THAT AS THE RSX1000 OPERATOR IS A CLASS I VEHICULAR GATE OPERATOR AND WHEN INSTALLED IN A RESIDENTIAL AREA WHERE THERE IS A LIKELIHOOD OF PEDESTRIANS IN THE AREA YOU MUST INSTALL PHOTOELECTRIC DEVICE(S), ELECTRIC GATE EDGE(S) OR OTHER DEVICE(S) TO PROTECT AGAINST ENTRAPMENT!

The manufacturer can provide either photoelectric device(s) or electric edge(s) depending on the application. Contact the factory and follow the installation instructions and warnings provided with the device.

All low voltage accessory equipment is hooked-up to the two 11 terminal strips located on the control panel mounted to the pedestal. See Figure 11.

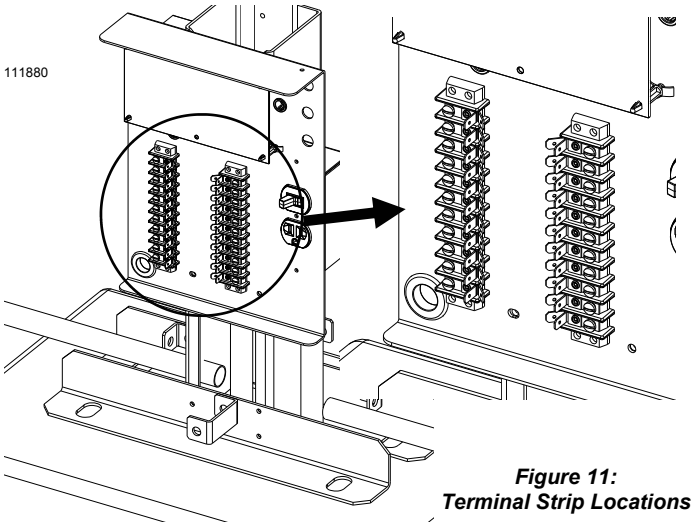

Figure 11: Terminal Strip Locations

C: INSTALLING THE OPERATOR

NO ACCESSORY EQUIPMENT SHOULD BE INSTALLED ABOVE THE POWER SWITCH HANDY BOX EXCEPT A SINGLE CONTACT RADIO RECEIVER!

If local electrical codes permit, use the operator's pedestal for mounting accessory components. Otherwise, install the accessory equipment in an appropriate electrical box.

The command inputs on the RSX1000 require a switch closure to COMMON of less than 100 OHMS resistance and for more than 100 milliseconds duration. To familiarize yourself with the input functions reference the Wiring Diagram on page 23 and the chart on Pages 19 and 20. A three push button station can be wired in to provide full control of all command functions.

WIRING A 3-BUTTON STATION

NOTE: Three button stations may be ordered with the STOP button as Normally Open (NO) or Normally Closed (NC). The RSX1000 will operate with a **NORMALLY OPEN** Stop button **ONLY**.

See Figure 12 for instructions on wiring a three button station.

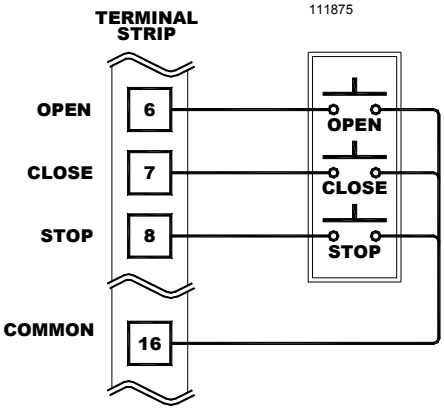

Figure 12: Wiring a Three Button Station
NOTE: Normally Open Stop Button

WARNING!

RISK OF ENTRAPMENT!
TO REDUCE THE RISK OF INJURY OR DEATH: LOCATE KEYPAD, CARD READER, KEY SWITCH OR SIMILAR ENTRY DEVICES IN A LOCATION WHERE A USER CAN NOT REACH THROUGH THE GATE OR FENCE TO ACTIVATE THE GATE OPERATOR. THE RECOMMENDED DISTANCE BETWEEN THE GATE OR FENCE AND ACCESSORY SWITCH IS 10 FEET.

BI-PARTING (MASTER/SLAVE) APPLICATION

Two RSX1000 units in a bi-parting situation (one wired right-hand and one wired left hand, see Figure 17, page 15) can be configured to operate in a synchronous manner two gate sections that make up a single gate. The units can be wired together to operate as one system, with one unit controlling the movement of both. Additionally, the installer can customize the installation of the external entrapment protection devices. These devices can be wired to the primary (controlling) operator or alternately to the individual units as the situation dictates or the end user requires.

When an external entrapment protection device is wired to the primary unit (such as would be recommended for a photoeye across the entire opening) both units will react to the detection of an obstruction, regardless of the location of the obstruction. An edge device (or similar) protecting an entrapment zone particular to say, the secondary unit, could be wired to that unit only and would react individually to the detection of an obstruction. Synchronous movement would resume once the obstruction is cleared and an open or close command is received by the primary operator.

Figure 13: Bi-Parting Wiring

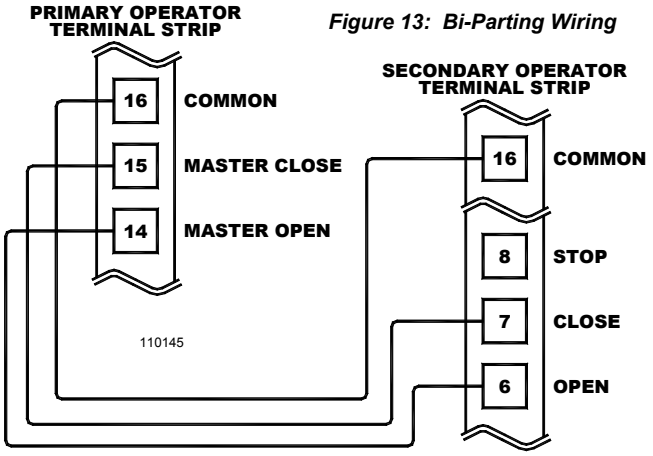

Choose one of the operators to be the Primary (Master) and the other to be the Secondary (Slave). Route all of the Control Wiring to the Primary operator first. This will prevent grounding loop problems which can occur when more than one COMMON or ground wire is attached between separate operators. All accessory equipment should be wired to the Primary operator.

To obtain Bi-Parting (Synchronous) operation (4 Steps):
1. Wire the Primary Operator Terminal #14 to Terminal #6 in the Secondary Operator, see Figure 13 above.
2. Wire the Primary Operator Terminal #15 to Terminal #7 in the Secondary Operator, see Figure 13 above.
3. Place the Master/Slave Jumper on the Primary Operator motor control board to the primary position. See Figure 13a, below.
4. Place the Master/Slave Jumper on the Secondary Operator motor control board to the secondary position. See Figure 13a, below.

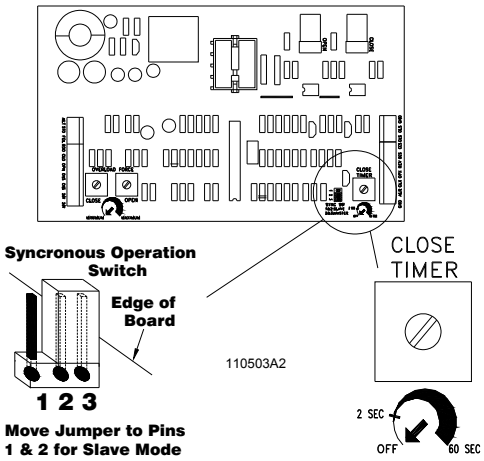

Figure 13a:

Location of Close Timer / Synchronous (Bi-Parting) Select Switch

WIRING AND SUGGESTED PLACEMENT OF OPTIONAL NON-CONTACT SENSOR (PHOTOELECTRIC) SECONDARY ENTRAPMENT PROTECTION DEVICES

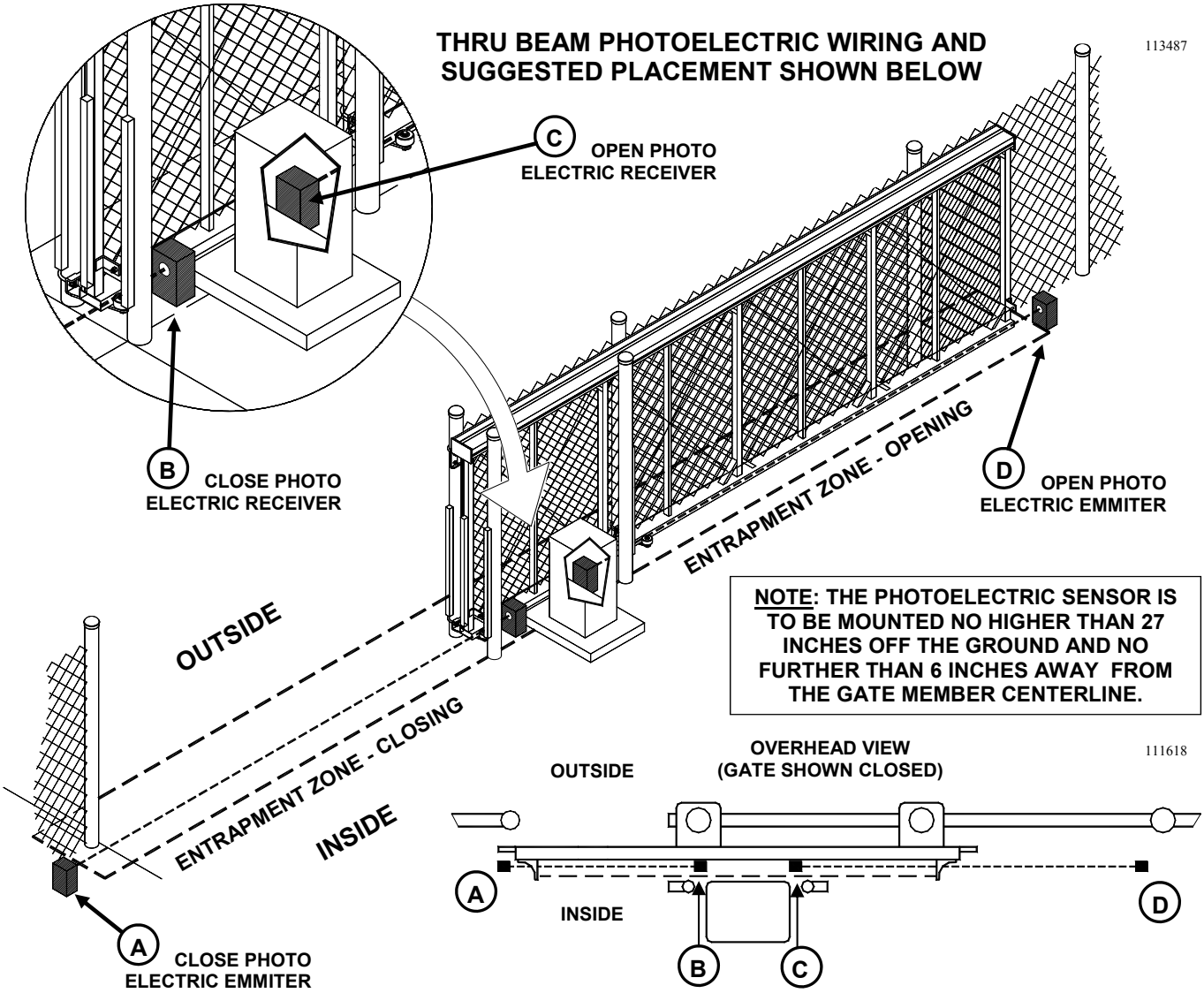

NOTE: THE PHOTOELECTRIC SENSOR IS TO BE MOUNTED NO HIGHER THAN 27 INCHES OFF THE GROUND AND NO FURTHER THAN 6 INCHES AWAY FROM THE GATE MEMBER CENTERLINE.

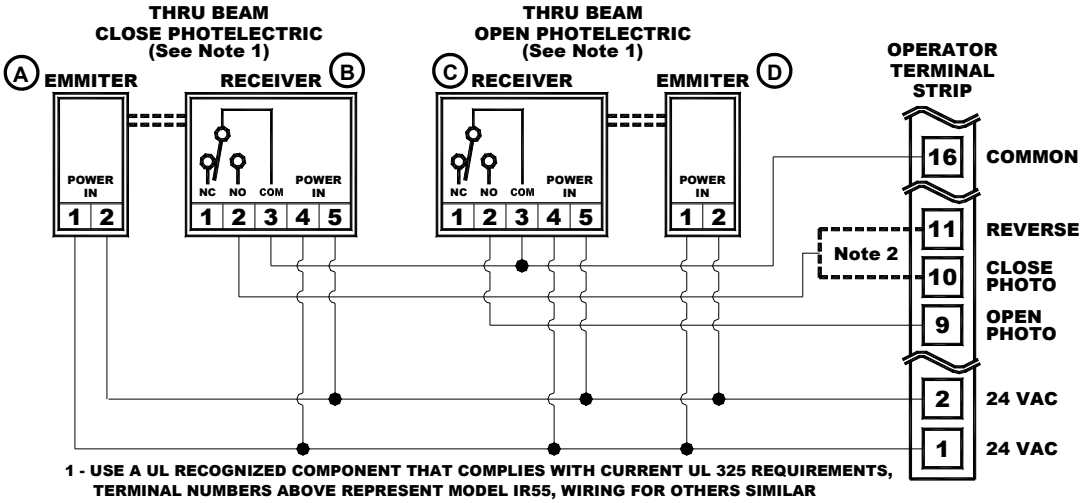

1 - USE A UL RECOGNIZED COMPONENT THAT COMPLIES WITH CURRENT UL 325 REQUIREMENTS, TERMINAL NUMBERS ABOVE REPRESENT MODEL IR55, WIRING FOR OTHERS SIMILAR

2 - SELECT TERMINAL BASED ON FUNCTION DESIRED, SEE TERMINAL STRIP REFERENCE CHART

WIRING AND SUGGESTED PLACEMENT OF OPTIONAL NON-CONTACT SENSOR (PHOTOELECTRIC) SECONDARY ENTRAPMENT PROTECTION DEVICES

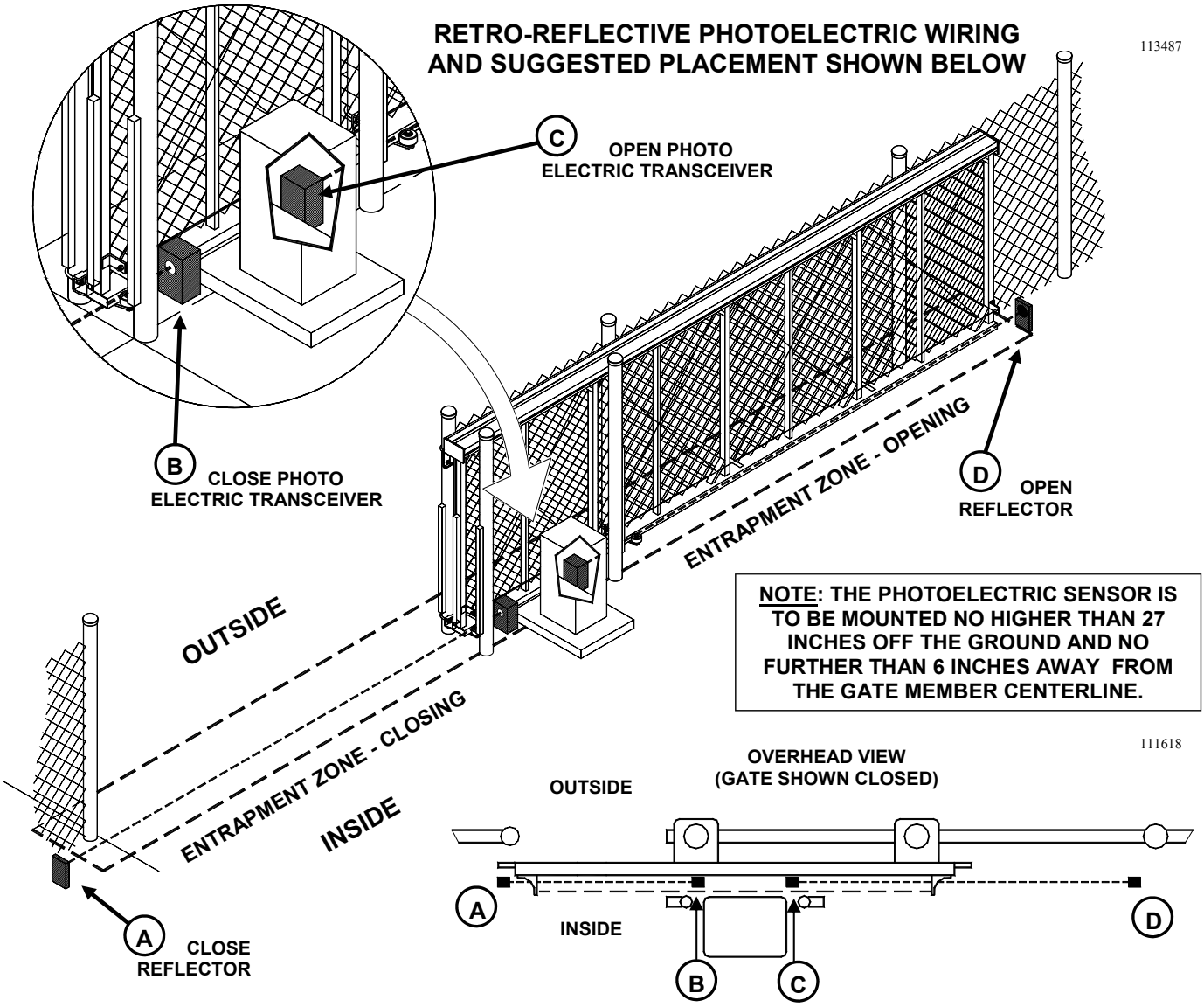

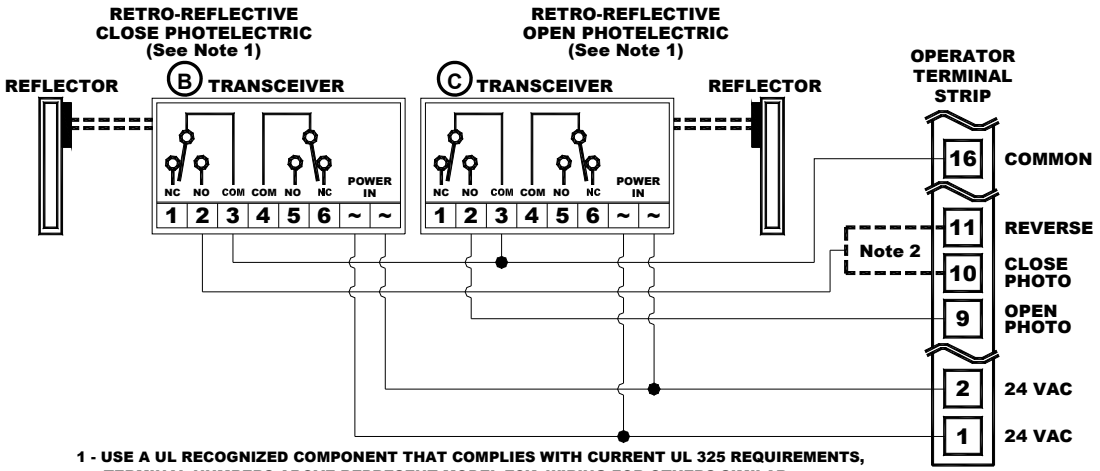

1 - USE A UL RECOGNIZED COMPONENT THAT COMPLIES WITH CURRENT UL 325 REQUIREMENTS, TERMINAL NUMBERS ABOVE REPRESENT MODEL E3K, WIRING FOR OTHERS SIMILAR

2 - SELECT TERMINAL BASED ON FUNCTION DESIRED, SEE TERMINAL STRIP REFERENCE CHART

WIRING AND SUGGESTED PLACEMENT OF OPTIONAL CONTACT SENSOR (ELECTRIC EDGE) SECONDARY ENTRAPMENT PROTECTION DEVICES

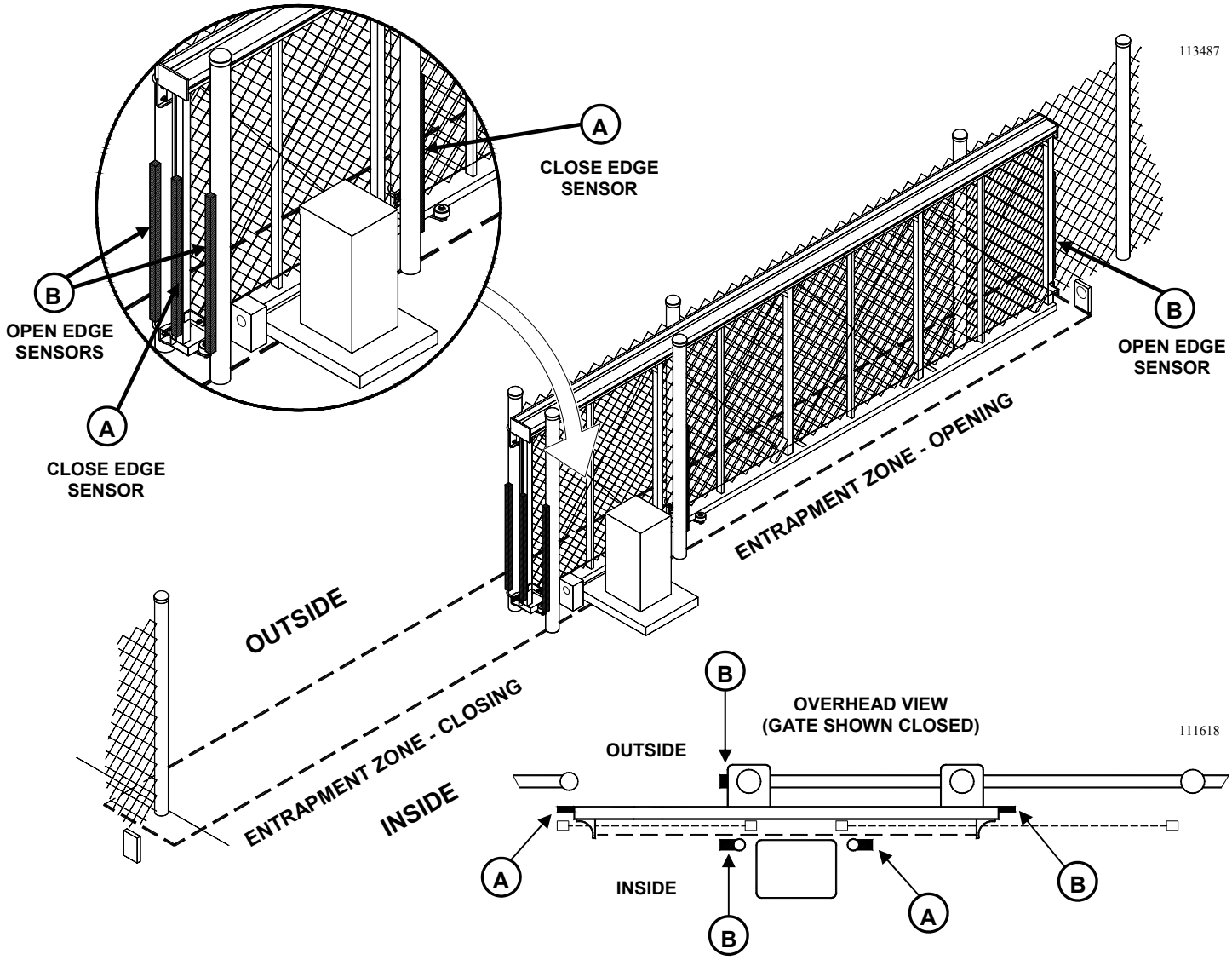

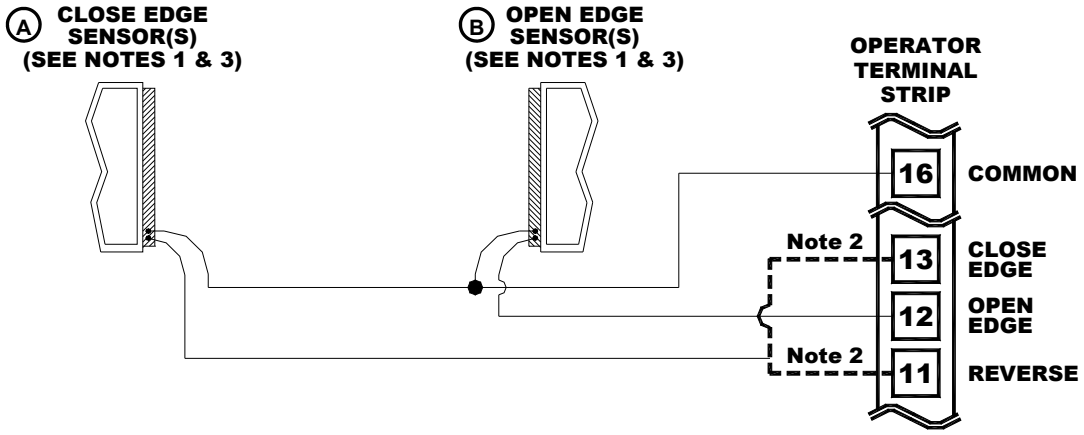

1 - USE A UL RECOGNIZED COMPONENT THAT COMPLIES WITH CURRENT UL 325 REQUIREMENTS, AN EDGE SENSOR THAT ACTIVATES ON THREE (3) SIDES SHOULD BE USED

2 - SELECT TERMINAL BASED ON FUNCTION DESIRED, SEE TERMINAL STRIP REFERENCE CHART

3 - MULTIPLE EDGE SENSORS MAY BE CONNECTED IN PARALLEL

WIRING VEHICLE DETECTORS

There are three connections that need to be made; 1) the AC power to the vehicle loop detector module, 2) the control connection ("Presence" or "Relay" output of the vehicle loop detector module) to the RSX1000, and 3) the connections to the actual loop. All these connections will be made at the vehicle loop detector modules (provided by others). Follow the wiring instructions provided by the vehicle detector manufacturer. Connect the actual loops to the vehicle loop detector modules as shown in Figure 14. If two reversing loops are used to detect vehicles in the path of the gate wire them in series as shown in Figure 14a.

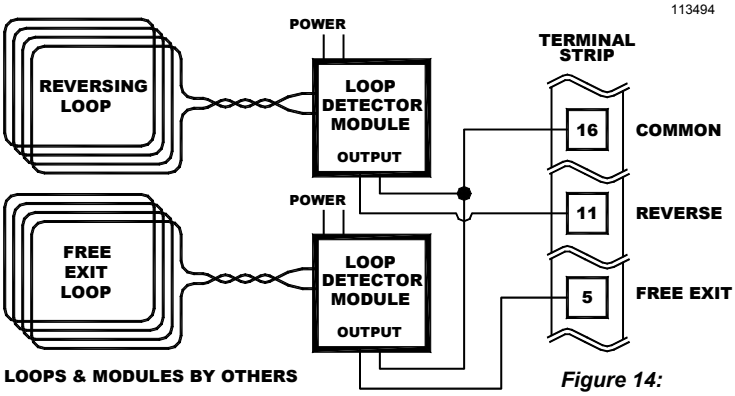

Figure 14: Loop Wiring

VEHICLE DETECTOR POWER

Vehicle detector modules may be ordered for various AC Voltages, consult the Loop Detector Module manufacturer . The voltage required may be obtained from same electrical service box as the RSX1000 operator .

WIRING A VEHICLE DETECTOR TO THE RSX1000

For a REVERSING LOOP connection of the vehicle loop detector module, the "relay" or "presence" output of the loop detector module will be connected to Terminal #11 (REV LOOP) of the RSX1000 and the COMMON wire will be connected to Terminal #16 (COMMON) of the RSX1000, see Figure 14. As long as a relay closure is present on these two lines, the RSX1000 will not allow the gate to close. If the gate is opening, the gate will continue to open. If the signal is removed before the Timer to Close times out, the gate will close after the Timer to Close has completed its cycle.

For a FREE EXIT loop connection of a vehicle loop detector module, the RELAY or PRESENCE output signal will be connected to Terminal #5 (FREE EXIT) and the RELAY COMMON signal connected to Terminal #16 (COMMON) of the RSX1000, see Figure 14. DO NOT CONNECT THE FREE EXIT OUTPUT SIGNAL TO ANY OTHER TERMINAL, SUCH AS RADIO RELAY, BECAUSE THE GATE WILL CLOSE AFTER REACHING THE OPEN LIMIT

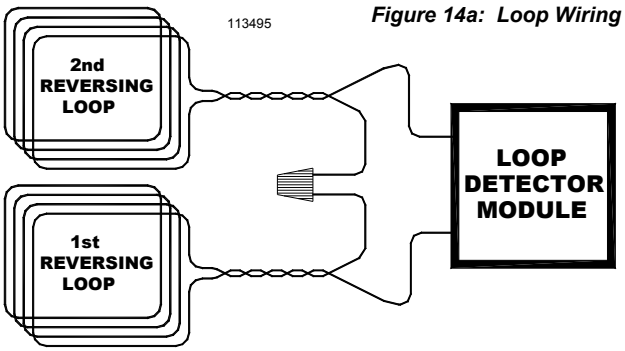

Figure 14a: Loop Wiring

CAUTION !

USE THE OPERATOR 24 VAC CONNECTIONS TO POWER A RADIO RECEIVER ONLY. POWERING ANY OTHER ACCESSORY DEVICE FROM THE OPERATOR MAY RESULT IN DAMAGE TO THE POWER TRANSFORMER IN THE OPERATOR.

AND THE TIMER TO CLOSE HAS COMPLETED ITS CYCLE, EVEN THOUGH THE VEHICLE HAS NOT EXITED THE FREE EXIT LOOP.

WIRING RADIO RECEIVERS

THREE TERMINAL RECEIVERS

If a three wire receiver is to be used, the #1 terminal of the receiver is normally COMMON to both the auxiliary transformer (power input) and the radio relay. Most radio manufacturers label this terminal as 24 VAC. Connect a wire from the #1 terminal of the radio receiver to terminal #1 on the operator. The #2 terminal of the radio receiver is normally the relay contact of the receiver. Connect a wire from this #2 terminal of the radio receiver to the #4 terminal (RADIO OPEN) or #3 terminal (ALTERNATE) of the RSX1000 control panel. The choice of Radio Open or Alternate is determinate on the function desired, review the Reference Chart on pages 12 and 13. The #3 terminal of the radio receiver is usually labeled RADIO POWER and is connected to 24 VAC. Connect to terminal #2 of the RSX1000 control panel.

FOUR WIRE RECEIVERS

Four wire receivers replace the "spade" terminals on the RECEIVER with 4 wires. These wires are typically color coded. The instructions with the receiver must be carefully followed to properly connect the receiver. For any 4 wire receiver, two of the wires will be for power input and two will be for the relay contacts. Connect the two wires for the power input to each side of the 24 VAC RSX1000 terminals #1 and #2. Connect one of the two wires for the relay to terminal #16 (COMMON) and the other wire to #4 terminal (RADIO OPEN) or #3 terminal (ALTERNATE) of the RSX1000 control panel. The choice of

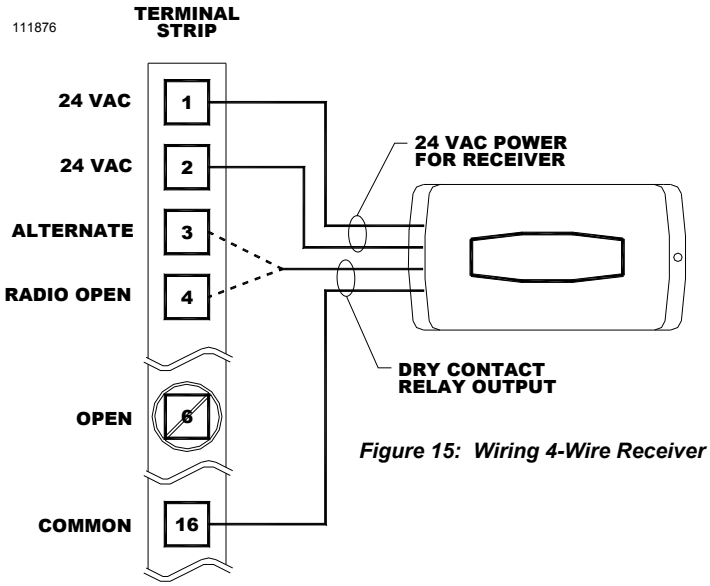

Figure 15: Wiring 4-Wire Receiver

Radio Open or Alternate is determinate on the function desired, review the Reference Chart on pages 19 and 20. See Figure 15 for connecting a 4 wire receiver.

WIRING A KEYPAD, CARD READER OR TELEPHONE ENTRY SYSTEM

These devices activate the RSX1000 by a relay contact closure within the device. Typically, two wires or terminals are provided by the device to operate the gate. Follow the manufacturers instructions on locating these connections. If one of the connections at the device is labeled as COMMON, then connect this to Terminal #16 of the RSX1000 control panel. Connect the other contact to Terminal #5 (FREE EXIT). If no identification of the connections is noted at the device, then the two wires may be connected to terminal #16 and Terminal #5 (FREE EXIT) in any order. See Figure 16 below.

Keypads, Card Readers and Telephone Entry Systems are typically located remotely from the RSX1000. The wiring used is low voltage CLASS 2. Be sure to run an independent conduit for this wiring from the entry device to the RSX1000. The wire size should be 16 or 18 AWG stranded wire for ease of handling.

Figure 16: Wiring an Access System

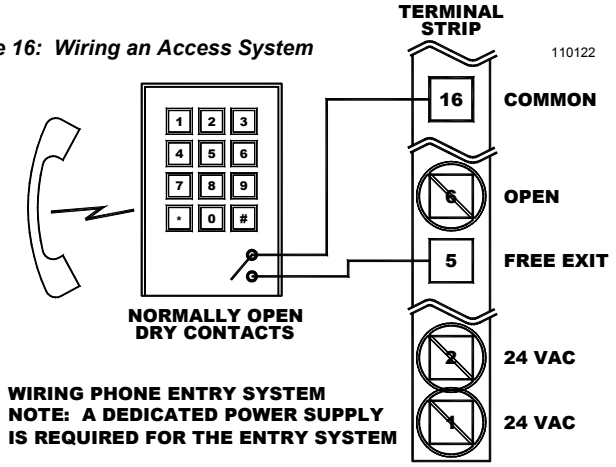

WARNING!

RISK OF ENTRAPMENT!
TO REDUCE THE RISK OF INJURY OR DEATH: LOCATE KEYPAD, CARD READER, KEY SWITCH OR SIMILAR ENTRY DEVICES IN A LOCATION WHERE A USER CAN NOT REACH THROUGH THE GATE OR FENCE TO ACTIVATE THE GATE OPERATOR. THE RECOMMENDED DISTANCE BETWEEN THE GATE OR FENCE AND ACCESSORY SWITCH IS 10 FEET.

Figure 17: Left Hand vs. Right Hand Installation

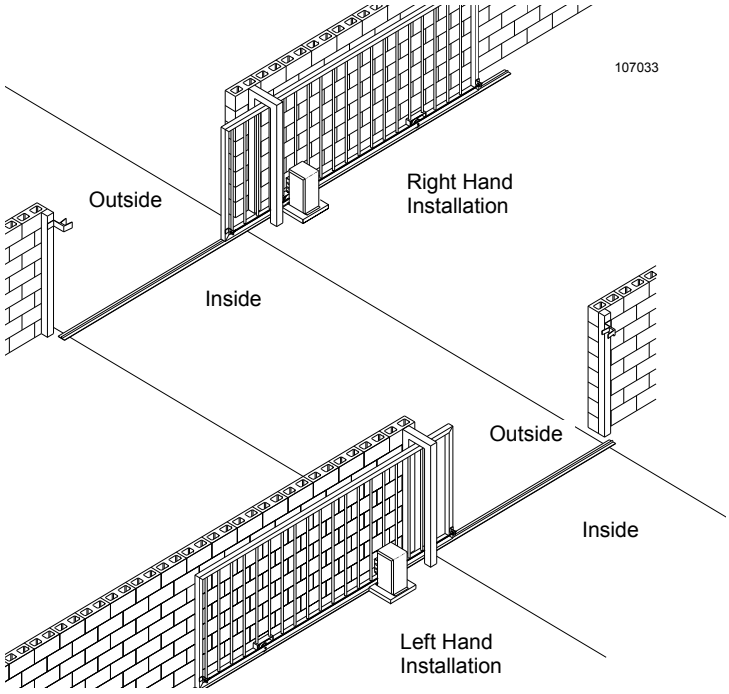

RIGHT HAND AND LEFT HAND INSTALLATION

The RSX1000 operator is wired at the factory for **RIGHT HAND** operation. Right hand operation is described as the gate sliding to the right to open and where the operator is mounted to the right of the gate opening - both as you look at the installation from the inside (secured side). See Figure 17 for a pictorial example of a right hand operation.

Left hand operation is described as the gate sliding to the left to open and where the operator is mounted to the left of the gate opening - both as you look at the installation from the inside (secured side). Also see Figure 17 for a pictorial example of a left hand operation.

Note the different wiring configurations for right-hand installations and left-hand installations (see Figures 18 and 19). To change to a different handed operation the capacitor wires and limit wires must be changed. For proper operation, the capacitor and limits must be wired as shown.

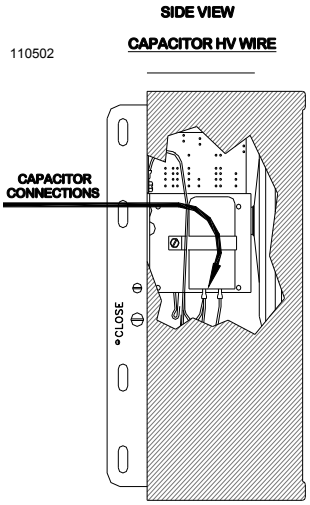

Figure 18: Left Hand Conversion Harness & Wire Locations

Locate the capacitor wire connections as shown in Figure 18. On one capacitor terminal post there is a **RED** wire from the motor and a **RED** wire from the high voltage wire harness and on the other capacitor terminal post there is a **BLUE** wire from the motor and a **BLUE** wire from the high voltage wire harness. Trace and identify the **RED** and **BLUE** wires which originate at the motor. **SWITCH THESE WIRES** such that the **RED**

110501 REV B

Figure 19: Limit Cam Mounting & Limit Switch Wiring

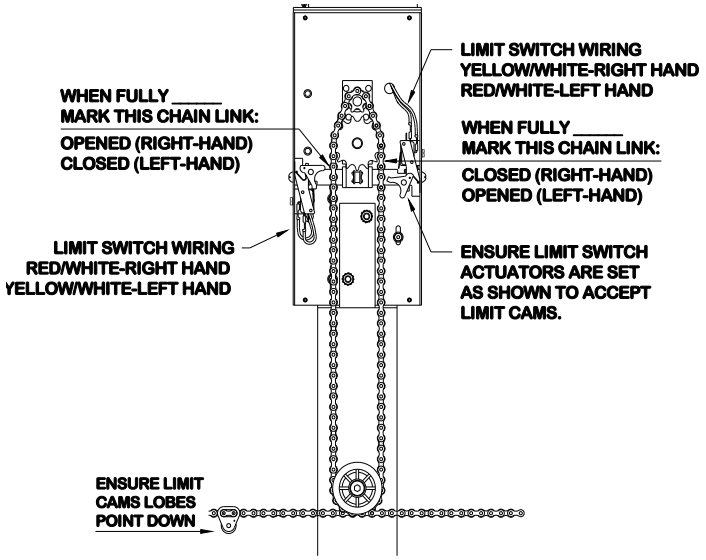

motor wire is on the capacitor terminal post with the **BLUE** wire from the high voltage wire harness **AND** the **BLUE** motor wire is on the capacitor terminal post with the **RED** wire from the high voltage wire harness. The high voltage wire harness is now configured for left-hand operation. Left-hand conversion is now complete.

Locate the limit switches as shown in Figure 19. As shipped from the factory the switches are wired for right hand operation (red/white on the lower switch and yellow/white on the upper switch). To reconfigure the limit switches for left hand operation reroute the yellow wire to the lower switch and the red wire to the upper switch. The limit switches are now configured for left-hand operation.

MOUNTING THE LIMIT CAMS

Before turning on the main power, the limit cams must be mounted to the chain in their approximate positions. See Figures 19 and 20. Figure 19 illustrates a view of the RSX1000 Control Box/Mechanical Unit that faces the gate which depicts the Output Drive Sprocket components.

Figure 20 shows how to install the Limit Cams to the chain. **NOTE: IT IS IMPORTANT TO INSTALL THE CAMS AROUND THE WHOLE LINK AS ILLUSTRATED AND WITH THE STUD/NUT IN THE PROPER ORIENTATION AS OUTLINED IN THE FOLLOWING PARAGRAPHS.**

Manually push the gate all the way open. As depicted in Figure 19 locate and mark with chalk the proper chain link (depending on Right-Hand or Left-Hand operation) for **OPEN** Limit operation.

110501A2

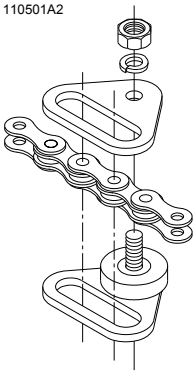

Figure 20: Mounting Limit Cams to Chain

Manually push the gate all the way closed. Following the procedure shown in Figure 20, mount the Limit Cam on the chain link that was marked with chalk in the previous step, the link should now be parallel with the ground and approximately 4 to 5 feet from the end of the gate. **The cam MUST BE mounted such that the lobe is DOWN (TOWARD THE GROUND).**

NOTE: IF RIGHT-HAND OPERATION (STANDARD) MOUNT THE CAM WITH THE STUD/NUT POINTING AT THE GATE, IF LEFT-HAND OPERATION MOUNT THE CAM WITH THE STUD/NUT POINTING AWAY FROM THE GATE.

As depicted in Figure 19 locate and mark with chalk the proper chain link (depending on Right-Hand or Left-Hand operation) for **CLOSE** Limit operation.

At this time recheck the Toggle Limit Switch **ACTUATORS** for proper positioning to accept the limit cams. See Figure 19.

Manually push the gate all the way open again. Following the procedure shown in Figure 20, mount the Limit Cam on the chain link that was marked with chalk in the previous step, the link should now be parallel with the ground and approximately 4 to 5 feet from the end of the gate. **The cam MUST BE mounted such that the lobe is DOWN (TOWARD THE GROUND).**

NOTE: IF RIGHT-HAND OPERATION (STANDARD) MOUNT THE CAM WITH THE STUD/NUT POINTING AWAY FROM THE GATE, IF LEFT-HAND OPERATION MOUNT THE CAM WITH THE STUD/NUT POINTING AT THE GATE.

NOTE: ENSURE THAT WHEN THE CAMS ENTER THE LOWER IDLER SPROCKETS THEY ARE ORIENTED PROPERLY AS FOLLOWS: WHEN THE CAM ROUNDS THE INSIDE SPROCKET (CLOSEST TO THE PEDESTAL) ITS STUD/NUT SHOULD BE POINTING TOWARDS THE PEDESTAL, WHEN THE CAM ROUNDS THE OUTSIDE SPROCKET (FARTHEST FROM THE PEDESTAL) ITS STUD/NUT SHOULD BE POINTING AWAY FROM THE PEDESTAL.

The limit cams are now roughly adjusted. If the gate should stop short of fully opened or closed, or if it bangs against the end stops during operation, the limit cams can be fine-tuned after the operator is powered up. (See **FINAL SETTING OF THE LIMIT CAMS**, page 18)

WARNING!

RISK OF ELECTROCUTION
DO NOT BEGIN TO SET OR RESET THE FOLLOWING ADJUSTMENTS UNTIL THE POWER IS TURNED OFF AT THE MAIN POWER SWITCH

WARNING!

RISK OF ELECTROCUTION
DO NOT BEGIN TO SET OR RESET THE FOLLOWING ADJUSTMENTS UNTIL THE POWER IS TURNED OFF AT THE MAIN POWER SWITCH

PRESETTING THE OBSTRUCTION DETECTION / SENSITIVITY

The operator is equipped with an obstruction detection circuit which will detect MOST obstructions in the gate's path. See Figure 21. The sensitivity can be independently adjusted for OPEN and CLOSE with the potentiometers on the controller board labeled, "OVERLOAD FORCE". Turning a potentiometer clockwise decreases the sensitivity and turning it counterclockwise increases the sensitivity.

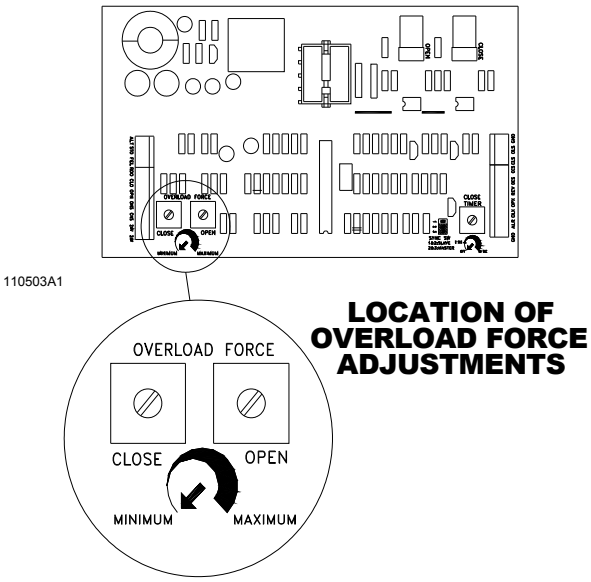

Figure 21: Location of OL Force Adjustments

The RSX1000 is shipped from the factory with the potentiometers at their most sensitive setting. Turn the potentiometer 1/4 turn clockwise to prevent the overload circuit from tripping due to the gate's inherent friction.

(See FINAL SETTING OF THE OBSTRUCTION DETECTION SENSITIVITY, Page 18)

TIMER TO CLOSE SETTING

The Timer to Close is controlled by the setting of the "AUTO CLOSE TIMER" potentiometer on the control board, see Figure 22. When the pot is adjusted fully counter-clockwise the Timer-To-Close is disabled. Turning the pot approximately 1/4 turn clockwise will enable the Timer To Close function with a delay of approximately 2 seconds between the gate reaching the full open position and automatically closing. To increase the time delay continue to turn the pot in the clockwise direction to a maximum delay of 60 seconds (one minute).

IT IS HIGHLY RECOMMENDED THAT AUXILIARY ENTRAPMENT PROTECTION DEVICES BE INSTALLED WHENEVER THE TIMER TO CLOSE OPTION IS ENABLED.

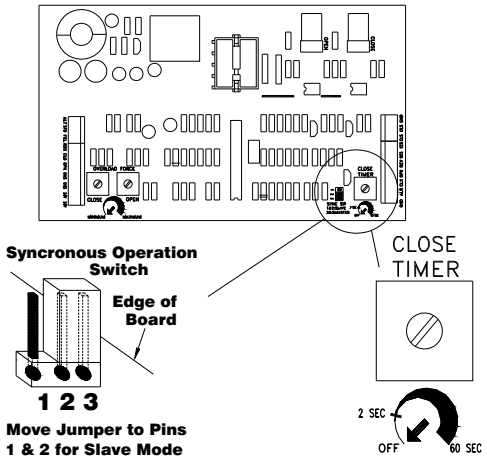

Figure 22: Location of Timer / Sync Select Switch

LOCATION OF AUTOCLOSE TIMER ADJUSTMENT AND SYNCRONOUS OPERATION SWITCH

FINAL INSTALLATION CHECKLIST

1. **Use a voltmeter to assure the service voltage to the operator is 230 VAC. Connection to an improper VAC service is the most common cause of board failure in new installations and is NOT COVERED BY WARRANTY!**
2. **No accessory equipment is installed in the control box.**
3. **All wires attached to the 11 position terminal strips are well clear of the moving parts under the unit cover.**

D: STARTING THE OPERATOR

4. **The junction box cover is securely fastened .**

PRE POWER-ON CHECKLIST

The following checklist should be used before turning on power to the operator:

1. THE VOLTAGE TO POWER THE UNIT IS 115 VOLTS AC
2. The proper Left- or Right-hand Mode has been selected;
3. The Limit Cams have been mounted to the chain;
4. The Overload Sensitivity has been preset.

When the **PRE POWER-ON CHECKLIST** has been completed, turn on the main power switch located on the control panel next to the Control Wiring Terminal Strips, see Figure 11. Give the operator a push button input command with a jumper wire attached to terminal **#16**, **COMMON**, on the terminal strip and touched briefly to terminal **#3**, **ALTERNATE** to **START** the gate. If the gate was fully open, as left in the previous step "**MOUNTING THE LIMIT CAMS**" the gate will start in a close direction. If the gate was in **any other position but fully open**, the gate will start in the open direction.

Give the operator an **ALTERNATE** input command. The operator should stop if **OPENING or CLOSING**. A subsequent

ALTERNATE input command will cause the gate to begin moving in the opposite direction. See BASIC OPERATIONAL GUIDE page 22.

FINAL SETTING OF THE LIMIT CHAIN CAMS

If the gate stops short of being fully open or closed or if it bangs against the end stops, turn off the main power and move the appropriate limit chain cam. Each whole link on the chain represents about 1" of gate travel. The cams should only have to be moved one or two whole links in either direction to fine tune the gate's limits of travel. When final adjustment has been completed, insure that the cam nuts are properly tightened. Review Figure 19 & 20.

WARNING!

RISK OF ENTRAPMENT.
THE SENSITIVITY ADJUSTMENT MUST BE SET MORE PRECISELY PRIOR TO COMPLETING THE OPERATOR INSTALLATION

FINAL SETTING OF THE OPERATOR SENSITIVITY

The obstruction detection sensitivity was preset before turning on the main power to prevent the operator from "self-tripping" during testing. To set the OPEN sensitivity, start the gate in motion in the Open direction and turn the overload potentiometer counterclockwise until the gate stops and reverses. Then back the potentiometer off 10 degrees in the clockwise direction. Review Figure 21, Page 17.

Repeat for the Close sensitivity.

CAUTION: During this process the alarm will sound if the overload sensor is activated two sequential times before the gate reaches a limit (open or close). To reset the alarm sensor use constant pressure on a control button connected to the OPEN or CLOSE input and move the gate to a fully open or closed position or turn off and restore the power to the operator.

Restart the gate and give the leading edge a firm blow with the heal of your palm. Don't stand directly in the gate's path while testing the obstruction sensitivity. The obstruction detection should respond immediately to the blow. The overload potentiometer must be adjusted to the most sensitive setting possible without causing "self-tripping" due to the gate's inherent friction or to variations in the track. Try readjusting the potentiometer several times by small increments, testing the gate in both directions of travel, until you are satisfied.

SMART™ Self adjusting MAximum Run Timer

The RSX1000 has a **S**elf adjusting **MA**ximum **R**un **T**imer, SMART™. The amount of time for the first few cycles of operation are registered and averaged within the motor controller circuitry. After the first few initial cycles, if the gate is activated and no other command is given or an end limit (open or close) is not reached in the previously counted cycle time plus approximately 2 seconds, the operator will be turned off.

The RSX1000 has a thermal cutoff switch to protect the motor and capacitor from sustaining damage. If the gate has been operated for an excessive number of consecutive cycles the thermal cutoff switch will open and the power will be turned off to the motor and control circuitry. After a cooling off period the thermal cutoff switch will automatically reset and the gate can be operated once again.

FINAL SETTING OF THE CLOSE TIMER

To alter the amount of time that the Close Timer will hold the gate open, adjust the timer potentiometer located on the control board. See Figure 22, page 17.

The Close Timer is adjustable from 2 to approximately 60 seconds. Turning the potentiometer **clockwise increases** the delay; turning it **counterclockwise decreases** the delay.

NOTES

TERMINAL STRIP REFERENCE CHART

#	NAME	DESCRIPTION
1	24 VAC	Provides maximum 10 VA auxiliary power for accessories.
2	24 VAC	Provides maximum 10 VA auxiliary power for accessories.
3	ALTERNATE	Momentary input, must be released and re-entered to be recognized.
This input is used for “COMMAND OPEN/COMMAND CLOSE” applications. The 1st signal will cause the gate to begin opening. A 2nd signal received during the open cycle will stop the gate immediately. A 3rd signal will close the gate. Connect appropriate access control devices to this terminal and #0 or #16 COMMON.		
4	RADIO OPEN	Momentary input, must be released and re-entered to be recognized.
Once activated the gate will open fully. Activation while the gate is closing will cause it to re-open.		
5	FREE EXIT	Momentary or continuous input.
Once activated the gate will open fully. Activation while the gate is closing will cause it to re-open. Continuous activation while the gate is open will prevent the Timer-To-Close function from automatically closing the gate.		
6	OPEN	Momentary or continuous signal. On/ Off mode set by Switch #1
Once activated the gate will open fully. Activation while the gate is closing will cause it to re-open. Continuous activation while the gate is open will prevent the Timer-To-Close function from automatically closing the gate. Continuous signal required to move the gate when in the alarm mode.		
7	CLOSE	Momentary or continuous signal. On/ Off mode set by Switch #1
Once activated the gate will close fully. Activation while the gate is opening has no effect. Continuous signal required to move the gate when in the alarm mode.		
8	STOP	Momentary or continuous signal.
Overrides all other signals. Once activated, the gate will immediately stop and await a new command. If the STOP input is continuously activated, the gate will not move.		
9	OPEN PHOTO	Momentary or continuous signal.
This input is active only when referenced to the opening direction, it has no effect on the gate when closing or about to close. If activated when the gate is opening the gate will stop, pause and reverse in the close direction for 1/2 second (approx. 2 inches) and stop. Continuous activation will prevent the gate from moving in the open direction. When the input is removed normal operation is resumed. This input is intended for photoelectric eye systems and other non-contact devices as appropriate. Connect here and to terminal #16 COMMON. Multiple devices may be connected in parallel.		

#	NAME	DESCRIPTION
10	CLOSE PHOTO	Momentary or continuous signal.
This input is active only when referenced to the closing direction, it has no effect on the gate when opening or about to open. If activated when the gate is closing the gate will stop, pause and reverse in the open direction for 1/2 second (approx. 2 inches) and stop. Continuous activation will prevent the gate from moving in the close direction. When the input is removed normal operation is resumed. Continuous activation while the gate is open will prevent the Timer-To-Close function (if enabled) from automatically closing the gate. This input is intended for photoelectric eye systems and other non-contact devices as appropriate. Connect here and to terminal #16 COMMON. Multiple devices may be connected in parallel.		
11	REV LOOP	Momentary or continuous signal.
This input is active only when the gate is closing or when it’s fully open and the Close Timer is operative. All stand-alone vehicle detectors, photo-eyes and active edges should be connected here and to terminals #3 or #13 COMMON. Multiple devices may be connected in parallel.		
12	OPEN EDGE	Momentary or continuous signal.
This input is active only when referenced to the opening direction, it has no effect on the gate when closing or about to close. If activated when the gate is opening the gate will stop, pause and reverse in the close direction for 1/2 second (approx. 2 inches) and stop. Continuous activation will prevent the gate from moving in the open direction. If a second activation occurs before the limit switch is activated the gate will stop and a require a renewed, intended input to move in the open direction and before an automatic activation device (timer, etc.) will operate. This input is intended for Electric Gate Edge systems and other minimum-contact devices as appropriate. Connect here and to terminal #16 COMMON. Multiple devices may be connected in parallel.		
13	CLOSE EDGE	Momentary or continuous signal.
This input is active only when referenced to the closing direction, it has no effect on the gate when opening or about to open. If activated when the gate is closing the gate will stop, pause and reverse in the open direction for 1/2 second (approx. 2 inches) and stop. Continuous activation will prevent the gate from moving in the close direction. Continuous activation while the gate is open will prevent the Timer-To-Close function (if enabled) from automatically closing the gate. If a second activation occurs before the limit switch is activated the gate will stop and a require a renewed, intended input to move in the close direction and before an automatic activation device (timer, etc.) will operate. This input is intended for Electric Gate Edge systems and other minimum-contact devices as appropriate. Connect here and to terminal #16 COMMON. Multiple devices may be connected in parallel.		

Terminal Strip Reference Chart continued on next page →

TERMINAL STRIP REFERENCE CHART

#	NAME	DESCRIPTION
14	MASTER OPEN	Momentary or continuous signal. Master (output configuration)
This terminal is used to coordinate two independent systems (two control box/mechanical unit combinations controlling separate gate leaves). Connects to terminal #6 (OPEN) in the companion control box and controls the direction of movement in the companion box (See Switch Jumper Position, Page 16 for proper configuration).		
16	COMMON	Common connection for low voltage signal inputs, terminals 3 through 15.

#	NAME	DESCRIPTION
15	MASTER CLOSE	Momentary or continuous signal. Master (output configuration)
This terminal is used to coordinate two independent systems (two control box/mechanical unit combinations controlling separate gate leaves). Connects to terminal #7 (CLOSE) in the companion control box and controls the direction of movement in the companion box (See Switch Jumper Position, Page 16 for proper configuration).		
16	COMMON	Common connection for low voltage signal inputs, terminals 3 through 15.

WARNING!

IMPORTANT SAFETY INSTRUCTIONS. TO REDUCE THE RISK OF SEVERE INJURY OR DEATH: READ AND FOLLOW ALL INSTRUCTIONS IN THIS MANUAL!

BASIC OPERATIONAL GUIDE

- If the gate is fully closed an Open Button, Alternate, Radio or Free Exit input will cause the gate to begin moving in the open direction.
- If the gate is fully open a Close Button, Alternate, or Radio input will cause the gate to begin moving in the close direction.
- If the gate is moving in a Close direction a Close Non-Contact Sensor or a Close Contact Sensor input will cause the gate to stop, pause and reverse for approximately 2 inches in the Open direction.
- If the gate is moving in a Close direction an Open Button, Radio, Reversing, or Free Exit Loop input will cause the gate to stop, pause and reverse and run in the Open direction.
- If the gate is moving in a Close direction a Stop Button or Alternate input will cause the gate to stop. A subsequent Alternate input will cause the gate to begin moving in the Open direction.
- If the gate is moving in an Open direction an Open Non-Contact Sensor, Open Contact Sensor input or an Open Overload activation will cause the gate to stop, pause and reverse for approximately 2 inches in the Open direction.
- If the gate is moving in an Open direction a Stop or Alternate input will cause the gate to stop. A subsequent Alternate input will cause the gate to begin moving in the Close direction.

MANUAL OPERATION

The gate can be moved open or close in case of power failure or other need to move the gate manually without disconnecting the operator chain. Remove power from the unit (if not already off) and firmly grasp the leading edge of the gate. Push or pull the gate in the direction desired. The amount of force required to move the gate will depend on the gate weight and the inherent friction of the overall system. Manual operation is to be attempted only when the operator is not moving the gate under power.

To the Owner/End User of Allstar's Gate Operator:

Thank you for choosing the RSX1000 gate operator product. We are confident you will have many years of use and satisfaction with your gate operator.

Our Gate Operator is part of your unique gate operating system, which may consist of a variety of components, including the gate, the gate tracks, posts, and electronic features. These components combined present certain risks and safety issues of which you, the end user, must be aware.

Each unique system presents a unique set of hazards which we cannot possibly address individually. These instructions will help you to identify the potential risks and safety issues your gate operator system presents, and guide you as you make your system as safe as possible for everyone who uses it.

Your first step is to consider the intended use of the gate system, who will be using the gate system, and in what manner the system is installed. You should have a clear understanding of how often the gate will be opened, who will be opening it, whether children and the general public will be near the gate system, and how close the gate system is to public property. Once you have answered these questions, you are ready to decide what safety measures must be taken to prevent injury.

ALL APPROPRIATE SAFETY FEATURES MUST BE INCORPORATED INTO YOUR GATE SYSTEM.

To minimize the risk of entrapment in your gate system, install the following safety features:

- Electric gate edges
- Enclosed tracks
- Vertical guard posts
- Protective screen mesh
- Photoelectric sensors
- Instructional and precautionary signs
- Covers for exposed rollers

Each safety feature is a separate component in your gate system. Read and follow all instructions for each of the components of your unique system. **Ensure that all instructions for mechanical components, safety features of the RSX1000 Gate Operator System are available for everyone who will be using your gate system.**

The two warning signs shipped with your Gate Operator (See Figure 4, Page 5 of this manual). They must be installed in prominent positions on both sides of your gate. Keep them clean and legible.

Read and follow the safety points on this and the following page which present the basic guidelines for the safest operation of your gate operator system.

SAVE THESE INSTRUCTIONS !

PRECAUTIONS FOR PEDESTRIAN TRAFFIC OR RESIDENTIAL AREAS

The internal operator overload sensor may not be adequate entrapment protection in all situations to prevent arm, leg, or hand injuries. Padded electric gate edges, roller guards, pneumatic gate edges, or photoelectric sensors are therefore necessary when automatic gates are used near pedestrian traffic. See the figure below. **Use of pedestrian walk gate is mandatory where there is nearby pedestrian traffic.**

Figure 23: Entrapment Protection

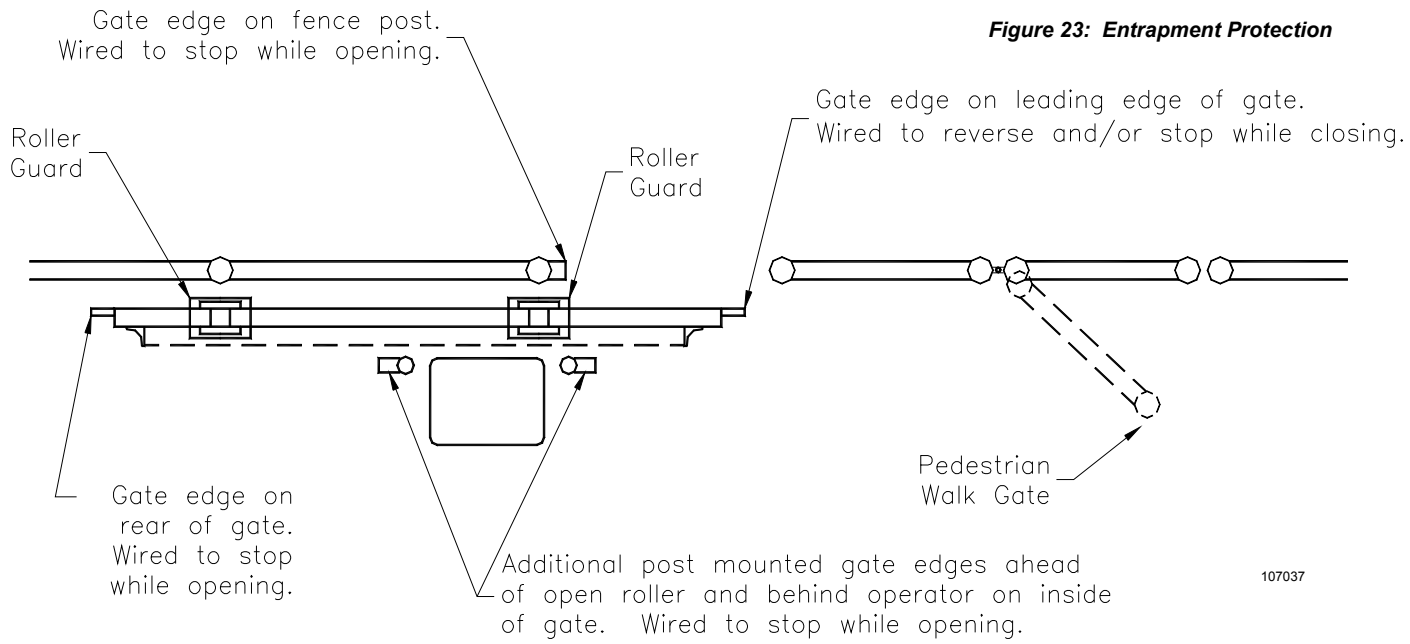

AVOID ENTRAPMENT: Stay away from the **path** of the gate and all moving parts (gate leafs, etc.) at all times. Do not place arms or legs through the gate. Keep clear of the pinch points identified in Figure 24 below. Install guards or other safety features to prevent access to pinch point areas. Install guards on open rollers. The force of the gate can cause serious personal injury or death.

NEVER ALLOW A CHILD TO OPERATE GATE CONTROLS. Do not allow anyone to "ride" a gate, or play in the area of a gate. **Install and store all controls out of children's reach**. Do not stand near or on the gate. Gate may be activated without notice. Install a pedestrian gate in applications where pedestrians need access. This entrance is for vehicles only. Pedestrians must use a separate entrance.

KEEP GATE IN SIGHT: Never activate the gate unless it is in sight. Install mounted controls in full view of the gate. Be sure the gate area is clear before activating the gate, and watch the gate and gate area as the gate is in motion. NO ONE SHOULD CROSS THE PATH OF A MOVING GATE.

LOCATE MANUAL CONTROLS SAFELY: A manual control such as a pushbutton or keyswitch must be included in your gate system design to be used if automatic controls such as radio controls or loop detectors do not function. Carefully consider the placement of the manual control: It must be ***out of reach of the gate*** so that no one pushing the button or inserting the card is in the path of the gate or moving parts; it must also be ***within sight of the gate*** so that the operator can watch the gate and gate area during operation. **The recommended minimum distance between the gate or fence and manual control accessory is 10 feet.**

INSTALL SAFETY DEVICES: In residential applications or in areas where pedestrians may be present, or if your gate closes automatically, be sure an electric edge(s) and/or a photoelectric sensor(s) has (have) been installed and is/are operating properly. These features are intended to detect pedestrian traffic and prevent injury or entrapment. Loop detectors may be installed to detect vehicular traffic and prevent vehicular damage.

MAINTAIN THE GATE AND GATE HARDWARE: A damaged gate or one that cannot be easily opened and closed manually must be repaired before installing a gate operator. A poorly operating gate may cause the load sensing device of the operator to fail, causing a risk of entrapment. ***Never over tighten the clutch or load sensing device to compensate for a poorly operating slide gate.*** Correct all mechanical problems on the gate and gate hardware before installing the gate operator. Have a qaulified service technician make repairs to the gate and gate hardware.

MAINTAIN ALL COMPONENTS OF GATE SYSTEM: Follow all maintenance instructions included with the gate, the gate operator, and the safety features and/or accessories that make up your gate gate operator system. Have a professional service technician perform any adjustments or maintenance to the components. ***Fully test all safety features monthly.*** **If faulty equipment is discovered or suspected, discontinue the use of the gate operator SYSTEM immediately, and have the equipment repaired or replaced.** The gate must reverse on contact with a rigid object or when an object activates the non-contact sensor. After adjusting the force or limit of travel, retest the gate operator. Failure to adjust and retest the gate operator properly can increase the risk of injury or death.

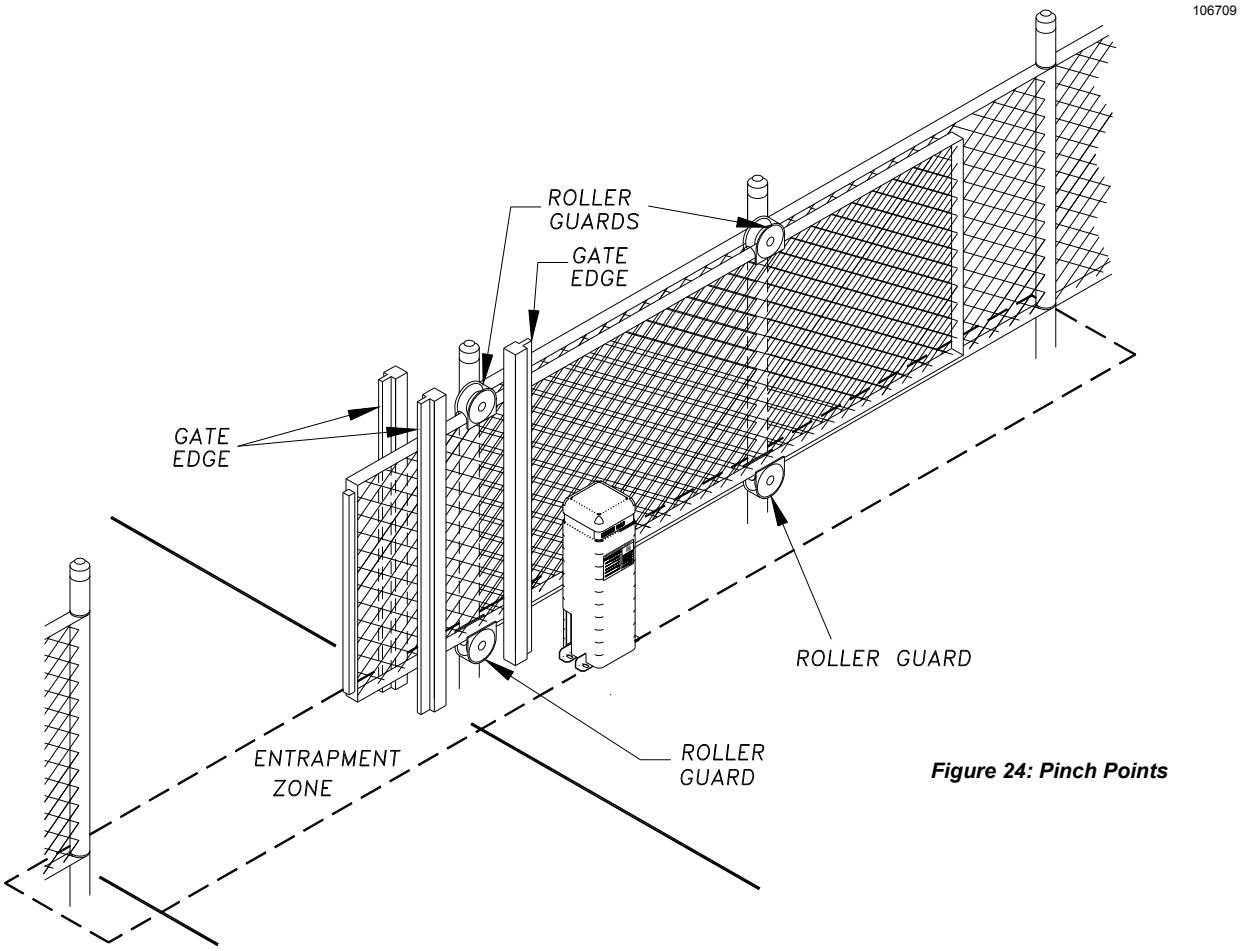

Figure 24: Pinch Points

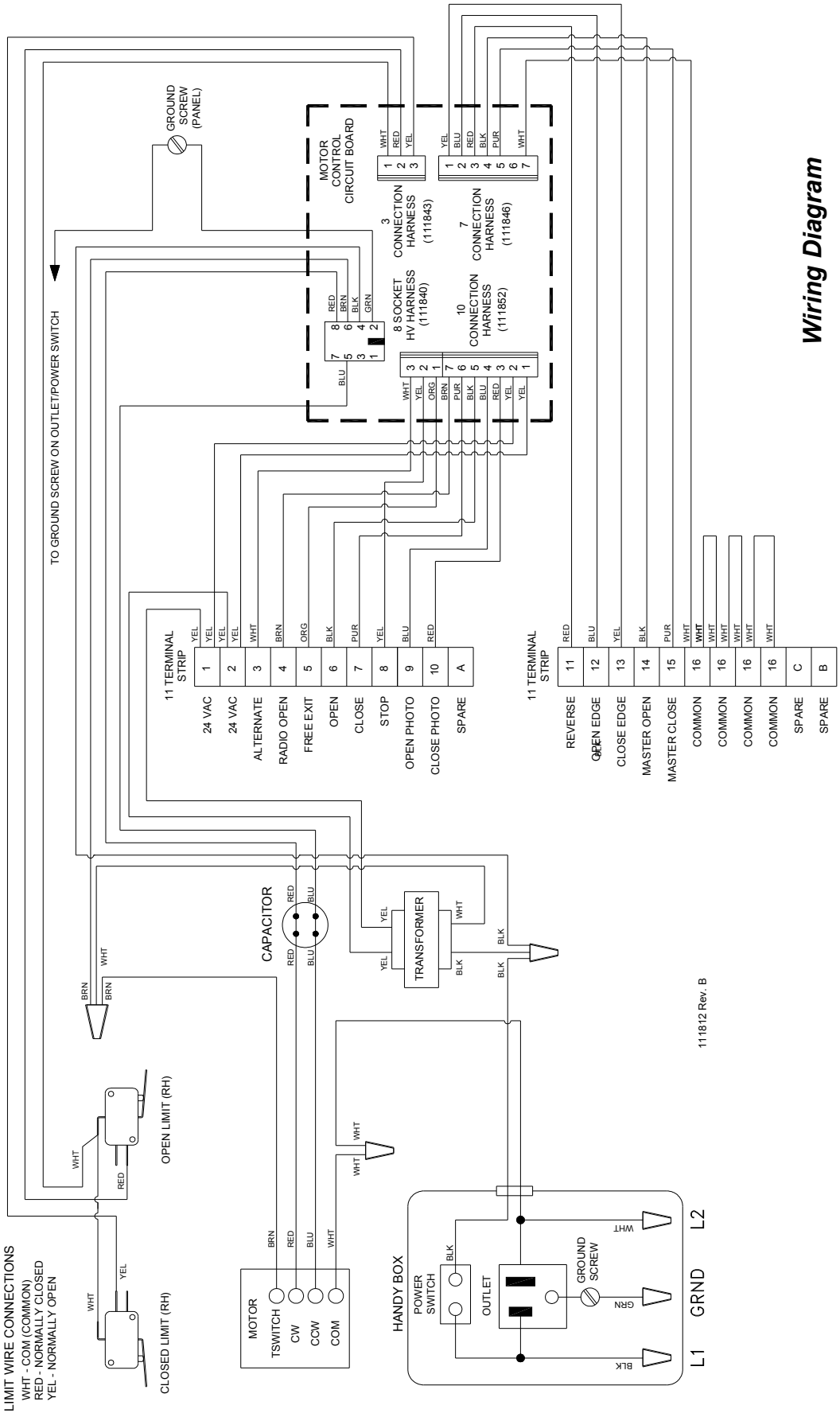
Wiring Diagram
MOTOR CONTROL CIRCUIT BOARD
3 CONNECTION HARNESS (111843)
7 CONNECTION HARNESS (111846)
8 SOCKET HV HARNESS (111840)
10 CONNECTION HARNESS (111852)
GROUND SCREW (PANEL)
TO GROUND SCREW ON OUTLET/POWER SWITCH
11 TERMINAL STRIP
24 VAC
24 VAC
ALTERNATE
RADIO OPEN
FREE EXIT
OPEN
CLOSE
STOP
OPEN PHOTO
CLOSE PHOTO
SPARE
REVERSE
OPEN EDGE
CLOSE EDGE
MASTER OPEN
MASTER CLOSE
COMMON
COMMON
COMMON
COMMON
SPARE
SPARE
CAPACITOR
TRANSFORMER
OPEN LIMIT (RH)
CLOSED LIMIT (RH)
LIMIT WIRE CONNECTIONS
WHT - COM (COMMON)
RED - NORMALLY CLOSED
YEL - NORMALLY OPEN
MOTOR
TSWITCH
CW
CCW
COM
HANDY BOX
POWER SWITCH
OUTLET
GROUND SCREW
L1
GRND
L2
111812 Rev. B

PHYSICAL

PAD: *22" W x 18"D x 3" Elevation*

OVERHEAD CLEARANCE: *Minimum 35" Required*

UNIT SIZE: *10-1/2"W x 10-1/2"D x 34" H*

PEDESTAL FRAME: *11 GA. Steel, Phosphatized with corrosion resistant coating*

COVER: *Architecturally Designed, Rust Free LLPE; Integral chain guard*

SHIPPING WEIGHT: *65 lbs.*

ELECTRICAL

PRIMARY VOLTAGE: *230 VAC, 60 Hz, Single Phase*

ELECTRICAL SOURCE: *One 3-Wire, 15-Amp Service From Breaker Panel Required Per Operator*

CONTROL VOLTAGE: *5 VDC*

RADIO RECEIVER POWER: *24 VAC, 20 mA*

MOTOR: *1/2 HP, 3.5 Amp, PSC, Instant Reversing, Thermally Protected*

DRIVE

PRIMARY DRIVE SYSTEM: *Belt and Pulley (3l290 V-Belt)*

TOTAL SPEED REDUCTION: *6.4:1*

OUTPUT SHAFT: *5/8" Diameter*

DRIVE MECHANISM: *6-Tooth Sprocket; #65 Roller Chain*

LIMITS: *Independent Open & Close; Drive Chain Mounted Limit Cams*

CAPACITIES

MAX. GATE WEIGHT: *300 lbs., Level Grade*

MAX. GATE WIDTH: *16 ft.*

MAX. CYCLES PER HOUR: *10 Open/Close Per Hour; 50 Open/Close Per Day*

GATE SPEED: *8.2 inches/second*

Specifications subject to change without notice. Consult the factory.

Manufacturer's Limited Warranty

Linear LLC warrants its Allstar brand gate operators to be free from defect in material and workmanship for a period of five (5) years from the date of purchase for single family home use and three (3) years from the date of purchase for multi-family and commercial use. This warranty covers all components except the electronic circuit boards which are warranted for three (3) years from the date of purchase for single family home use and two (2) years from the date of purchase for multi-family and commercial use. To obtain service contact your dealer.

To obtain service under this warranty the buyer must obtain authorization instructions for the return of any goods from Linear before returning the goods. The goods must be returned with complete identification, with copy of proof-of-purchase, freight prepaid and in accordance with Linear's instructions or they will not be accepted. In no event will Linear be responsible for goods returned without proper authorization or identification.

Goods returned to Linear for warranty repair within the warranty period, which upon receipt by Linear are confirmed to be defective and covered by this limited warranty, will be repaired or replaced at Linear's sole option, at no cost and returned pre-paid. Defective parts will be repaired or replaced with new or factory rebuilt parts at Linear's sole option.

This limited warranty does not cover non-defect damage, damage caused by unreasonable use, damage caused by improper installation or care, vandalism or lightning, fire or excessive heat, flood or other acts of God (including, but not limited to misuse, abuse or alterations, failure to provide reasonable and necessary maintenance), labor charges for dismantling or reinstalling a repaired or replaced unit, or replacement batteries.

These warranties are in lieu of all other warranties, either expressed or implied. All implied warranties of merchantability and/or fitness for a particular purpose are hereby disclaimed and excluded. Under no circumstances shall Linear be liable for consequential, incidental or special damages arising in connection with the use or inability to use this product. In no event shall Linear's liability for breach of warranty, breach of contract, negligence or strict liability exceed the cost of the product covered hereby. No person is authorized to assume for the Linear any other liability in connection with the sale of this product.

This warranty gives you specific legal rights. You may also have other rights which vary from state to state. Warranty effective after October 1st, 2007.

For Information:
877-441-9300 800-421-1587 www.allstarcorp.com

This Gate Operator is built in the USA and complies with all requirements of ANSI/UL Standard 325.

Copyright © 2007 Linear LLC