INSTALLATION AND OWNER'S MANUAL

M50D

M-SERIES DRAWBAR COMMERCIAL VEHICULAR DOOR OPERATORS

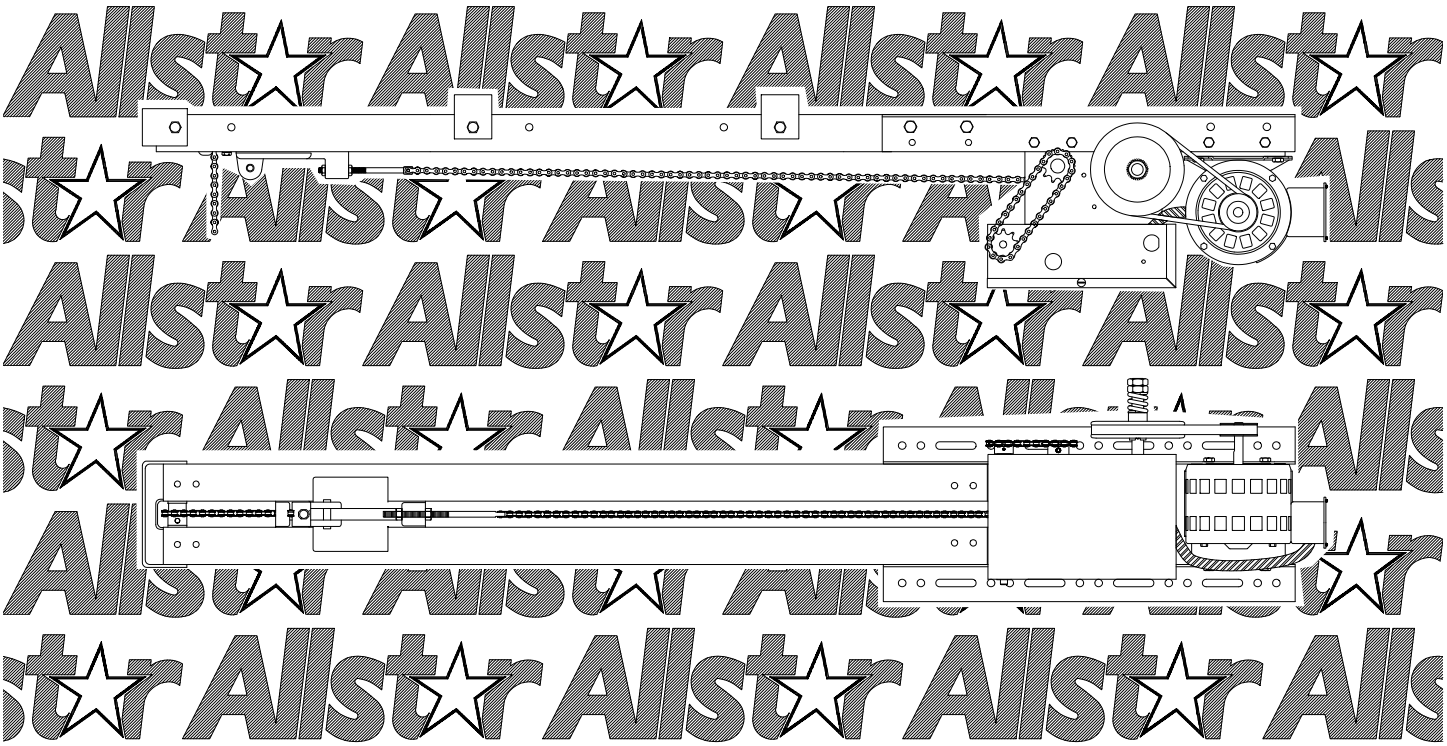

100768

c UL US
LISTED

As of date of manufacture, meets all ANSI/UL 325 Safety Requirements for Vehicular door operators

Serial #:
Date Installed:
Your Dealer:

READ THIS MANUAL CAREFULLY BEFORE INSTALLATION OR USE. SAVE THIS MANUAL!

Model M50 Drawbar Operator Features & Applications 3
Preparation 4
Figure 1 - Component Identification Pictorial 4
Important Installation Warnings (Things To Do Before & During Installation) 5
Table 1 - Component Identification Listing 5
Rail/Chain Assembly Instructions 6
Installation Instructions 7-10
Section C: Installing the Operator 9
Setting The Limits 10
Electrical Wiring Instructions 11
Figure 15 - Pneumatic Door Edge Installation 12
Figure 16 - Field Wiring 12
Operation and Adjustment Instructions 13-17
Important Safety Instructions for Owner 13
Wiring Terms 14
Clutch Adjustment 15
Brake Adjustment 16
Testing 16
Maintenance 17
Figure 19 - Operator Dimensions 17
Wiring Diagrams/With & Without Brake 18-19
Warranty 20

READ THESE STATEMENTS CAREFULLY AND FOLLOW THE INSTRUCTIONS CLOSELY.

The Warning and Caution boxes throughout this manual are there to protect you and your equipment. Pay close attention to these boxes as you follow the manual.

WARNING	CAUTION	WARNING	CAUTION
Indicates a MECHANICAL hazard of INJURY OR DEATH. Gives instructions to avoid the hazard.	Indicates a MECHANICAL hazard of DAMAGE to your operator or equipment. Gives instructions to avoid the hazard.	Indicates an ELECTRICAL hazard of INJURY OR DEATH. Gives instructions to avoid the hazard.	Indicates an ELECTRICAL hazard of DAMAGE to your operator or equipment. Gives instructions to avoid the hazard.

The purpose of this booklet is to provide assembly, installation and operation information concerning Allstar Model M50D Commercial Vehicular Garage Door Operators and related Accessory Products.

NOTICE

IT IS IMPORTANT THAT THIS INSTRUCTION MANUAL BE READ AND UNDERSTOOD COMPLETELY BEFORE INSTALLATION OR OPERATION IS ATTEMPTED. IT IS INTENDED THAT THE INSTALLATION OF THIS UNIT WILL BE DONE ONLY BY PERSONS TRAINED AND QUALIFIED IN THE INSTALLATION, ADJUSTMENT AND SERVICE OF COMMERCIAL OVERHEAD DOORS AND DOOR OPERATORS AND BY QUALIFIED ELECTRICIANS.

NOTICE

THE IMPORTANT SAFEGUARDS AND INSTRUCTIONS IN THIS MANUAL CANNOT COVER ALL POSSIBLE CONDITIONS AND SITUATIONS WHICH MAY OCCUR DURING ITS USE. IT MUST BE UNDERSTOOD THAT COMMON SENSE AND CAUTION MUST BE EXERCISED BY THE PERSON(S) INSTALLING, MAINTAINING AND OPERATING THE EQUIPMENT DESCRIBED HEREIN. DO NOT USE THIS EQUIPMENT FOR ANY OTHER THAN ITS INTENDED PURPOSE - OPERATING OVERHEAD COMMERCIAL VEHICULAR GARAGE DOORS.

STANDARD FEATURES:

Limit Switches: Driven limit switches, easily adjusted over a wide range. The motor may be removed without affecting the limit switch adjustments

Manual Release: Permits manual operation of the door in the event of a power failure.

Control Circuit: Standard three button open, close and stop. 24 Volts AC.

Connections For Auxiliary Entrapment Protection Devices: Use with foam or pneumatic reversing door edge components or a photoelectric beam (across the opening) devise.

Constant Contact To Close: Feature can be activated by simply removing 2 wires from the terminal strip.

Momentary Contact To Open and Close: Standard operation.

MODEL M50D OPERATOR APPLICATIONS:

Drawbar operators are for commercial and industrial use on sectional overhead doors which use horizontal track with normal radius. A draw bar operator is not suitable for doors with high lift exceeding 24 inches or vertical lift doors. The installation requires a minimum clearance of 5 inches above the high arc of the door (the highest point reached by the door at any part of its travel). For back-room requirement refer to **Figure 19, Page 17**. When properly installed a drawbar operator effectively locks the door in the closed position.

The Model M50D drawbar operators are used in the following applications:

-Intermittent Duty, Limited Cycle Commercial installations only
-Rate of operation shall not exceed 10 cycles of openings and closings per hour, maximum of 60 cycles per day.
-Indoor Use Only
-Up to 14 foot high doors with a maximum area of 196 square feet for - maximum area slightly higher for lighter doors - consult factory
-Use with foam or pneumatic reversing edge door components - REQUIRED where the 3 button station is out of sight of the door or any other automatic, remote or manual control is used to activate the door.

OPTIONAL FEATURES:

Digital Radio Controls: Open, Close and Stop operation. Radio units are available to control up to 27 doors from one transmitter

Digital Timer to Close: Adjustable from 0 to 17 minutes in one second intervals.

Keyless Entry System: Connection terminals provided for hard wired or wireless keyless entry system.

Brake: Specify when ordering

PREPARATION

WARNING

ELECTRIC DOOR OPENERS ARE DESIGNED FOR DOORS IN GOOD WORKING CONDITION, PROPERLY COUNTERBALANCED AND PROPERLY ADJUSTED IN ACCORDANCE WITH THE DOOR MANUFACTURER'S INSTALLATION INSTRUCTIONS.

Before starting the installation of the operator, the door must be in good working condition and properly counterbalanced. Inspect the door and track for loose or missing hardware. Test the door manually for balance and ease of operation. Lubricate door hinges and rollers. If necessary, adjust the springs for proper counterbalance of the door.

Before removing the operator powerhead from the shipping carton, inspect the nameplate on the cover of the operator control box to verify that it is the correct model for the intended application and that the voltage and phase are in accordance with electrical power provided at the job site.

The rails and drawbar chain/hardware package are shipped separately from the powerhead. **Warning: Rope off the area to keep personnel and vehicles clear of the door and floor space in the vicinity of the operator during the installation.**

WARNING

SPRINGS ARE SUBJECT TO VERY HIGH FORCES AT ALL TIMES AND ADJUSTMENTS MUST BE MADE ONLY BY A QUALIFIED PROFESSIONAL DOOR INSTALLER.

WARNING

REMOVE OR DISABLE ANY LOCKING DEVICES FROM DOOR AND REMOVE ALL ROPES

COMPONENT IDENTIFICATION PICTORIAL

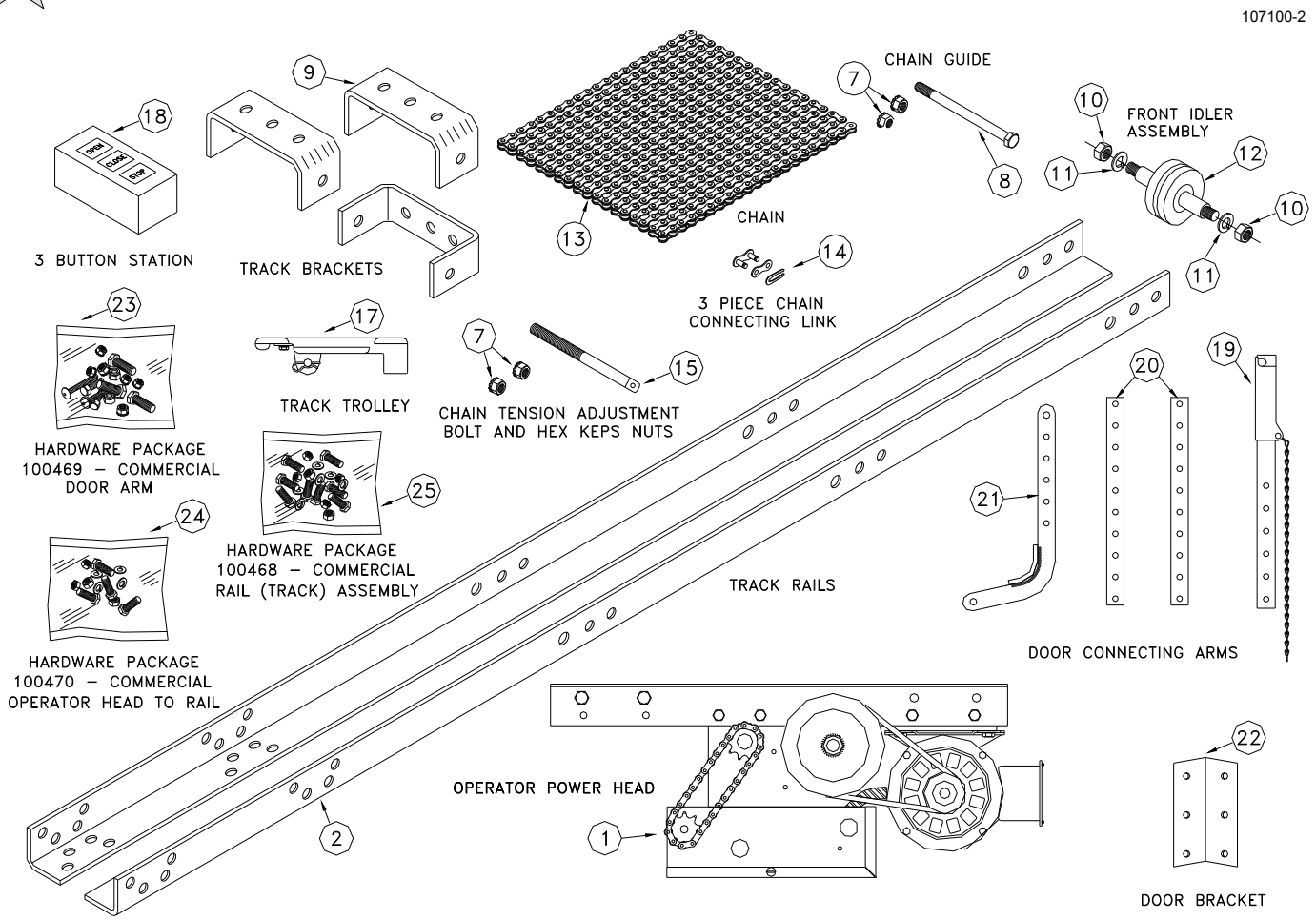

IMPORTANT INSTALLATION NOTES

WARNING

TO REDUCE THE RISK OF SEVERE INJURY OR DEATH: READ AND FOLLOW ALL INSTALLATION INSTRUCTIONS!

- **Install only on a properly balanced garage door. An improperly balanced door could case severe injury. Have a qualified service person make repairs to cables, spring assemblys and other hardware before installing the opener.**
- **Remove all ropes and remove or make inoperative all locks (unless mechanically and/or electrically interlocked to the power unit) that are connected to the garage door before installing the opener.**
- **Lightweight doors (fiberglass, aluminum etc.) must be reinforced to avoid door damage. Check the door manufacturer's instruction manual for a bracing procedure or the availability or a Reinforcement Kit. See Page 9.**
- **Allstar Model M50D is a Commercial Vehicular Door Operator and as such IS NOT recommended for pedestrian traffic. In installations where it is known that pedestrians will be nearby ensure a pedestrian door is available for entrance and exit to the building. In addition YOU MUST install an auxiliary entrapment protection device (reversing door edge or photoelectric beam device).**
- **Connect an auxiliary entrapment protection device (reversing edge or photoelectric device across the door opening). a device of this type is *STRONGLY ADVISED FOR ALL* commercial operator installations. An auxiliary entrapment protection device is *REQUIRED* when the three button control station is out of sight of the door or any other automatic or manual control is used.**
- **Install the opener at least 8 feet or more above the floor.**
- **Do not connect the opener to the source of power until instructed to do so.**
- **Locate the control station:**
  - **a) within sight of the door and;**
  - **b) at a minimum height of five feet above the floor and;**
  - **c) away from all moving parts of the door.**
- **Do not overtighten the clutch adjustment to compensate for a poorly working door.**
- **Securely attach any WARNING signs or placards to either the door or above the control station as directed (see page 11).**
- **After installing the opener, all safety features must be tested for proper operation (see page 16).**

COMPONENT IDENTIFICATION LISTING

ITEM #	PART#	DESCRIPTION	QUAN.
1		Operator Power Head	1
2		Track Rails	2
7	F031	3/8-16 Keps Hex Nut	6
8	101315	3/8 - 16 X 6-1/2 Hex Head Blot	1
9	107049	Track Bracket	AR
10	F034	1/2 - 15 Hex Nut	2
11	F049	1/2 Split Lockwasher	2
12	106265	Front Idler Assembly	1
13		Chain For Track Rail	1
14	X224	3 Piece Chain Connecting Link	1
15	F084	Chain Tension Adjustment Bolt	1
16	F031	3/8 - 16 Keps Hex Nut	2
17	100512	Track Trolley	1

—— AR - As Required

ITEM #	PART#	DESCRIPTION	QUAN
18	E031	3 Button Station	1
19	100513	Release Door Arm	1
20	100236	Extension Door Arm	2
21	100235	Curved Door Arm	1
22	100108	Door Bracket	1
23	100469	Hardware Pkg Com. Door Arm	1
26		3/8 - 16 X 2-1/2 Carriage Bolt	2
16		3/8 - 16 X 1 Hex Head Bolt	1
27		3/8 Nylon Insert Locknut	1
28		5/16 - 18 X 1-1/4 Hex Head Bolt	4
29		5/16 - 18 Keps Hex Nuts	4
25	100468	Hardware Pkg Com. Track Assy	1
4		3/8 - 16 Hex Nut	AR
5		3/8 Split Lockwasher	AR
6		3/8 - 16 X 1-1/2 Hex Head Bolt	AR

RAIL/CHAIN ASSEMBLY

Refer to Figure 1 parts illustrations. The part names and item numbers are referenced identically to the part names and numbers in the assembly procedures that follow. Before starting assembly of the operator track check for the proper length. The tracks are supplied for 8 Feet and 10/12/14 Feet high doors. The tracks should be three (3) feet longer than the door height. If the tracks supplied with the operator are more than three (3) feet longer than the door height it will be necessary to cut off two (2) feet (or 4 feet for 10 FT doors) from the power head mounting end as shown in Figure 2.

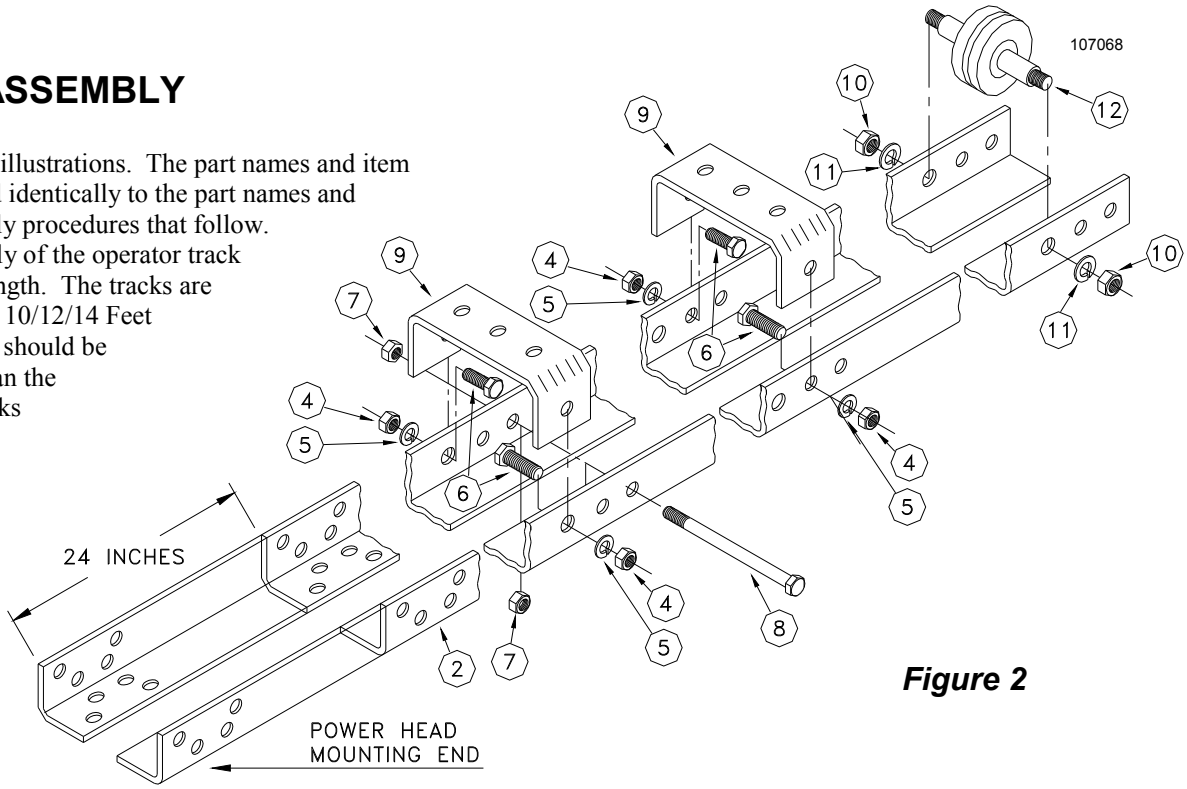

Figure 2

CAUTION: WHEN NECESSARY TO CUT THE TRACK ENSURE THE ENDS ARE LINED UP AS IN FIGURE 2.

1) Assemble the operator track by assembling the items as shown in Figure 2.
2) After the track is assembled, position track assembly onto the operator power head and attach with four 3/8”-16 x 1” bolts, lock washers and nuts (supplied in a separate hardware package #100470).
3) Referring to Figure 1 , 2 and 3 (below) , slide the trolley onto the track with the chain take up bolt lug (C) toward the power head. Thread one 3/8-16 keps nut (attached star washer) onto the Chain take up bolt with the keps part (attached star washer) away from the chain attachment end. Insert the chain take up bolt threaded end through the lug hole on the trolley (C) just far enough to start a second 3/8-16 keps nut. Attach one end of the chain to the opposite end of the threaded stud using a 3-piece chain link (provided). See Figure 3.
4) Install chain around drive sprocket at operator head then around idler at front end of rail and thread through opening at front end of carrier. If the rail is equipped with a chain guide-spacer near its center (12 foot rail or longer only) pass the chain over it in one direction and under it in the other direction to separate the two lengths of chain. Apply initial tension by pushing forward on the carrier while pulling chain tight through opening in the carrier in the direction of **D**. When maximum tension has been applied by this means, swing chain forward and insert retaining plate, **E**, in place. Insert 1/4-20 x 5/8 hex head machine screw through retaining plate, **E**, and tighten plate in place. Make final adjustment of chain tension to remove excess sag by adjusting nuts on threaded rod at chain lug, **C**.

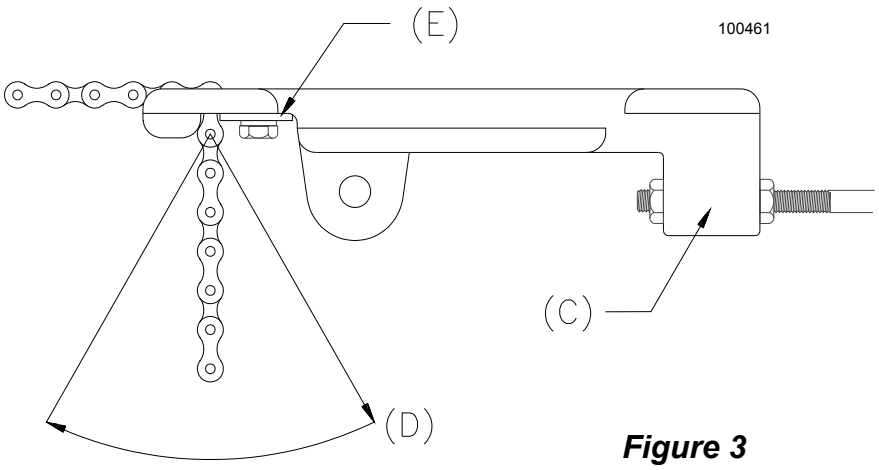

Figure 3

CAUTION

TO AVOID DAMAGE TO DOOR AND OPERATOR ENSURE ALL DOOR LOCKS ARE DISABLED. USE AN INTERLOCK SWITCH IF A LOCK IS REQUIRED TO RETAIN FUNCTIONALITY.

1) Locate the center of the door and mark a line on the wall directly above the door. Extend this line approximately 20" up the wall. See Figure 4.

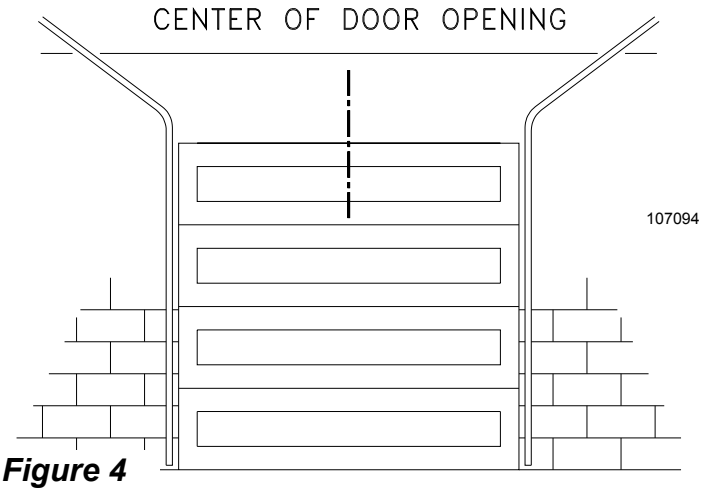

Figure 4

2) Slowly raise the garage door and observe the action of the top section. When the top section reaches the highest point (high arc), use a level and project a line from this point to the center of the door. See Figure 5.

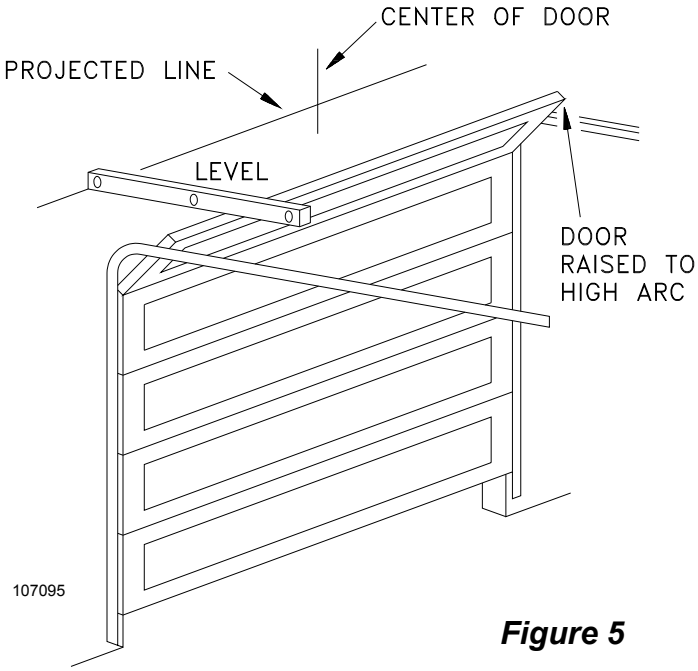

Figure 5

CAUTION

A MINIMUM OF TWO PERSONS ARE REQUIRED FOR OPERATOR INSTALLATION. ENSURE A SAFE RIGID WORKING PLATFORM IS AVAILABLE.

3) Using the projected lines for location, mount a suitable wood block or angle iron, depending on the structure of the building, to the wall above the door opening as shown in Figure 6. Ensure the block or angle iron used will provide a sound and secure mounting pad for the operator rail front mounting bracket, see **CAUTION** warning below.

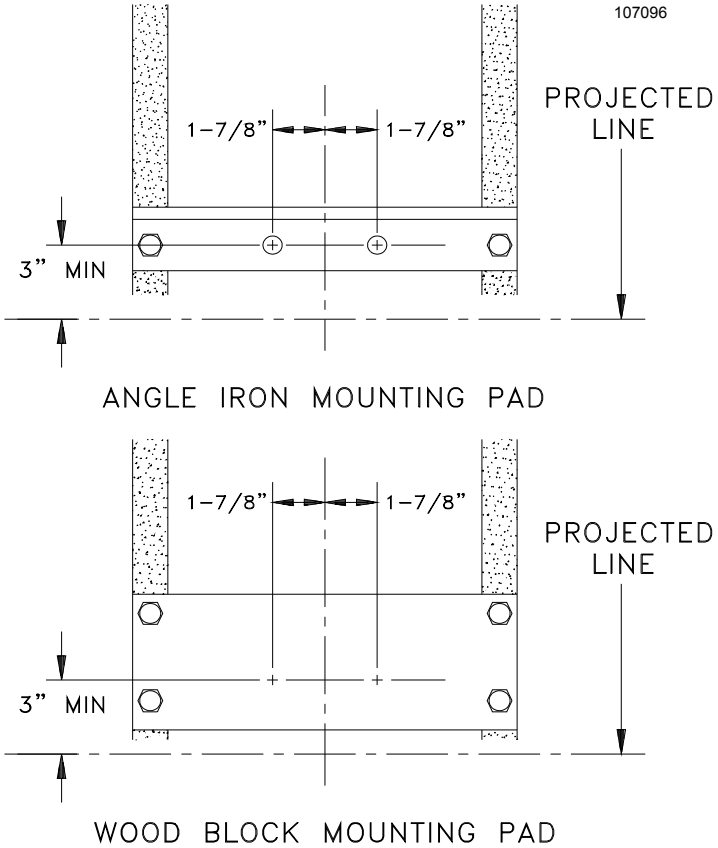

Figure 6

CAUTION

THE FRONT MOUNTING SURFACE FOR THE OPERATOR MUST BE SOUND AND SECURE. IF NECESSARY PROVIDE REINFORCEMENT IN THIS AREA BEFORE MOUNTING THE OPERATOR RAIL FRONT MOUNTING BRACKET.

4) Mount the front mounting bracket (Item 9) to the mounting pad as shown in Figure 7. The location of the door's torsion shaft may prevent you from placing the mounting pad in the location shown. Mount the pad as close as possible to three (3) inches above the door's high arc point.

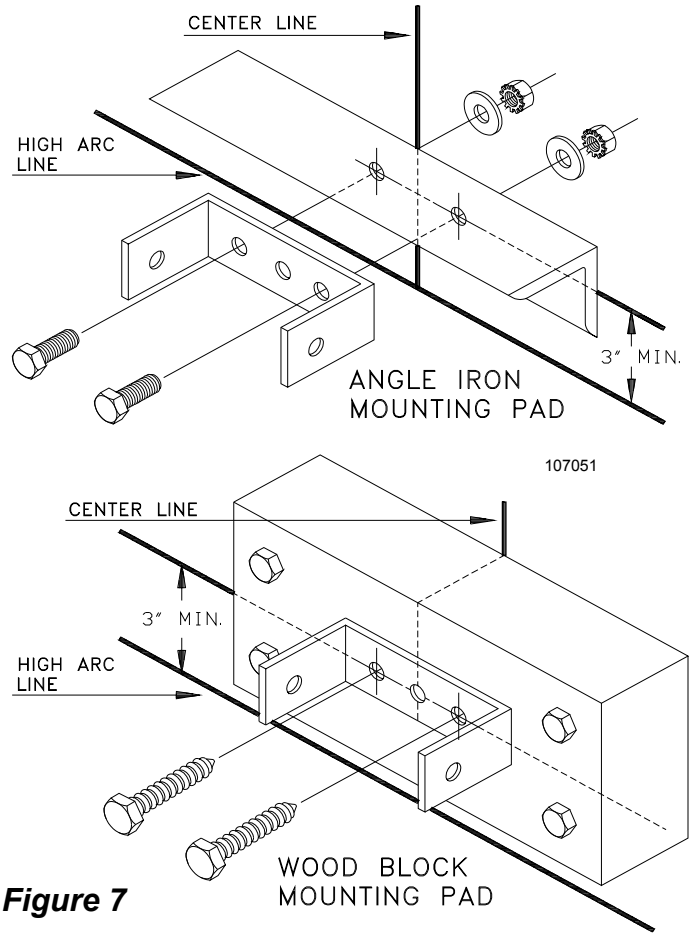

Figure 7

5) With the door in the down position, loosely attach the rail support to the mounting bracket using two (2) bolts, lockwashers and nuts (Items 4, 5, 6). See Figure 8.

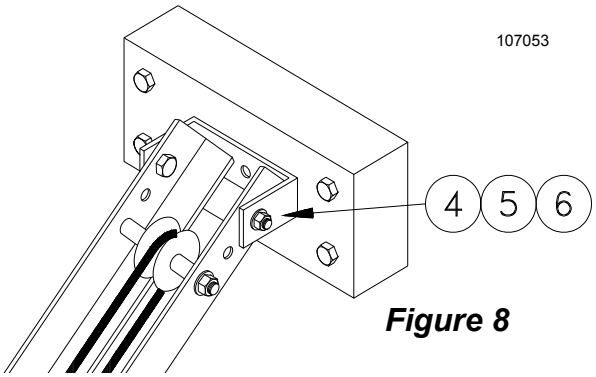

Figure 8

6) Swing the operator to a horizontal position above the door guide rails (high enough to raise the door) and temporarily secure by suspending from the ceiling with a suitable rope or chain or support from the floor to the operator. Now open the garage door slowly, being careful not to dislodge the temporary support. Lower the operator until it is level. Make sure the operator is aligned with the center of the door and the bottom of the rail is at least 2" above the high arc of the door. See Figure 9.

WARNING

FAILURE TO SUSPEND THE OPERATOR SECURELY MAY RESULT IN SERIOUS PERSONAL INJURY OR DEATH.

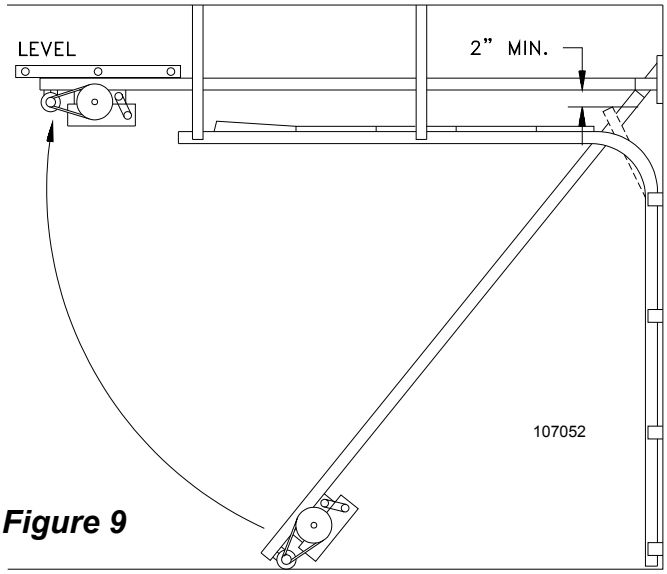

Figure 9

7) Tighten securely the two (2) bolts, nuts and washers that were loosely attached in Step 5. See Figure 10.

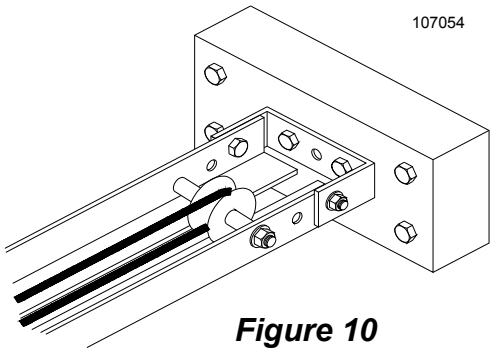

Figure 10

WARNING

SPRINGS, PULLEYS, CABLES AND MOUNTING HARDWARE USED TO BALANCE YOUR GARAGE DOOR ARE UNDER EXTREME TENSION AT ALL TIMES AND CAN CAUSE SEVERE INJURY OR DEATH IF DISTURBED. DO NOT ATTEMPT ADJUSTMENT.

8) Figure 11 details a typical method of hanging the operator from the ceiling. Each installation will vary due to the difference in building structures; but in all installations side braces should be used to further strengthen the installation. If the operator track (rail) is longer than 15 feet a mid support is recommended.

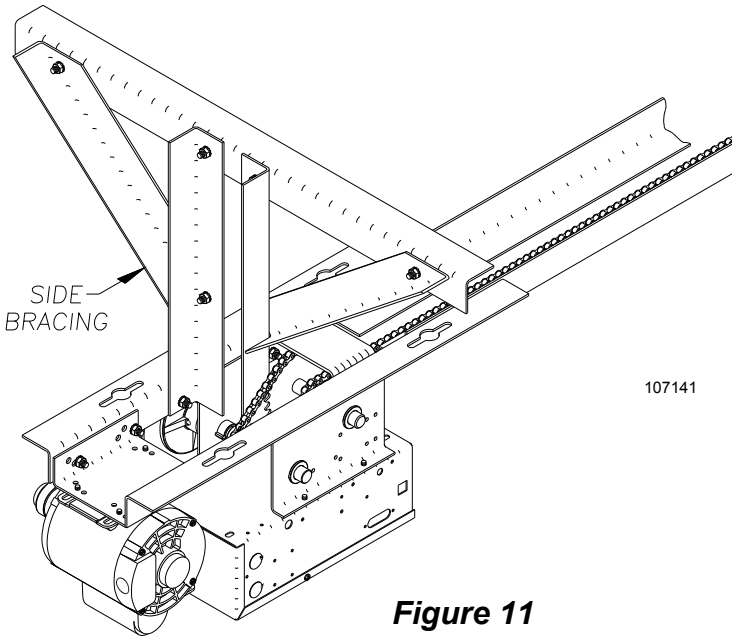

Figure 11

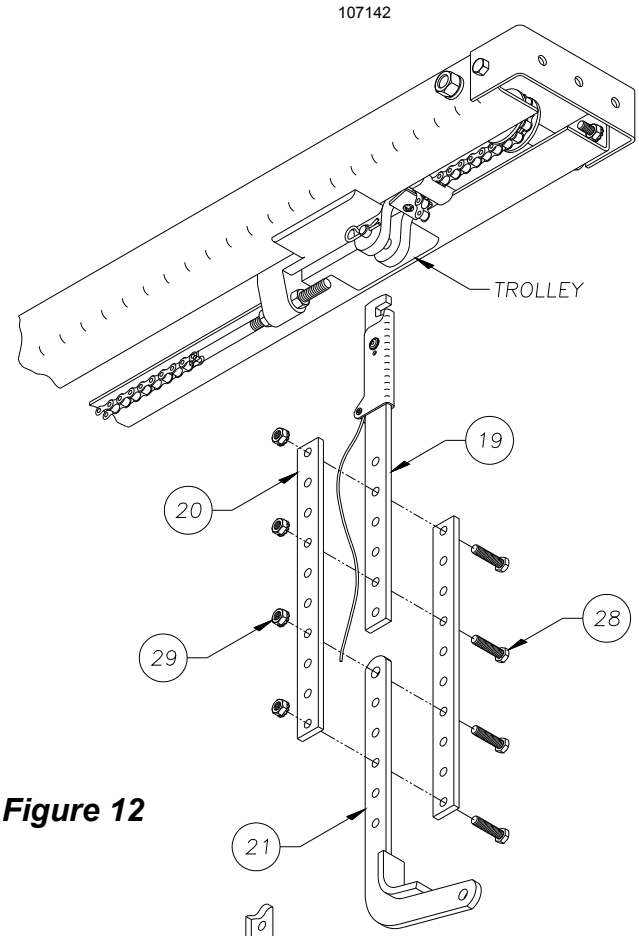

Figure 12

9) Fully close the door and move the trolley to within 2 inches of the idler sprocket. Using Figure 12 as a guide, connect the release arm (Item 19) to the trolley. Connect the two extension arms (Item 20) and the door curved arm (Item 21) to the door release arm with 5/16 inch bolts and keps nuts (Items 28 & 29).

10) Refer to Figure 13. Attach the door bracket (Item 22) to the curved arm using a 3/8 bolt and locknut (Items 16 & 27). Tighten the bolt until snug then back off 1/4 to 1/2 turns so as to allow the arm to pivot on the bolt freely. Position the door bracket to the scribed center line on the door. Use suitable hardware to attach the door bracket to the door.

Figure 13

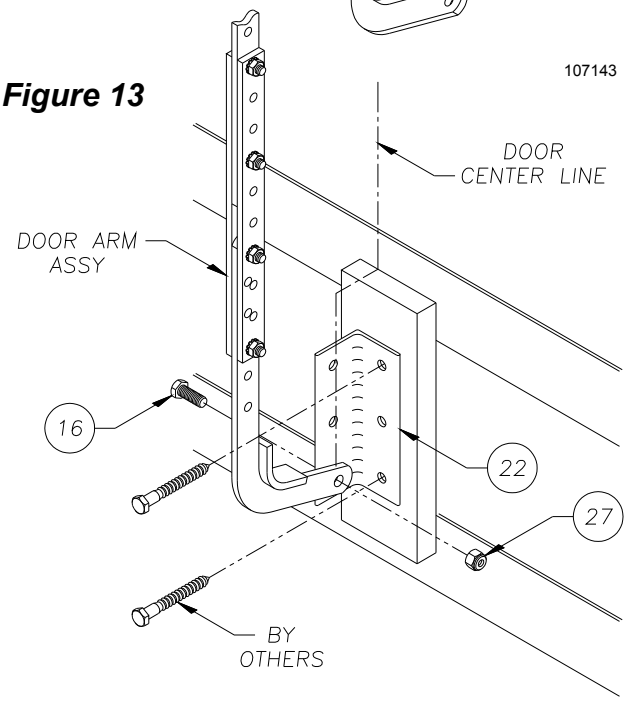

IMPORTANT

TO AVOID DAMAGE TO THE DOOR TOP SECTION REINFORCE THE CENTER STILE WITH A VERTICAL BRACE. ADDITIONAL BRACING/REINFORCEMENT MAY BE REQUIRED WHEN THE DOOR IS CONTROLLED BY AN AUTOMATIC DOOR OPERATOR; CONSULT THE DOOR MANUFACTURER FOR INSTRUCTIONS.

NOTE

BEFORE PROCEEDING RECHECK ALL BOLTS, NUTS AND LAG SCREWS AND ENSURE THEY ARE TIGHT.

WARNING

TO AVOID RISK OF ENTRAPMENT AND POSSIBLE DAMAGE TO THE DOOR AND OPERATOR THE LIMITS MUST BE ADJUSTED BEFORE APPLYING POWER TO THE OPERATOR.

SETTING THE LIMIT SWITCHES

1) With the cover open on the electrical enclosure, reference Figure 14 below. There are four (4) switches (A, B, C, and D) mounted to the 'V' bracket (H). The limit switches are mounted in a fixed position to the underside of the 'V' bracket; with the Close Limit switch (B) on the right and the Open Limit switch (D) on the left. The Reverse Cutout switch (A) and the Single Button Selector switch (C, also could be Timer Engage switch depending on the model) are mounted to the top side of the 'V' bracket as shown. The switches are activated by the two limit nuts (E & G) on the threaded shaft which move laterally along the shaft as the operator opens and closes the door. When a limit nut nears the end of the shaft it activates a set of switches, upper switch first then the lower fixed limit switch.

2) Depress the Limit Nut Retention Plate (F) so it disengages from the slots in the limit nuts and move the Limit nuts to the center of the threaded shaft.

3) Manually raise the door to a nearly open position.

4) Depress the limit nut retaining bracket (F) so it disengages from the slots in the limit nuts. Turn the OPEN limit nut (E) on the shaft until it engages both the Single Button Selector switch (C) and the Open Limit Switch (D). You will need to listen for two audible clicks. Release the retaining bracket and be sure that it engages in slots of both limit nuts.

5) Manually lower the door to the fully closed position and repeat Step #3 with the Close Limit nut (G) and Reverse Cutout switch (A) and the Close Limit switch (B).

6) Manually move the door to a half open position. With the door in a mid position there will be time to stop the door if something or someone were in the door path when initially starting the door.

7) A final limit adjustment will be necessary after the connection of the power supply in order to ensure the door stops at the proper Open and Close positions.

8) Adjustment of the Reverse Cutout switch (A) or Single Button Selector switch (C) is done at the factory and should not be needed in the field. Moving the Reverse Cutout switch closer to the center of the box will increase the point where the reversing feature cuts out (to allow for irregularity in the floor, etc.). The reverse cutout point is factory adjusted to approx. 4 inches off the floor.

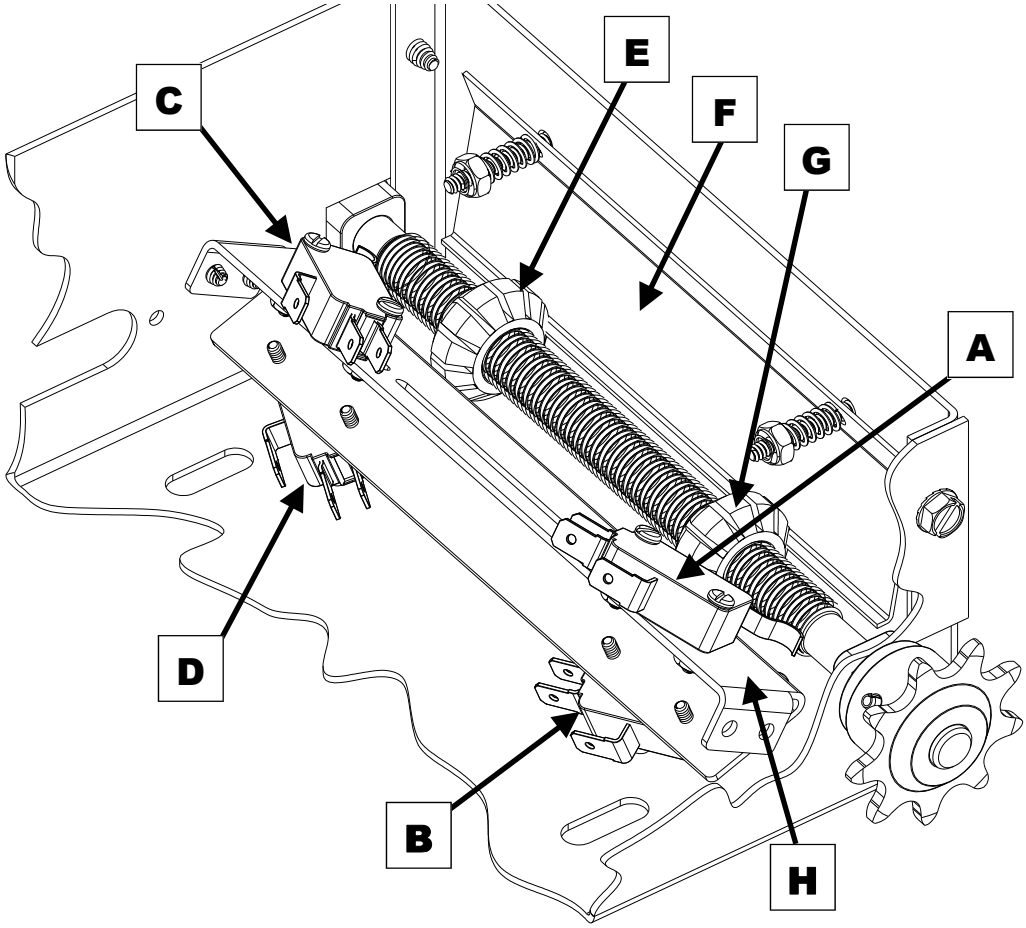

Figure 14 - Limit Assembly

A - REVERSE CUTOUT SWITCH (LS4, ADJUSTABLE)
B - CLOSE LIMIT SWITCH (LS2, FIXED POSITION)
C - SINGLE BUTTON SELECTOR or TIMER ENGAGE SWITCH (LS3, ADJUSTABLE)
D - OPEN LIMIT SWITCH (LS1, FIXED POSITION)
E - OPEN LIMIT NUT
F - LIMIT NUT RETAINING BRCKT
G - CLOSE LIMIT NUT
H - "V" BRACKET

WARNING

TO PREVENT THE RISK OF PERSONAL INJURY OR DEATH :
- **DISCONNECT POWER AT THE FUSE BOX BEFORE PROCEEDING.**
- **ELECTRICAL CONNECTIONS MUST BE MADE BY A QUALIFIED INDIVIDUAL.**
- **OBSERVE LOCAL ELECTRICAL CODES WHEN WIRING THE OPERATOR.**

WARNING: Allstar's M Series operators have been designed and constructed for use with 115 Volts AC in single phase. Check the operator nameplate label on the control box cover for the proper voltage and phase. The application of an improper input voltage or phase will result in catastrophic failure to the internal electrical components.

Observe local electrical codes when wiring the operator.

When hard wiring, observe state and local electrical codes. A wiring diagram is attached to the inside of the control box cover. Connect the appropriate voltage and phase power leads to the appropriate terminals as per the wiring diagram and connect a ground wire to the grounding screw.

The wiring diagram attached inside the cover of the control box details all of the field wiring terminal connections for the operator. Always connect the wires to the push-button controls and auxiliary devices exactly as shown.

Warning: Control voltage of the operator is 24 volts AC, class 2. Do not run the power leads and control circuit wiring in the same electrical conduit.

WARNING

RISK OF ENTRAPMENT THAT MAY RESULT IN SERIOUS PERSONAL INJURY OR DEATH. DISCONNECT POWER TO THE OPENER BEFORE AND DURING INSTALLATION OF AN ACCESSORY REVERSING DOOR EDGE OR PHOTOELECTRIC DEVICE. DO NOT RECONNECT POWER TO OPENER UNTIL INSTRUCTED TO DO SO. ENSURE DOORWAY IS CLEAR BEFORE STARTING TESTING OF UNIT.

Note: M Series operators are pre-wired for door reversing edge components. To comply with code requirements, the door reversing edge components must be installed and wired to the operator. Refer to Figure 15 and 16 for Edge component installation and wiring.

Operators which are equipped with a reversing edge circuit may have one or more additional means of control which should be wired in accordance with the diagram supplied in the operator. To add a second three button station, refer to **Figure 16.**

Number 18 gauge wire or heavier must be used for wiring the control stations and auxiliary control devices to the operator. Smaller gauge wire may cause operational problems, especially when multiple push-button stations are used or during summer months.

WARNING

TO PREVENT THE RISK OF PERSONAL INJURY AND/OR DAMAGE TO DOOR OR PROPERTY, ONLY OPERATE DOOR CONTROL WHEN DOOR IS IN CLEAR VIEW. IF CONTROL STATION CANNOT BE LOCATED WHERE THE DOOR IS VISIBLE OR IF ANY OTHER DEVICE IS USED TO CONTROL THE DOOR AN AUXILIARY ENTRAPMENT DEVISE (DOOR EDGE OR PHOTOELECTRIC) *MUST BE CONNECTED*.

CAUTION

TO AVOID DAMAGE TO DOOR AND OPERATOR ENSURE ALL DOOR LOCKS ARE DISABLED. USE AN INTERLOCK SWITCH IF A LOCK IS REQUIRED TO RETAIN FUNCTIONALITY.

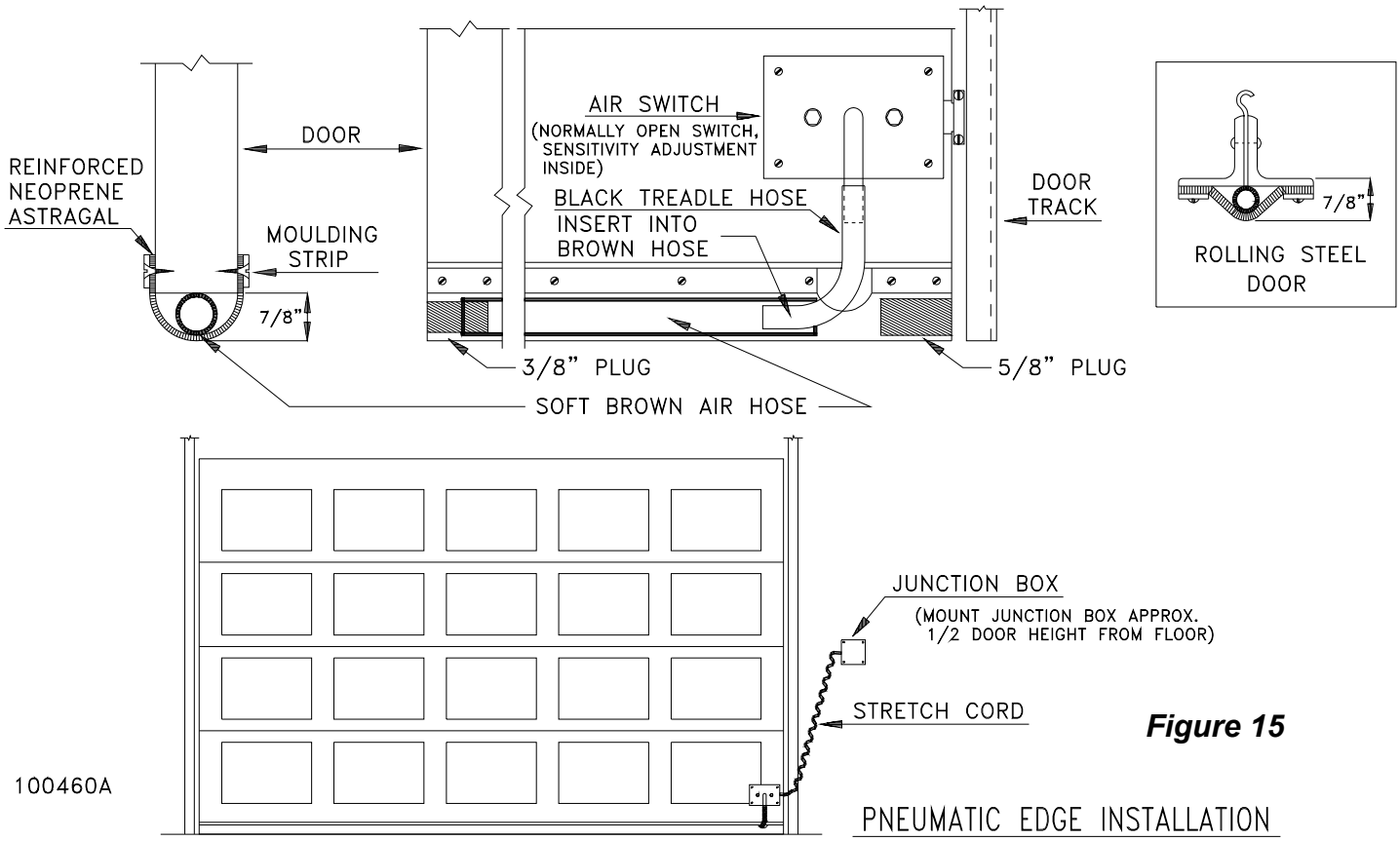

Figure 15

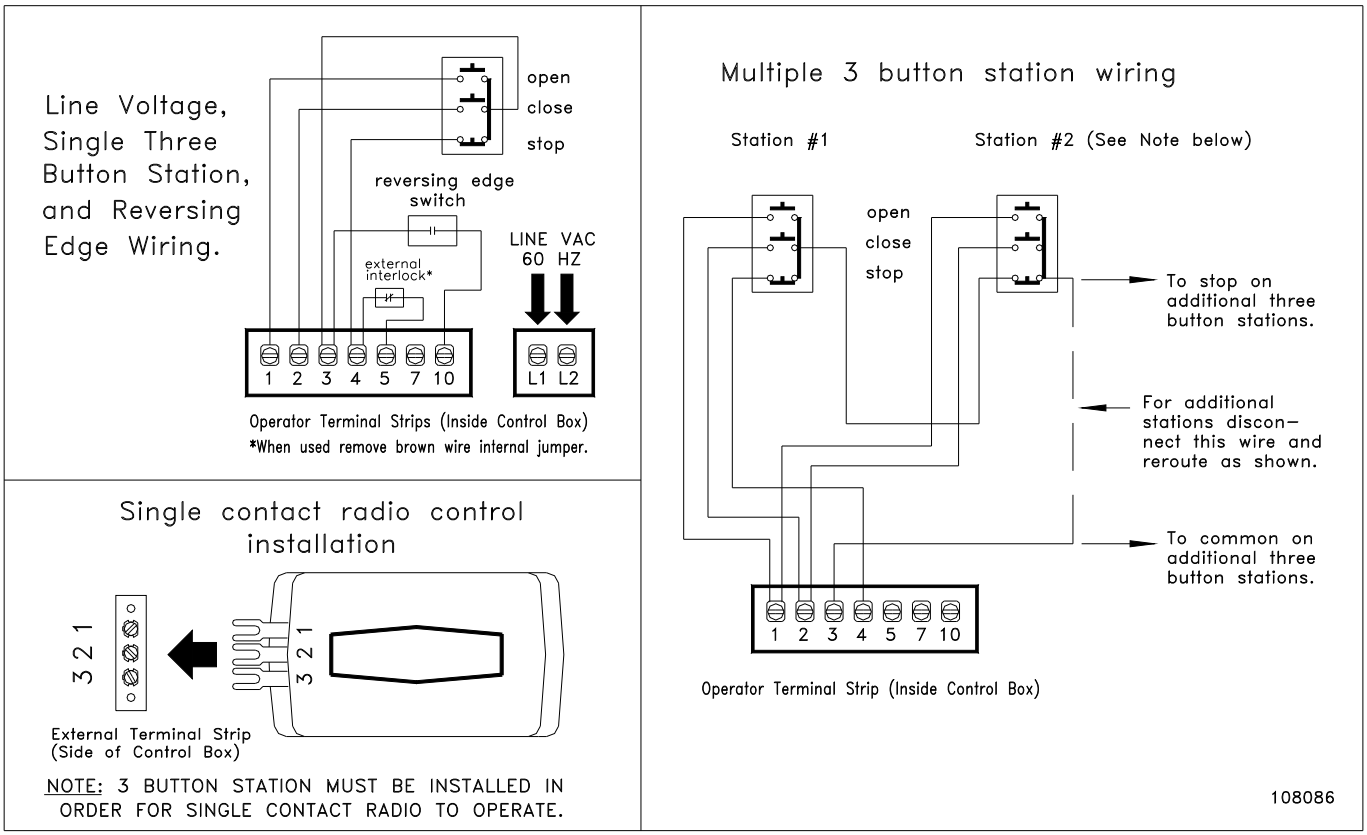

Figure 16

IMPORTANT SAFETY INSTRUCTIONS FOR OWNER

WARNING	TO REDUCE THE RISK OF SEVERE INJURY OR DEATH: READ AND FOLLOW ALL INSTRUCTIONS!

- **Understand all of the operating features of your door control system at the time of its installation. Your installing dealer will demonstrate them for you.**
- **NEVER let children operate or play with door controls. Keep the Remote Control away from children.**
- **ALWAYS keep a moving door in sight and keep people and objects away from the door area until the door is completely closed. NO ONE SHOULD CROSS THE PATH OF A MOVING DOOR.**
- **TEST THE DOOR OPENER'S REVERSING FEATURE (where applicable) MONTHLY. The door MUST reverse upon contact with a 4" high object on the floor. After adjusting the force setting (clutch) or the limit of travel, ALWAYS RETEST the Opener. Failure to ADJUST THE OPENER PROPERLY may result in SERIOUS INJURY OR DEATH.**
- **DO NOT over adjust the force setting (clutch) to compensate for a poorly working door. See page 16 for procedure to check the door operation and page 15 for proper clutch adjustment.**
- **To prevent the motor protector from tripping - Do not exceed 10 door cycles per hour.**
- **<u>IMPORTANT</u>: The hardware box contains a caution label which states: "This door is operated by a light duty operator. To prevent the motor protector from tripping - Do not exceed 10 door cycles per hour." Permanently install this label adjacent to the door, near the push button station, at the eye height of the average adult, approximately six feet above the floor). Do not paint over this label.**
- **If possible, USE THE MANUAL RELEASE only when the door is closed. Use caution when using the Release with the door open. WEAK OR BROKEN SPRINGS MAY ALLOW THE DOOR TO CLOSE RAPIDLY, CAUSING SEVERE INJURY OR DEATH.**
- **KEEP THE GARAGE DOOR PROPERLY BALANCED. See the door owner's manual. An improperly balanced door MAY CAUSE SEVERE INJURY OR DEATH. Have a QUALIFIED SERVICE PERSON MAKE REPAIRS TO CABLES, SPRING ASSEMBLIES AND OTHER HARDWARE. SAVE THIS INSTRUCTION MANUAL FOR END USER**
- **Inspect and maintain your door system as described in this manual.**

WARNING

AVOID ELECTROCUTION:
DO NOT ROUTE LOW VOLTAGE WIRES IN SAME CONDUIT AS HIGH VOLTAGE WIRES. FOLLOW ALL LOCAL ELECTRICAL CODES OR THE NATIONAL ELECTRICAL CODE.

WARNING

FAILURE TO TEST REVERSING SYSTEM COULD RESULT IN DEATH OR SERIOUS INJURY. <u>TEST THIS SYSTEM ONCE A MONTH</u>.

WARNING	TO REDUCE THE RISK OF SEVERE INJURY OR DEATH: READ AND FOLLOW ALL INSTRUCTIONS!

NOTE: It is now necessary to turn on the power in order to run the Opener to check for proper operation and limit settings. Before doing so, ensure that all mounting hardware is installed and has been properly tightened, that all electrical connections are per local code requirements, and that proper wiring practices have been followed. Also, double-check that all ropes have been removed from the door and that the doorway is clear.

WARNING

FAILURE TO TEST REVERSING SYSTEM COULD RESULT IN DEATH OR SERIOUS INJURY. TEST THIS SYSTEM ONCE A MONTH.

WIRING TERMS

MOMENTARY CONTACT: Button can be pushed and then released and door will keep moving or stop without maintaining pressure on the button.

CONSTANT PRESSURE: Constant pressure is required on the button in order for continued door movement. When the button is released the door will stop and possibly reverse to full open depending on wiring type.

DOOR EDGE/PHOTOELECTRIC INPUT: The operator wiring provides for input from an optional pneumatic or electric door bottom edge or photoelectric device that will cause a closing door to stop and may reverse it to open depending on the wiring type.

OPEN OVERRIDE: When the door is closing a momentary push of the OPEN button will reverse the door to open.

CLUTCH ADJUSTMENT

WARNING

RISK OF ENTRAPMENT THAT MAY RESULT IN SERIOUS PERSONAL INJURY OR DEATH. DISCONNECT POWER TO THE OPENER BEFORE SERVICING OR MAKING ADJUSTMENTS. ENSURE DOORWAY IS CLEAR BEFORE STARTING TESTING

The clutch serves to protect the door, the electric operator and other equipment from undue stress or damage caused by starting forces and/or an obstruction to the door. It should be set no tighter than is necessary to smoothly and consistently move the door throughout its full range of travel. When properly set, it will slip freely if the door should encounter an obstruction, and it should be possible to stop the travel of the door by hand.

WARNING: Before adjustment remove power to the operator.

To adjust the clutch, loosen the jamb nut, and turn the adjusting nut, as shown at right Make adjustments in 1/4 turn increments. Always re-tighten the jamb nut before running the operator to prevent clutch from changing its setting.

CAUTION
NEVER COMPRESS CLUTCH SPRING BEYOND POINT LIMITED BY THE DESIGN OF THE OPERATOR OR REPLACE IT WITH A HEAVIER SPRING

Due to changing conditions of the door and normal wear, it may be necessary to occasionally readjust the clutch to obtain dependable operation.

WARNING: BEFORE DOING SO BE CERTAIN THAT THE DOOR IS IN GOOD WORKING CONDITION, PROPERLY COUNTERBALANCED AND THAT THE CLUTCH IS NOT SLIPPING BECAUSE OF LOOSE OR MISSING HARDWARE, BINDING IN THE TRACK, RUBBING AGAINST THE DOOR STOPS OR DEFECTIVE OR MISADJUSTED SPRINGS. ANY SERVICE REQUIRED TO THE DOOR, DOOR SPRINGS OR DOOR OPERATOR MUST BE PREFORMED BY A QUALIFIED PROFESSIONAL DOOR INSTALLER.

The fiber disk will wear during normal operation and should be replaced when it becomes difficult or impossible to sufficiently tighten the clutch to obtain smooth operation of the door when it is in good working condition. To replace the fiber disk, first loosen the motor mounting bolts and remove the V-belt then the clutch adjusting nuts, spring and clutch pulley. Check condition of V-belt before reassembly and replace if required. After reassembly, adjust clutch as described above.

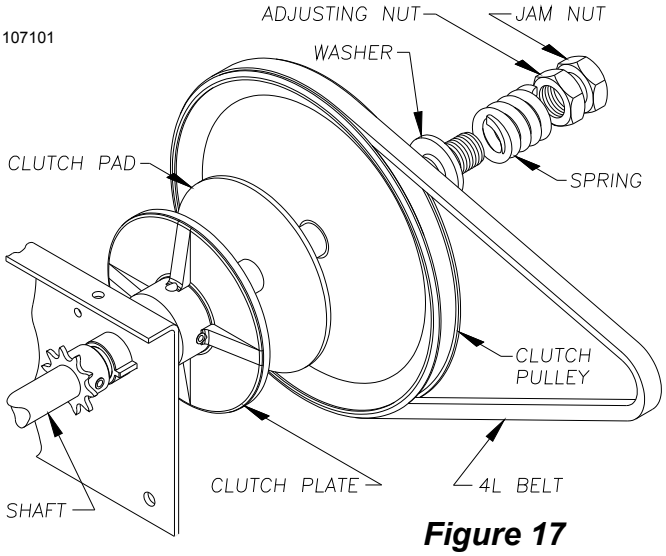

Figure 17

WARNING

IMPROPER ADJUSTMENT OF CLUTCH SETTING COULD CAUSE ENTRAPMENT, INJURY OR DEATH.
SET CLUTCH ADJUSTMENT FOR JUST ENOUGH FORCE TO OPERATE THE DOOR RELIABLY, BUT NO STRONGER. Contact a service professional to correct any binding, sticking or other door problems. DO NOT OVER-ADJUST CLUTCH SETTING TO COMPENSATE FOR A POORLY WORKING DOOR.

BRAKE ADJUSTMENT (Optional on Drawbar)

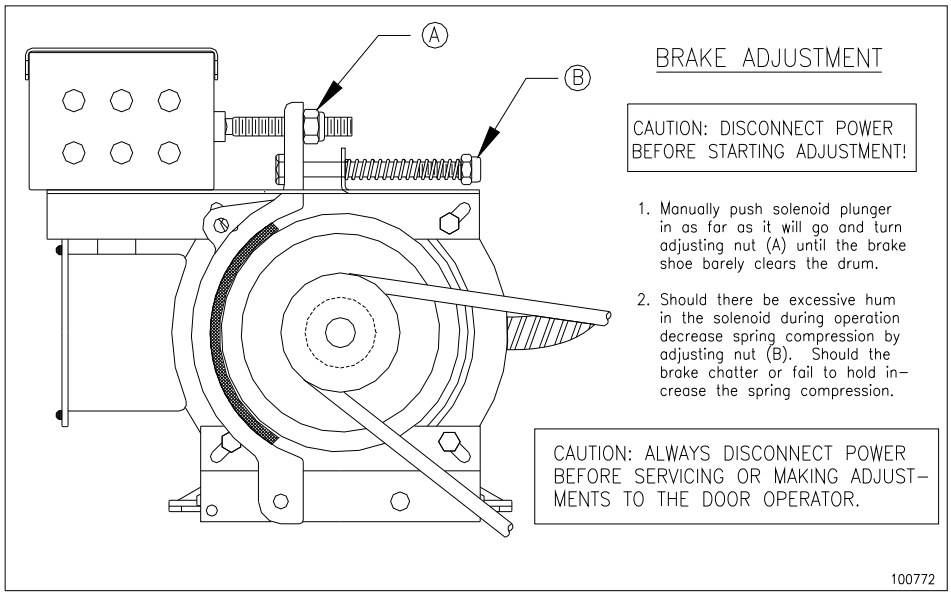

Figure 18

TESTING

Following installation, the operator MUST be tested and respond correctly to all controls as specified on the wiring diagram. Keep personnel and equipment clear of the area beneath the door when performing the tests. When testing the 3-button wall station, first observe that each button operates the door in the direction indicated and that the STOP button performs that function. With the door stopped at its full open position, the OPEN button should be inoperative. This should be verified and, likewise, the CLOSE button should be inoperative with the door fully closed.

Certain operator control circuits use only a single button or a two button control station and may be designed to function differently than the more common three-button circuit described above. Test the controls in accordance with the description of operation as indicated on the wiring diagram.

Observe the door when traveling in each direction for smoothness of operation. Test the setting of the clutch by restraining the door by hand. The clutch should slip. Re-check the limit settings. The door should close tightly at the floor without excessive impact. Likewise, it should fully clear the door opening without the carrier striking the stops on the rail.

The M series operators are equipped with a reversing edge circuit and to conform with code, need to be connected to a pneumatic or foam door edge or photoelectric device. To test an edge for proper reversal, place an object beneath the leading edge of the door. To test a photoelectric device for proper reversal, start the door down and obstruct the beam. The door should instantly reverse when it comes into contact with the object provided the height of the object exceeds the cut out point built into the close limit switch (approx. four (4) inches).

CAUTION

DO NOT STAND UNDER DOOR TO TEST REVERSING EDGE USE A CORRUGATED BOX OR OTHER SIMILAR OBJECT

If the operator is equipped with other means of control, such as additional 3 button stations or radio controls, each of these should be tested separately for proper operation.

Test the manual disconnect with the door in the fully closed position. The door arm should freely fall away from the carrier when the release chain is pulled. If it is difficult to release and the door arm appears to be under compression, reset the CLOSE limit slightly to reduce the travel of the carrier in the close direction.

WARNING

ALWAYS DISCONNECT POWER TO THE OPERATOR BEFORE SERVICING, CONNECTING ACCESSORY DEVICES OR MAKING ADJUSTMENTS.

Normally, very little maintenance is required. A monthly visual inspection must be made for loose or missing hardware and for excessive slack in the V-Belt and drawbar chain. The clutch must be tested periodically and adjustments made if necessary (see page 15). The brake (where applicable) is adjusted at the factory and will need periodic adjustment for wear. When adjustment becomes necessary see **Figure 18** on page 16 for the adjustment procedure.

Test the reversing edge circuit at least once a month by permitting the door to contact an obstruction while closing. To test a pneumatic or foam door edge for proper reversal, place an object beneath the leading edge of the door. To test a photoelectric device for proper reversal, start the door down and obstruct the beam. The door should instantly reverse when it comes into contact with the object provided the height of the object exceeds the cut out point built into the close limit switch (approx. four (4) inches).

CAUTION

DO NOT STAND UNDER DOOR TO TEST REVERSING EDGE USE A CORRUGATED BOX OR OTHER SIMILAR OBJECT

Lubrication of the operator is not required. It is important, for trouble free service from the operator, that the door be kept free from binding, properly counter balanced and periodically lubricated. **An annual inspection of the door by a qualified overhead door professional is recommended.**

Warning: Repairs and adjustments to the door and operator should be performed only by someone qualified to service commercial overhead doors and operators.

FIGURE 19 - OPERATOR DIMENSIONS

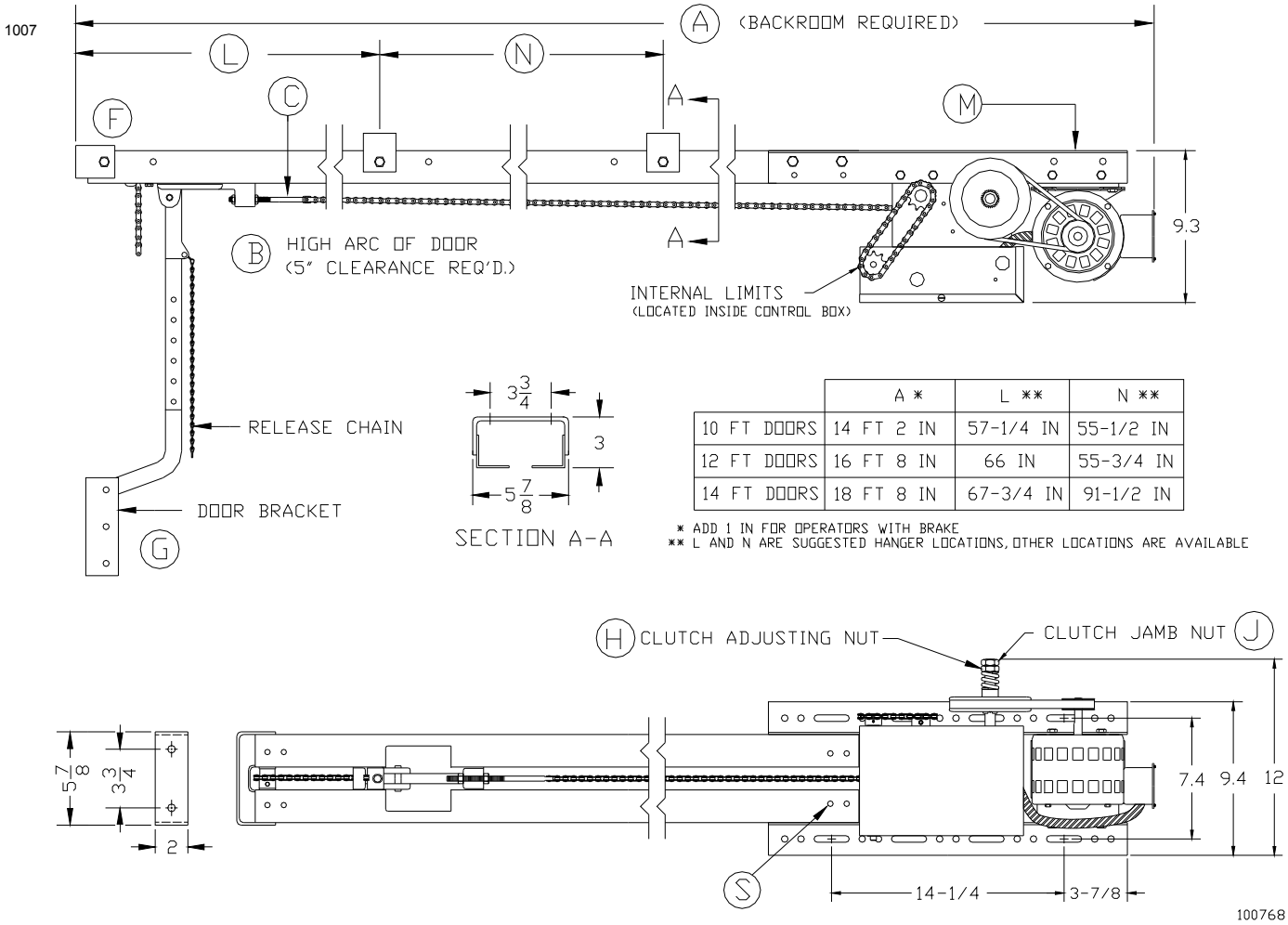

	A *	L **	N **
10 FT DOORS	14 FT 2 IN	57-1/4 IN	55-1/2 IN
12 FT DOORS	16 FT 8 IN	66 IN	55-3/4 IN
14 FT DOORS	18 FT 8 IN	67-3/4 IN	91-1/2 IN

* ADD 1 IN FOR OPERATORS WITH BRAKE
** L AND N ARE SUGGESTED HANGER LOCATIONS, OTHER LOCATIONS ARE AVAILABLE

WIRING DIAGRAM/SCHEMATIC - WITHOUT BRAKE

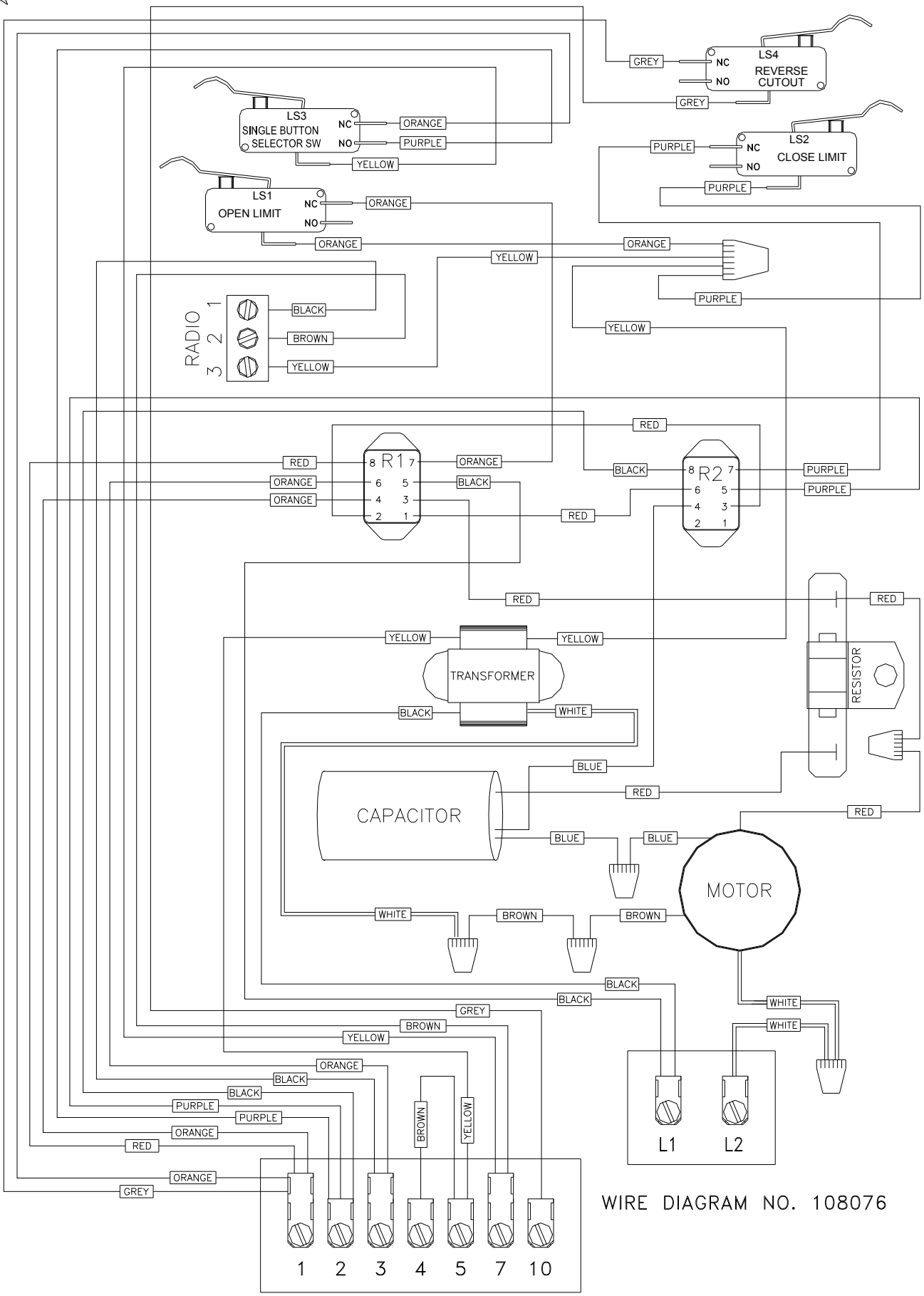

WIRE DIAGRAM NO. 108076

WIRING DIAGRAM/SCHEMATIC - WITH BRAKE

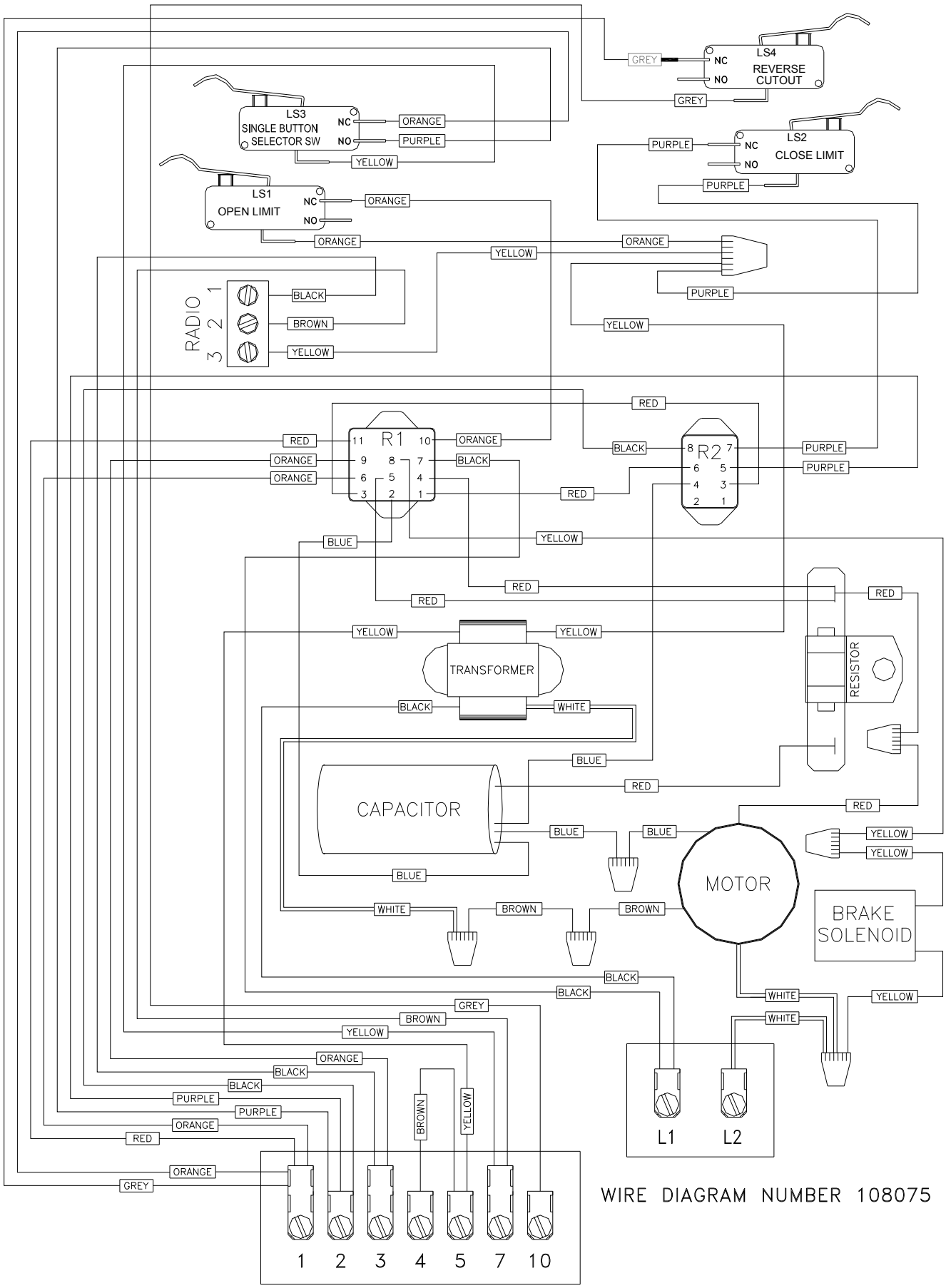

Manufacturer's Limited Warranty

Linear LLC warrants its Allstar brand commercial door operators to be free from defect in material and workmanship for a period of two (2) years from the date of purchase. To obtain service contact your dealer.

To obtain service under this warranty the buyer must obtain authorization instructions for the return of any goods from Linear before returning the goods. The goods must be returned with complete identification, with copy of proof-of-purchase, freight prepaid and in accordance with Linear's instructions or they will not be accepted. In no event will Linear be responsible for goods returned without proper authorization or identification.

Goods returned to Linear for warranty repair within the warranty period, which upon receipt by Linear are confirmed to be defective and covered by this limited warranty, will be repaired or replaced at Linear's sole option, at no cost and returned pre-paid. Defective parts will be repaired or replaced with new or factory rebuilt parts at Linear's sole option.

This limited warranty does not cover non-defect damage, damage caused by unreasonable use, damage caused by improper installation or care, vandalism or lightning, fire or excessive heat, flood or other acts of God (including, but not limited to misuse, abuse or alterations, failure to provide reasonable and necessary maintenance), labor charges for dismantling or reinstalling a repaired or replaced unit, or replacement batteries.

These warranties are in lieu of all other warranties, either expressed or implied. All implied warranties of merchantability and/or fitness for a particular purpose are hereby disclaimed and excluded. Under no circumstances shall Linear be liable for consequential, incidental or special damages arising in connection with the use or inability to use this product. In no event shall Linear's liability for breach of warranty, breach of contract, negligence or strict liability exceed the cost of the product covered hereby. No person is authorized to assume for Linear any other liability in connection with the sale of this product.

This warranty gives you specific legal rights. You may also have other rights which vary from state to state. Warranty effective after October 1st, 2007.

For Information:
877-441-9300 800-421-1587 www.allstarcorp.com

This Door Operator is built in the USA and complies with all requirements of ANSI/UL Standard 325.

Copyright © 2007 Linear LLC