INSTALLATION AND OWNER'S MANUAL

J & H

J & H SERIES JACKSHAFT COMMERCIAL VEHICULAR DOOR OPERATORS

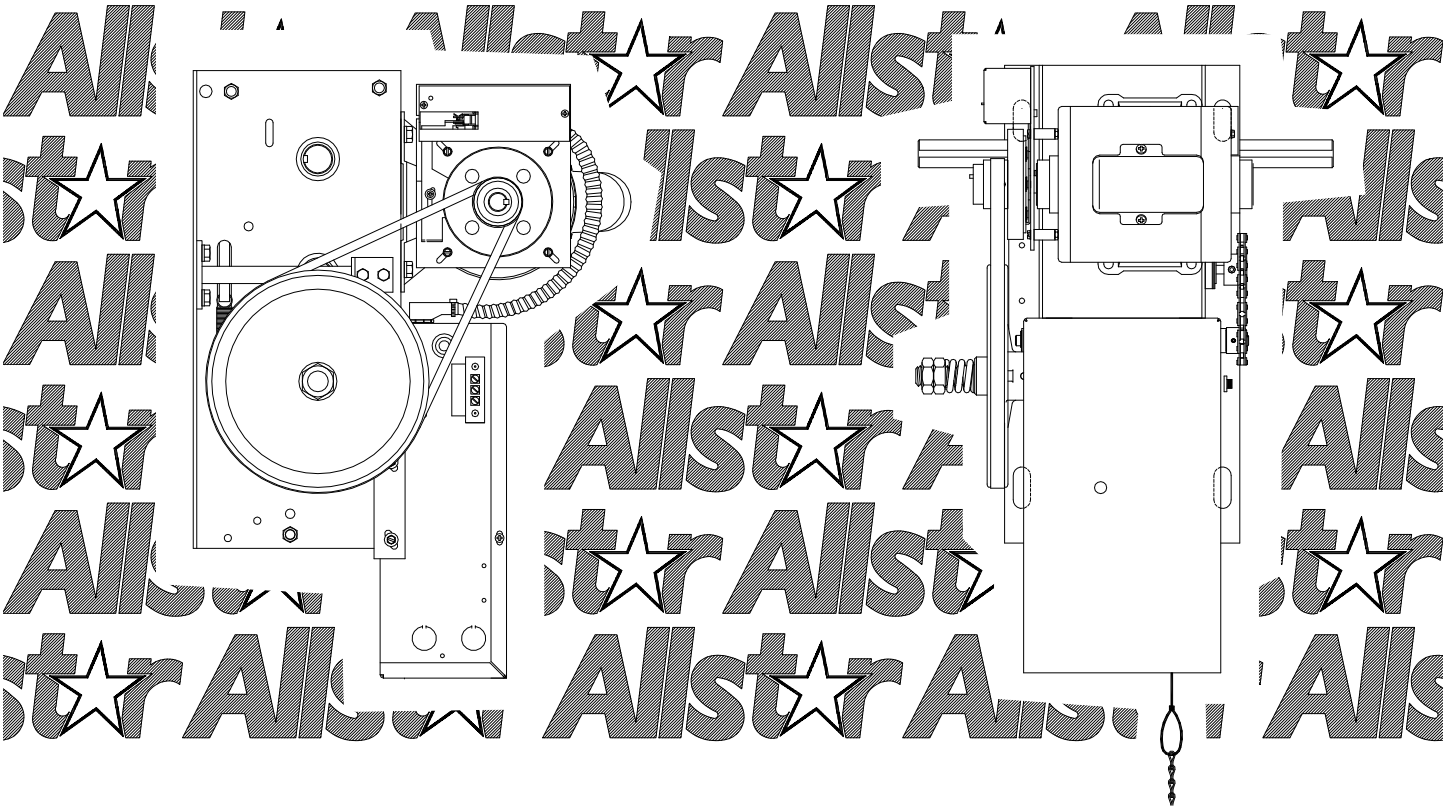

c UL us LISTED

As of date of manufacture, meets all ANSI/UL 325 Safety Requirements for Vehicular door operators

Serial #:
Date Installed:
Your Dealer:

READ THIS MANUAL CAREFULLY BEFORE INSTALLATION OR USE

SAVE THESE INSTRUCTIONS !

TABLE OF CONTENTS

Jackshaft Operator Applications....3
Preparation....4
Figure 1 - Component Identification Pictorial....4
Important Installation Warnings (Things To Do Before & During Installation)....5
Table 1 - Component Identification Listing....5
Installation Instructions....6-7
Figure 2 - Operator Footprint - J/H....6
Figure 5 - Release/Hand Chain Wall Bracket Installation....7
Figure 6 - Mounting Positions....8
Figure 7 - Operator Dimensions - Model H....9
Figure 7A - Operator Dimensions - Model J....9
Setting The Limits....10
Figure 8 - Limit Adjustment....10
Electrical Wiring Instructions....11
Figure 9 - Pneumatic Door Edge Installation....12
Figure 10 - Field Wiring....12
Operation and Adjustment Instructions....13-17
Important Safety Instructions for Owner....13
Wiring Terms....13
Wiring Types....14
Clutch Adjustment....15
Brake Adjustment....16
Testing....16
Maintenance....17
Wiring Diagram - Single Phase....18
Wiring Diagram - Three Phase....19
Warranty....20

READ THESE STATEMENTS CAREFULLY AND FOLLOW THE INSTRUCTIONS CLOSELY.

The Warning and Caution boxes throughout this manual are there to protect you and your equipment. Pay close attention to these boxes as you follow the manual.

WARNING	CAUTION	WARNING	CAUTION
Indicates a MECHANICAL hazard of INJURY OR DEATH. Gives instructions to avoid the hazard.	Indicates a MECHANICAL hazard of DAMAGE to your operator or equipment. Gives instructions to avoid the hazard.	Indicates an ELECTRICAL hazard of INJURY OR DEATH. Gives instructions to avoid the hazard.	Indicates an ELECTRICAL hazard of DAMAGE to your operator or equipment. Gives instructions to avoid the hazard.

The purpose of this booklet is to provide assembly, installation and operation information concerning Allstar Model J & H Commercial Vehicular Garage Door Operators and related Accessory Products.

NOTICE

IT IS IMPORTANT THAT THIS INSTRUCTION MANUAL BE READ AND UNDERSTOOD COMPLETELY BEFORE INSTALLATION OR OPERATION IS ATTEMPTED. IT IS INTENDED THAT THE INSTALLATION OF THIS UNIT WILL BE DONE ONLY BY PERSONS TRAINED AND QUALIFIED IN THE INSTALLATION, ADJUSTMENT AND SERVICE OF COMMERCIAL OVERHEAD DOORS AND DOOR OPERATORS AND BY QUALIFIED ELECTRICIANS.

NOTICE

THE IMPORTANT SAFEGUARDS AND INSTRUCTIONS IN THIS MANUAL CANNOT COVER ALL POSSIBLE CONDITIONS AND SITUATIONS WHICH MAY OCCUR DURING ITS USE. IT MUST BE UNDERSTOOD THAT COMMON SENSE AND CAUTION MUST BE EXERCISED BY THE PERSON(S) INSTALLING, MAINTAINING AND OPERATING THE EQUIPMENT DESCRIBED HEREIN. DO NOT USE THIS EQUIPMENT FOR ANY OTHER THAN ITS INTENDED PURPOSE - OPERATING OVERHEAD COMMERCIAL VEHICULAR GARAGE DOORS.

STANDARD FEATURES:

Limit Switches: Driven limit switches, easily adjusted over a wide range. The motor may be removed without affecting the limit switch adjustments

Manual Release: Permits manual operation of the door in the event of a power failure. The Model H is equipped with a chain hoist to aid in manual operation.

Control Circuit: Standard three button open, close and stop. 24 Volts AC.

Connections For Auxiliary Entrapment Protection Devices: Use with foam or pneumatic reversing door edge components or a photoelectric beam (across the opening) device.

Constant Contact To Close: Feature can be activated by simply moving a wire on the terminal strip.

Momentary Contact To Close: Standard operation.

MODEL J & H OPERATOR APPLICATIONS:

Jackshaft operators are intended for commercial and industrial use to raise or lower sectional overhead doors by chain coupling or direct coupling to the door shaft. Jackshaft operators are suitable where all or part of the door remains in a vertical position when fully open such as doors with at least 18 inches of lift clearance or full vertical lift doors. Jackshaft operators may also be used with roll up service doors and grills when appropriately modified at the factory to obtain the correct speeds.

A jackhaft operator **DOES NOT LOCK THE DOOR IN ITS CLOSED POSITION.** However, because the cross-header shaft is prevented by the operator from turning, the torsion springs provide no assistance in lifting the door should an attempt be made to raise it manually.

The J & H Series jackshaft operators are used in the following applications:

- **Continuous Duty, Medium Cycle Commercial installations only**
- **Indoor Use Only**
- **Up to 24 foot high doors with a maximum area of 480 square feet for 3/4 HP, 280 square feet for 1/2 HP and 200 square feet for 1/3 HP - maximum area slightly higher for lighter doors - consult factory**
- **Use with foam/pneumatic reversing door edge or photoelectric device - REQUIRED where the 3-button station is out of sight of the door, or any other automatic, remote or manual control is used to activate the door**

OPTIONAL FEATURES:

Digital Radio Controls: Open, Close and Stop operation. Radio units are available to control up to 27 doors from one transmitter

Digital Timer to Close: Adjustable from 0 to 17 minutes in one second intervals.

Keyless Entry System: Connection terminals provided for hard wired or wireless keyless entry systems.

PREPARATION

WARNING

ELECTRIC DOOR OPENERS ARE DESIGNED FOR DOORS IN GOOD WORKING CONDITION, PROPERLY COUNTERBALANCED AND PROPERLY ADJUSTED IN ACCORDANCE WITH THE DOOR MANUFACTURER'S INSTALLATION INSTRUCTIONS.

Before starting the installation of the operator, the door must be in good working condition and properly counterbalanced. Inspect the door and track for loose or missing hardware. Test the door manually for balance and ease of operation. Lubricate door hinges and rollers. If necessary, employ a qualified technician to adjust the springs for proper counterbalance of the door.

Stops should be installed at the top end of each track to prevent the possibility of the door rollers moving beyond the ends of the track.

If the cross header shaft is made from hollow tubing rather than solid rod, it is recommended that it be plugged with a short length of solid bar for a more secure installation of the shaft sprocket or flange coupler.

Before removing the operator powerhead from the shipping carton, inspect the nameplate on the cover of the operator control box to verify that it is the correct model for the intended application and that the voltage and phase are in accordance with electrical power provided at the job site. If the operator was ordered with the optional chain hoist, Model H, see that it is so equipped. A chain hoist CANNOT be added in the field.

Warning: Rope off the area to keep personnel and vehicles clear of the door and floor space in the vicinity of the operator during the installation.

WARNING

SPRINGS ARE SUBJECT TO VERY HIGH FORCES AT ALL TIMES AND ADJUSTMENTS MUST BE MADE ONLY BY A QUALIFIED PROFESSIONAL DOOR INSTALLER.

WARNING

REMOVE OR DISABLE ANY LOCKING DEVICES FROM DOOR AND REMOVE ALL ROPES

COMPONENT IDENTIFICATION

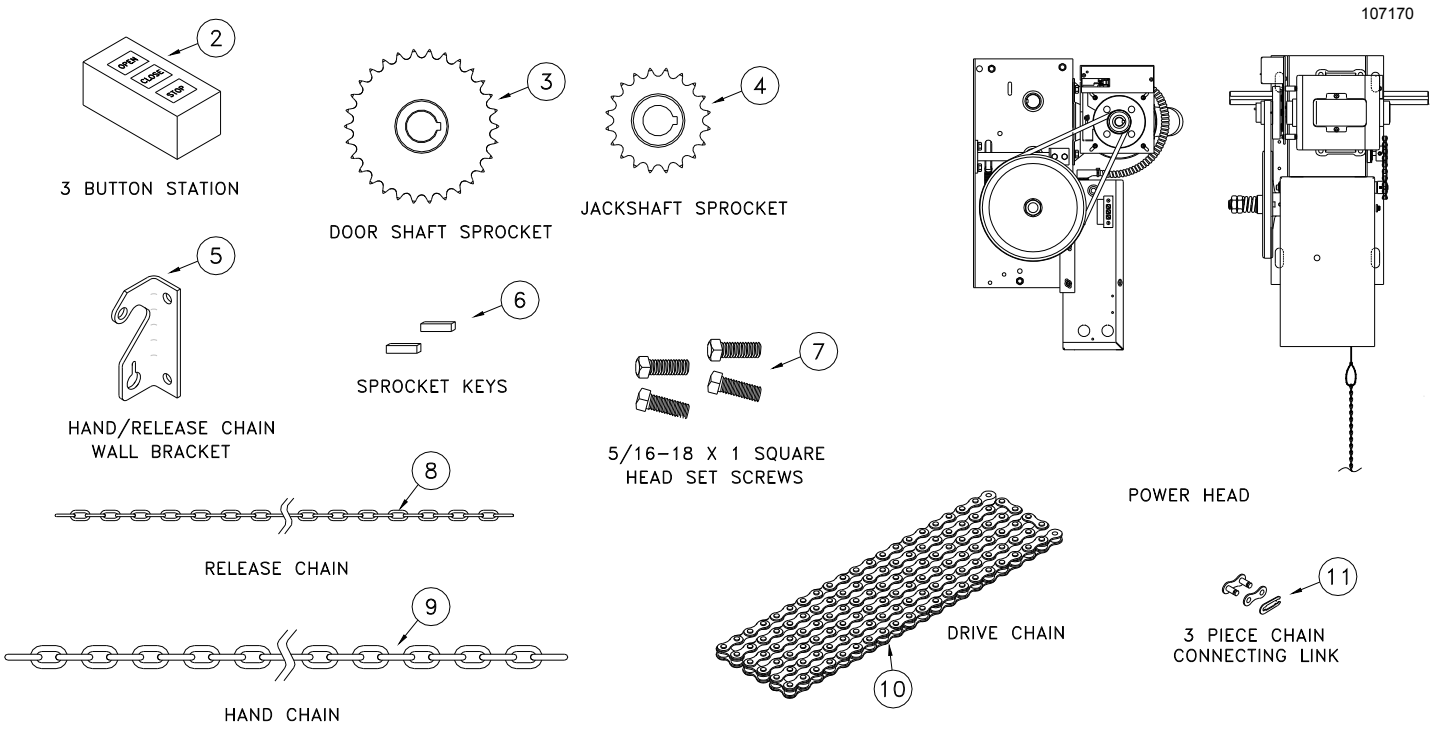

WARNING **TO REDUCE THE RISK OF SEVERE INJURY OR DEATH: READ AND FOLLOW ALL INSTALLATION INSTRUCTIONS!**

- **Install only on a properly balanced garage door. An improperly balanced door could cause severe injury. Have a qualified service person make repairs to cables, spring assemblies and other hardware before installing the opener.**
- **Remove all ropes and remove or make inoperative all locks (unless mechanically and/ or electrically interlocked to the power unit) that are connected to the garage door before installing the opener.**
- **Lightweight doors (fiberglass, aluminum etc.) must be reinforced to avoid door damage. Check the door manufacturer's instruction manual for a bracing procedure or the availability or a Reinforcement Kit.**
- **Allstar Models J and H are Commercial Vehicular Door Operators and as such are NOT recommended for pedestrian traffic. In installations where it is known that pedestrians will be nearby ensure a pedestrian door is available for entrance and exit to the building. In addition YOU MUST install an auxiliary entrapment protection device (reversing door edge or photoelectric beam device) as part of the compete operator system.**
- **Connect an auxiliary entrapment protection device (reversing edge or photoelectric device across the door opening). A device of this type is *STRONGLY ADVISED FOR ALL* commercial operator installations. An auxiliary entrapment protection device is *REQUIRED* when the three button control station is out of sight of the door or any other automatic or manual control is used.**
- **Install the opener at least 8 feet or more above the floor.**
- **Do not connect the opener to the source of power until instructed to do so.**
- **Locate the control station:**
  - **a) within sight of the door and;**
  - **b) at a minimum height of five feet above the floor and;**
  - **c) away from all moving parts of the door.**
- **Do not overtighten the clutch adjustment to compensate for a poorly working door.**
- **Securely attach any WARNING signs or placards to either the door or above the control station as directed (see page 11).**
- **After installing the opener, all safety features must be tested for proper operation (see page 16).**

COMPONENT IDENTIFICATION LISTING

ITEM	PART #	DESCRIPTION	QTY	ITEM	PART #	DESCRIPTION	QTY
1	Per Model	Operator Power Head	1	8	009149	Release Chain	AR
2	005031	3 Button St ation	1	9	100315	#3 Hand Chain - Precut to 26 FT	AR
3	105270	24 Tooth, #50 Chain Sprocket (Standard)	1	10	105349	#50 Drive Chain - 6 FT Long	1
4	105268	12 Tooth, #50 Chain Sprocket (Standard)	1	11	105351	#50 Chain Connecting Link	1
5	105193	Release/Hand Chain Wall Bracket	1				
6	100413	1/4" Square Key	2	AR - AS REQUIRED			
7	006119	5/16-18 x 1 Square Head Set Screw	4				

WARNING

SPRINGS, PULLEYS, CABLES AND MOUNTING HARDWARE USED TO BALANCE YOUR GARAGE DOOR ARE UNDER EXTREME TENSION AT ALL TIMES AND CAN CAUSE SEVERE INJURY OR DEATH IF DISTURBED. DO NOT ATTEMPT ADJUSTMENT.

Figure 6, page 8 illustrates several positions suitable for mounting the operator; right hand or left hand, either wall mount or ceiling mount.

CHAIN COUPLING MOUNTING

Refer to **Figure 2** (at right)**, Figure 1,** page 4 and **Figure 7**, page 9 for component identification and the operator mounting slot locations. Place the sprockets **[5]** and **[14]** on the chosen side of the torsion shaft of the door and on the corresponding end of the output shaft of the operator, see **Figure 3**. The sprockets should be kept as close as possible to the bearings. Fasten the connecting link to each end of the door chain and loop the chain over the sprocket **[5]** on the torsion shaft. Temporarily suspend the operator in its mounting position using the chain over the sprocket **[14]** at one end of the jackshaft and a rope or chain at the mid point (to support the operator weight). With the chain tight and straight and the jackshaft **parallel** with the torsion shaft, trace the mounting slot on the mounting surface then lower the operator to the floor.

IT IS ESSENTIAL THAT THE SURFACE SUPPORTING THE OPERATOR BE RIGID AND SECURE. FAILURE TO PROVIDE A FIRM MOUNTING SURFACE WILL RESULT IN DAMAGE TO THE DOOR TORSION SHAFT AND THE PREMATURE FAILURE OF THE OPERATOR.

If the construction permits, the operator should be mounted with 3/8 inch diameter bolts through the wall. If it is not feasible to go through the wall, then use lag bolts to fasten the operator to the mounting surface. Locate the four holes within the tracings of the slots made in the previous step at the positions which will allow for adjust-ment of the chain tension. After drilling the mounting holes and instal-ling lag shields, if necessary, bolt the operator to the mounting surface but do not completely tighten the bolts at this time. Check the alignment of the sprockets, adjust their positions on the shafts if necessary and tighten the set screws securely on both sprockets. pulling downward on the operator to remove slack from the chain, tighten the four mounting bolts.

Inspect the installation. There should be no slack in the chain but neither should it be under severe tension which might shorten the life of the bearings. If there is any flexibility in the system due to construction of the surface supporting the operator or noticeable deflection of the door shaft, it is advisable to install a shaft support between the operator jackshaft and the door shaft to prevent the loss of limit settings due to the possibility of the chain jumping over the sprocket teeth. Shaft supports are available from the factory.

If there isn't a keyway on the doorshaft, keep the sprockets aligned and drill a 5/16" hole through the door drive sprockets and door shaft. Insert roll pin, Item (2). See **Figures 3 & 4.**

BEFORE PROCEEDING WITH THE OPERATOR INSTALLATION AND SETTINGS, MAKE A FINAL CHECK FOR TIGHTNESS OF ALL MOUNTING HARDWARE AND SET SCREWS.

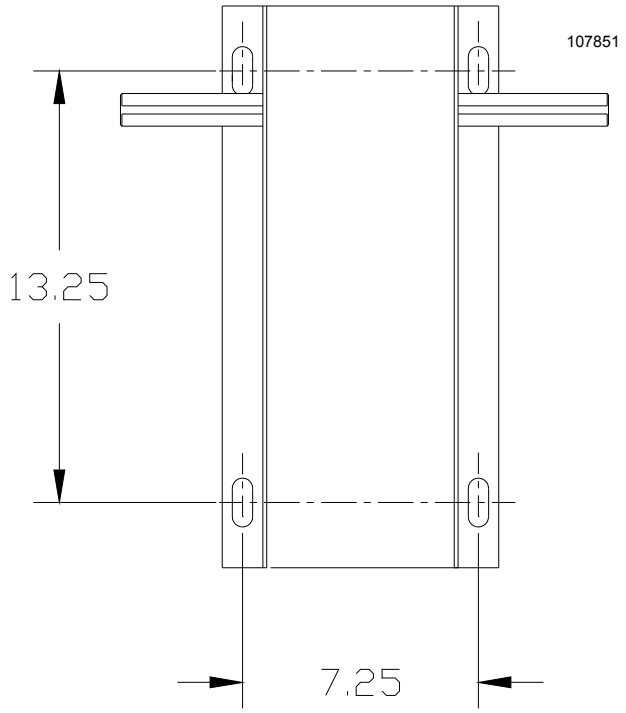

Figure 2

Proceed to "Chain Hoist and Floor Disconnect Installation".

CHAIN HOIST AND FLOOR DISCONNECT INSTALLATION

If the operator is furnished with a chain hoist (Model H), pass the hand chain over the chain wheel and through the chain guides on the operator clutch shaft (opposite end from the large pulley). Fasten the ends of the chain together by opening and re-closing one link using two pairs of pliers. If the chain is too long (standard length for 16 foot high doors and below is 26 feet total length of chain), shorten it to the desired length using the method described above and discard the unused portion.

Fasten the chain hoist holding bracket furnished with the operator to the wall approximately four feet from the floor. This bracket is also used to hold in place the release chain for both the chain hoist equipped units (Model H) and floor disconnect models (Model J).

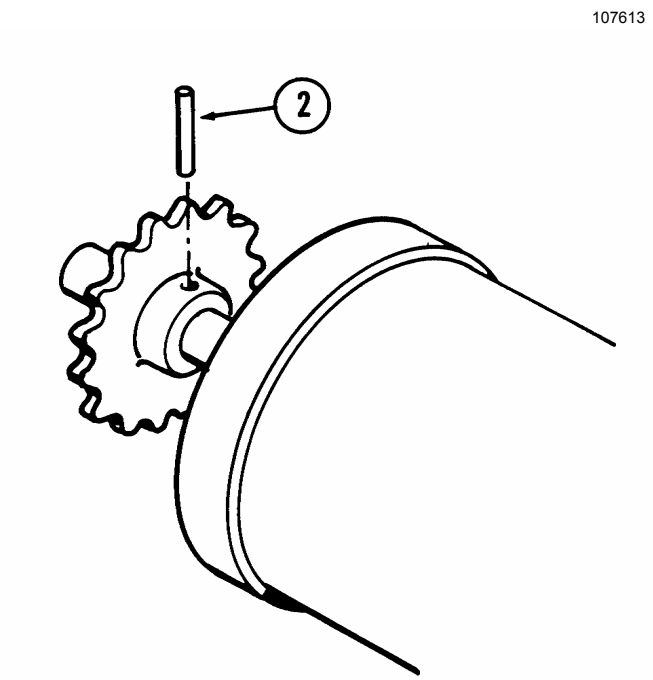

Figure 3

Figure 4

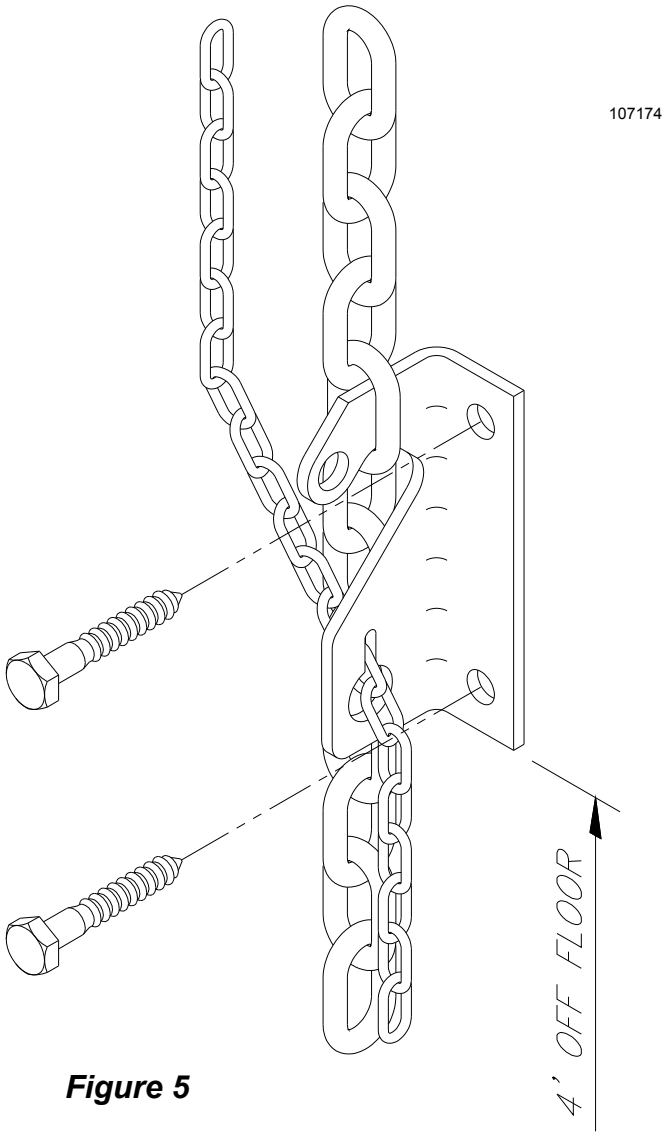

Figure 5

FIGURE 6 - OPERATOR MOUNTING POSITIONS

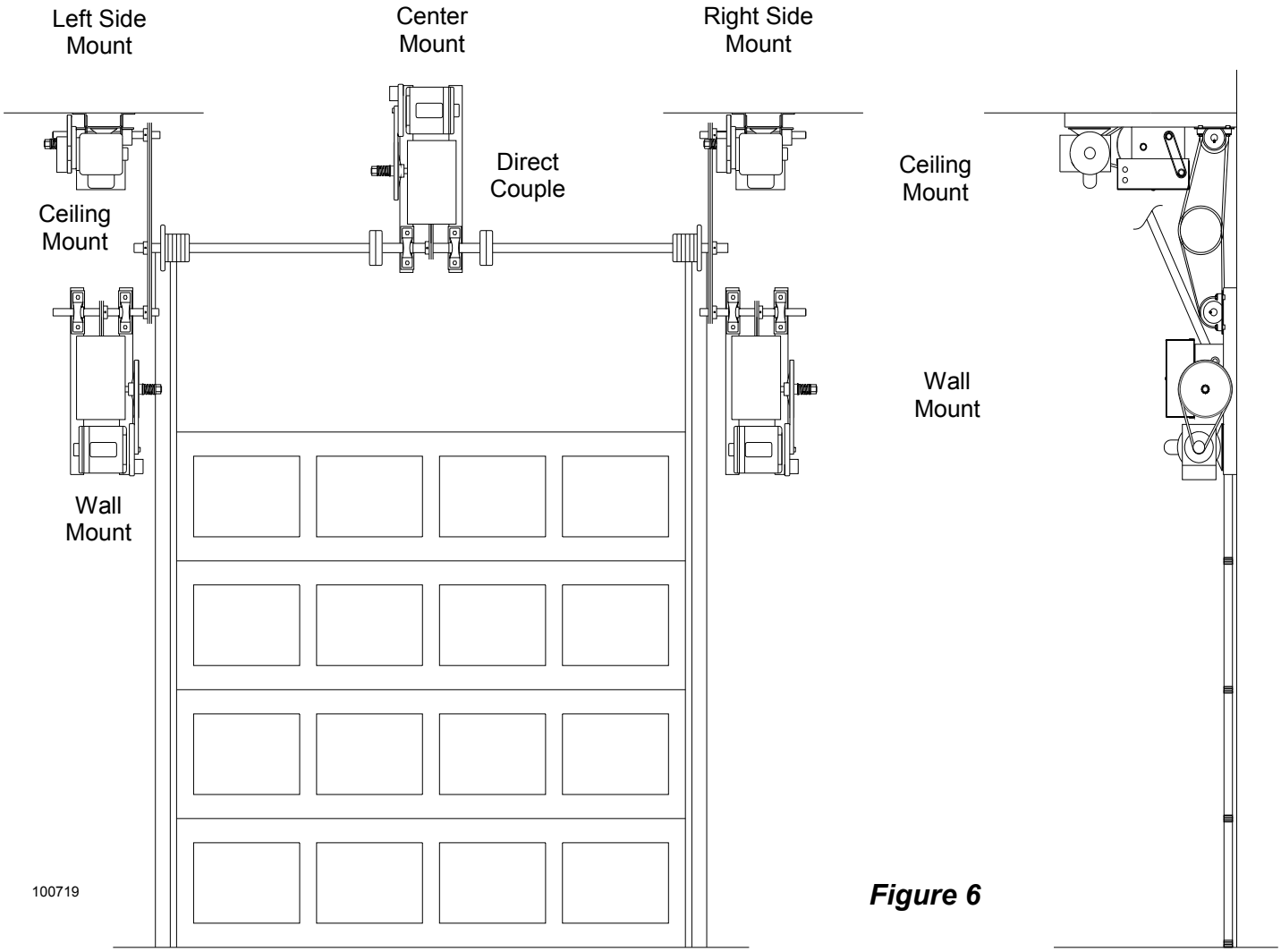

Figure 6

FIGURE 7 and 7A- OPERATOR DIMENSIONS

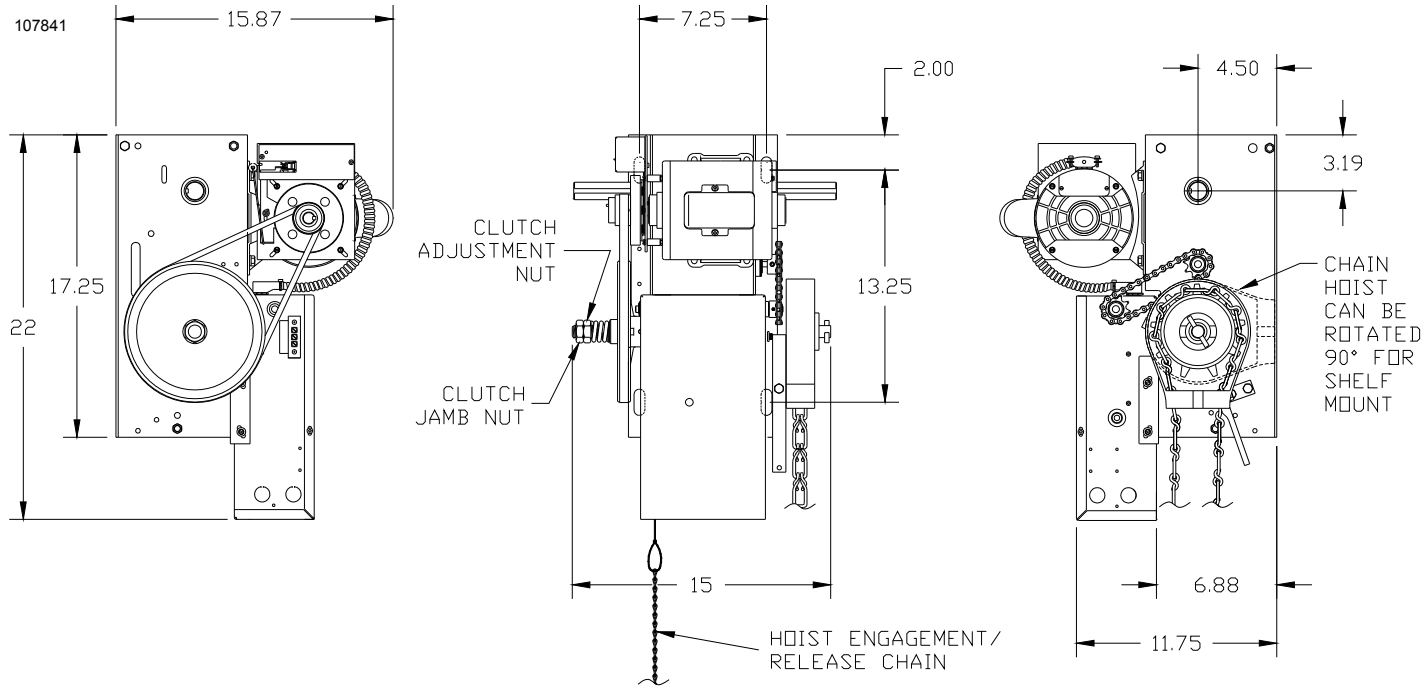

Figure 7 - Dimensions Model H

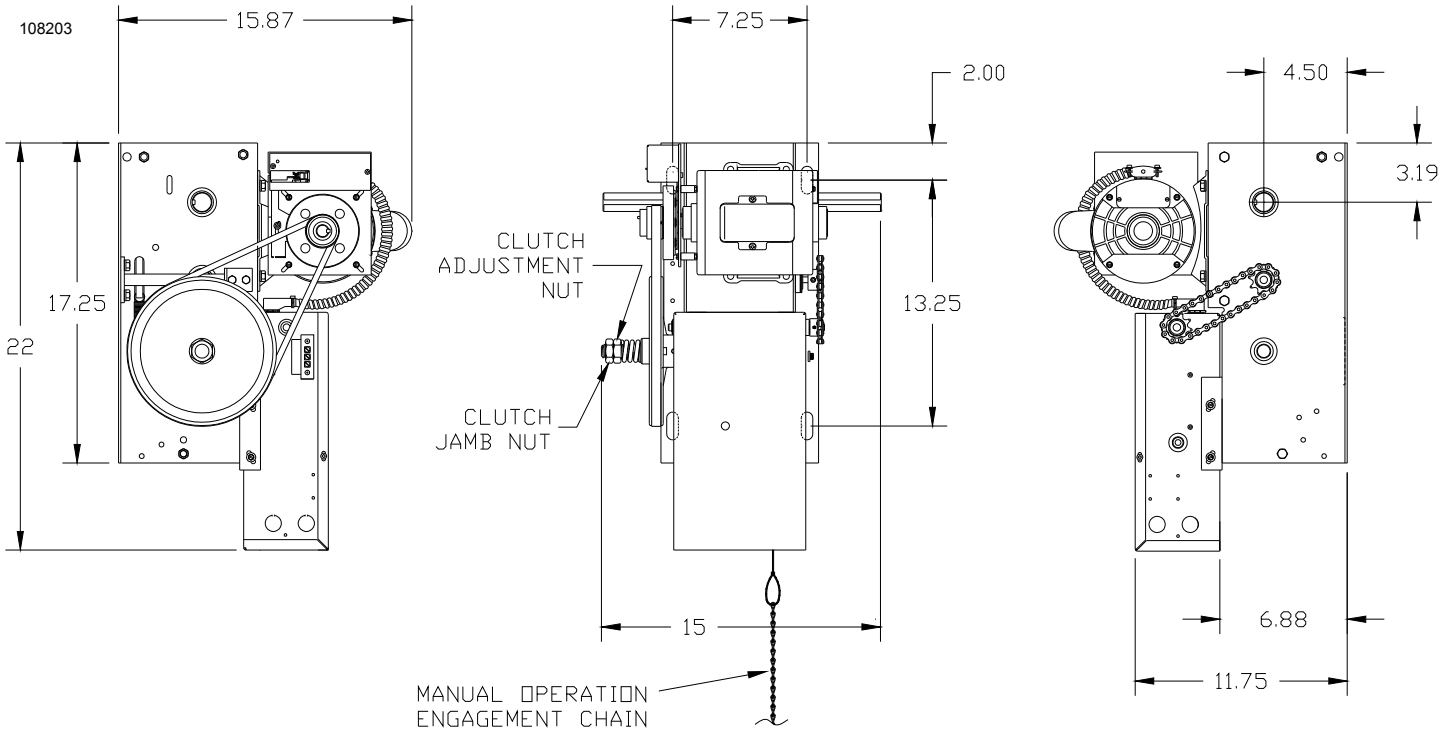

Figure 7A - Dimensions Model J

WARNING

TO AVOID RISK OF ENTRAPMENT AND POSSIBLE DAMAGE TO THE DOOR AND OPERATOR THE LIMITS MUST BE ADJUSTED BEFORE APPLYING POWER TO THE OPERATOR.

SETTING THE LIMIT SWITCHES

1) With the cover open on the electrical enclosure, reference Figure 8 below. There are four (4) switches (A, B, C, and D) mounted to the 'V' bracket (H). The limit switches are mounted in a fixed position to the underside of the 'V' bracket; with the Close Limit switch (B) on the right and the Open Limit switch (D) on the left. The Reverse Cutout switch (A) and the Single Button Selector switch (C, also could be Timer Engage switch depending on the model) are mounted to the top side of the 'V' bracket as shown. The switches are activated by the two limit nuts (E & G) on the threaded shaft which move laterally along the shaft as the operator opens and closes the door. When a limit nut nears the end of the shaft it activates a set of switches, upper switch first then the lower fixed limit switch.

2) Depress the Limit Nut Retention Plate (F) so it disengages from the slots in the limit nuts and move the Limit nuts to the center of the threaded shaft.

3) Manually raise the door to a nearly open position.

4) Depress the limit nut retaining bracket (F) so it disengages from the slots in the limit nuts. Turn the OPEN limit nut (E) on the shaft until it engages both the Single Button Selector switch (C) and the Open Limit Switch (D). You will need to listen for two audible clicks. Release the retaining bracket and be sure that it engages in slots of both limit nuts.

5) Manually lower the door to the fully closed position and repeat Step #3 with the Close Limit nut (G) and Reverse Cutout switch (A) and the Close Limit switch (B).

6) Manually move the door to a half open position. With the door in a mid position there will be time to stop the door if something or someone were in the door path when initially starting the door.

7) A final limit adjustment will be necessary after the connection of the power supply in order to ensure the door stops at the proper Open and Close positions.

8) Adjustment of the Reverse Cutout switch (A) or Single Button Selector switch (C) is done at the factory and should not be needed in the field. Moving the Reverse Cutout switch closer to the center of the box will increase the point where the reversing feature cuts out (to allow for irregularity in the floor, etc.). The reverse cutout point is factory adjusted to approx. 4 inches off the floor.

107102

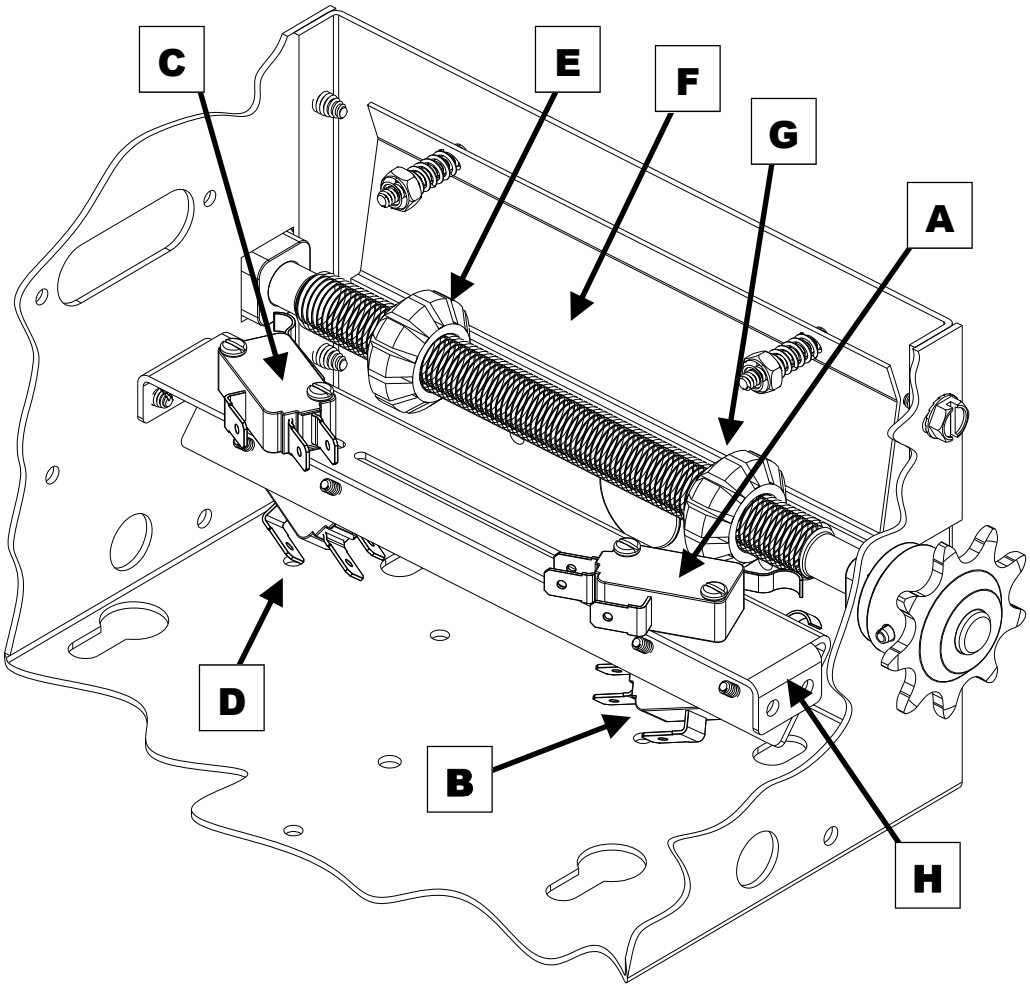

Figure 8
Limit Assembly

A - REVERSE CUTOUT SWITCH (LS4, ADJUSTABLE)
B - CLOSE LIMIT SWITCH (LS2, FIXED POSITION)
C - SINGLE BUTTON SELECTOR or TIMER ENGAGE SWITCH (LS3, ADJUSTABLE)
D - OPEN LIMIT SWITCH (LS1, FIXED POSITION)
E - OPEN LIMIT NUT
F - LIMIT NUT RETAINING BRCKT
G - CLOSE LIMIT NUT
H - "V" BRACKET

WARNING

TO PREVENT THE RISK OF PERSONAL INJURY OR DEATH :
- **DISCONNECT POWER AT THE FUSE BOX BEFORE PROCEEDING.**
- **ELECTRICAL CONNECTIONS MUST BE MADE BY A QUALIFIED INDIVIDUAL.**
- **OBSERVE LOCAL ELECTRICAL CODES WHEN WIRING THE OPERATOR.**

WARNING: Allstar's J & H Series operators have been designed and constructed for use with voltages from 115 Volts AC to 480 Volts AC, in single or three phase. Check the operator nameplate label on the control box cover for the proper voltage and phase. The application of an improper input voltage or phase will result in catastrophic failure to the internal electrical components.

Observe local electrical codes when wiring the operator.

When hard wiring, observe state and local electrical codes. A wiring diagram is attached to the inside of the control box cover. Connect the appropriate voltage and phase power leads to the appropriate terminals as per the wiring diagram and connect a ground wire to the grounding screw. On three phase units, incorrect phasing of the power supply will cause the motor to rotate in the wrong direction (open when CLOSE button is pushed and vice versa). To correct this, interchange any two of the incoming three phase conductors.

The wiring diagram attached inside the cover of the control box details all of the field wiring terminal connections for the operator. Always connect the wires to the push-button controls and auxiliary devices exactly as shown.

Warning: Control voltage of the operator is 24 volts AC, Class 2. Do not run the power leads and control circuit wiring in the same electrical conduit.
Note: Most J & H Series model operators are pre-wired for door reversing edge components. To comply with code requirements, the door reversing edge components must be installed and wired to the operator. Refer to Figure 9 and 10 for Edge component wiring and installation.

WARNING

TO PREVENT THE RISK OF PERSONAL INJURY AND/OR DAMAGE TO DOOR OR PROPERTY, ONLY OPERATE DOOR CONTROL WHEN DOOR IS IN CLEAR VIEW. IF CONTROL STATION CANNOT BE LOCATED WHERE THE DOOR IS VISIBLE OR IF ANY OTHER DEVICE IS USED TO CONTROL THE DOOR AN AUXILIARY ENTRAPMENT DEVICE (DOOR EDGE OR PHOTOELECTRIC) *MUST BE CONNECTED*.

WARNING

RISK OF ENTRAPMENT THAT MAY RESULT IN SERIOUS PERSONAL INJURY OR DEATH. DISCONNECT POWER TO THE OPENER BEFORE AND DURING INSTALLATION OF AN ACCESSORY REVERSING DOOR EDGE OR PHOTOELECTRIC DEVICE. DO NOT RECONNECT POWER TO OPENER UNTIL INSTRUCTED TO DO SO. ENSURE DOORWAY IS CLEAR BEFORE STARTING TESTING OF UNIT.

For operator models not equipped with reversing edge components **ONLY ONE THREE BUTTON WALL STATION AND NO OTHER MEANS OF CONTROL** may be used to control the operator. This is to comply with safety requirements. In this case the pushbutton station must be located **WITHIN CLEAR SIGHT OF THE DOOR** adjacent to a placard (supplied with the operator) with this wording:

WARNING
TO PREVENT ENTRAPMENT
DO NOT START DOOR DOWNWARD
UNLESS DOOR WAY IS CLEAR

Operators which are equipped with a reversing edge circuit may have one or more additional means of control which should be wired in accordance with the diagram supplied in the operator. To add a second three button station, refer to **Figure 10.**

Number 18 gauge wire or heavier must be used for wiring the control stations and auxiliary control devices to the operator. Smaller gauge wire will cause operational problems, especially when multiple push-button stations are used or during summer months.

CAUTION

TO AVOID DAMAGE TO DOOR AND OPERATOR ENSURE ALL DOOR LOCKS ARE DISABLED.
USE AN INTERLOCK SWITCH IF A LOCK IS REQUIRED TO RETAIN FUNCTIONALTY.

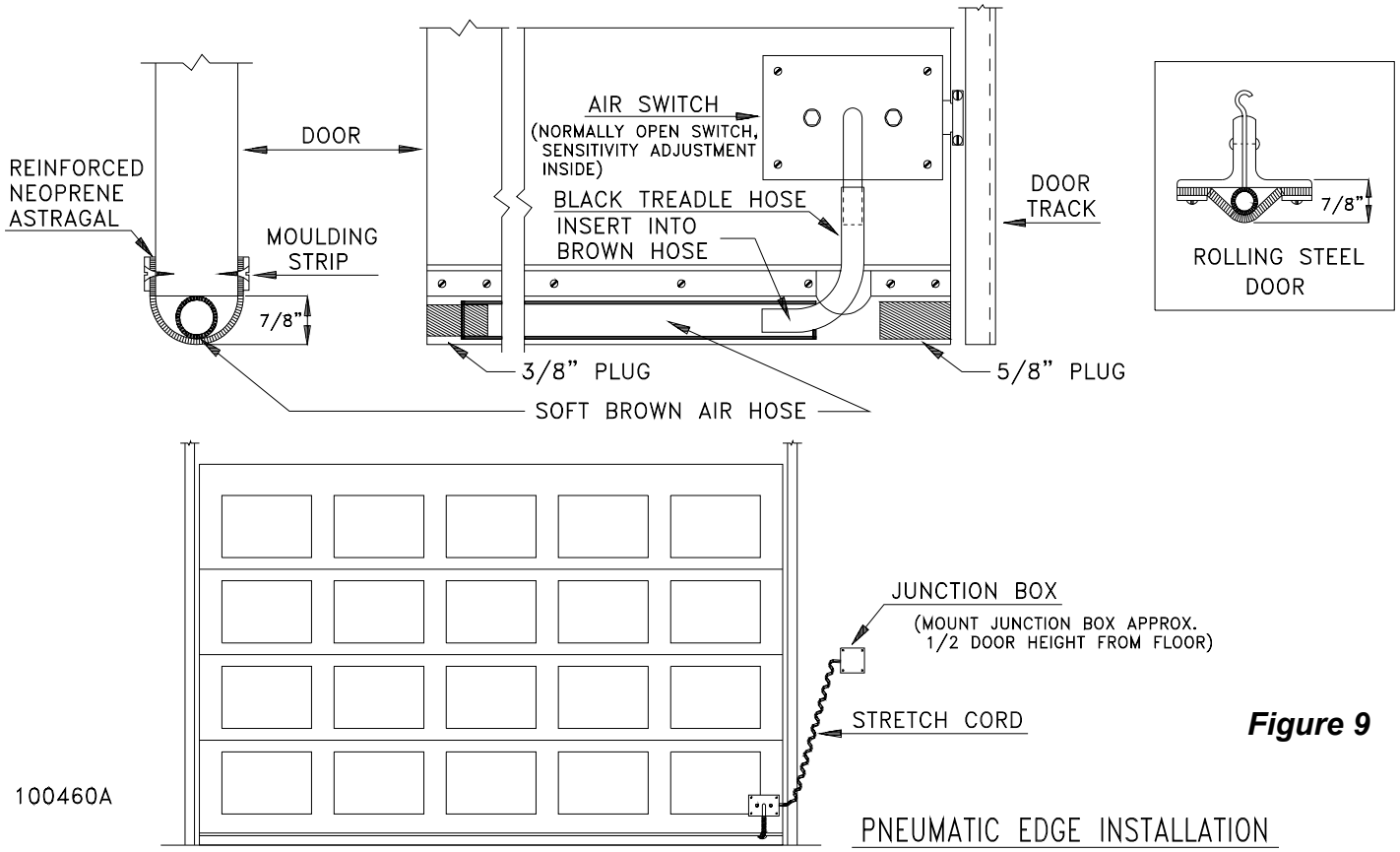

Figure 9

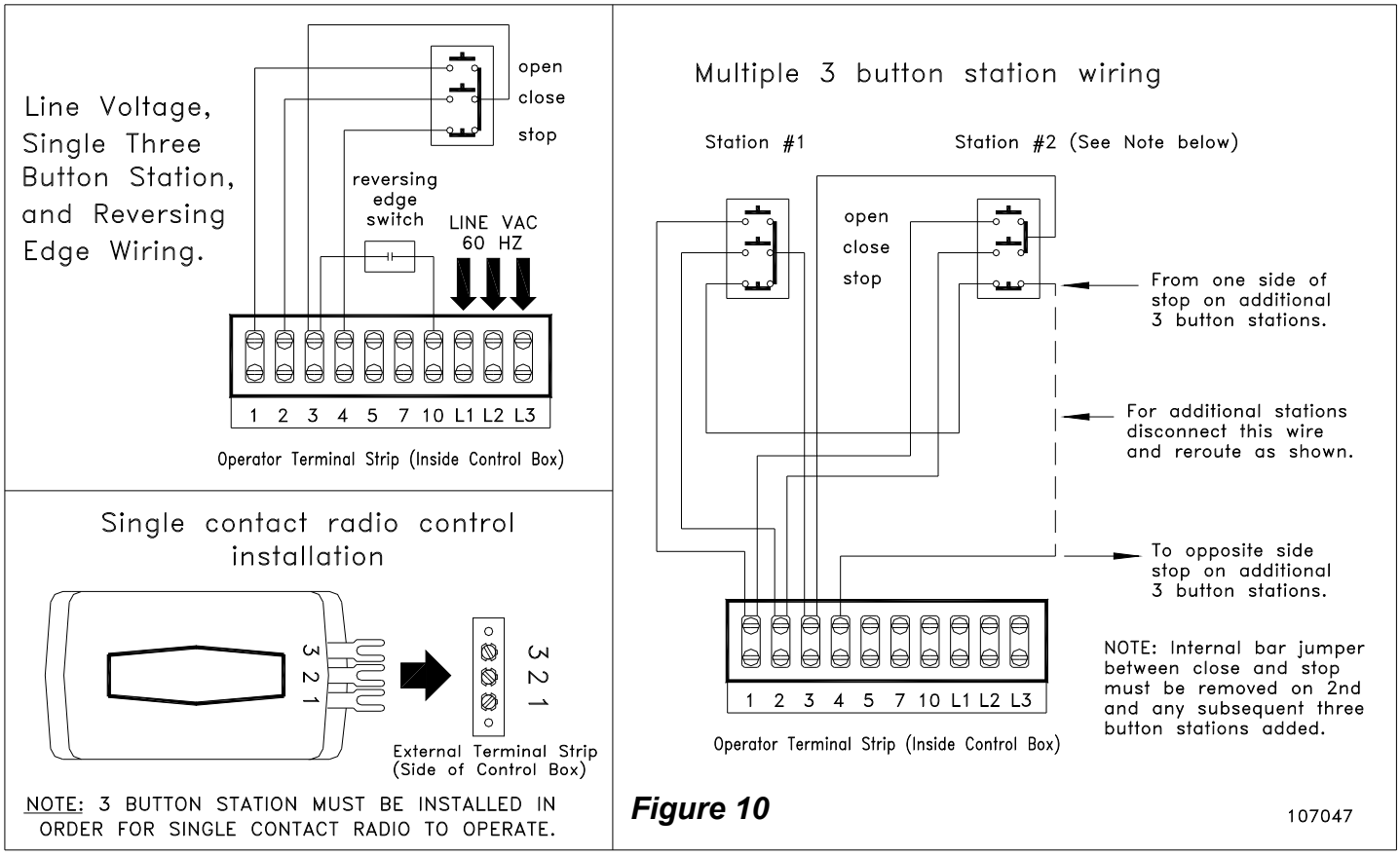

Figure 10

IMPORTANT SAFETY INSTRUCTIONS FOR OWNER

WARNING **TO REDUCE THE RISK OF SEVERE INJURY OR DEATH: READ AND FOLLOW ALL INSTRUCTIONS!**

- **NEVER let children operate or play with door controls. Keep the Remote Control away from children.**
- **ALWAYS keep a moving door in sight and keep people and objects away from the door area until the door is completely closed. NO ONE SHOULD CROSS THE PATH OF A MOVING DOOR.**
- **TEST THE DOOR OPENER'S REVERSING FEATURE (where applicable) MONTHLY. The door MUST reverse upon contact with a 4" high object on the floor. After adjusting the force setting (clutch) or the limit of travel, ALWAYS RETEST the Opener. Failure to ADJUST THE OPENER PROPERLY may result in SERIOUS INJURY OR DEATH.**
- **DO NOT over adjust the force setting (clutch) to compensate for a poorly working door. See page 16 for procedure to check the door operation and page 14 for proper clutch adjustment.**
- **If possible, USE THE MANUAL RELEASE only when the door is closed. Use caution when using the Release with the door open. WEAK OR BROKEN SPRINGS MAY ALLOW THE DOOR TO CLOSE RAPIDLY, CAUSING SEVERE INJURY OR DEATH.**
- **KEEP THE GARAGE DOOR PROPERLY BALANCED. See the door owner's manual. An improperly balanced door MAY CAUSE SEVERE INJURY OR DEATH. Have a QUALIFIED SERVICE PERSON MAKE REPAIRS TO CABLES, SPRING ASSEMBLIES AND OTHER HARDWARE.**
- **SAVE THIS INSTRUCTION MANUAL FOR END USER.**

NOTE: It is now necessary to turn on the power in order to run the Opener to check for proper operation and limit settings. Before doing so, ensure that all mounting hardware are installed and properly tightened, that all electrical connections are per local code requirements, and that proper wiring practices have been followed. **Also, double-check that all ropes have been removed from the door and that the doorway is clear.**

WARNING

AVOID ELECTROCUTION:
DO NOT ROUTE LOW VOLTAGE WIRES IN SAME CONDUIT AS HIGH VOLTAGE WIRES. FOLLOW ALL LOCAL ELECTRICAL CODES OR THE NATIONAL ELECTRICAL CODE (NEC).

WARNING

FAILURE TO TEST REVERSING SYSTEM COULD RESULT IN DEATH OR SERIOUS INJURY. TEST THIS SYSTEM ONCE A MONTH.

WIRING TERMS

MOMENTARY CONTACT: Button can be pushed and then released and door will keep moving or stop without maintaining pressure on the button.

CONSTANT PRESSURE: Constant pressure is required on the button in order for continued door movement. When the button is released the door will stop and possibly reverse to full open depending on wiring type.

DOOR EDGE/PHOTOELECTRIC INPUT: The operator wiring provides for input from an optional pneumatic or electric door bottom edge or photoelectric device that will cause a closing door to stop and may reverse it to open depending on the wiring type.

OPEN OVERRIDE: When the door is closing a momentary push of the OPEN button will reverse the door to open.

NOTE: Check the marking on the operator outer carton and the wiring diagram on the inside control box cover for the wiring type.

B WIRING
To Open - Momentary Contact
To Close - Momentary Contact
To Stop- Momentary Contact

B1 WIRING
To Open - Momentary Contact
To Close - Momentary Contact
To Stop- Momentary Contact
Door Edge/Photoelectric Input will ***stop*** the door when closing.

B2 WIRING
To Open - Momentary Contact
To Close - Momentary Contact
To Stop- Momentary Contact
Open Override- Standard
Door Edge/Photoelectric Input will reverse a closing door to full open - door can be stopped with the STOP button at all times.

C WIRING
To Open - Momentary Contact
To Close - Constant Pressure:
Door will stop if pressure is released from CLOSE button
To Stop- Momentary Contact

C1 WIRING
To Open - Momentary Contact
To Close - Constant Pressure:
Door will stop if pressure is released from CLOSE button
To Stop- Momentary Contact
Door Edge/Photoelectric Input will ***stop*** the door when closing.

D WIRING
To Open - Momentary Contact
To Close - Constant Pressure
To Stop- Door will stop if pressure is released or when the opener activates a limit switch at full open or full closed.

E WIRING
To Open - Momentary Contact
To Close - Constant Pressure:
If pressure is released door will reverse to full open
To Stop- Door will stop when the opener activates a limit switch at full open or full closed. Door cannot be stopped in mid travel.

E2 WIRING
To Open - Momentary Contact
To Close - Constant Pressure:
If pressure is released door will reverse to full open
To Stop- Door will stop when the opener activates a limit switch at full open or full closed. Door cannot be stopped in mid travel.
Door Edge/Photoelectric Input will reverse a closing door to full open and door cannot be stopped.

R2 WIRING
To Open - Momentary Contact
To Close - Momentary Contact
To Stop- Momentary Contact
Open Override- Standard
Optional Single Button Radio Control Input will open or close door but will not stop the door.

T1 WIRING
To Open - Momentary Contact
To Close - Momentary Contact
To Stop- Momentary Contact
Open Override- Standard
Door Edge/Photoelectric Input will reverse a closing door to full open - door can be stopped with the STOP button at all times..
Optional Adjustable Timer closes the door automatically. Time interval resets when open button, open override, door edge or auxiliary control is activated.
Optional Defeat Switch locks out timer when not required.

T2 WIRING
To Open - Momentary Contact
To Close - Momentary Contact
To Stop- Momentary Contact
Door Edge/Photoelectric Input will reverse a closing door to full open - door can be stopped with the STOP button at all times..
Optional Adjustable Timer closes the door automatically. Time interval resets when door edge or auxiliary control is activated. OPEN button will not start or reset timer.
Optional Defeat Switch locks out timer when not required.

CLUTCH ADJUSTMENT

WARNING

RISK OF ENTRAPMENT THAT MAY RESULT IN SERIOUS PERSONAL INJURY OR DEATH. DISCONNECT POWER TO THE OPENER BEFORE SERVICING OR MAKING ADJUSTMENTS. ENSURE DOORWAY IS CLEAR BEFORE STARTING TESTING OF UNIT.

CAUTION

ALWAYS DISCONNECT POWER TO OPERATOR BEFORE SERVICING OR MAKING ADJUSTMENTS

The clutch serves to protect the door, the electric operator and other equipment from undue stress or damage caused by starting forces and/or an obstruction to the door. It should be set no tighter than is necessary to smoothly and consistently move the door throughout its full range of travel. When properly set, it will slip freely if the door should encounter an obstruction, and it should be possible to stop the travel of the door by hand.

WARNING: Before adjustment remove power to the operator.

To adjust the clutch, loosen the jamb nut, and turn the adjusting nut, as shown at right Make adjustments in 1/4 turn increments. Always re-tighten the jamb nut before running the operator to prevent clutch from changing its setting.

CAUTION
NEVER COMPRESS CLUTCH SPRING BEYOND POINT LIMITED BY THE DESIGN OF THE OPERATOR OR REPLACE IT WITH A HEAVIER SPRING

Due to changing conditions of the door and normal wear, it may be necessary to occasionally readjust the clutch to obtain dependable operation.

WARNING: BEFORE DOING SO BE CERTAIN THAT THE DOOR IS IN GOOD WORKING CONDITION, PROPERLY COUNTERBALANCED AND THAT THE CLUTCH IS NOT SLIPPING BECAUSE OF LOOSE OR MISSING HARDWARE, BINDING IN THE TRACK, RUBBING AGAINST THE DOOR STOPS OR DEFECTIVE OR MISADJUSTED SPRINGS. ANY SERVICE REQUIRED TO THE DOOR, DOOR SPRINGS OR DOOR OPERATOR MUST BE PREFORMED BY A QUALIFIED PROFESSIONAL DOOR INSTALLER.

The clutch pad will wear during normal operation and should be replaced when it becomes difficult or impossible to sufficiently tighten the clutch to obtain smooth operation of the door when it is in good working condition. To replace the clutch pad, first loosen the motor mounting bolts and remove the V-belt then the clutch adjusting nuts, spring and clutch pulley. Check condition of V-belt before reassembly and replace if required. After reassembly, adjust clutch as described above.

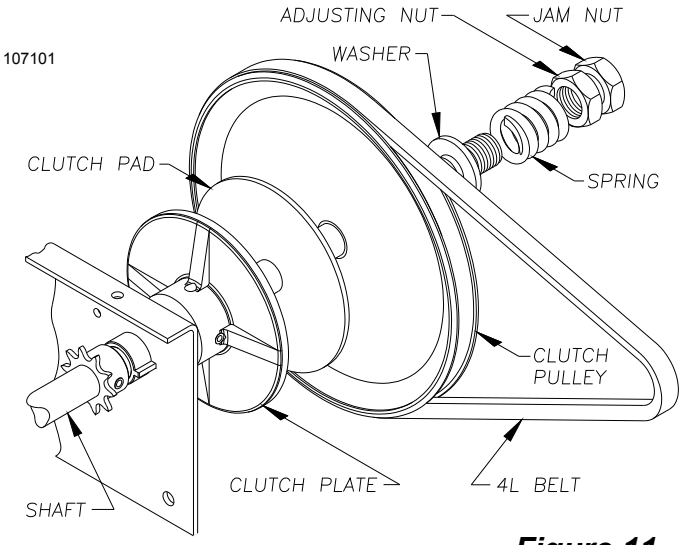

Figure 11

WARNING

IMPROPER ADJUSTMENT OF CLUTCH SETTING COULD CAUSE ENTRAPMENT, INJURY OR DEATH.
SET CLUTCH ADJUSTMENT FOR JUST ENOUGH FORCE TO OPERATE THE DOOR RELIABLY, BUT NO STRONGER. Contact a service professional to correct any binding, sticking or other door problems. DO NOT OVER-ADJUST CLUTCH SETTING TO COMPENSATE FOR A POORLY WORKING DOOR.

BRAKE ADJUSTMENT

The solenoid operated brake may require occasional adjustment. Adjustment is necessary if door tends to drift downward after reaching the open limit. Follow the instructions below and use Figure 12 as a guide.

(1) Loosen shoe adjusting screw and bottom bracket arm of solenoid.

(2) Move tab until drum has a slight drag.

(3) Reverse drag slightly from tab and tighten shoe adjustment screw.

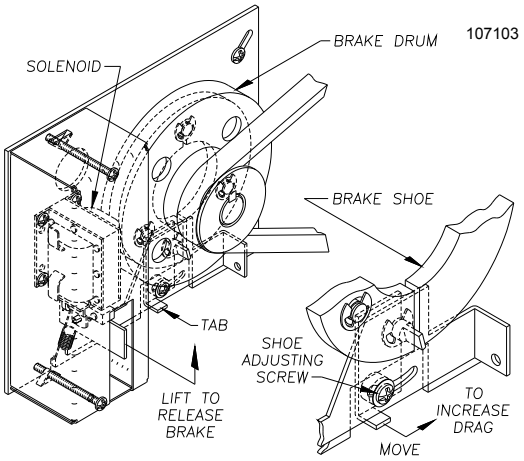

Figure 12

TESTING

Following installation, the operator MUST be tested and respond correctly to all controls as specified on the wiring diagram. KEEP personnel and equipment clear of the area beneath the door when performing the tests. When testing the 3-button wall station, first observe that each button operates the door in the direction indicated and that the STOP button performs that function. With the door stopped at its full open position, the OPEN button should be inoperative. This should be verified and, likewise, the CLOSE button should be inoperative with the door fully closed.

Certain operator control circuits use only a single button or a two button control station and may be designed to function differently than the more common three-button circuit described above. Test the controls in accordance with the description of operation as indicated on the wiring diagram and on page 14, Wiring Types.

Observe the door when traveling in each direction for smoothness of operation. Test the setting of the clutch by restraining the door by hand. The clutch should slip. Re-check the limit settings. The door should close tightly at the floor without excessive impact. Likewise, it should fully clear the door opening without the carrier striking the stops on the rail.

The J & H series operators are equipped with a reversing edge circuit and to conform with code need to be connected to a pneumatic edge or foam edge door components. To test it for proper reversal, place an object beneath the leading edge of the door. The door should instantly reverse when it comes into contact with the object provided the height of the object exceeds the cut out point built into the close limit switch (approximately four inches).

CAUTION
DO NOT STAND UNDER DOOR TO TEST REVERSING EDGE USE A CORRUGATED BOX OR OTHER SIMILAR OBJECT

If the operator is equipped with other means of control, such as additional 3 button stations or radio controls, each of these should be tested separately for proper operation.

To test the manual disconnect first move the door to the fully closed position. Then disconnect the power to the operator. Manual door operation mode should engage when the release chain is pulled. The door can then be manually opened or closed by physically moving the door (Model J) or using the hoist chain (Model H). If it is difficult to engage and/or the jackshaft to doorshaft chain appears to be under compression, reset the CLOSE limit slightly to reduce the door travel in the close direction.

WARNING

ALWAYS DISCONNECT POWER TO THE OPERATOR BEFORE SERVICING, CONNECTING ACCESSORY DEVICES OR MAKING ADJUSTMENTS.

Normally, very little maintenance is required. A monthly visual inspection must be made for loose or missing hardware and for excessive slack in the V-Belt and jackshaft chain. The clutch must be tested periodically and adjustments made if necessary (see page 15). The brake is adjusted at the factory and will need periodic adjustment for wear. When adjustment becomes necessary see **Figure 12** on page 16 for the adjustment procedure.

Test the reversing edge circuit at least once a month by permitting the door to contact an obstruction while closing.

CAUTION
DO NOT STAND UNDER DOOR TO TEST REVERSING EDGE - USE A CORRUGATED BOX OR OTHER SIMILAR OBJECT

Lubrication of the operator is not required. It is important, for trouble free service from the operator, that the door be kept free from binding, properly counter balanced and periodically lubricated. **An annual inspection of the door by a qualified overhead door professional is recommended.**

Warning: Repairs and adjustments to the door and operator should be performed only by someone qualified to service commercial overhead doors and operators.

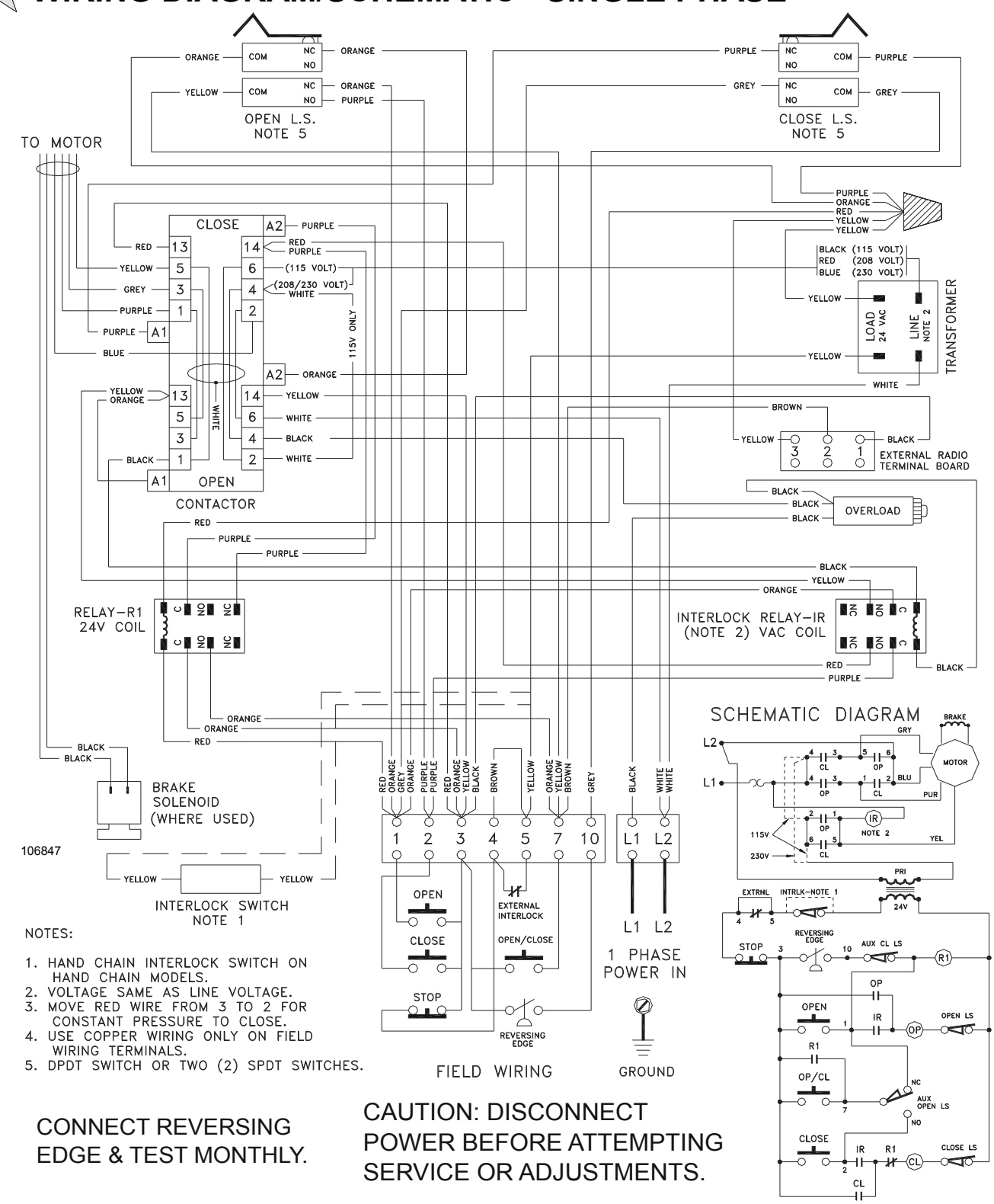

NOTES:

1. HAND CHAIN INTERLOCK SWITCH ON HAND CHAIN MODELS.
2. VOLTAGE SAME AS LINE VOLTAGE.
3. MOVE RED WIRE FROM 3 TO 2 FOR CONSTANT PRESSURE TO CLOSE.
4. USE COPPER WIRING ONLY ON FIELD WIRING TERMINALS.
5. DPDT SWITCH OR TWO (2) SPDT SWITCHES.

CONNECT REVERSING EDGE & TEST MONTHLY.

CAUTION: DISCONNECT POWER BEFORE ATTEMPTING SERVICE OR ADJUSTMENTS.

SINGLE PHASE MOTOR WIRING CHART

(EPD) - ALLSTAR SERIES T, J, AND H
(AU) - ALLSTAR SERIES AUD, AUJ, AND AUH

A.O. SMITH

115V 1P 230V 1P (312 SERIES)

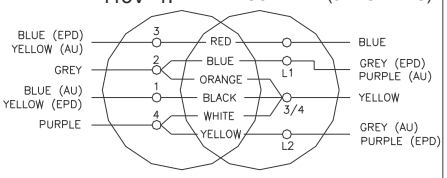

IF USED, CONNECT BRAKE WIRES TO 2 & 4 (115V); L1 & L2 (230V).
TO REVERSE MOTOR, SWITCH LEADS 1 & 3 (115V); L1 & L2 (230V).

BALDOR

DUAL VOLTAGE MOTOR - 115V 1P

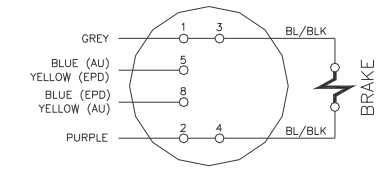

TO REVERSE MOTOR DIRECTION, SWITCH INCOMING LEADS TO TERMINALS 5 AND 8.

BALDOR

DUAL VOLTAGE MOTOR - 230V 1P

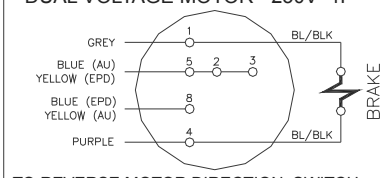

TO REVERSE MOTOR DIRECTION, SWITCH INCOMING LEADS TO TERMINALS 5 AND 8.

107304

WIRING DIAGRAM/SCHEMATIC - THREE PHASE

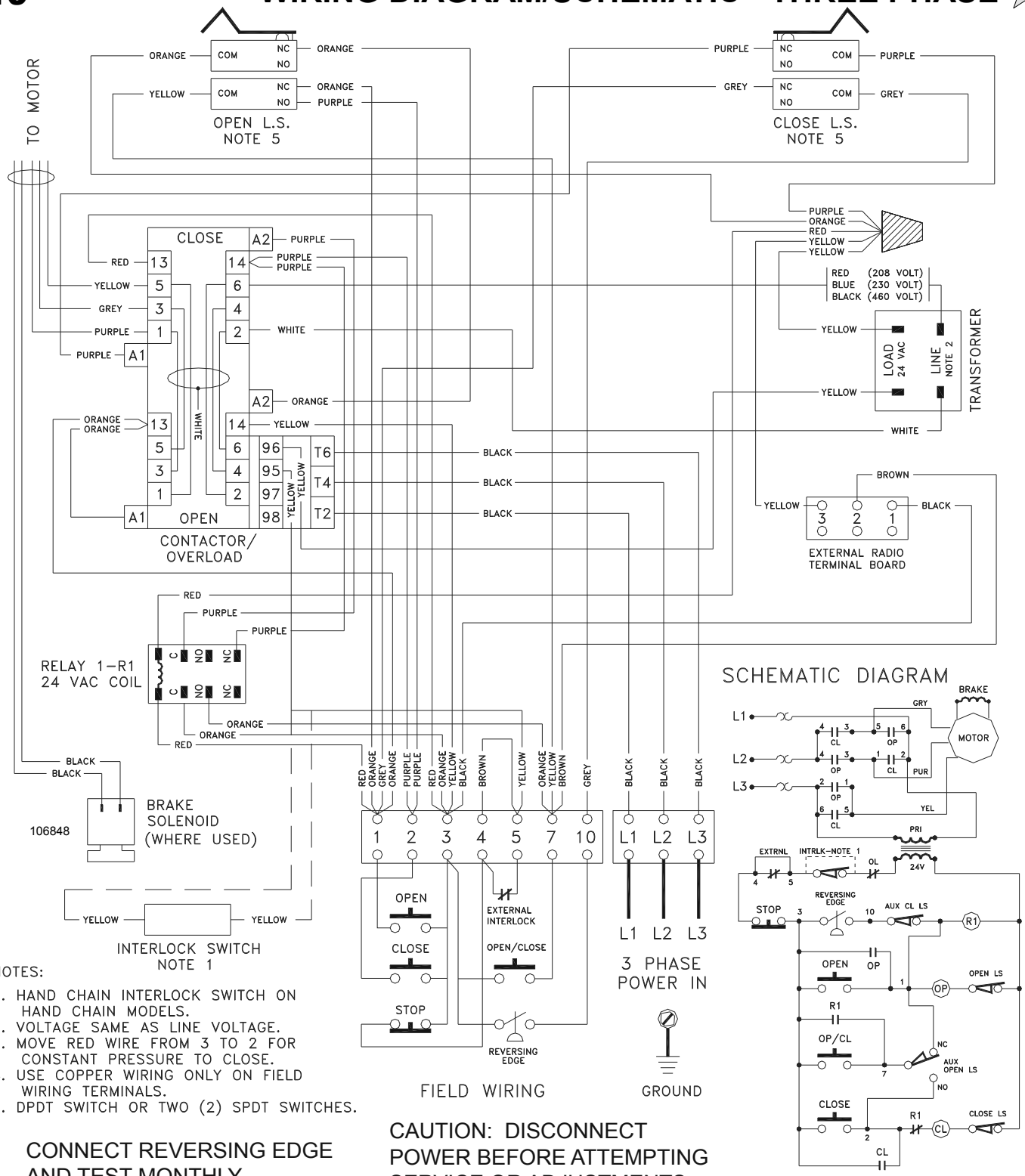

NOTES:

1. HAND CHAIN INTERLOCK SWITCH ON HAND CHAIN MODELS.
2. VOLTAGE SAME AS LINE VOLTAGE.
3. MOVE RED WIRE FROM 3 TO 2 FOR CONSTANT PRESSURE TO CLOSE.
4. USE COPPER WIRING ONLY ON FIELD WIRING TERMINALS.
5. DPDT SWITCH OR TWO (2) SPDT SWITCHES.

CONNECT REVERSING EDGE AND TEST MONTHLY.

CAUTION: DISCONNECT POWER BEFORE ATTEMPTING SERVICE OR ADJUSTMENTS.

3 PHASE MOTOR WIRING CHART

(EPD) - ALLSTAR SERIES T, J, AND H
(AU) - ALLSTAR SERIES AUD, AUJ, AND AUH

230 VOLTS, 3 PHASE
DUAL VOLTAGE MOTOR

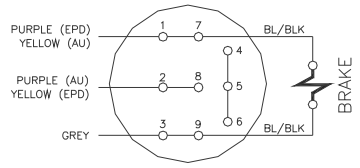

TO REVERSE MOTOR DIRECTION, SWITCH ANY TWO INCOMING LEADS.

460 VOLTS, 3 PHASE
DUAL VOLTAGE MOTOR

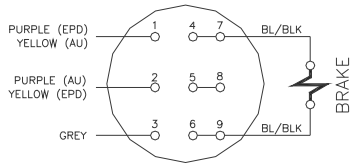

TO REVERSE MOTOR DIRECTION, SWITCH ANY TWO INCOMING LEADS.

575 VOLTS, 3 PHASE
SINGLE VOLTAGE MOTOR

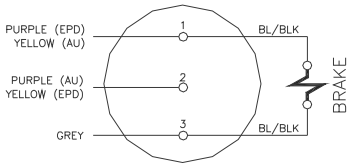

TO REVERSE MOTOR DIRECTION, SWITCH ANY TWO INCOMING LEADS.

107304

Manufacturer's Limited Warranty

Linear LLC warrants its Allstar brand commercial door operators to be free from defect in material and workmanship for a period of two (2) years from the date of purchase. To obtain service contact your dealer.

To obtain service under this warranty the buyer must obtain authorization instructions for the return of any goods from Linear before returning the goods. The goods must be returned with complete identification, with copy of proof-of-purchase, freight prepaid and in accordance with Linear's instructions or they will not be accepted. In no event will Linear be responsible for goods returned without proper authorization or identification.

Goods returned to Linear for warranty repair within the warranty period, which upon receipt by Linear are confirmed to be defective and covered by this limited warranty, will be repaired or replaced at Linear's sole option, at no cost and returned pre-paid. Defective parts will be repaired or replaced with new or factory rebuilt parts at Linear's sole option.

This limited warranty does not cover non-defect damage, damage caused by unreasonable use, damage caused by improper installation or care, vandalism or lightning, fire or excessive heat, flood or other acts of God (including, but not limited to misuse, abuse or alterations, failure to provide reasonable and necessary maintenance), labor charges for dismantling or reinstalling a repaired or replaced unit, or replacement batteries.

These warranties are in lieu of all other warranties, either expressed or implied. All implied warranties of merchantability and/or fitness for a particular purpose are hereby disclaimed and excluded. Under no circumstances shall Linear be liable for consequential, incidental or special damages arising in connection with the use or inability to use this product. In no event shall Linear's liability for breach of warranty, breach of contract, negligence or strict liability exceed the cost of the product covered hereby. No person is authorized to assume for Linear any other liability in connection with the sale of this product.

This warranty gives you specific legal rights. You may also have other rights which vary from state to state. Warranty effective after October 1st, 2007.

For Information:
877-441-9300 800-421-1587 www.allstarcorp.com

This Door Operator is built in the USA and complies with all requirements of ANSI/UL Standard 325.

Copyright © 2007 Linear LLC