AM-MIO

Input-Output Expansion Interface

For Use With the AM-3, AE-1000, & AE-2000 Access Control Systems

Installation Instructions

Linear®
(760) 438-7000
USA & Canada (800) 421-1587 & (800) 392-0123
Toll Free FAX (800) 468-1340
www.linearcorp.com

PRODUCT DESCRIPTION

The AM-MIO is an expandable input/output interface designed for use with Linear's AM-3, AE-1000, & AE-2000 access control systems. Housed in a lockable cabinet, the basic AM-MIO consists of two modules: a power supply module (PSM) and a relay/loop module (RLM). Up to three additional RLM modules can be added to fill the five-position module "rack". Each RLM module provides six Form "C" (normally open & normally closed) 5-amp relays for outputs and eight supervised loop terminals for inputs. With four RLM modules, the AM-MIO is capable of controlling 24 relay outputs and 32 loop inputs. Each module has a rotary switch to select its unique remote device address. The device address identifies each module to the system. Each module is interconnected to the controller by daisy-chained cables.

Pushbuttons on the RLM module are provided for manually triggering each relay for testing. Each relay has a red LED light to show when it's energized. A two-color red/green LED on the RLM module displays the status of the loop inputs. If all eight loops are "normal" (not shorted or open) the indicator is green. If any of the eight loops are "abnormal" (shorted or open) the indicator is red.

The power supply module distributes power to the RLM module(s). An external 16 VAC transformer powers the supply and provides charging current for a 12-volt backup battery (up to 7 amp/hour capacity). Indicators on the power supply module display its status. The green indicator lights when AC power is present and blinks when AC power is absent. The yellow indicator lights when the backup battery is low. Special power circuitry prevents fully discharging the backup battery. The status of the power supply is checked regularly by the controller. The red DATA indicator lights when data transfers. The red TAMPER indicator lights and the controller is signaled when the optional magnetic tamper switch detects that the cabinet has been opened.

CABINET COMPONENTS

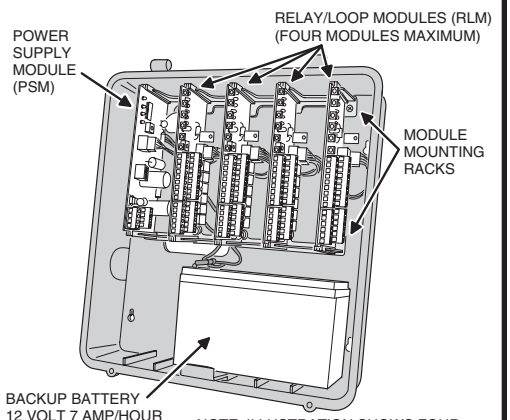

NOTE: ILLUSTRATION SHOWS FOUR RELAY/LOOP MODULES, ONLY ONE MODULE IS INCLUDED WITH THE AM-MIO

MODULE FEATURES

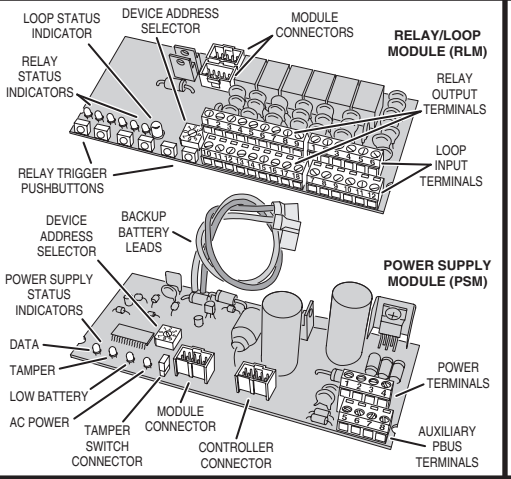

KEY LOCK INSTALLATION (OPTIONAL)

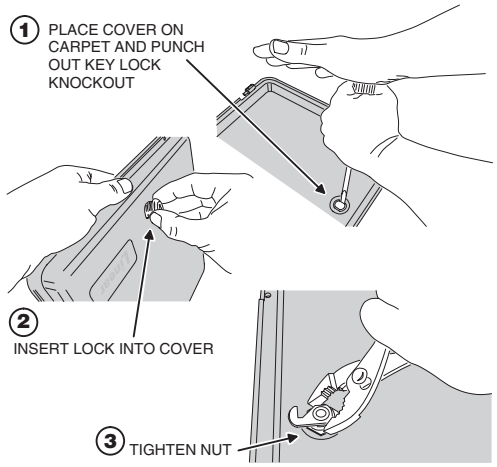

REMOVING MODULES

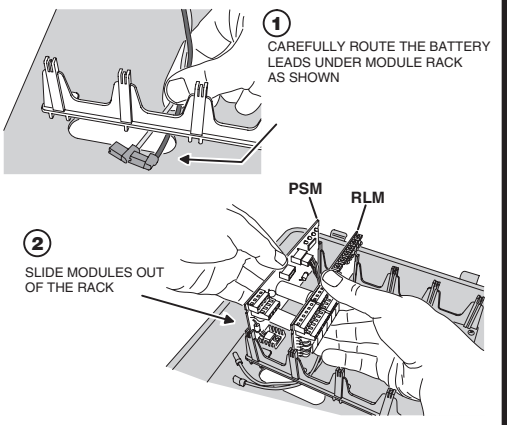

MOUNTING CABINET

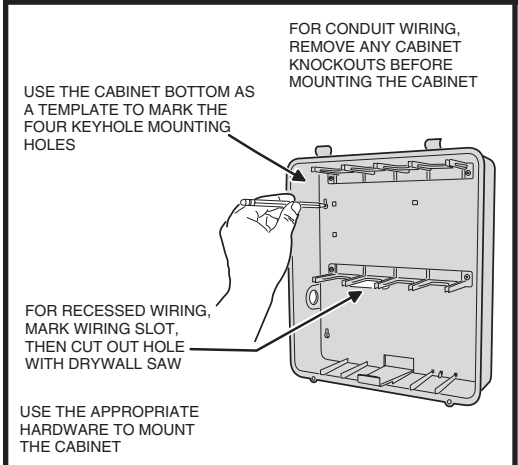

SETTING DEVICE ADDRESSES

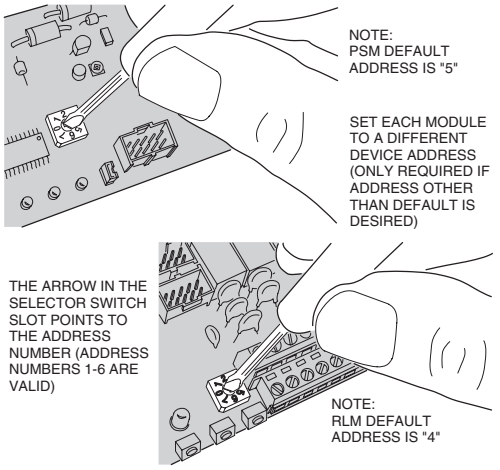

CONNECTING MODULES

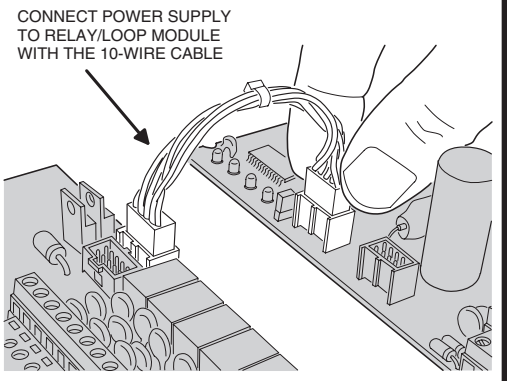

INSTALLING MODULES

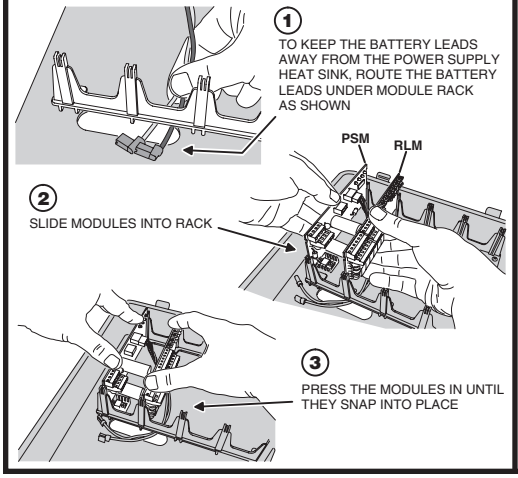

CONNECTING TAMPER SWITCH (OPTIONAL)

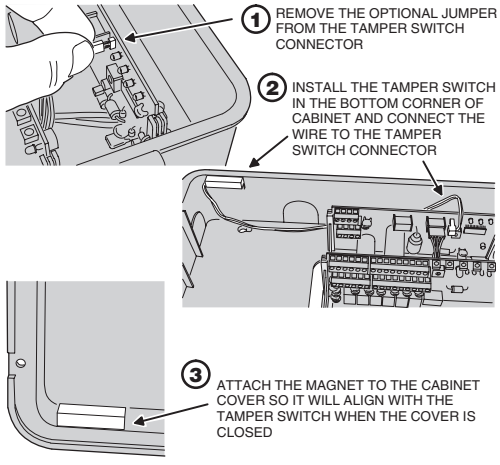

CONNECT TO ACCESS CONTROLLER

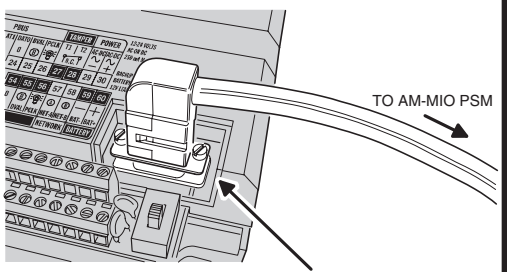

PLUG CABLE FROM AM-MIO PSM CONTROLLER CONNECTOR INTO THE CONTROLLER'S AM-MIO INTERFACE CONNECTOR (MODEL AM-3 CONTROLLER SHOWN)

OPTIONAL: USE THE PSM AUXILIARY PBUS TERMINALS TO CONNECT TO THE CONTROLLER'S AUXILIARY PBUS TERMINALS. REFERENCE THE PSM WIRING DIAGRAM. CABLE TYPE IS BELDEN 9931 (300 FEET MAX. CABLE RUN) OR WEICO 9405 (500 FEET MAX. CABLE RUN).

CONNECT RELAY OUTPUTS

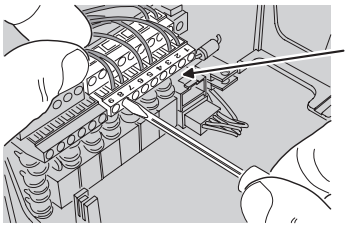

CONNECT RELAY OUTPUTS TO THE CONTROLLED DEVICES

RELAY RATING: 5 AMPS @ 14 VDC MAXIMUM

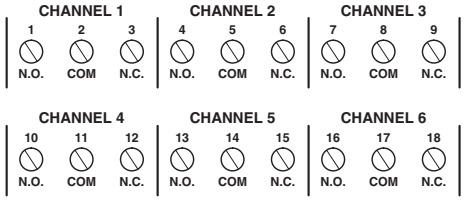

CONNECT LOOP INPUTS

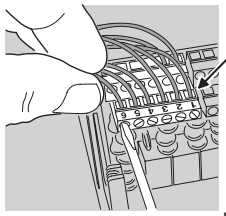

CONNECT ANY INPUTS TO THE LOOP INPUT TERMINALS

EACH LOOP INPUT CAN BE TRIGGERED WITH A NORMALLY OPEN OR NORMALLY CLOSED SWITCH

ALL LOOP INPUTS MUST BE TERMINATED WITH A 2.2K END-OF-LINE RESISTOR

EXAMPLE OF LOOPS 1-4 WITH NORMALLY CLOSED SWITCHES

EXAMPLE OF LOOPS 5-8 WITH NORMALLY OPEN SWITCHES

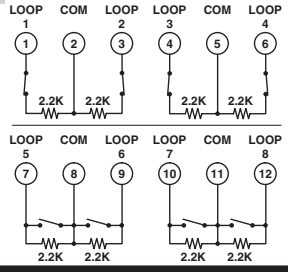

CONNECT AC POWER

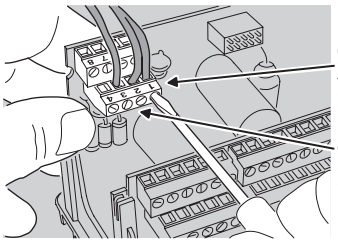

CONNECT 16 VAC POWER FROM PLUG-IN TRANSFORMER TO POWER TERMINALS 1 & 2

CONNECT A GOOD EARTH GROUND TO POWER TERMINAL 3

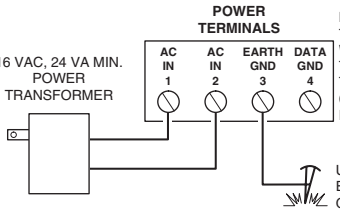

NOTE: DATA GROUND TERMINAL IS USED ONLY WHEN CONNECTING TO THE CONTROLLER AUXILIARY PBUS TERMINALS

CONNECT BACKUP BATTERY

PLACE THE BACKUP BATTERY IN THE CABINET

CONNECT THE RED LEAD TO BATTERY POSITIVE (+)
CONNECT THE BLACK LEAD TO BATTERY NEGATIVE (-)

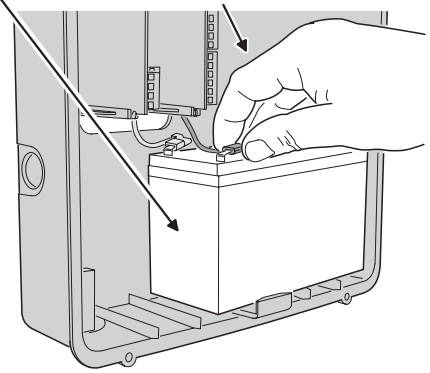

TEST RELAYS

⚠ CAUTION! DEVICES CONNECTED TO THE RELAYS WILL ACTIVATE ⚠

THE RELAY STATUS INDICATOR WILL LIGHT WHEN THE RELAY IS ENERGIZED

PRESS THE RELAY TRIGGER BUTTONS TO TEST EACH RELAY CONNECTED

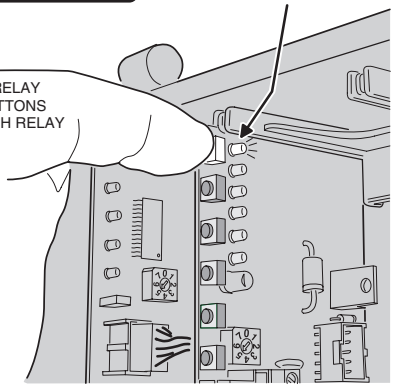

TEST LOOPS

WATCH THE LOOP STATUS INDICATOR WHILE TESTING THE LOOPS

GREEN = ALL LOOPS NORMAL
RED = ANY LOOP OPEN OR SHORTED

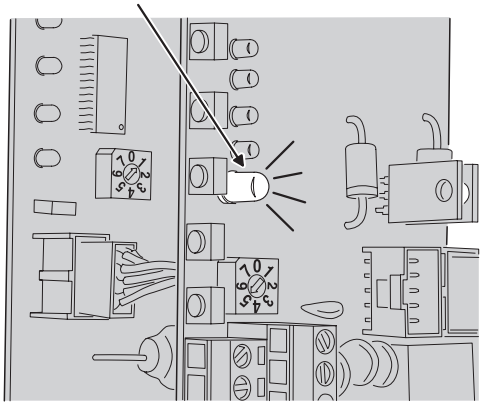

WIRING DIAGRAM

AM-MIO PSM WIRING DIAGRAM

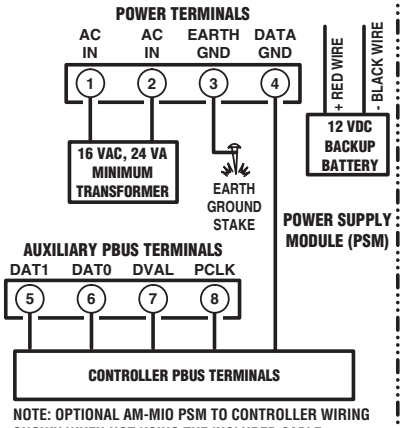

NOTE: OPTIONAL AM-MIO PSM TO CONTROLLER WIRING SHOWN WHEN NOT USING THE INCLUDED CABLE

AM-MIO RLM WIRING DIAGRAM

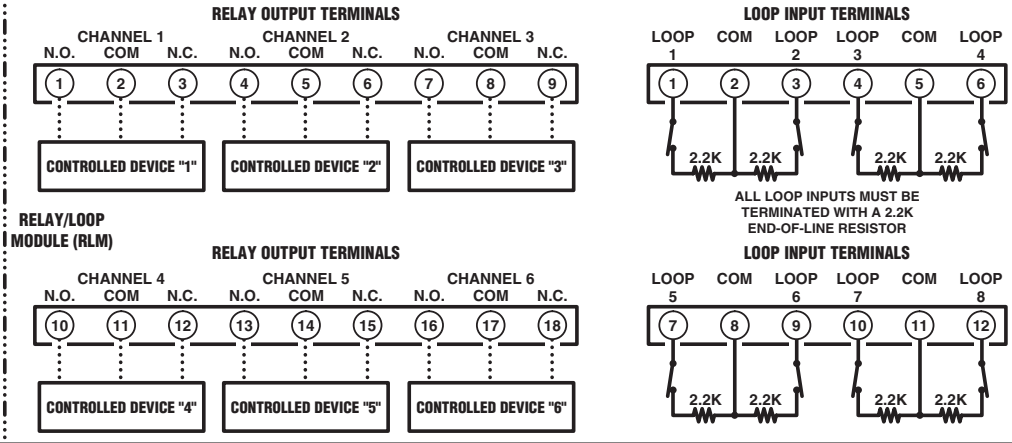

TEST SYSTEM

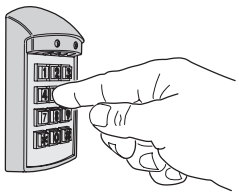

1. PROGRAM THE ACCESS CONTROL SYSTEM. BE SURE TO PROGRAM THE SYSTEM FOR THE DEVICE ADDRESS OF EACH OF THE AM-MIO MODULES.

2. USE ENTRY CODES OR TRANSMITTERS TO TEST ACTIVATE EACH OF THE AM-MIO OUTPUTS

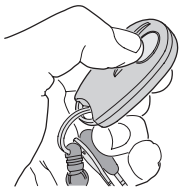

3. TEST TO SEE IF EACH OF THE AM-MIO LOOP INPUTS (IF USED) ARE RECOGNIZED BY THE ACCESS CONTROL SYSTEM

LINEAR LIMITED WARRANTY

This Linear product is warranted against defects in material and workmanship for twenty four (24) months. The Warranty Expiration Date is labeled on the product. **This warranty extends only to wholesale customers** who buy direct from Linear or through Linear's normal distribution channels. **Linear does not warrant this product to consumers.** Consumers should inquire from their selling dealer as to the nature of the dealer's warranty, if any. **There are no obligations or liabilities on the part of Linear LLC for consequential damages arising out of or in connection with use or performance of this product or other indirect damages with respect to loss of property, revenue, or profit, or cost of removal, installation, or reinstallation.** All implied warranties, including implied warranties for merchantability and implied warranties for fitness, are valid only until Warranty Expiration Date as labeled on the product. **This Linear LLC Warranty is in lieu of all other warranties express or implied.**

All products returned for warranty service require a Return Product Authorization Number (RPA#). Contact Linear Technical Service at 1-800-421-1587 for an RPA# and other important details.

IMPORTANT !!!

Linear radio controls provide a reliable communications link and fill an important need in portable wireless signalling. However, there are some limitations which must be observed.

- For U.S. installations only: The radios are required to comply with FCC Rules and Regulations as Part 15 devices. As such, they have limited transmitter power and therefore limited range.
- A receiver cannot respond to more than one transmitted signal at a time and may be blocked by radio signals that occur on or near their operating frequencies, regardless of code settings.
- Changes or modifications to the device may void FCC compliance.
- Infrequently used radio links should be tested regularly to protect against undetected interference or fault.
- A general knowledge of radio and its vagaries should be gained prior to acting as a wholesale distributor or dealer, and these facts should be communicated to the ultimate users.

Copyright © 2004 Linear LLC