Linear ACCESS

AM-3

Access Controller

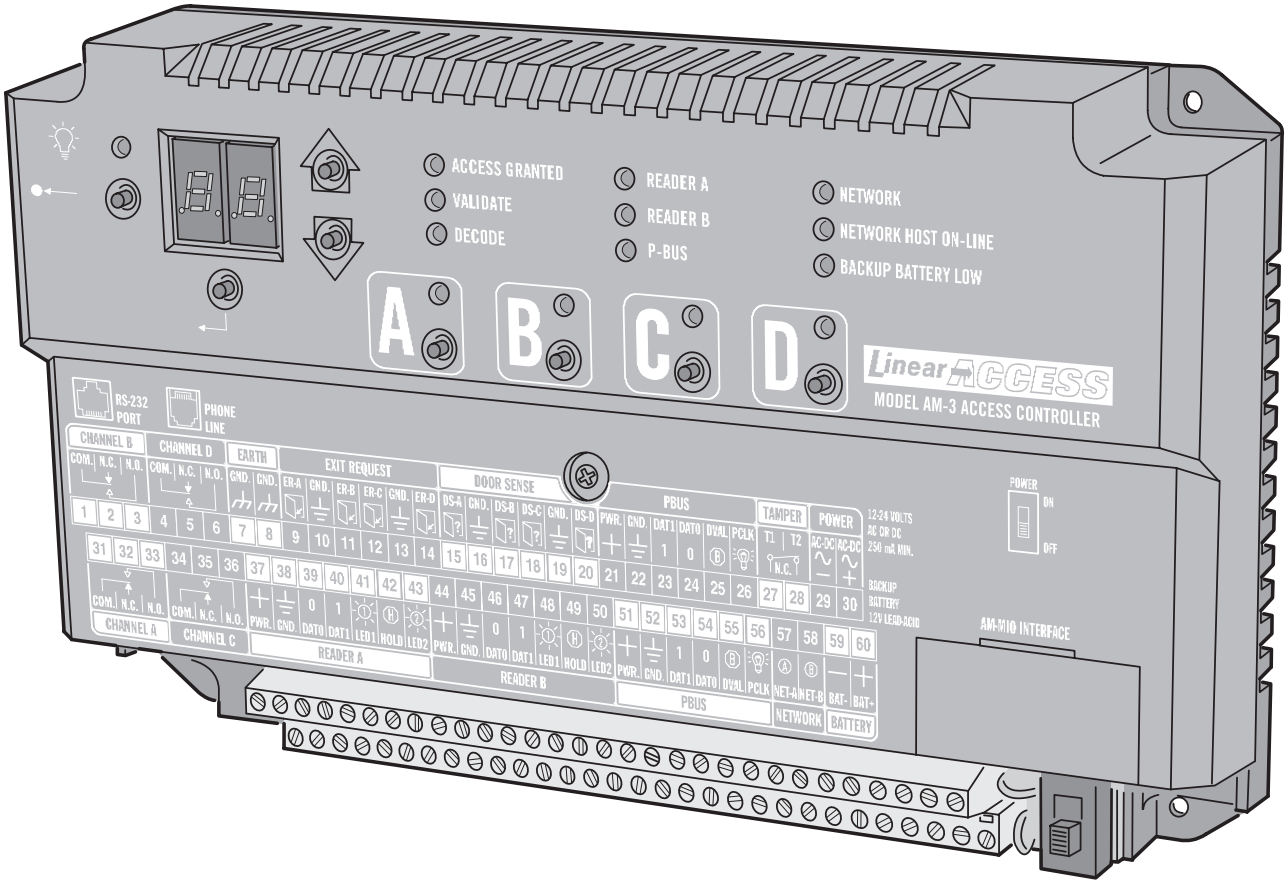

Installation Instructions

Linear®

(760) 438-7000 • FAX (760) 438-7043
USA & Canada (800) 421-1587 & (800) 392-0123
Toll Free FAX (800) 468-1340
www.linearcorp.com

Contents

Introduction 2
Operation 2
Hardware Features 3
Software Highlights 3
Feature Overview 3
Accessory Overview 4
PBUS Accessories 4
Wiegand Accessories 4
Component Locations 5
Wiring Diagram 6
Important Mounting Requirements 7
AM-3 Mounting 8
Relay Output Wiring 9
Power, Battery, & Ground Wiring 10
Telephone Wiring 11
PBUS Accessories 11
Wiegand Accessories 12
RS-232 Port 12
Optional Network Connection 13
Specifications 14
Troubleshooting 14
Linear Limited Warranty 15
FCC Notice 15

Introduction

The AM-3 Access Controller is designed for use as a primary access control device for gated communities, parking garages, office buildings, apartments, dormitories, hotels/motels, commercial buildings and recreational facilities.

Housed in a lockable, plastic enclosure, the AM-3 features a 2-digit LED display, nine status indicators, four relay indicators with four relay activation pushbuttons. Three programming buttons, a reset button, and a power indicator are present. The enclosure is monitored with a magnetic “tamper” switch.

The system controls its four output relays by responding to various input devices that react to proximity cards, transmitters, and entry codes. The four relay output channels can be programmed to control electric door strikes, magnetic locks, door & gate operators, or barrier gates.

Access is granted or denied depending on the current user’s authorization to gain access and system settings that control groups of users or all users. Complete access control event logging, access time restriction, access location restriction, and administration functions are also available to manage the installation.

The AM-3 is network ready. AM-3 units can be interconnected with Linear’s AE-1000 and AE-2000 Telephone Entry Systems through a 3-wire RS-485 network.

Two sets of Wiegand inputs are available for connection to 26, 30, or 31-bit Wiegand devices (card readers, etc.). Two sets of PBUS inputs are available for connection to Linear’s line of remote accessories.

The AM-3 can be powered from a 12-24 Volt AC or DC source. DC power can be obtained from the access device or AC power from a separate power transformer. The system supports and charges a 12-volt backup battery for operation during power outage. Low battery detection circuitry monitors the backup battery’s condition. The EEPROM memory retains all entry codes and programming, even without power.

Operation

In a typical installation, the unit’s memory would be programmed with each resident’s name and entry code number. Ariving visitors would use a remote keypad to enter their entry code. Also proximity receivers, swipe card readers, and other remote devices can be used with the system.

Block coded MegaCode® transmitters can be used to gain access through a remote radio receiver connected to the AM-3 PBUS. Each transmitter can be individually suspended or re-activated.

The system’s clock/calendar can control access based on specific times and dates. Automatic relay activation can be scheduled. Access can be restricted to certain times and dates. Holiday access can be scheduled.

The system’s event log records system activity for future reference.

Hardware Features

- ✓ **FOUR FORM "C" (N.O. & N.C) RELAYS**
  Each relay has 3-amp @ 24-volt rating with a status indicator and relay latching pushbutton
- ✓ **FOUR REQUEST-TO-EXIT INPUTS**
  Activates access device for exiting using a hardwired switch
- ✓ **FOUR SENSING INPUTS**
  For sensing door position to control door-ajar and alarm features, or for access inhibit timer
- ✓ **NINE STATUS INDICATORS**
  Display access, reader, and system information
- ✓ **OPTIONAL MODEM**
  Compatible with the Model ACM-1 plug-in modem for telephone communications with system
- ✓ **RS-232 COMMUNICATIONS PORT**
  RS-232 port for direct connection to printer or computer
- ✓ **NETWORK SUPPORT**
  Multiple units can be connected together to share data
- ✓ **EXPANSION INTERFACE SUPPORT**
  Model AM-MIO accessory adds aditional input and outputs to the AM-3
- ✓ **ON-BOARD CLOCK/CALENDAR CIRCUIT**
  Stamps the event log data as it is stored in the system's memory
- ✓ **WIEGAND INPUTS**
  Two Wiegand format card reader inputs for connection to external devices
- ✓ **LINEAR PBUS SUPPORT**
  Two PBUS input/output ports for connection to Linear accessories
- ✓ **BACKUP BATTERY SUPPORT**
  Built-in backup battery charging circuit
- ✓ **POWER FAILURE MONITOR**
  AC power input is monitored, power outages are recorded in the event log

Software Highlights

- ✓ **COMPUTER PROGRAMMABLE**
  No dedicated programmer required, program with a computer and a modem
- ✓ **LARGE ENTRY CODE CAPACITY**
  Up to 20,000 entry codes 2-8 digits in length can be used for gaining access
- ✓ **LARGE TRANSMITTER CAPACITY**
  Up to 45,600 block coded and 20,000 individually enrolled Linear transmitters can be used for gaining access
- ✓ **TRANSMITTER FACILITY CODE SUPPORT**
  Identifies wireless transmitters by installation
- ✓ **LARGE CARD CAPACITY**
  Up to 45,600 block coded and 20,000 individually enrolled cards can be used for gaining access
- ✓ **FOUR INDEPENDENT RELAY CHANNELS**
  Each output's action is programmable
- ✓ **PROGRAMMABLE TIME SCHEDULED RELAY ACTIVATION**
  Activation for up to four time periods for each of the 32 system time zones
- ✓ **PROGRAMMABLE TIME ZONE ACCESS VALIDATION**
  Validation during four time periods for each of the 32 system time zones
- ✓ **PROGRAMMABLE VALIDATION DAYS**
  Select days of the week access is allowed
- ✓ **PROGRAMMABLE HOLIDAY DAYS**
  Select up to 24 expiring & 24 non-expiring holidays for access restriction
- ✓ **OBSTACLE TRANSMITTER SUPPORT**
  Compatible with Linear's Model MGT transmitter
- ✓ **EVENT LOG**
  Stores each system event in memory for record keeping
- ✓ **DELETED CARDHOLDER DATABASE**
  System logs deleted cardholders for future identification
- ✓ **TIMED ANTI-PASSBACK**
  Disables entry code for a programmed time after use

Feature Overview

Relay Outputs

Four 3-amp dry contact relay outputs are provided to activate four access devices, such as door strikes, magnetic locks, automatic doors, barrier gates, and automatic sliding gates. The relay outputs can also be used for alarm contact shunting, operator obstacle triggering, and alarm activation. Each of the four relays can also be manually activated from buttons on the front of the AM-3. LED indicators display the status of each relay.

Request-to-Exit Inputs

Each relay channel has a request-to-exit input. These inputs are supplied for hardwire activation of the access devices. Typically a request-to-exit input is wired to a pushbutton inside of the access controlled area. When a person desires to exit, pressing the pushbutton will activate the output relay channel and trigger the access device. A loop detector for automatic gate operation can be connected to a request-to-exit input.

Sensing Inputs

The sensing inputs connect to door switches that monitor whether the controlled door is open or closed. The sensing inputs may alternately be programmed as "access inhibit" inputs for use with an external timer or service switch.

Optional Modem

A modular connector is provided for telephone line connection to the unit's optional 33.6K baud modem. The system can be accessed remotely for programming and control over the standard telephone system using a personal computer with a modem. For system backup, a computer connected through the modem can store and retrieve the AM-3's memory data.

RS-232 Communications Port

A modular connector is provided for the bi-directional 38.4K baud RS-232 port. The AM-3's RS-232 port connects to a personal computer's COM port. System programming can be performed locally with a computer connected to the RS-232 port.

Obstacle Detection

Linear's Model MGT safety edge transmitter is compatible with the AM-3. The MGT detects and transmits obstacle events to the AM-3.

Programming Memory

The AM-3's flash memory retains all entry codes, transmitter information, card access, and programming, even without power.

Computer Programming

The system programming can be accessed using a computer and modem using Linear's AccessBase2000 custom software.

Battery Backup

The system supports a 12-volt battery backup for operation during power outage. The system will charge the backup battery when AC power is present.

Network Support

Multiple AM-3, AE-1000, & AE-2000 units can be networked together allowing information sharing between the units. Networked units are interconnected with a three-wire cable. A common event log is retained for all of the networked units.

Linear PBUS Ports

Two 6-wire Linear PBUS input/output ports are available to connect to several accessories (keypads, proximity readers, remote receivers).

Accessory Overview

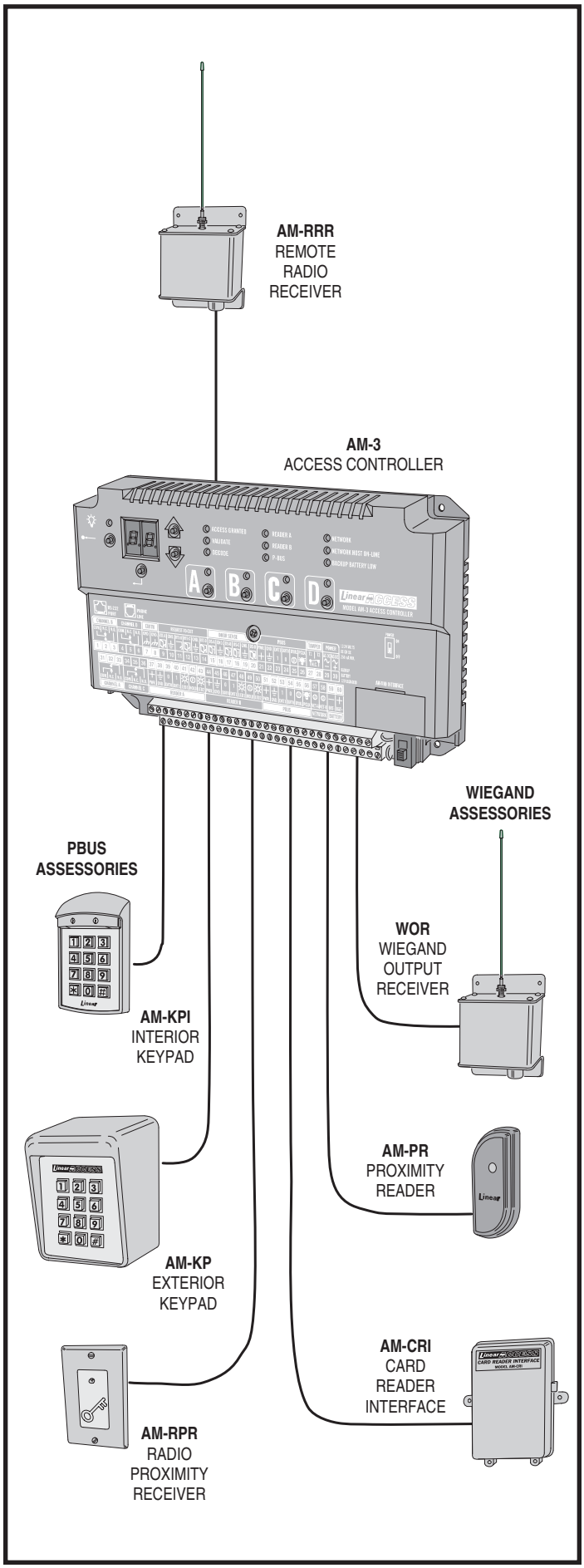

PBUS Accessories

Several compatible accessories are available to connect to the AM-3's two 6-wire communications "PBUS" inputs. Up to six PBUS accessories can be used with each AM-3 unit.

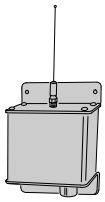

AM-RRR

AM-RRR Remote Radio Receiver
For wireless transmitters, connect the Model AM-RRR high-gain superheterodyne UHF receiver. The receiver is housed in a weather-resistant enclosure and can be mounted indoors or outdoors. Gaskets and a weather-tight wiring strain relief seal the unit from the elements.

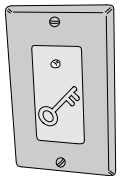

AM-RPR

AM-RPR Remote Proximity Receiver
The Model AM-RPR functions as a remote device that supplies localized radio reception for the AM-3 In a typical installation, the AM-RPR would be mounted in a plastic single-gang electrical box next to the controlled opening. When the user requires access, their transmitter must be activated within three inches of the AM-RPR faceplate.

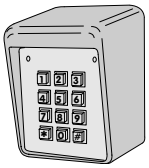

AM-KP

AM-KP Exterior Keypad
The Model AM-KP is housed in a rugged cast aluminum enclosure designed for exterior installations. The die-cast keys have bright, easy-to-read yellow graphics. The keypad can be mounted to a pedestal or directly to a wall. A keylock secures the keypad to the mounting backplate.

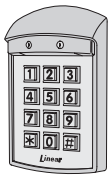

AM-KPI

AM-KPI Interior Keypad
The Model AM-KPI keypad is housed in a rugged, plastic enclosure designed to be mounted indoors in a standard single-gang electrical box. Tamper resistant screws secure the keypad to its mounting plate. The die-cast keys have bright, easy-to-read yellow graphics and is illuminated with white LEDs.The keypad is supplied with a satin-chrome bezel and three interchangeable colored bezels (white, ivory, & bronze) to customize the keypad appearance for the installation.

AM-CRI

AM-CRI Card Reader Interface
The Model AM-CRI expands the standard two AM-3 Wiegand inputs by supporting one or two additional 26-bit Wiegand input devices per AM-CRI interfaces used. Each AM-CRI connects to the AM-3's PBUS inputs.

Wiegand Accessories

Two Linear accessories are available to connect WIEGAND format devices to the AM-3. Most other manufacturer's 26, 30 & 31-bit WIEGAND output devices can also be used with the AM-3.

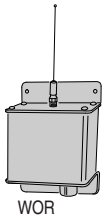

WOR

WOR Wiegand Output Radio Receiver
For block-coded Linear wireless transmitters, connect the Model WOR high-gain superheterodyne UHF receiver. The receiver is housed in a weather-resistant enclosure and can be mounted indoors or outdoors. Gaskets and a weather-tight wiring strain relief seal the unit from the elements.

AM-PR

AM-PR Proximity Reader
The Model AM-PR is a radio-based reader that works with either proximity tags (Model AM-PT) or proximity cards (Model AM-PC), both of which are slotted to attach to key rings. Upon reading a user's tag or card, it transmits the entry data via a Wiegand output to the AM-3. An integral LED confirms to the user that access is granted.

Component Locations

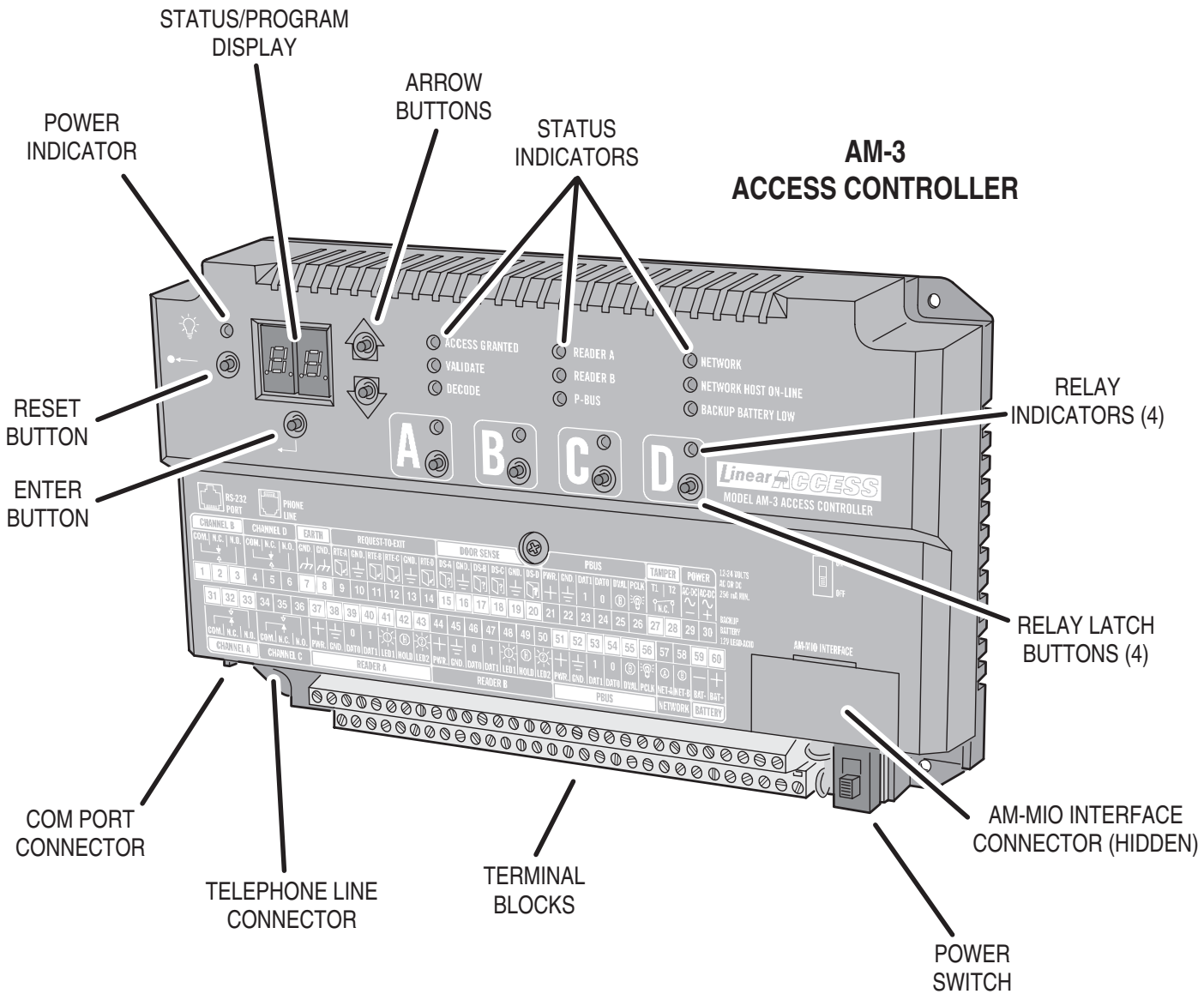

Wiring Diagram

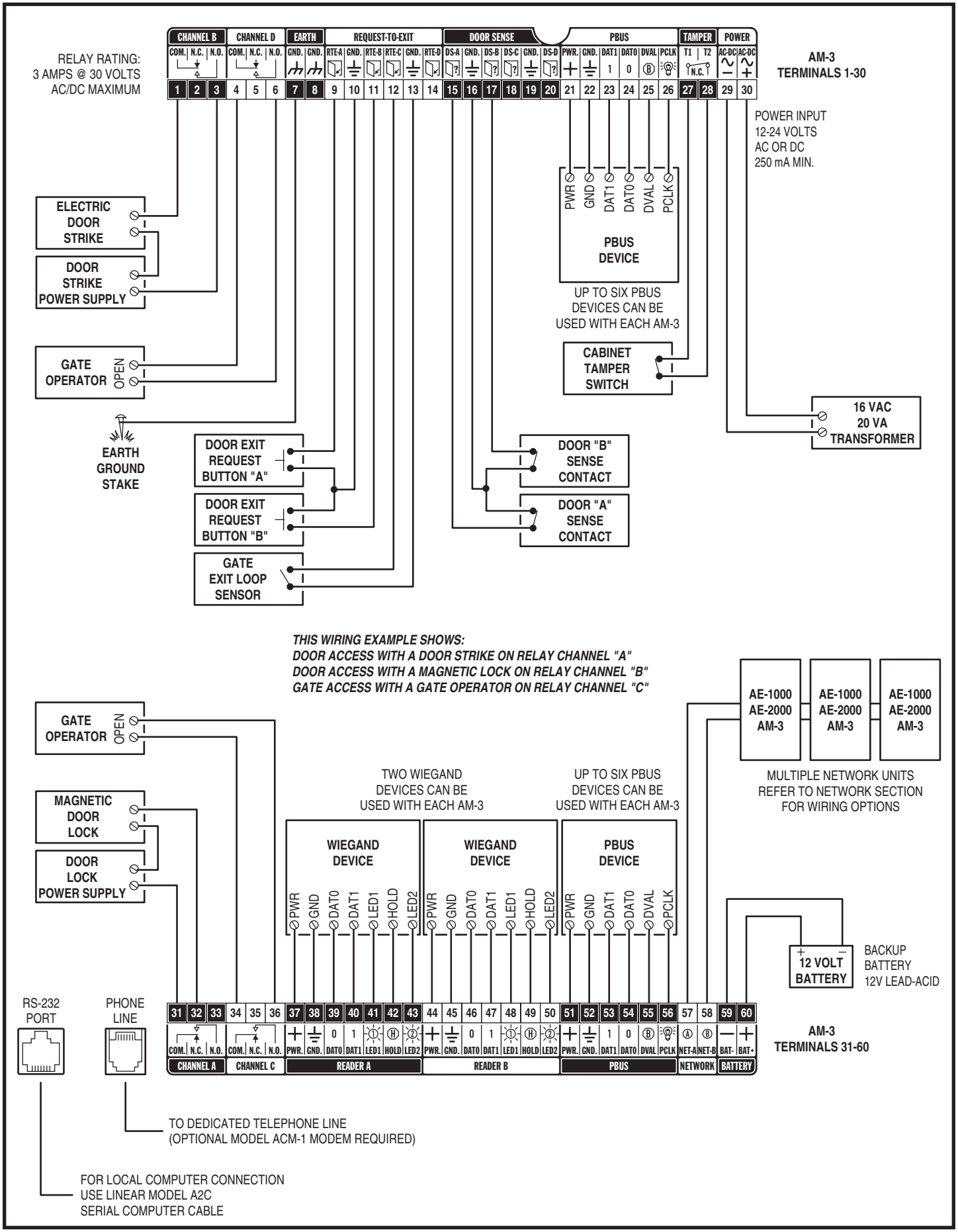

Important Mounting Requirements

The AM-3 Access Control System can be installed for public or private use. The mounting requirements for remote keypads will vary depending on the installation. Review the following information before starting the installation.

Mounting Environment

Consider the environmental factors at the desired mounting location. Although the exterior keypads are designed for direct outdoor installations, it is necessary to protect the AM-3 from extreme exposure to sun, driving rain, or snow. Mounting the unit in a kiosk can provide extra environmental protection. Use a Model CAB-3 (P/N ACP00913) cabinet for mounting the AM-3 outdoors.

Follow Building Codes

Check all local building codes and ordinances prior to installing the system. Proper installation of the AM-3 conforming to the local building codes for access control equipment is a regulatory requirement. The AM-3 and remote keypad installation is an extremely important and integral part of the overall access control system.

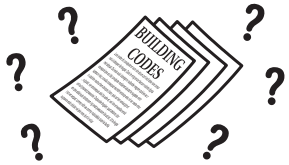

Mounting Location

If the AM-3 is used to control a door or pedestrian gate, locate the remote keypad as near as practical to the entry point. If the unit is mounted on or in a wall adjacent to the entry point, be sure the wall is sturdy. The repeated shock and vibration from a slamming access door or spring-loaded pedestrian gate must be isolated from the keypad. **NEVER MOUNT THE KEYPAD DIRECTLY TO A MOVING DOOR OR GATE!**

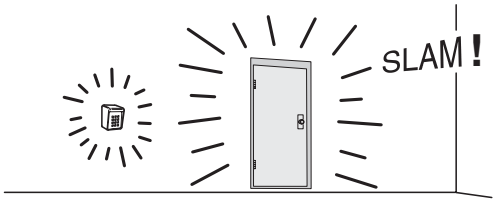

Gate Installations

If the AM-3 is used to control a gate operator connected to a vehicular gate, the remote keypad MUST be mounted AT LEAST 10 feet away from the gate (open and closed) and gate operator. **AT NO TIME SHOULD A PERSON BE ABLE TO TOUCH THE GATE OR GATE OPERATOR AND THE KEYPAD AT THE SAME TIME.**

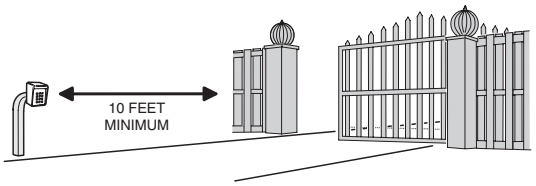

Vehicle Traffic

Do not mount the remote keypad where it extends into any traffic lane. Locate the gooseneck pedestal or entry kiosk so all parts of the keypad are outside the traffic lane. Locate the keypad clear of any turn-around lanes vehicles use when access is denied.

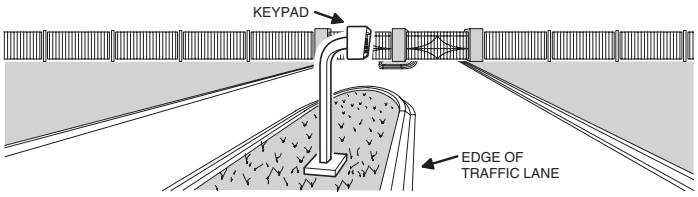

Americans with Disability Act (A.D.A.) Requirements

THE FOLLOWING WHEELCHAIR ACCESS REQUIREMENTS ARE FOR PUBLIC DOOR CONTROL INSTALLATIONS ONLY.

1. If the clear floor space allows only forward approach to the keypad, the maximum high forward reach allowed is 48” above grade to the top of the keypad.
2. If the high forward reach to the keypad is over an obstruction of greater than 20” but less than 25”, the maximum high forward reach allowed is 44” above grade to the top of the keypad.
3. If the clear floor space allows parallel approach by a person in a wheelchair, the maximum high side reach shall be 54” above grade to the top of the keypad.
4. If the high side reach is over an obstruction of 24” or less, the maximum high side reach allowed is 46” above grade to the top of the keypad.

AM-3 Mounting

Standard Cabinet

The AM-3 cabinet is designed to be mounted directly to a wall or flat surface.

Wiring access for power, telephone, earth ground, control output must be available at the mounting location. For easier wiring, choose a well lit location. Wiring access for remote accessory cables must also be available at the mounting location.

1. Flip the cabinet's cover up to unlock the hinges and remove the cover from the case.
2. To make cabinet mounting easier, the AM-3 can be removed from the cabinet (optional).
3. If using conduit for wiring, punch out the selected cabinet wiring knockouts.
4. Use the cabinet as a template and mark the locations for the four cabinet mounting screws in the keyhole slots.
5. Mark the wiring access slot if the wiring is being routed from behind the cabinet.
6. Use a hole saw to cut out the location for the wiring access slot (if used).
7. Use four screws and appropriate screw anchors to mount the cabinet to the wall.
8. If the AM-3 was removed to mount the cabinet, replace the AM-3.
9. After the installation's wiring and programming are complete, replace the cabinet's cover and secure it with the two screws provided.

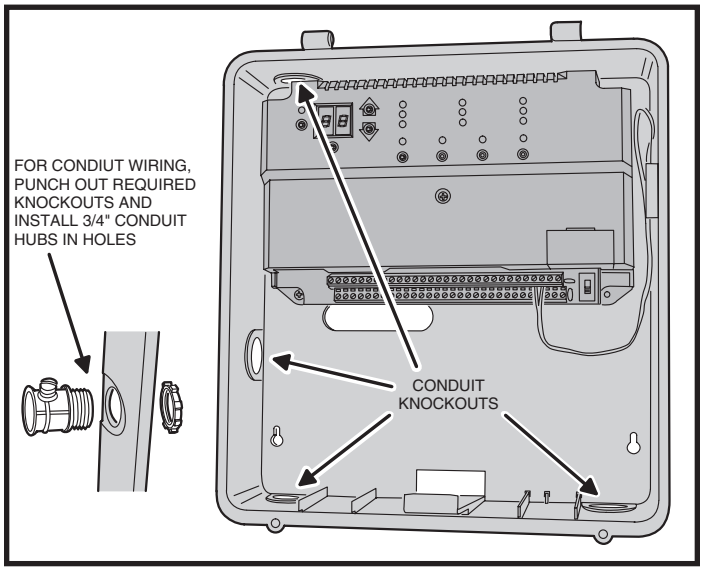

Outdoor Cabinet

To protect the unit outdoors, the AM-3 can be mounted inside a Linear Model CAB-3 (P/N ACP000913) outdoor metal cabinet.

Wiring access for power, telephone, earth ground, control output must be available at the mounting location. For easier wiring, choose a well lit location. Wiring access for remote accessory cables must also be available at the mounting location.

1. Open the cabinet's cover and push it in to latch it open.
2. Punch out the selected cabinet wiring knockouts.
3. Use the cabinet as a template and mark the locations for the four cabinet mounting screws.
4. Use four screws and appropriate screw anchors to mount the cabinet to the wall.
5. Mount the AM-3 inside the cabinet with four 6-32 screws.
6. After the installation's wiring and programming are complete, lower the cabinet's cover and secure it with a lock.

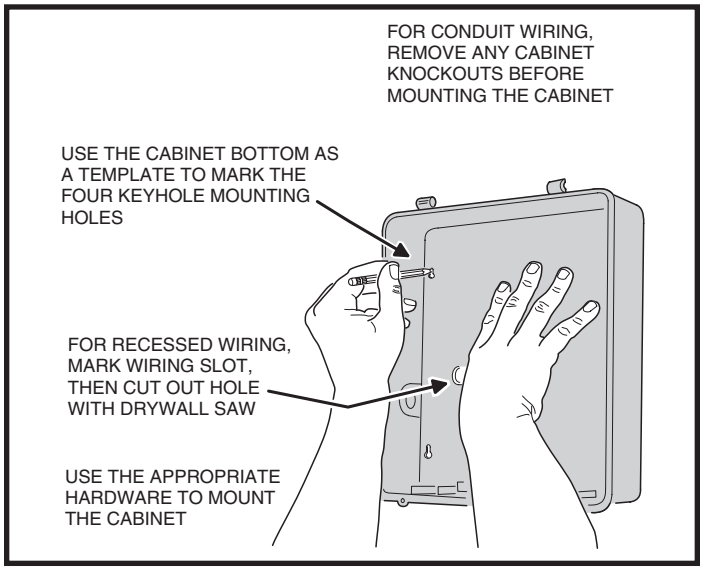

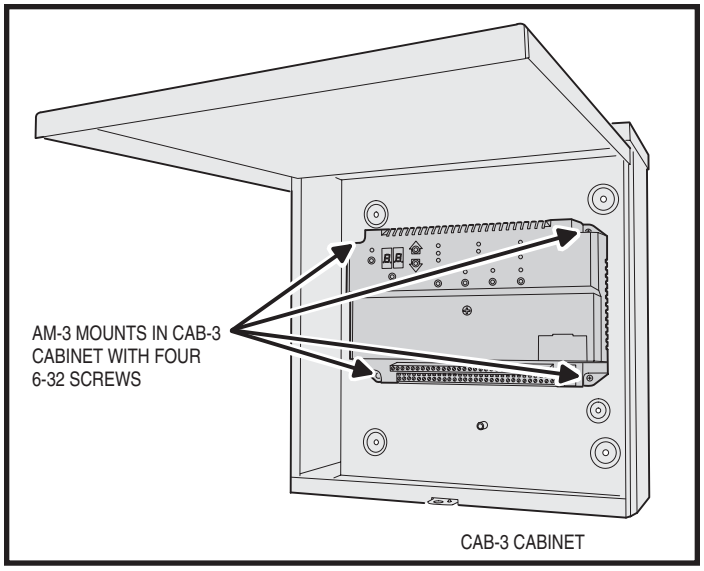

Relay Output Wiring

Any of the four relay outputs channels (A-D) can be used to control access devices on doors or gates.

Door or Pedestrian Gate Control

1. Install a low voltage electric door strike or magnetic lock as a locking device for the door or pedestrian gate.
2. Install the power supply or transformer for the locking device. **DO NOT POWER THE AM-3 FROM THIS POWER SUPPLY.**
3. Connect one wire from the power supply to one wire from the locking device.
4. Route two wires between the locking device and the AM-3. Connect one wire to the remaining wire of the locking device. Connect the other wire to the remaining wire of the power supply.

5A. For a door strike, connect the wires to the AM-3 relay **COM** & **N.O.** terminals.

5B. For a magnetic lock, connect the wires to the AM-3 relay **COM** & **N.C.** terminals.

Gate Control

1. Route two wires between the gate and the AM-3.
2. Connect the gate operator's **OPEN** terminals to the AM-3 relay **COM** & **N.O.** terminals.

✦ ***NOTE:*** *For operator wiring specifics, refer to the gate operator's wiring diagram.*

Request-to-Exit Inputs

Each of the four relay outputs has a request-to-exit input terminal. Grounding this terminal will activate the associated relay. Exit request inputs are typically used with push bars, loop sensors, or pushbuttons.

1. Install the pushbutton or device to signal an exit request.
2. Route two wires from the device to the AM-3.
3. Connect the device's normally open output to the wires.
4. To activate a relay channel, connect the wires to the associated relay request-to-exit terminal (**RTE-A, RTE-B, RTE-C,** or **RTE-D**) and a **GND** terminal.

Sensing Inputs

The sensing inputs can connect to a door switch that monitors whether the controlled door is open or closed.

1. To use the door sense feature to detect forced entry or door ajar conditions, install a normally closed door switch on the door or pedestrian gate and route two wires from the switch to the AM-3.
2. Connect the sensing device wires to the associated relay sensing terminal (**DS-A, DS-B, DS-C,** or **DS-D**) and a **GND** terminal.

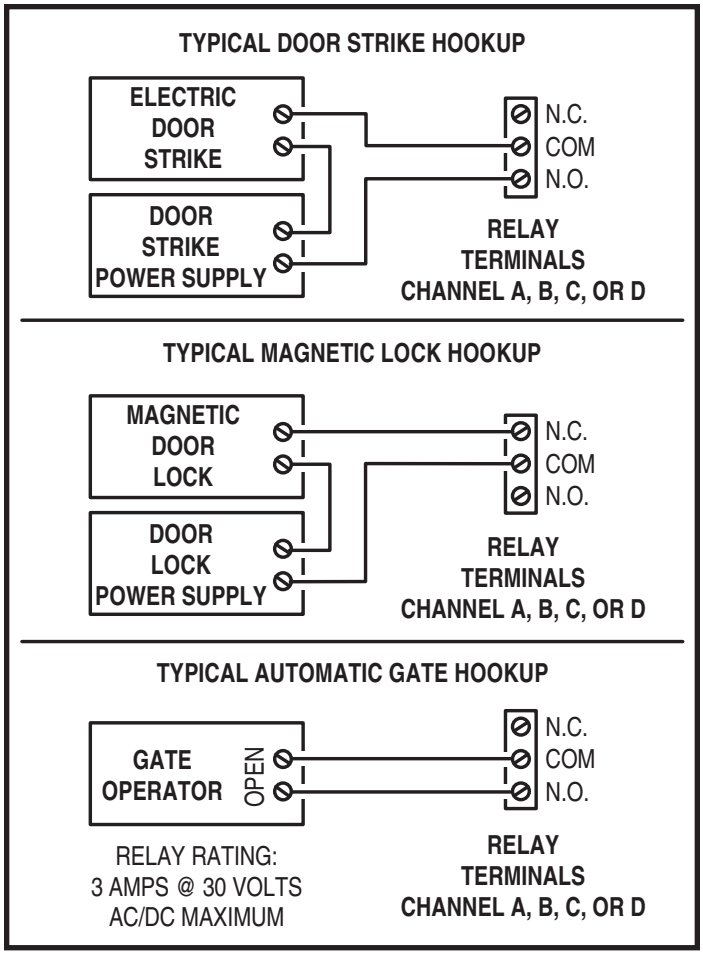

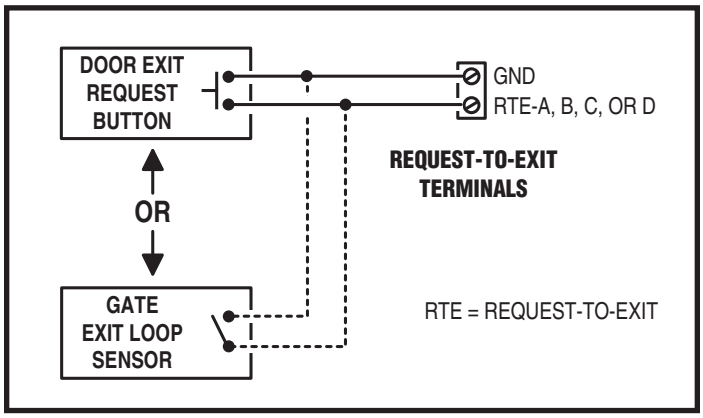

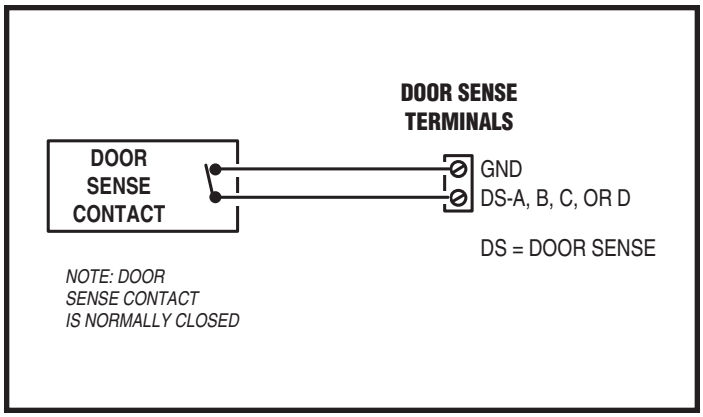

Power, Battery, & Ground Wiring

Power Wiring

✦ ***NOTE: DO NOT APPLY POWER UNTIL THE INSTALLATION IS COMPLETE. TURN MASTER POWER SWITCH OFF BEFORE WIRING.***

1. Route two wires between the AM-3 and the power transformer.
   - For power wire runs up to 100 feet, use 18 AWG, 600-volt insulated wire.
   - For power wire runs up to 200 feet, use 16 AWG, 600-volt insulated wire.
2. Connect the wires to the transformer. Connect the other end of the wires to the AM-3 **AC1** & **AC2** terminals.

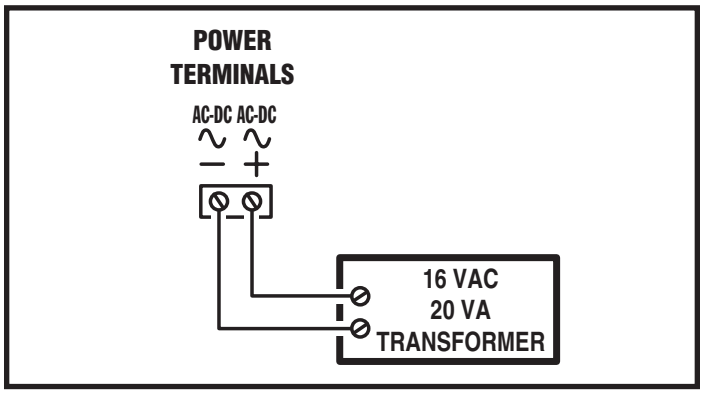

Backup Battery

Use of battery backup is optional. It will allow the AM-3 to operate for short periods of time without AC power. The door or gate access device must use some type of battery backup of its own for the entire system to be functional.

Use a 12-volt gel-cell type battery. Up to a 7-amp/hr battery will fit into the AM-3 cabinet. Do not use a 6-volt battery.

✦ ***NOTE:*** *A backup battery is not required to maintain the AM-3 clock/calendar and programming memory during power outages.*

1. Route two battery leads between the AM-3 and the backup battery.
2. Connect the Battery positive to the AM-3 **BAT+** terminal and the negative to the **BAT-** terminal.

✦ ***NOTE:*** *The AM-3 supplies battery charging current. An external battery charger is not required to maintain the battery.*

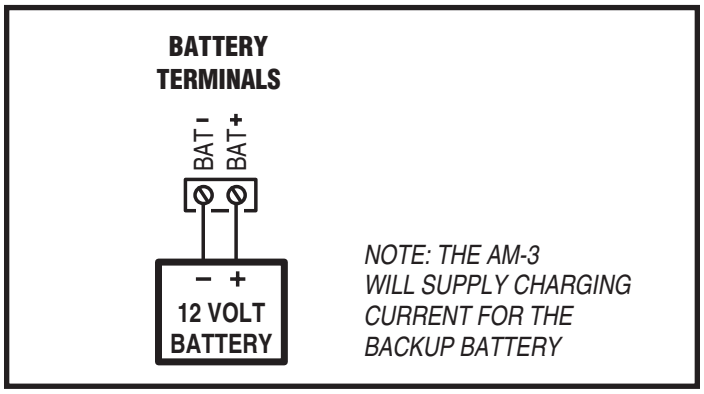

Earth Ground

For the best ground, use size 12 gauge solid wire or larger to connect the to an 8-foot copper ground rod. Locate the ground rod next to the Power and Telephone company rods and bond the rods together with a new clamp. Do not disturb the clamps installed by the Power or Telephone Company. Alternately, connect to a metalic cold water pipe for the earth ground.

1. Connect the wire from the earth ground to the AM-3's **EARTH GROUND** terminal.

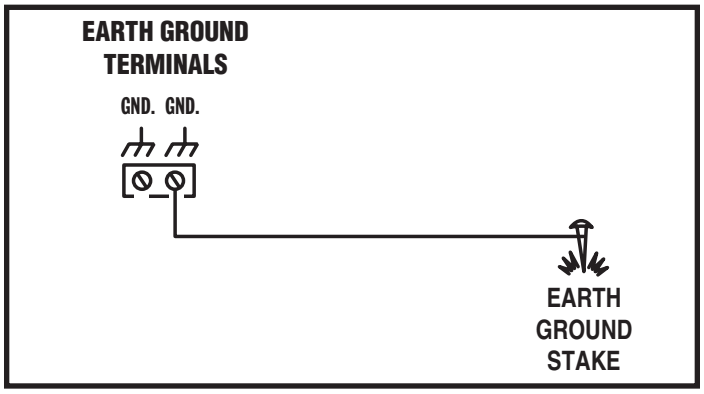

Telephone Wiring

For programming, the AM-3 connects to a standard telephone line.

✦ ***NOTE:*** *The optional Model ACM-1 modem is required for telephone communications to the AM-3 controller.*

Important Telephone Wiring Tips

- **DO NOT ROUTE TELEPHONE AND AC WIRING INSIDE THE SAME CONDUIT.** Route all telephone wires inside a dedicated conduit that is at least six inches away from any AC line wiring.
- All telephone wiring must be made on the "building" side of the telephone company's demarcation device (the terminal block where the telephone line connects to the building).
- If any security system or personal alert system at the installation is connected to the telephone line, be sure that it is connected to the line ahead of the AM-3 using a RJ-31X interface.
- Use only high-quality telephone wire. All telephone wire should be twisted-pair with a minimum size of 24 AWG.

Typical Telephone Wiring

1. Connect a double-ended modular cable between the AM-3's **PHONE LINE** jack and the modular telephone jack wired to the installation's telephone line.

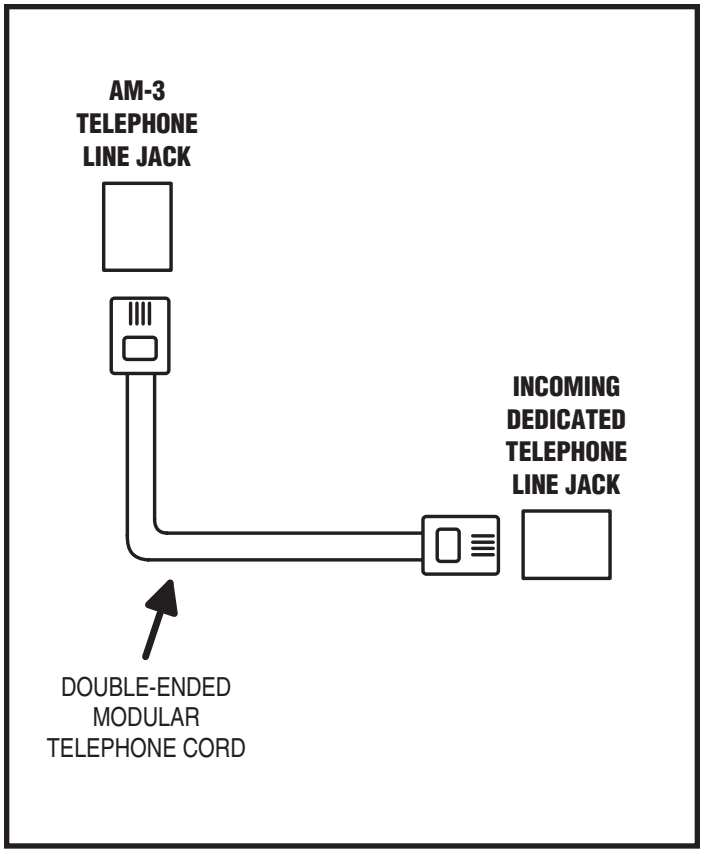

PBUS Accessories

Several accessories (keypads, proximity readers, remote receivers) can be connected to the AM-3's two PBUS input/output ports. A typical application for a remote keypad would be to control a second door or gate.

Linear's PBUS devices compatible with the AM-3 are:

- AM-RRR Remote Radio Receiver
- AM-RGR Remote Radio Receiver
- AM-RPR Radio Proximity Receiver
- AM-KP Exterior Keypad
- AM-KPI Interior Keypad
- AM-CRI Card Reader Interface

1. Mount and install the accessory as described in its installation instructions.
2. Route 6-conductor cable from the AM-3 to the accessory.
   - For wire runs up to 300 feet use 24 AWG Belden Type 9931 or equivalent.
   - For wire runs up to 500 feet use 20 AWG Weico Type 9405 or equivalent.
3. Set the **DEVICE ADDRESS** rotary switch in the accessory to a unique address number. When programming the system, the device address number will identify each PBUS accessory to the AM-3.
4. Connect the 6-conductor cable to the accessory and the AM-3.

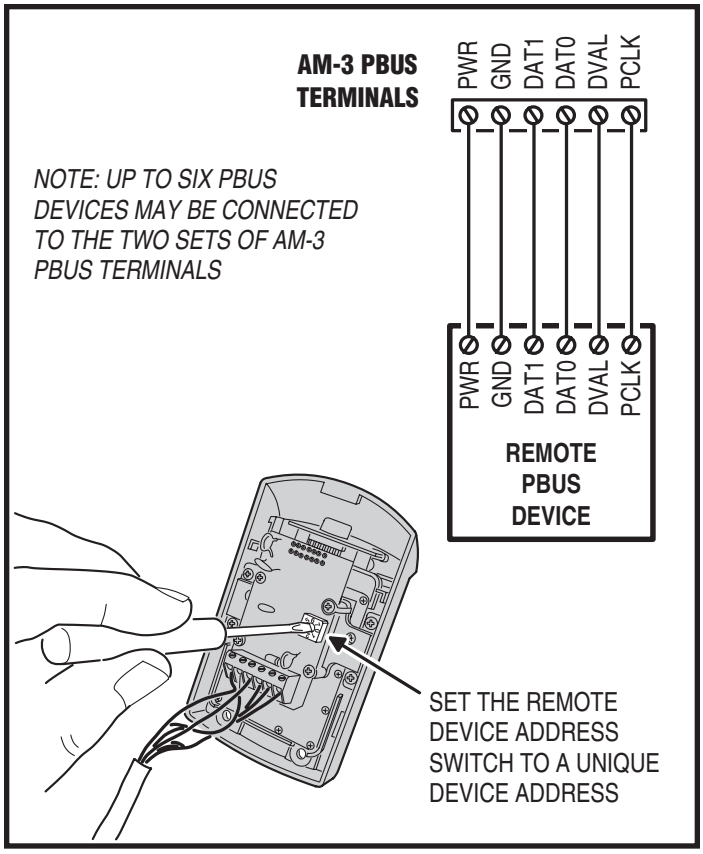

Wiegand Accessories

The two AM-3 Wiegand inputs (READER A & B) can connect to a large variety of 26, 30, and 31-bit Wiegand output accessories. The Wiegand format is a common standard for access control equipment. A typical application would be to add swipe card or proximity readers to the system.

✦ ***NOTE:*** *Depending on the Wiegand accessory used, the LED1, LED2, and HOLD connections may not be required.*

- LED1 output is switched to ground during non-access time.
- LED2 output is switched to ground for one second during access time.

1. Mount and install the Wiegand accessory as described in its installation instructions.
2. Route a cable from the AM-3 to the accessory.
   - For wire runs up to 300 feet use 24 AWG Belden 9931 or equivalent.
   - For wire runs up to 500 feet use 20 AWG Weico 9405 or equivalent.
3. Connect the cable to the accessory and the AM-3 as shown in the figure.

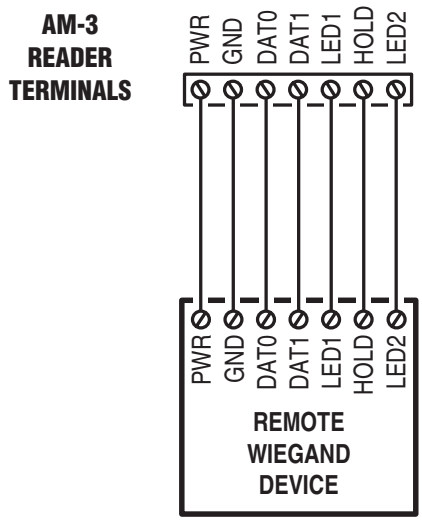

NOTE: THE LED1, LED2, AND HOLD CONNECTIONS MAY NOT BE REQUIRED DEPENDING ON THE WIEGAND DEVICE USED

RS-232 Port

A modular connector is provided for the bi-directional 38.4K baud RS-232 port. The AM-3's RS-232 port connects to a personal computer's COM port. System programming can be performed locally with a computer connected to the RS-232 port.

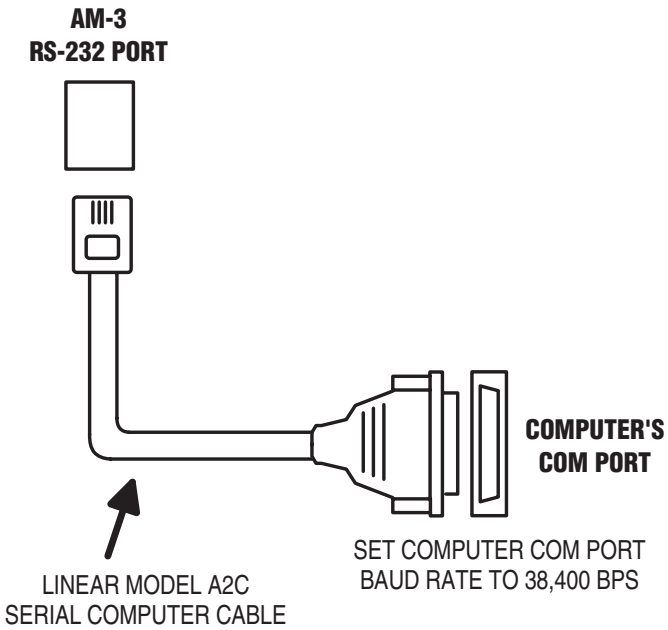

NOTE: USE A DB-25 TO DB-9 CABLE ADAPTER IF REQUIRED

Optional Network Connection

Linear's AM-3, AE-1000, & AE-2000 Access Control Systems can be connected together in a network. A network will allow sharing programming and user information between the systems. Program each unit to a different network Node Address.

Network wiring conforms to 3-wire RS-485 electrical specifications. Units connected in the network can be wired using one unit as a "hub" or by wiring from one unit to the next in "daisy-chain" fashion. See the figures for wiring options.

- Use Belden 9925 or Carol C0600 shielded cable or equivalent. Maximum wire run distance is 4000 feet.

✦ ***NOTE:*** *Be sure to connect the cable's shield to one of the* **GND** *terminals.*

Home-run Network

1. Mount and install the units for the network.
2. Choose one unit to be the Network Master. Usually this would be a centrally located or "main" unit.
3. Route 3-conductor shielded cable from the Master unit to one of the other units. Repeat this step to connect the Master unit to each of the other units.
4. Connect the 3-conductor cable to each unit's **NETWORK** terminals.

Daisy-chain Network

1. Mount and install the units for the network.
2. Route 3-conductor shielded cable from one unit to the next unit until there is cabling run to all of the units.
3. Connect the 3-conductor cable to each unit's **NETWORK** terminals.

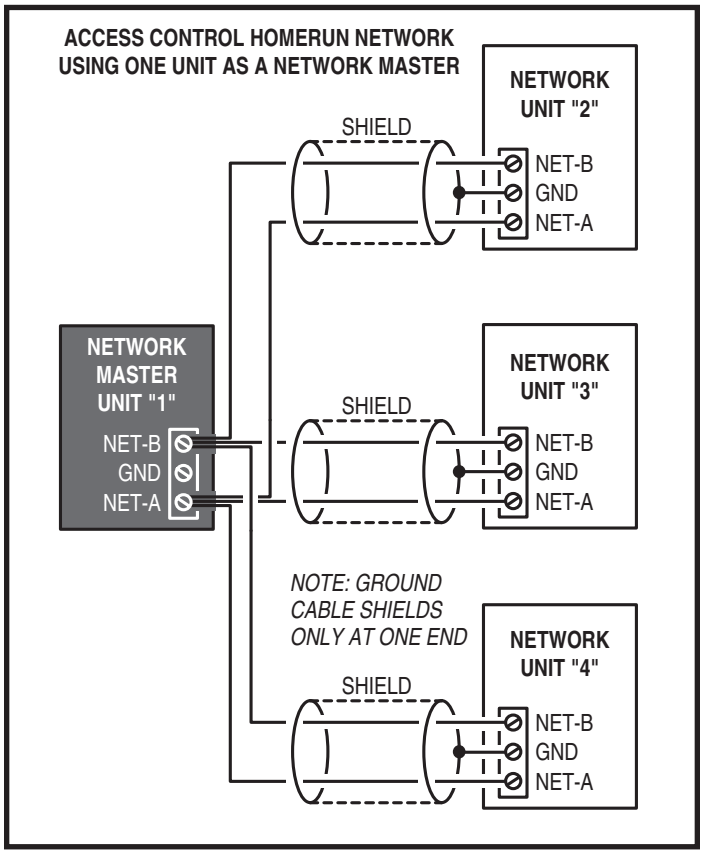

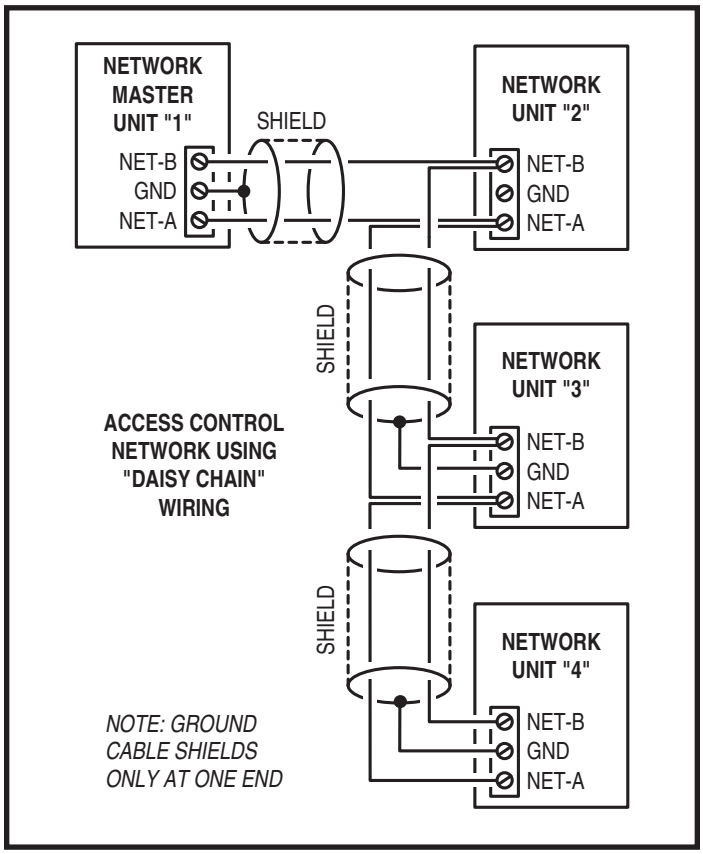

System Controls

Pushbuttons

Refer to the figure for the location of each of the eight pushbuttons.

- **SYSTEM RESTART BUTTON** will reboot the system's microcontroller. NO SYSTEM INFORMATION WILL BE ERASED.
- **ENTER BUTTON** press to accept the value on the STATUS/PROGRAM display during programming, press to clear an indication during the supervisory display.
- **"UP" BUTTON** adds one to the value on the STATUS/PROGRAM display.
- **"DOWN" BUTTON** subtracts one from value on the STATUS/PROGRAM display.
- **RELAY "A" LATCH** press to latch relay "A", press again to un-latch.
- **RELAY "B" LATCH** press to latch relay "B", press again to un-latch.
- **RELAY "C" LATCH** press to latch relay "C", press again to un-latch.
- **RELAY "D" LATCH** press to latch relay "D", press again to un-latch.

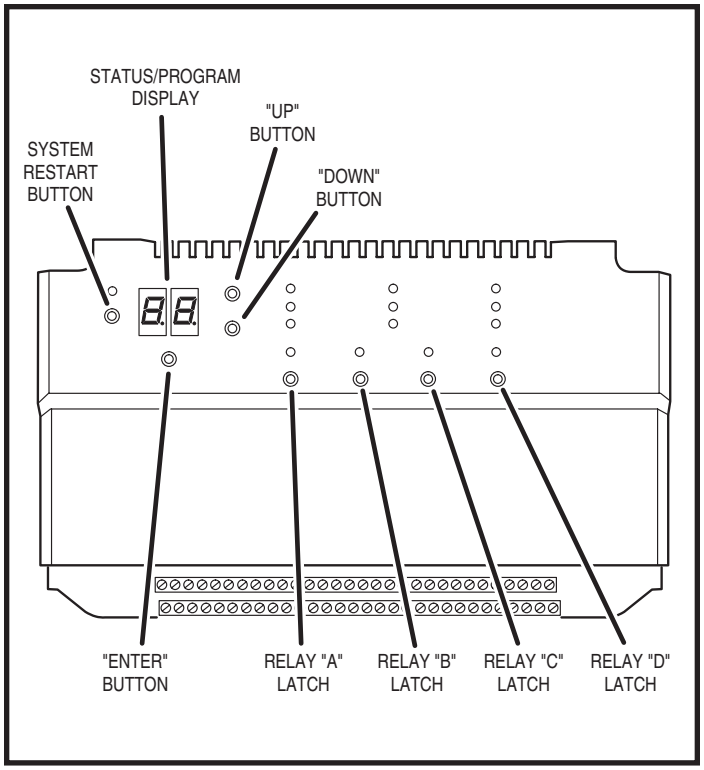

Display

The STATUS/PROGRAM display will show system conditions and can be used to aid system setup.

Status Mode

While the system is running, the display will show the current system status. Normally the left digit will show a moving pattern and the right digit will show the unit's Network Node number.

When a supervisory condition exists, the display will cycle to show the condition(s). When an item is displayed, press the ENTER button to clear the display (clears the display only, the condition may still exist). Refer to the following table for the supervisory condition display codes.

STATUS MODE DISPLAY	
DISPLAY	**CONDITION**
01	MGT TRANSMITTER STATUS EXCEPTION
02	MGT TRANSMITTER LOW BATTERY
03	MGT TRANSMITTER TAMPER
04	AC POWER FAIL (BACKUP BATTERY REQUIRED)
05	CHANNEL "A" LOCKED CLOSED
06	CHANNEL "B" LOCKED CLOSED
07	CHANNEL "C" LOCKED CLOSED
08	CHANNEL "D" LOCKED CLOSED

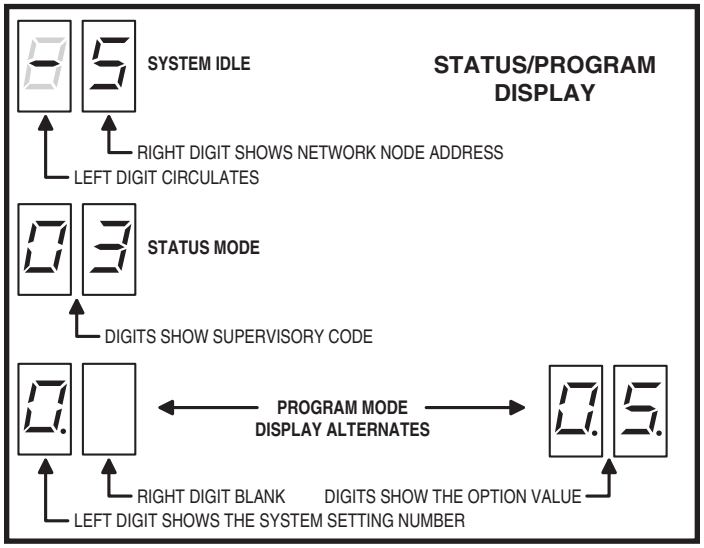

Program Mode

Options for up to ten system settings can be controlled in Program Mode. By viewing the STATUS/PROGRAM display and using the UP, DOWN, and ENTER pushbuttons, the various options can be set for each of the system settings.

Refer to the following steps to change the system settings:

1. To enter Program Mode, press and hold the UP and DOWN pushbuttons for one second.
2. The display will alternate between the system setting number and the option value currently set for it. When showing the system setting number, the left digit of the display will show the system setting number (0-9) and the right digit of the display will be blank. When showing the option value both display digits are used to show the 2-digit option value.
3. Press the ENTER button while the system setting number is displayed to advance the system setting number.
4. Press the UP or DOWN button while the option value is displayed to change the option value.

✦ ***NOTE:*** *A unique network address (1-8) must be set before communicating with network. The master node must be set to 1 (default).*

PROGRAM MODE DISPLAY	
SYSTEM SETTING NUMBER	**VALID OPTION VALUES**
0	NETWORK NODE ADDRESS 00-08

System Diagnostics

Several indicators on the AM-3 are for monitoring the system during operation. When calling for technical assistance, Linear's Technical Services Department may ask the installer to use these indicators to diagnose the system.

Indicators

15 LED indicators are on the AM-3. Refer to the figure for the location of each indicator.

- **POWER** lights when AC or DC power is present.
- **STATUS/PROGRAM DISPLAY** shows supervisory and status conditions, also used for some local programming.
- **DECODE** lights when a credential has been successfully decoded.
- **VALIDATE** lights when a credential is determined to be valid.
- **ACCESS GRANTED** lights when a credential is validated and access is granted.
- **PBUS** blinks when any PBUS device is successively decoded.
- **READER "A"** flashes when Wiegand A device is successively decoded.
- **READER "B"** flashes when Wiegand B device is successively decoded.
- **NETWORK** flashes in response to network traffic.
- **NETWORK HOST ON-LINE** lights when the Host PC is connected to the Master Node.
- **BACKUP BATTERY LOW** lights when backup battery measures low.
- **RELAY "A" ACTIVE** lights when the Channel "A" relay is energized.
- **RELAY "B" ACTIVE** lights when the Channel "B" relay is energized.
- **RELAY "C" ACTIVE** lights when the Channel "C" relay is energized.
- **RELAY "D" ACTIVE** lights when the Channel "D" relay is energized.

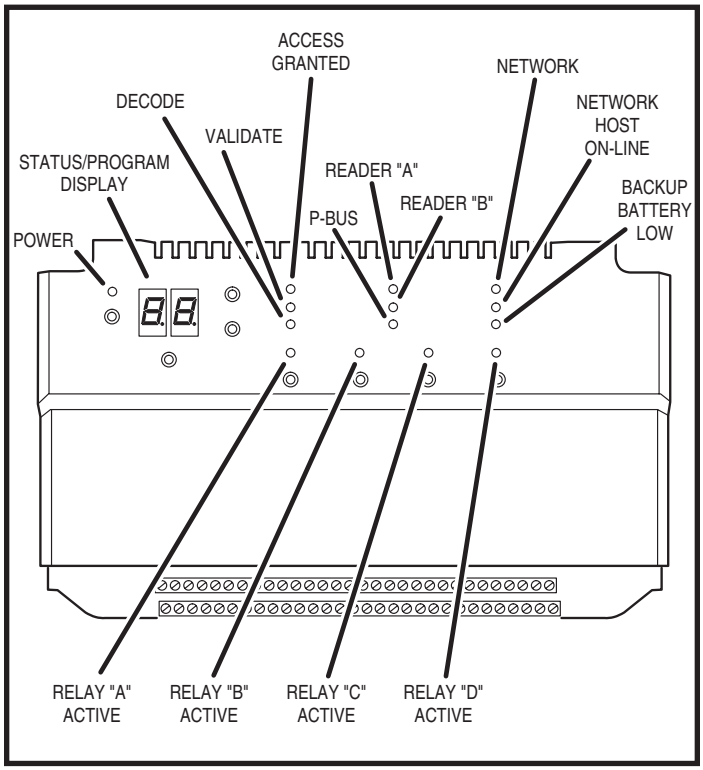

Specifications

MECHANICAL

Case dimensions: 11.5" W x 12.5" H x 3.5" D

ELECTRICAL

Voltage: 16-24 Volts AC or 12-24 Volts DC
Current: 850 mA maximum @ 12 Volts DC
Backup Battery: 12 Volt DC
Outputs: Relay Channels A-D
Form "C" 3 Amps @ 30 Volts maximum
Inputs: Four normally closed door sense inputs
Four normally open request-to-exit inputs
Two WIEGAND reader inputs
Two PBUS inputs
Network: Three-wire network

ENVIRONMENTAL

Temperature: -22°F to 149°F (-30°C to 65°C)
Humidity: 5% to 95% non-condensing

Troubleshooting

System completely dead

1. No power from transformer. Check voltage at AM-3 transformer terminals.

System will not answer an incoming call

1. Automatic telephone answer disabled.
2. AM-3 telephone line trouble.
3. ACM-1 Modem not installed or not installed correctly (check that all the modem pins are correctly in the modem socket).

Entry code will not activate relay

1. Entry code not set up for proper relay.

Remote PBUS device does not work

1. Check remote device address switch setting.
2. Check remote device for power.

Remote keypad will not activate a relay

1. Entry code is not assigned.
2. Keypad may be in lockout from too many incorrect attempts. Wait one minute for lockout to clear and try again.

Transmitter does not activate relay

1. Transmitter button setting programmed to “no relay” (would effect all transmitters).
2. Transmitter block not enrolled.
3. Specific transmitter is deactivated in the system.

Linear Limited Warranty

This Linear product is warranted against defects in material and workmanship for twenty-four (24) months. The Warranty Expiration Date is labeled on the product. This warranty extends only to wholesale customers who buy direct from Linear or through Linear’s normal distribution channels. Linear does not warrant this product to consumers. Consumers should inquire from their selling dealer as to the nature of the dealer’s warranty, if any. **There are no obligations or liabilities on the part of Linear Corporation for consequential damages arising out of or in connection with use or performance of this product or other indirect damages with respect to loss of property, revenue, or profit, or cost of removal, installation, or reinstallation.** All implied warranties, including implied warranties for merchantability and implied warranties for fitness, are valid only until Warranty Expiration Date as labeled on the product. **This Linear Corporation Warranty is in lieu of all other warranties express or implied.**

All products returned for warranty service require a Return Product Authorization Number (RPA#). Contact Linear Technical Services at 1-800-421-1587 for an RPA# and other important details.

FCC Notice

Changes or modifications not expressly described in this manual or approved by the manufacturer could void the user’s authority to operate the equipment.

This equipment has been tested and found to comply with the limits for a Class B digital device, pursuant to Part 15 of the FCC Rules. These limits are designed to provide reasonable protection against harmful interference in a residential installation. This equipment generates, uses and can radiate radio frequency energy and, if not installed and used in accordance with the instructions, may cause harmful interference to radio communications. However, there is no guarantee that interference will not occur in a particular installation. If this equipment does cause harmful interference to radio or television reception, which can be determined by turning the equipment off and on, the user is encouraged to try to correct the interference by one or more of the following measures:

- Reorient or relocate the receiving antenna.
- Increase the separation between the equipment and receiver.
- Connect the equipment into an outlet on a circuit different from that to which the receiver is connected.
- Consult the dealer or an experienced radio/TV technician for help.

Linear ACCESS

Copyright © 2004 Linear Corporation