As of date of manufacture, meets all ANSI/UL 325 Safety Requirements for Vehicular Garage Door Openers

Residential Vehicular Garage Door Opener

Model MVP-SB SUPER BELT

INSTALLATION AND OWNER'S MANUAL

INSTALLER: Place this manual in the plastic envelope provided and permanently attach to the wall near the pushbutton.

104334

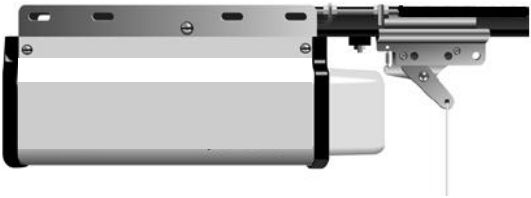

READ THIS MANUAL CAREFULLY BEFORE INSTALLATION OR USE

TABLE OF CONTENTS

Product Features 2
Component Identification 3
Identify Your Door Type 3
Important Installation Instructions 4
Assembly Instructions 5
Installing the Opener 7
- **Mounting the Front Bracket** 7
- **Mounting the Power Head** 7
- **Power Requirements/Permanent Wiring** 8

Control and Auxiliary Equipment 9
- **Installation of the Super Station** 9
- **Standard Wall Push Button Installation** 9
- **Installation of Safe Finish Photosystem** 10
- **Important Safety Instructions** 11

Installation Checklist 12
Operation and Adjustment Instructions 12
- **Basic Operating Parameters** 12
- **Door Arm Connection** 13
- **Programming The Radio System** 14
- **FCC and IC Radio Operation Statement** 15
- **Testing the Limit Settings** 16
- **Testing the Sensitivity** 16
- **Testing the Reversing System** 16
- **Testing the Safe Finish Photosystem** 17
- **Operating the Super Station** 17

Wiring Diagram 18
Using the Manual Release Mechanism 19
Troubleshooting Guide 19
Warranty Statement 20

READ THESE STATEMENTS CAREFULLY AND FOLLOW THE INSTRUCTIONS CLOSELY

The Warning and Caution boxes throughout this manual are there to protect you and your equipment. Pay close attention to these boxes as you follow the manual.

WARNING	CAUTION	WARNING	CAUTION
Indicates a MECHANICAL hazard of INJURY OR DEATH. Gives instructions to avoid the hazard.	Indicates a MECHANICAL hazard of DAMAGE to the door, door opener, or equipment. Gives instructions to avoid the hazard.	Indicates an ELECTRICAL hazard of INJURY OR DEATH. Gives instructions to avoid the hazard.	Indicates an ELECTRICAL hazard of DAMAGE to the door, door opener, or equipment. Gives instructions to avoid the hazard.

PRODUCT FEATURES

The purpose of this booklet is to provide assembly, installation and operation information concerning the herein described Residential Garage Door Opener and related Accessory Products.

NOTICE
IT IS IMPORTANT THAT THIS INSTRUCTION MANUAL BE READ AND UNDERSTOOD COMPLETELY BEFORE INSTALLATION OR OPERATION IS ATTEMPTED.

NOTICE
THE IMPORTANT SAFEGUARDS AND INSTRUCTIONS IN THIS MANUAL CANNOT COVER ALL POSSIBLE CONDITIONS AND SITUATIONS WHICH MAY OCCUR DURING ITS USE. IT MUST BE UNDERSTOOD THAT COMMON SENSE AND CAUTION MUST BE EXERCISED BY THE PERSON(S) INSTALLING, MAINTAINING AND OPERATING THE EQUIPMENT DESCRIBED HEREIN. DO NOT USE THIS EQUIPMENT FOR ANY OTHER THAN ITS INTENDED PURPOSE - OPERATING OVERHEAD GARAGE DOORS.

STANDARD FEATURES:

Digital Radio Controls: This opener is equipped with a pre-programmed transmitter to one of over nineteen thousand private codes. The transmitter can be re-programmed without difficulty using the external operation buttons. The power head is easily programmed to accept the transmitter signal. (Page 14)

Safe Finish™ Photosystem: An invisible infrared beam of light guards the door opening and reverses a downward moving door if the beam is broken by a stationary or moving object. The motor control circuitry constantly monitors the **Safe Finish™ Photosystem** for proper operation.

Super Station (Deluxe Wall Push Button): A feature-packed accessory unit, the Super Station allows access to all of the opener's functions. Independent Open, Close, and Stop buttons permits full control of the door's operation. The opener's built-in light can be turned on or off independent of door operation. A Learn Enable button allows programming of the radio controls at floor level. A Security Switch allows the opener to be deactivated for extended periods of time. A Security Disable switch is provided if the garage door is the only entryway into the garage. Lighted Push Buttons enhance nighttime use. (Page 17)

Manual Release: A pull cord allows separation of the drive mechanism and manual operation of the door when desired, as in the event of a power failure. The trolley release can be set to lock out automatic reconnection if desired. (Page19)

Automatic Reconnection: Once power is restored, or normal operation of the door is again desired, the trolley release can be set so initiating operation in the normal manner (Push Button, Radio Control, etc.) will effect automatic reconnection of the Manual Release Mechanism. (Page 19)

Alternating Action Operation: The mechanical wall pushbutton functions in an Open/Stop/Close/ Stop & Reverse mode in normal operation. (Page 12)

Sensing System: A built-in sensing system detects obstructions during door operation. If in the downward (close) travel mode, the opener will sense an obstruction and reverse the direction of the door. In the open mode, the opener will stop. Since all doors are different, the Sensing System has independent adjustments for customizing the level of force required for the normal opening and closing of specified doors. (Page 16)

Close Limit Switch: In winter months it's common for small pieces of ice or packed snow to be trapped under the door. Ground swelling can also effect the close limit setting of the opener. The opener's Close Limit Switch overrides the Sensing System during the last one inch of closing travel and prevents the door from reversing if it encounters an obstruction at this point.

Constant Contact To Close Operation: For utmost safety and security, the operation mode allows constant contact on the mechanical Push Button to close the door if the **Safe Finish™ Photosystem** beam becomes misaligned or if there is an irregularity in the wiring to the device. In this mode of operation, a Radio Transmitter cannot be used to close the door.

OPTIONAL FEATURES:

Keyless Entry System: A tamper resistant outdoor keypad, the optional Keyless Entry System permits entry to the garage without use of key or radio transmitter. Easily programmable, it accommodates a four digit PIN code (10,000 possible codes). Lighted Buttons enhance nighttime use.

TOOLS REQUIRED FOR INSTALLATION

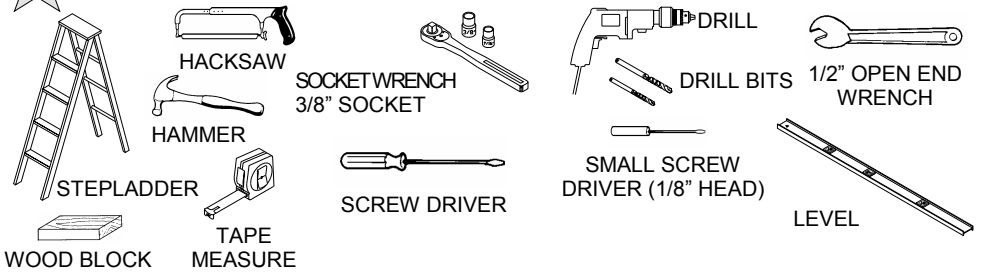

COMPONENT IDENTIFICATION

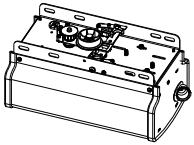
OPENER POWER UNIT

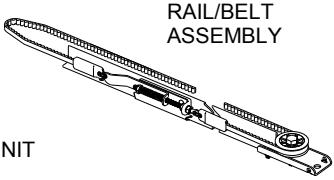
RAIL/BELT ASSEMBLY

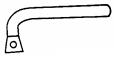
DOOR ARM TUBE ASSEMBLY

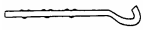
DOOR ARM ROD

CONTROL WIRE SPOOL

DOOR MOUNTING BRACKET

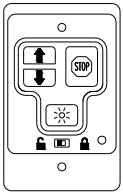

SUPER STATION DELUXE WALL PUSH BUTTON

BELT GUARD

RADIO TRANSMITTER

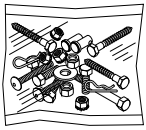
OPENER HARDWARE PACKET

RELEASE ROPE AND KNOB

TROLLEY OUTER HALF

WALL MOUNTING BRACKET

RUBBER BUMPER

PUSHBUTTON "WARNING" LABEL

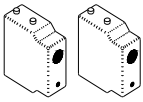
SAFE FINISH PHOTOSYSTEM

PHOTOSYSTEM HARDWARE

DOOR TYPE IDENTIFICATION

IMPORTANT - IDENTIFY YOUR DOOR TYPE FROM THOSE ILLUSTRATED BELOW

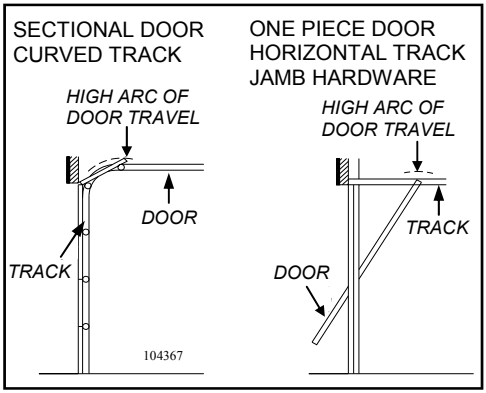

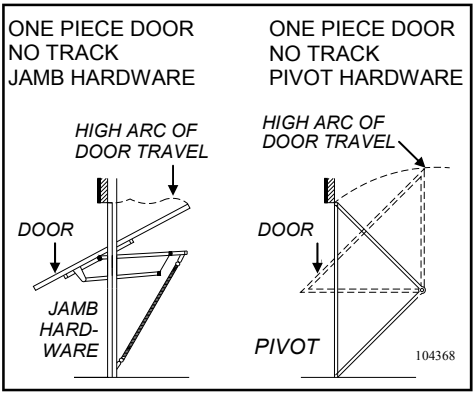

FOR THESE TYPES OF DOORS USE MODEL MVP-SB SuperBelt - USE 7 FT OR 8 FT RAIL (MATCH DOOR HEIGHT)

MVP-SB SuperBelt <u>CANNOT</u> BE USED FOR THESE TYPES OF DOORS

WARNING

SPRINGS, PULLEYS, CABLES AND MOUNTING HARDWARE USED TO BALANCE YOUR GARAGE DOOR ARE UNDER EXTREME TENSION AT ALL TIMES AND CAN CAUSE SEVERE INJURY OR DEATH IF DISTURBED. DO NOT ATTEMPT ADJUSTMENT.

IMPORTANT INSTALLATION INSTRUCTIONS

⚠ WARNING! TO REDUCE THE RISK OF SEVERE INJURY OR DEATH

READ AND FOLLOW ALL INSTALLATION INSTRUCTIONS!

AN UNBALANCED DOOR OR ONE THAT STICKS OR BINDS MAY PREVENT THE SENSING SYSTEM FROM WORKING PROPERLY, CAUSING INJURY OR DEATH. ENSURE DOOR IS PROPERLY BALANCED AND ELIMINATE ANY STICKING OR BINDING PRIOR TO INSTALLATION OF OPERATOR. A properly balanced door will open slowly from a 3/4 open position, close slowly from a 3/4 closed position, and remain still at a 1/2 open position. If the door is not properly balanced, HAVE A QUALIFIED SERVICE PERSON MAKE REPAIRS TO CABLES, SPRING ASSEMBLIES AND OTHER DOOR HARDWARE BEFORE INSTALLING THE OPENER.

YOUR GARAGE DOOR IS THE LARGEST MOVING OBJECT IN YOUR HOUSE, THE SPRINGS, PULLEYS, CABLES AND MOUNTING HARDWARE UTILIZED TO BALANCE ITS OPERATION ARE UNDER EXTREME TENSION AT ALL TIMES AND CAN CAUSE SERIOUS PERSONAL INJURY, EVEN DEATH, IF DISTURBED. DO NOT ATTEMPT ADJUSTMENT. CALL A QUALIFIED SERVICE PERSON TO MOVE, LOOSEN OR ADJUST DOOR SPRINGS OR HARDWARE.

REMOVE ALL ROPES AND REMOVE OR MAKE INOPERATIVE ALL LOCKS CONNECTED TO THE GARAGE DOOR BEFORE INSTALLING THE OPENER.

DO NOT WEAR RINGS, WATCHES OR LOOSE CLOTHING WHILE INSTALLING OR SERVICING GARAGE DOOR OPENERS. WEAR SAFETY GOGGLES OR OTHER PROTECTIVE EYEWEAR.

IF POSSIBLE, INSTALL THE DOOR OPENER 7 FT OR MORE ABOVE THE FLOOR. MOUNT THE EMERGENCY RELEASE 6 FT ABOVE THE FLOOR.

REINFORCE LIGHTWEIGHT FIBERGLASS, ALUMINUM AND STEEL DOOR TOP SECTIONS TO AVOID DAMAGE AND TO INSURE PROPER OPERATION OF THE SAFETY REVERSE SYSTEM. CONTACT YOUR DOOR MANUFACTURER FOR A REINFORCEMENT KIT.

DO NOT CONNECT THE OPENER TO A POWER SOURCE UNTIL INSTRUCTED TO DO SO.

CHECK LOCAL BUILDING AND ELECTRICAL CODES FOR MANDATORY INSTALLATION AND WIRING REQUIREMENTS.

CONNECT POWER CORD ONLY TO A PROPERLY GROUNDED OUTLET. IF PERMANENT WIRING IS REQUIRED BY CODES, DISCONNECT POWER AT FUSE BOX OR CIRCUIT BREAKER BEFORE ATTEMPTING ANY WIRING CONNECTIONS.

LOCATE THE CONTROL PUSH BUTTON:

- WITHIN SIGHT OF THE DOOR, AND,
- AT A MINIMUM HEIGHT OF 5 FT SO SMALL CHILDREN CAN'T REACH IT, AND,
- AWAY FROM MOVING PARTS OF THE DOOR.

INSTALL THE ENTRAPMENT WARNING LABEL NEXT TO THE CONTROL PUSH BUTTON IN A PROMINENT LOCATION. INSTALL THE EMERGENCY RELEASE INSTRUCTION CARD, ATTACHING IT ON OR NEXT TO THE EMERGENCY RELEASE.

ADJUST THE SENSITIVITY ADJUSTMENTS ENOUGH TO ALLOW THE DOOR TO OPERATE, BUT NOT SO FIRMLY AS TO EXERT EXCESSIVE PRESSURE ON AN OBSTRUCTION BEFORE REVERSING.

AFTER INSTALLING THE OPENER, THE DOOR SHOULD REVERSE WHEN IT CONTACTS A 1-1/2" HIGH OBJECT (A PIECE OF STANDARD 2 X 4 BOARD LAID FLAT) ON THE FLOOR.

NOTE: The Tee Rail/Belt Assembly is packaged separately from the Power Unit. The Inner Trolley half, Front Idler Sprocket, Belt, and Limit Cams are assembled on the Tee Rail at the factory. Follow the steps outlined below to complete assembly prior to installation. Refer to the Component Identification illustrations on page 3.

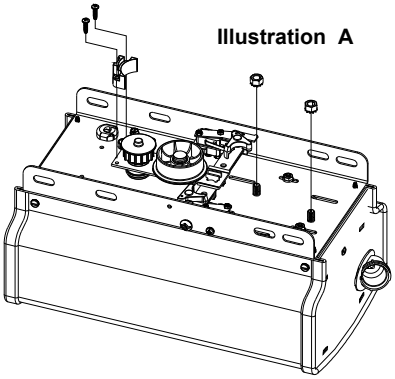
Illustration A

STEP 1: Unpack the Power Unit box, separate and verify the items shrink wrapped on the cardboard packaging (see Component Identification illustrations on Page 3). Protect the Power Unit cover from scratching during assembly by placing it on cardboard. Remove the two 5/16"-18 washered nuts and the Belt Retaining Block and save them for re-installation later, see Illustration A.

STEP 2: Unpack and position the Tee Rail/Belt Assembly near the Power Unit. Locate the Trolley Outer Half and the operator Installation Hardware Packet (see Component Identification illustrations on Page 3).

STEP 3: Slide the Trolley Outer Half onto the Tee Rail/Belt Assembly with the **arrow on theTrolley pointing toward the Door (Front Idler)**, see Illustration B. Lock the Trolley Outer Half onto the Inner Half .

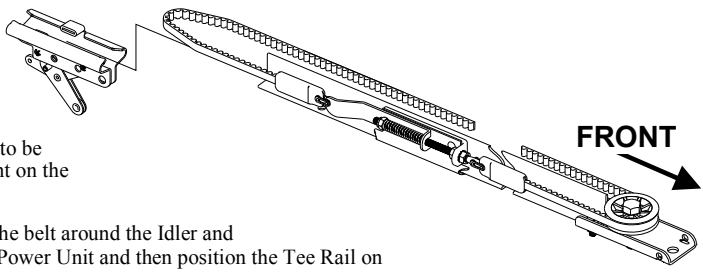

Illustration B

STEP 4: Remove and discard the tape used to keep the belt looped at the one end on the rail assembly during shipping. Position the trolley assembly to be at approximately the mid point on the rail.

STEP 5: Loop that end of the belt around the Idler and Drive Sprocket on top of the Power Unit and then position the Tee Rail on the studs, see Illustration C. Secure with the two nuts removed in Step 1.

Slightly tension the belt by tightening the outer nut on the belt tension spoon, this will begin to compress the blue spring, see Illustration D. **Remove and discard** the tape at each end of the Tee Rail Assembly. After double-checking the belt's alignment with the Drive Sprocket on the Power Unit and Front Idler Wheel on the opposite end of the rail assembly, fully tension the belt by tightening the outer nut on the belt tension spoon until approximately 1 inch of threads is showing on the rod, making sure the belt does not twist. **When correctly adjusted, the belt should show no droop and be approximately 1/2" above the base of the Tee Rail.**

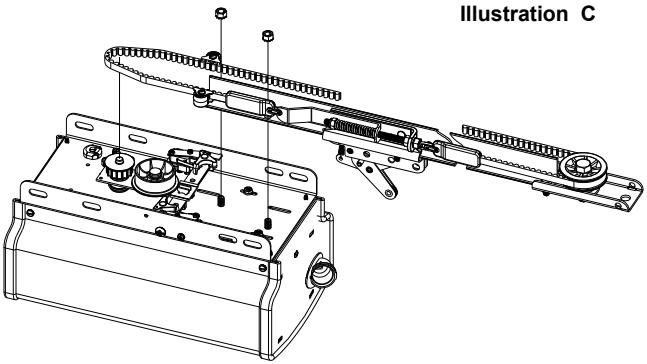
Illustration C

STEP 6: VERY IMPORTANT: REINSTALL THE BELT RETAINING BLOCK REMOVED IN STEP 1 AT THIS TIME. SEE ILLUSTRATION E. Failure to reinstall the Belt Retaining Block may cause the operator to not reverse correctly. Tighten the two screws to securely hold the Belt Retaining Block in place.

Install the Belt Guard by seating the guard over the the Drive Sprocket and Rear Idler Pulley on the power unit and snapping into place, see Illustration E. When properly fitted the center round protrusion on the Drive Sprocket fits in the hole in the rear of the Belt Guard and the front of the Belt Guard fits over the Sensing Plate stud. The Belt Guard should not interfere with the belt, drive sprocket or idler pulley in any way. The Limit Cams are installed at the factory. Their settings should be considered temporary and may be changed as required during installation. See Page 16 "Limit Settings.

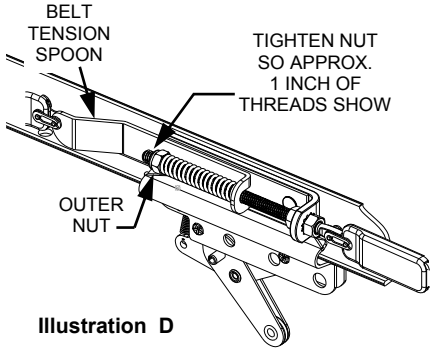

Illustration D

NOTE: If the belt is too loose or too tight, improper operation and/or excessive noise may result.

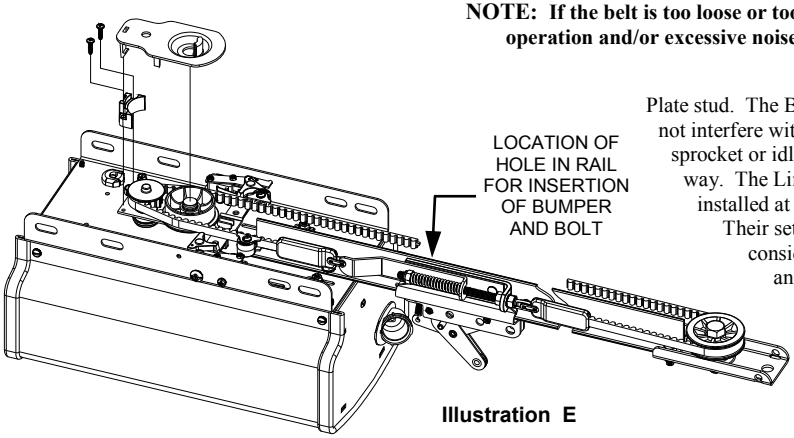

Illustration E

STEP 7: Install the Rubber Bumper into its mounting hole on the Tee Rail (see Illustration E for location). Secure the Bumper to the bottom of the Tee Rail using one 5/16-18 x 1" hex head bolt and one 5/16"-18 washered nut (supplied)
Tighten the bolt a MAXIMUM of 1.5 additional turns after the bolt and nut are snug.

STEP 8: Recheck the nuts used to secure the Tee Rail to the Power Unit, making sure they are tight. **Recheck** that the Belt Retaining Block has been reinstalled, the belt tension is proper, there is no belt twist, the Belt Guard is in place, and the position of both the Close Limit Switch and Open Limit Switch Actuators is appropriate to accept the limit cams on the belt.

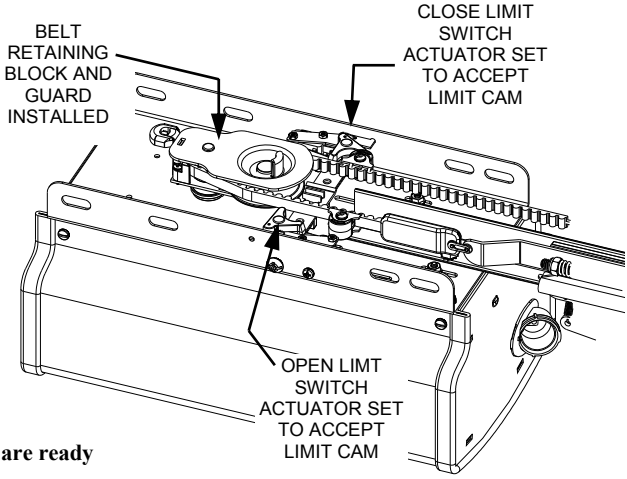

Assembly is now complete and you are ready to begin installation of the opener.

INSTALLING THE OPERATOR

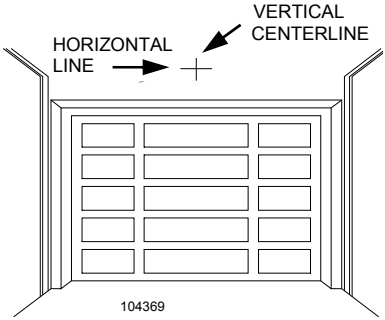

STEP 1: Mounting the Front Bracket — Sectional Doors and One-Piece Doors *with Track*: Mark a vertical centerline on the header above the door. By manually raising the door, determine the high arc of the door's travel (see illustrations on page 4) and using a level, transfer this measurement to the header (see illustration at left). Draw a horizontal line, crossing the previously drawn centerline, at this point. Install the Front Mounting Bracket securely with the lag screws as illustrated below. If necessary, reinforce the header with steel angle iron or wood to ensure a secure mount.

WARNING

FRONT MOUNTING BRACKET MUST BE INSTALLED TO A STRUCTURAL SUPPORT (STUD) ON THE HEADER WALL. FAILURE TO DO SO COULD CAUSE SENSING SYSTEM TO MALFUNCTION, RESULTING IN ENTRAPMENT, INJURY OR DEATH. REINFORCE HEADER IF NECESSARY USING A 2 x 6 AND LAG SCREWS (NOT PROVIDED).

Mount the Front Mounting Bracket securely with lag screws as shown in figure below. If necessary, reinforce the header with steel angle iron or wood to ensure a secure mount.

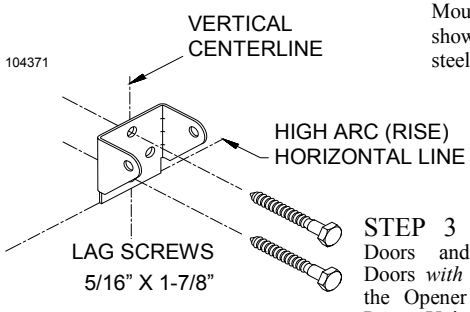

STEP 2: Raise the Tee Rail so that the Front Idler Bracket and Front Mounting Bracket align. Insert bolt and tighten nut loosely for now. Later in the installation, this nut must be tightened securely.

STEP 3 — Sectional Doors and One Piece Doors *with* Track: Raise the Opener and rest the Power Unit on a ladder or other sturdy support. Open the door to the full open position. Allow 2" of space between the Tee Rail and the top section of the door (as shown in the below left illustration).

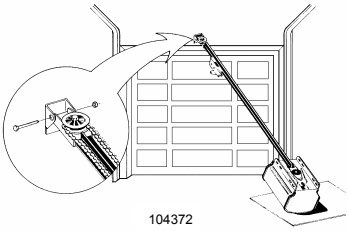

NOTE: Since the opener will be secured permanently in this position, open and close the door a few times to be sure the door does not rub on the Tee Rail and that you have allowed the proper clearances before proceeding.

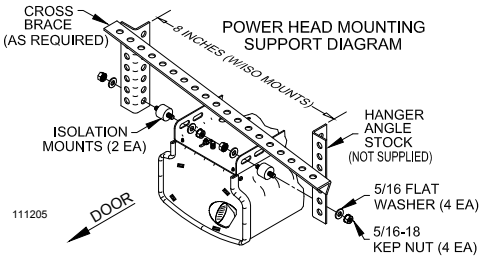

STEP 4: Mount Power Head to Ceiling: Since there is such variety in ceiling structures, all the mounting possibilities for the Power Unit cannot be illustrated here. The main concern is mounting the Power Unit securely to the ceiling joists for operational strength, rigidity and safety. Although there are a series of mounting slots provided on the power unit, try to **secure the hanger angle in the slots closest to the front.** Mounting may usually be accomplished using standard 1-1/4" perforated steel angle available at most hardware stores. If in doubt

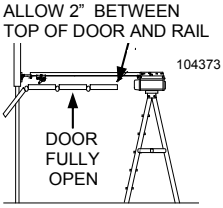

about location of, and attachment to, ceiling joists, a carpenter should be contacted to provide assistance. A cross brace will be necessary if the power head is mounted 8" or more from the ceiling, see illustration at bottom of previous page. Attach a kick brace from the hanger angle to an opposite end Power Unit mounting hole to provide horizontal stability as shown. Optionally a hanger angle at the opposite end mounting hole can be used to provide horizontal stability.

STEP 5: **Return to the "T" Rail/Front Mounting Bracket** and securely tighten the bolt and nut that connect the Tee Rail Front Idler bracket and the Front Mounting Bracket. (See Step 2, previous).

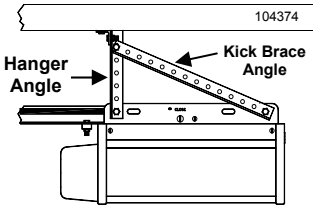

STEP 6: Tie a **double overhand knot** in one end of the Manual Release Rope and slip the other end through the red Release Handle, the Release Instruction Card, and the hole at the end of the Release Lever on the Trolley. Tie a second **double overhand knot in the free end**, adjusting the Rope so that the **Red Handle is 6 FT above the floor**. If the Rope must be cut, flame seal the cut end with a match or lighter.

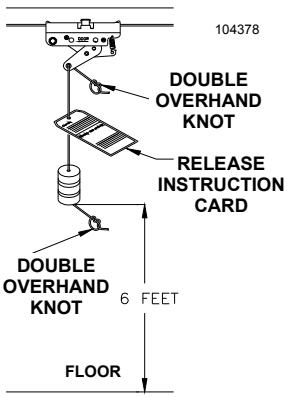

WARNING

DISCONNECT POWER AT FUSE BOX AND OPENER BEFORE WIRING PERMANENTLY TO PREVENT ELECTROCUTION.

Step 9: Consult the label on the rear panel of the Opener to determine its proper working voltage. Normally it will be marked for 115V, 60 cycle operation. (If it is an export model designed for 230V, 50 cycle operation, the label will clearly indicate this.) The opener must be plugged into a properly grounded receptacle within 3 FT of the Power Unit. Do not use 2-prong adapters and do not use extension cords for anything more than temporary hook-up and testing purposes. Receptacle wiring should be No. 14 or heavier, and **must be in compliance with local building and electrical codes.**

If local codes require permanent wiring, a resettable, 15 Amp circuit breaker is recommended to protect the line. Remove the Strain Relief Bushing and withdraw the Line Cord from the rear of the Power Unit to expose the three insulated connectors. Cut the wire at the rubber jacket of the Line Cord and wire in permanently, employing proper wiring practices. Discard Strain Relief. It is not used with permanent wiring

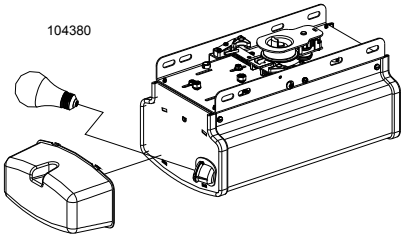

Step 10: Install a **Rough Service** lamp bulb (75 Watt maximum) firmly in the light socket. Light bulbs in door openers are subject to vibration during normal operation which may shorten their life spans. Rough Service bulbs, available at most hardware stores, are recommended. Fit Light Diffuser tabs into the panel slots as shown.

WARNING

IMPROPER WIRING COULD CAUSE ELECTROCUTION OR DAMAGE TO CIRCUITRY. FOLLOW LOCAL BUILDING AND ELECTRICAL CODES.

INSTALLATION OF THE SUPER STATION OR A STANDARD WALL PUSH BUTTON

The Super Station (Deluxe Wall Pushbutton Station) is a 7 function station designed to work with and maximize the operation of your opener. Connection to any other operator may damage the operator and/or the Super Station. Only connet one Super Station to the operator. Do not connect more than one Super Station to the Operator.
If desired, a standard wall push button may be installed and connected to your opener as an alternate to the Super Station or in addition to the Super Station. A standard wall push button is not included in your hardware package, it can be purchased from your professional installing dealer or a door bell button [without light] can be substituted. The operating parameters for the standard wall push button are outlined on a page that follows to see if that mode of operation is right for you. The Super Station is included with your opener and it's installation is recommended, the Super Station will provide full control over the garage door at all times.

YOU MAY CONNECT ONLY ONE SUPER STATION PER OPERATOR - ADDITIONAL STANDARD WALL PUSH BUTTONS MAY BE CONNECTED TO THE OPERATOR

STEP 1: After determining a suitable location, usually near the access door and at least 5 feet above the floor to prevent use by children, use the Super Station or the standard wall push button as a guide to mark the mounting holes. Drill holes for drywall anchors or screws. NOTE: Do not mount directly to masonry walls. Use backer board.

of 2-conductor, #22 gauge wire (or heavier) is required to connect either control to the garage door operator. Strip approximately 2" of the wire jacket from one end and 1/2" of insulation from each wire. Carefully connect one wire to each of the two terminals. Carefully tuck the loose wires into the case

WARNING

A CHILD OPERATING THE DOOR CONTROLS RISKS INJURY — OR DEATH — TO HIMSELF AND OTHERS. DO NOT ALLOW CHILDREN TO OPERATE *ANY* DOOR CONTROLS. MOUNT THE PUSHBUTTON AT LEAST 5 FT FROM THE FLOOR, OUT OF REACH OF CHILDREN.

and mount the unit using appropriate screws.

STEP 3: Run the wire from the control to the operator, supporting it at 18" intervals with suitable staples. Leave a sufficient length to make the necessary connections to the operator terminal strip.

WARNING: SOME LOCAL BUILDING CODES DO NOT ALLOW SURFACE WIRING. BE SAFE AND CHECK WITH YOUR LOCAL BUILDING INSPECTOR FIRST.

WARNING

IMPROPER DOOR OPERATION COULD CAUSE INJURY OR DEATH. WARNING LABEL MUST BE MOUNTED ON WALL NEAR THE PUSHBUTTON. ALL WARNINGS AND INSTRUCTIONS ON THE LABEL SHOULD BE STRICTLY ADHERED TO.

STEP 4: Ensure power is OFF to the opener or disconnect the power from the opener. Strip approximately 4" of jacket from the end of the wire and 1/2" insulation from each wire. Connect to terminals 0 and 1 as shown in the illustration at left. Support the wire near the operator with wire ties.

See Step 5, next page.

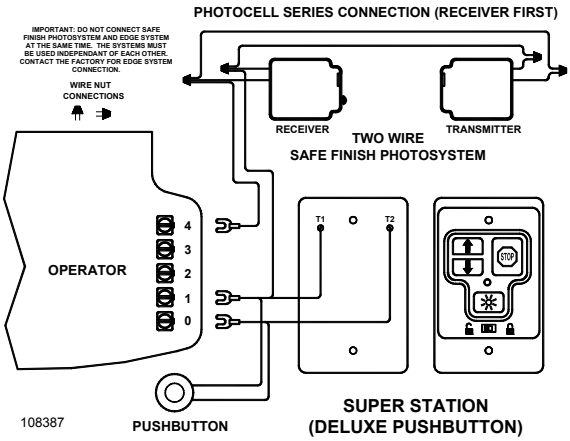

CONTROL BUTTON WARNING LABEL

Step 5: Install a Control Button Warning Label near each control station, see illustration on previous page. One label is supplied with your opener. Contact your installing Dealer or the factory for additional warning labels.

INSTALLATION OF 2 WIRE SAFE FINISH PHOTOSYSTEM

STEP 1: Mark the position of the SAFE FINISH™ Photosystem as follows: Mark a line on the left and right door jamb (close to the door track) **FOUR (4)** inches **AND SIX (6)** inches above the floor. *The top mark is the maximum height and the bottom line is the minimum height that the photosystem accessory can be placed.*

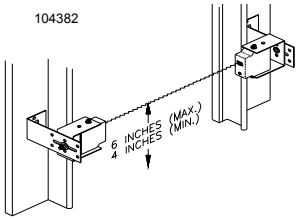

STEP 2: Mount the Photosystem "L" Brackets as follows:

A. Remove the four mounting brackets from the package. Temporarily place the "U" shaped brackets, one around the receiver (unit with window and red LED) and one around the transmitter. **NOTE:** *It is easier to slip the photosystem units in from the side of the bracket than forcing them in from the front of the bracket.*

WARNING

AN AUTOMATIC GARAGE DOOR SYSTEM POSES A THREAT OF INJURY OR EVEN DEATH. INSTALL THE SAFE FINISH PHOTOSYSTEM NO HIGHER THAN 6" ABOVE THE GARAGE FLOOR TO REDUCE THE RISK TO SMALL CHILDREN.

B. Your photosystem assembly is provided with a universal bracket set. Using either the transmitter or receiver (window up towards the ceiling), hold the "L" bracket and the "U" bracket set together while moving them in between the limit marks on the door jamb. Continue to move the photosystem assembly within the limit marks until it clears the door hardware. *See Illustration, above*. Check to ensure the **WINDOW ON THE FRONT OF THE PHOTOSYSTEM UNIT IS WITHIN THE LIMIT MARKS ON THE DOOR JAMB.**

C. Place a mark in the center of the lag screw elongated mounting hole. Measure its position and place a similar mark on the opposite door jamb. The brackets may be temporarily mounted to the jamb with a 1" flat head nail (provided) using the small hole above the slot. Using two 5/16" X 1-1/2" lag screws (provided), permanently mount the "L" bracket to both door jambs.

STEP 3: Connect the Photosystem as follows:
A. Remove the transmitter and receiver from their "U" mounting brackets.

Refer to Page 9 and 11 for various wiring options for the Safe Finish™ Photosystem. Steps B and C, below, describe the wiring for Series Connection with Receiver First, as illustrated on Page 9.

B. Run a wire pair (not supplied) around the garage door jamb between the transmitter and receiver "L" mounting brackets. **NOTE:** Leave about 12" of extra wire at each end. Use a minimum 22 gauge solid "trace" wire for interconnect.

C. Run a wire pair (20 or 22 gage solid wire) from the receiver position (unit with "LED" light in the front, may be either side of the door) back to the rear

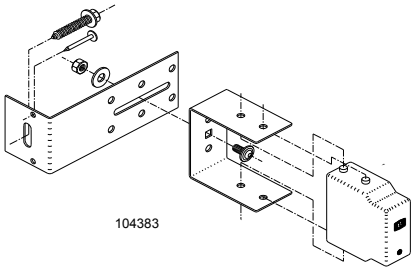

bulkhead of the garage door opener. **NOTE:** Leave about 12" of extra wire at the receiver end and about 24" of extra wire at the opener end.

D.Strip approximately 5/16" from each wire end at the photosystem units and at the opener.

E.Using two (2) wire nuts (supplied), connect the wire ends at the SAFE FINISH™ Photosystem transmitter to the pigtail wire ends coming out of the transmitter unit. *Although not required, it is recommended to connect the trace wire ends together and the unmarked wire ends together.*

F. Using two (2) wire nuts (supplied), connect the wire ends at the SAFE FINISH™ Photosystem receiver to the pigtail wire ends coming out of the receiver unit. *Although not required, it is recommended to connect the trace wire ends together and the unmarked wire ends together.*

STEP 4 :
Final Installation

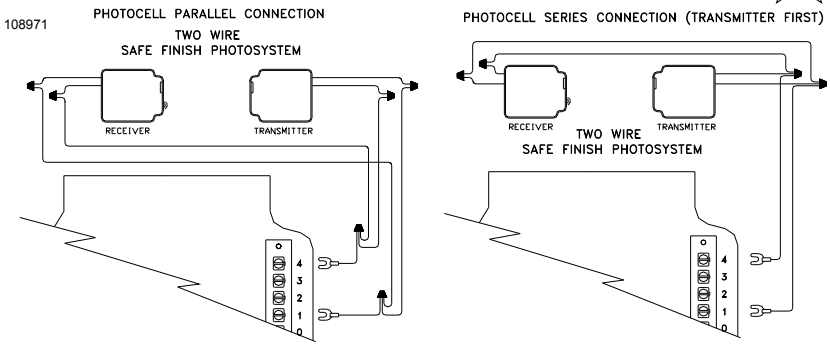

A. Attach the"U" brackets to the "L" brackets with a 1/4-20 carriage bolt, washer and hex nut (provided). Insert the bolt from the inside of the "U" bracket and hand tighten only at this time.

B. Place the transmitter and receiver units into their respective "U" brackets. *See Illustration, at right.*

C. Connect the interconnect wire pair to the garage door opener terminals marked **"1"** & **"4"**. *Although not required, it is suggested that the "trace" be connected to Terminal 4. See Wiring Diagram, Page 9.*

D. Tighten all mounting screws and bolts. Final alignment and the system test is covered on Page 17, Step 5 "Operation and Adjustment Instructions.

IMPORTANT SAFETY INSTRUCTIONS

⚠ WARNING! TO REDUCE THE RISK OF SEVERE INJURY OR DEATH

READ AND FOLLOW ALL INSTRUCTIONS!

- **NEVER LET CHILDREN OPERATE OR PLAY WITH DOOR CONTROLS. KEEP THE REMOTE CONTROL AWAY FROM CHILDREN.**
- **ALWAYS KEEP A MOVING DOOR IN SIGHT AND KEEP PEOPLE AND OBJECTS AWAY FROM THE DOOR AREA UNTIL THE DOOR IS COMPLETELY CLOSED. NO ONE SHOULD CROSS THE PATH OF A MOVING DOOR.**
- **NEVER GO UNDER A STOPPED, PARTIALLY OPEN DOOR.**
- **TEST THE DOOR OPENER MONTHLY. THE DOOR MUST REVERSE UPON CONTACT WITH A 1-1/2" HIGH OBJECT (OR A 2 X 4 BOARD LAID FLAT) ON THE FLOOR. AFTER ADJUSTING THE SENSITIVITY OR THE LIMIT OF TRAVEL, ALWAYS RETEST THE OPENER. FAILURE TO ADJUST THE OPENER PROPERLY MAY RESULT IN SERIOUS INJURY OR DEATH.**
- **IF POSSIBLE, USE THE EMERGENCY RELEASE ONLY WHEN THE DOOR IS CLOSED. USE CAUTION WHEN USING THE RELEASE WITH THE DOOR OPEN. WEAK OR BROKEN SPRINGS MAY ALLOW THE DOOR TO CLOSE RAPIDLY, CAUSING SEVERE INJURY OR DEATH.**
- **KEEP THE GARAGE DOOR PROPERLY BALANCED. SEE THE DOOR OWNER'S MANUAL. AN IMPROPERLY BALANCED DOOR MAY CAUSE SEVERE INJURY OR DEATH. HAVE A QUALIFIED SERVICE PERSON MAKE REPAIRS TO CABLES, SPRING ASSEMBLIES AND OTHER HARDWARE.**
- **SAVE THESE INSTRUCTIONS!**

PRE-POWER ON-
INSTALLATION CHECKLIST

Before continuing with the operation and adjustment section, make sure that:

1. The front and rear mounts for the operator are sound and secure and the rail is positioned correctly above the high arc of the door, and that the opener is positioned over the door action centerline.
2. The Manual Release Label and cord are secure to the Manual Release Lever and the handle is located 6 FT above floor level. The trolley and the release mechanism have been lubricated with a silicone spray.
3. The standard wall push button or the Super Station (deluxe wall push button station) is in such a position and of such a height that it can only be actuated by an adult of average height. The Control Button Warning label is prominently displayed next to the push button or wall station.
5. All wiring is correct to codes or better. There is ground continuity from the supply. The ground prong on the power cord is intact.
6. All ropes have been removed from the door. The door moves freely without binding when raised or lowered manually. The door is correctly balanced and lubricated. All door hardware is secure and sound. The sensitivity has been adjusted to minimum force for the application.
7. The plastic envelope for this manual is attached to the wall near the push button or wall station and this manual is placed there for owner use and reference.
9. On door with extension type counterbalance springs, restraint cables have been placed through the springs.
10. On doors with adjustable bottom edges, edges have been locked after adjustment.

TURNING ON POWER TO THE OPENER

NOTE: It is now necessary to turn on the power in order to run the opener to test the operation and check the limit settings. Before doing so, ensure that all mounting hardware is installed and has been properly tightened, that all electrical connections are per local code requirements, and that proper wiring practices have been followed. Also, double-check that all ropes have been removed from the door and that the doorway is clear.

BASIC OPERATING PARAMETERS

Please note the following Operating Parameters which apply to openers with Auxiliary Entrapment Protection System (Safe Finish™ Photosystem, Installation Instructions on Page 10) and a standard wall push button connected. Please see page 17 for instructions concerning the Super Station Deluxe Wall Push Button operating parameters.

IF THE DOOR IS…

...FULLY OPEN, then pushing the standard wall Push Button or the radio control will cause the door to begin **MOVING DOWNWARD.**

...FULLY CLOSED, then pushing the wall Push Button or the radio control will cause the door to begin **MOVING UPWARD.**

...MOVING UPWARD, then pushing the wall Push Button will cause the door to **STOP.** The next push of the wall button will cause the door to begin **MOVING DOWNWARD (Alternate Action Operation).**

...MOVING UPWARD, then pushing the radio control will cause the door to **STOP.** The next push of the wall button will cause the door to **RESUME UPWARD MOVEMENT (Radio Operation).**

...MOVING DOWNWARD, then pushing the wall Push Button or the radio control will cause the door to **STOP, PAUSE FOR APPROXIMATELY ONE SECOND, AND THEN BEGIN MOVING UPWARD.**

...MOVING DOWNWARD then reaches the down limit, the lamp will blink off for a 1/2 second then turn back on again, remaining on for 4 minutes 30 seconds and will then automatically turn off.

...MOVING UPWARD then reaches the open limit, the lamp will remain on for 4 minutes 30 seconds and will then automatically turn off.

At this time (before connecting the door arm) activate the door operator through 2 cycles of operation to verify proper limit function. The trolley should stop at a minimum of 2 inches before its front edge encounters the Stop Bolt on the rail (Closed Position) and a minimum of 4 inches before its back edge encounters the Stop Bolt on the opposite end of the rail (Open Position). Leave the trolley at the Closed Position on the rail.

CAUTION!

FIBERGLASS, ALUMINUM OR LIGHTWEIGHT STEEL GARAGE DOORS WILL REQUIRE REINFORCEMENT BEFORE INSTALLATION OF DOOR MOUNTING BRACKET. CONTACT YOUR DOOR MANUFACTURER FOR A REINFORCEMENT KIT OR INSTRUCTIONS.

DOOR ARM CONNECTION AND INSTALLATION

NOTE: If the door is of light construction IT IS necessary to reinforce the center stile with steel angle or wood to prevent damage to the door if it encounters an obstruction on closing.

Step 7: Connecting Door Arm to Trolley

The door arm assembly consists of the door arm tube section and door arm rod which are packaged separately. To assemble, screw the door arm rod into the the door arm tube in a clockwise direction

approximately ten turns. Connect the door arm rod to the trolley ensuring the hook end goes through both holes on the front end of the outer trolley.

Step 8: Connecting the Door Arm to the Door

Type 1: Door Mounted Bracket

Visually align the door arm connecting hole with the middle hole of the door bracket by rotating the tube section in the appropriate direction.

Release the trolley (leave door arm attached) with the manual release cord and pull trolley and attached door arm toward the power head unit. Now rotate the door arm tube section two turns counterclockwise (increasing the exposed length of the door rod) to provide a cushion when the door is closed or encounters an obstruction. Align connecting hole in the door arm to middle hole in the door bracket; insert 3/8" diameter bolt and tighten locking nut, allowing for free pivot of the arm. ***Note: Do not overtighten locking nut as this will cause binding between the door arm and door bracket.***

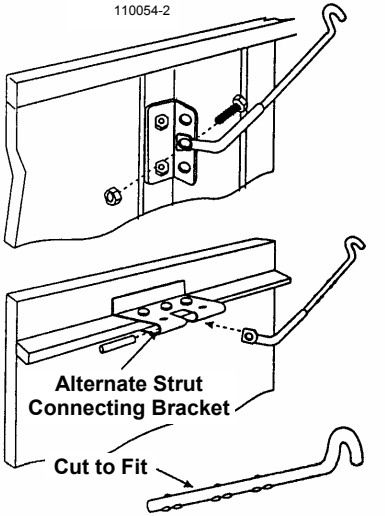

Type 2: Strut Mounted Bracket

Visually align the door arm connecting hole with the connecting pin of the strut by rotating the tube section in the appropriate direction.

Release the trolley (leave door arm attached) with the manual release cord and pull trolley toward the power head unit. Now rotate the door arm tube section two turns counter-clockwise (increasing the exposed length of the door rod) to provide a cushion when the door is closed or encounters an obstruction. Align connecting hole in the door arm with the strut mounted connecting bracket. Insert connecting pin through the hole in the door arm. Secure the connecting pin to the strut bracket according to the manufacturer's instructions.

Note: Door Bracket Mount or Strut Mount - If rod bottoms in cushion tube, cut rod to allow for proper function of this assembly.

Set the outer trolley to re-engage, see page 19.

Operate the door to the full open position and return to the fully closed position. The position of the door arm should be such that it's connecting point on the trolley is 5" to 8" behind it's connecting point on the door bracket. The door arm should never be perfectly vertical when the door in in the closed position.

Remote Control Radio System

As your transmitter is pre-coded at the factory with three of over 19,000 unique codes. As such, it is possible to control a single operator or a group of operators at one location or at multiple locations. The transmitter may be mounted on a visor using the metal visor clip (included) or attached to a key-chain with the built-in attachment. Your Remote Control Radio System transmitter is compatible with the HomeLink® systems.

Resetting the Transmitter Code

Each button of the transmitter is pre-coded at the factory to one of over 19,000 unique codes. Follow the instructions below to set your own code or to code multiple buttons or transmitters to the same code. You can record your code(s) on the back page of the manual. If recoding is not desired, skip to "Programming the Radio Receiver in the Power Head Unit" on the next page.

The transmitter codes are set using the three operation buttons (+, O, and -) on the front of the transmitter. There are three steps to set the code: **1**- The transmitter is placed in program mode; **2**- the desired button is selected; and **3**- the code is entered. Any one of the buttons or all three buttons may be coded by the sequence outlined below. Also see Express Coding under "Special Notes" at the end of this section.

STEP 1: First, **press and hold the "+" button**. The RED LED will turn on. Next, while continuing to hole the "+" button, **press and hold the "-" button**. Continue to hold both the "+" and "-" buttons until the LED starts to blink (approximately 5 seconds). When the **LED starts to blink IMMEDIATELY release both** the "+" and "-" buttons. The **LED** will **blink two times** and then remain on to confirm programming mode.

STEP 2: **While the LED is on, press and release the button** you wish **to code**. The LED will blink once and then remain on.

STEP 3: **Using the operation buttons on the front of the transmitter, enter a 9-digit random code**. Every time a button is pressed the LED will turn off and on. After the 9-digit code is entered, the **LED will blink twice to confirm** a valid code and remain off.

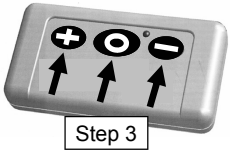

SPECIAL NOTE - EXPRESS CODING

- Allows you to code all three buttons with a single coding process, follow Steps 1, 2, & 3 (previous) except:
- Select the "+" button in Step 2
- End the entered code in Step 3 with the ninth (last) position as a "+" button entry

ALL THREE TRANSMITTER BUTTONS ARE NOW CODED.

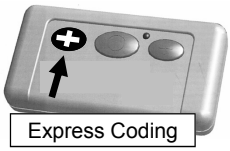

WARNING

TO PREVENT THE RISK OF PERSONAL INJURY, DAMAGE TO DOOR OR PROPERTY, ONLY OPERATE DOOR CONTROLS WHEN DOOR IS IN CLEAR VIEW. KEEP REMOTE CONTROL AWAY FROM CHILDREN IN A SECURE AREA.

FOR MULTIPLE OPERATOR INSTALLATIONS

First code all transmitters using **EXPRESS CODING** (see above for directions)
Then use a single transmitter to teach the operators the transmitter code

HomeLink®

HomeLink® is a registered trade mark of Johnson Controls, Inc.

This device complies with Part 15 of the FCC Rules and with RSS-210 of Industry Canada. Operation is subject to the following two conditions: (1) This device may not cause harmful interference, and (2) this device must accept any interference received, including interference that may cause undesired operation.

TEACHING THE OPERATOR THE TRANSMITTER CODE

Press program button on Deluxe Wall Station

Red LED and work light on the operator will turn ON (Note: The MVP radio system will learn ***8 different*** MVP transmitter codes. If LED stays on and the work light blinks press and hold Program Button for 5 seconds to clear memory and start over)

Transmit desired pushbutton - LED *AND* work light will turn off (ensure work light *AND* LED turn off - If LED remains on when you transmit a code press and hold Program Button for 5 seconds to clear memory and start over)

Opener has been programmed - next transmission will operate the door.

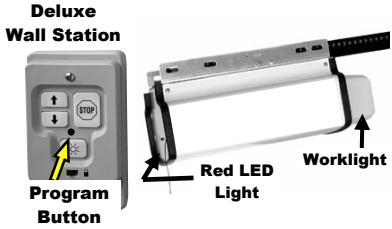

FOR MULTIPLE OPERATOR INSTALLATIONS

First code all transmitters using **EXPRESS CODING** (see above for directions)
Then use a single transmitter to teach the operators the transmitter code

WARNING

TO PREVENT THE RISK OF PERSONAL INJURY, DAMAGE TO DOOR OR PROPERTY, ONLY OPERATE DOOR CONTROLS WHEN DOOR IS IN CLEAR VIEW. KEEP REMOTE CONTROL AWAY FROM CHILDREN IN A SECURE AREA.

Recheck the antenna wire on the power head unit, for proper operation the antenna wire should be **POINTED STRAIGHT DOWN** toward the floor for most situations.

Installing the Transmitter

The transmitter is supplied with a metal clip which may be used to attach the unit to a sun visor. If the clip is used, slide it into the recess provided on the back of the transmitter case until the snaps on the case fit around the clip. If the transmitter is installed in a pocket in your car, follow all the manufacturer's instructions. Improper installation may cause intermittent transmitter operation which can result in unexpected door operations.

Battery Replacement

The MVP Quik-Code transmitter is provided with two factory installed 3-volt batteries which should be replaced after two years of normal use. The transmitter code is retained in permanent memory and will not be lost during battery replacement. To replace the batteries, remove the back of the case using a quarter or your thumb. Carefully slip the batteries out of the holders and replace with fresh CR2032 3-volt batteries. The "+" on the batteries must point away from the circuit board. Replace the back of the cover and resume normal use.

Radio Operational Check -

After programming your transmitter and the MVP receiver power head unit, check the operation of your radio controls by moving approximately 45 feet back from the garage door, then press the appropriate transmitter button that has been programmed for that door. The red LED light will illuminate on the front face of the transmitter. This is your indication that a signal has been generated and sent out by the transmitter (provided a valid programming sequence has been done with the transmitter). Operation at this distance should be reliable. However, environmental conditions and the location of the transmitter and receiver antenna will affect distance.

- If the opener doesn't activate check if the power head unit has been programmed to accept the transmitter signal. The red LED on the rear panel of the power head unit will blink two times rapidly if it has accepted a valid transmitter signal. If the LED light does not blink reprogram the MVP power head unit to accept the transmitter signal by following the instructions on the bottom of the previous page "Programming the MVP Receiver Power Head Unit" making sure you erase any previously learned signal (see above).
- If the distance is inadequate check the battery and replace if necessary and/or check the position of the power head unit antenna (see above).
- To maximize the operating distance move the transmitter to different locations in the car until a satisfactory distance is achieved. Vanity mirrors on sun visors will affect performance.

STEP 1: Testing the Limit Settings: To check the Limit Settings, start the Opener by pushing the standard wall Push Button or Super Station. Be prepared to activate the button again quickly - per the Operating Parameters outlined on page 12 - or if you see that the door is going to over travel. As illustrated below, move the Cams toward the Power Unit to **DECREASE** door travel and toward the Front Idler to **INCREASE** door travel. Adjust the Up Limit Cam so that the door comes to rest where it normally would without an electric Opener. Adjust the Down Limit Cam so that the door closes firmly without putting undue stress on the Door Arm. At full closed position, the door arm assembly should compress approximately one inch.

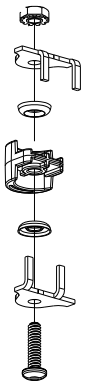

WARNING

IF LIMITS ARE NOT ADJUSTED PROPERLY, THE EMERGENCY RELEASE MECHANISM MAY NOT WORK PROPERLY AND DOOR OPERATION COULD RESULT IN DOOR DAMAGE, SERIOUS PERSONAL INJURY OR DEATH!

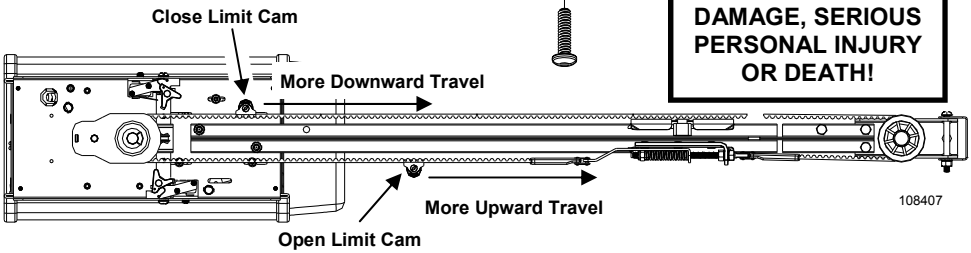

STEP 2: Adjusting the Sensitivity Force — Sensitivity System force adjustment screws are located on the side rails of the Power Unit and can easily be adjusted with a screwdriver. Turn the screws **CLOCKWISE** for more force and **COUNTERCLOCKWISE** for less force.

STEP 3: Testing the Sensitivity Force — To test the Sensitivity System, start the Opener and grasp the bottom door handle halfway through the door's travel (opening or closing).

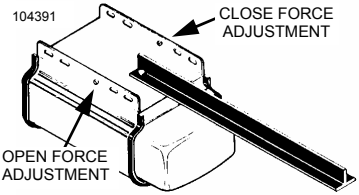

As an alternate, use a stiff cardboard carton placed in the door's downward path to indicate the force the Opener is exerting.

If the force adjustment screws are properly set, the door should stop if opening, and reverse if closing without exerting undue pressure.

WARNING

IMPROPER ADJUSTMENT OF SENSITIVITY SYSTEM FORCE COULD CAUSE ENTRAPMENT, INJURY OR DEATH. SET ADJUSTMENTS FOR JUST ENOUGH FORCE TO OPERATE THE DOOR RELIABLY, BUT NO STRONGER. Contact a service professional to correct any binding, sticking or other door problems. DO NOT OVER-ADJUST SENSITIVITY SYSTEM TO COMPENSATE FOR A POORLY WORKING DOOR.

STEP 4: Testing the Opener's Reversing System — To test the Opener's Reversing Feature at floor level, place a solid object 1-1/2" thick (such as a standard 2 X 4 board laid flat) on the ground where the center of the door will contact it. Close the door. If the down force

WARNING

THE SENSITIVITY SYSTEM REVERSING TEST SHOULD BE PERFORMED MONTHLY TO ENSURE THAT THIS IMPORTANT SYSTEM REMAINS IN PROPER ADJUSTMENT.

adjustments are correct, the door will reverse within two seconds of contacting the object and travel to the Full Open position. If this does not occur, recheck the Limit Adjustments (Step 1, previous) and Sensitivity Adjustments (see Steps 2 & 3, previous).

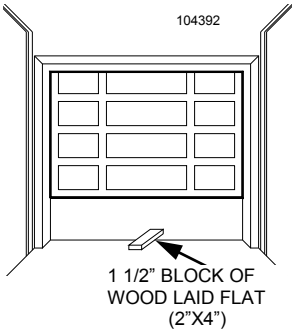

NOTE: Any time adjustments are made to Limits or Sensitivity, YOU MUST RETEST THE OPENER FOR THE REVERSING FEATURE AT FLOOR LEVEL AS OUTLINED ABOVE.

WARNING

FAILURE TO TEST REVERSING SYSTEM COULD RESULT IN DEATH OR SERIOUS INJURY. TEST THIS SYSTEM ONCE A MONTH BY FOLLOWING PROCEDURES OUTLINED IN STEP 4

WARNING

A DAMAGED OR MALFUNCTIONING PHOTOELECTRIC ACCESSORY SYSTEM COULD ENABLE A GARAGE DOOR TO CLOSE ON PEOPLE OR PROPERTY, CAUSING SERIOUS INJURY OR DEATH. PERFORM THIS TEST MONTHLY TO INSURE YOUR *SAFE FINISH*™ PHOTOSYSTEM IS WORKING PROPERLY.

STEP 5: Testing the Safe Finish™ Photosystem — Start the door in the close travel direction and then place an obstacle approximately 6" high by 12" wide in the path of the beam. The Red Pilot Light on the Safe Finish™ Photosystem should go out. The door should stop and reverse to the full open position.

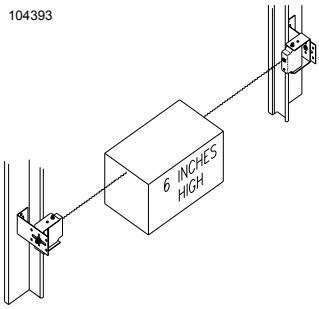

With the door fully open and at rest, place the obstacle in the path of the beam once again. Activate the Standard Wall Push Button. The opener should revert to and remain in the PUSH AND HOLD mode of operation for close travel. A radio control will not start the door downward with the beam blocked.

IF THE GARAGE DOOR TRAVELS MORE THAN ONE INCH IN A DOWNWARD PATH AFTER RELEASING THE BUTTON (WITH THE PHOTOBEAM BLOCKED), THE SAFE FINISH™ SYSTEM IS MALFUNCTIONING. CHECK THE ELECTRICAL CONNECTIONS AND ALIGNMENT OF THE PHOTOCELL MODULES.

STEP 6: Operating the Super Station (Deluxe Wall Pushbutton Station) Controls — The Super Station replaces standard a doorbell-type push button to allow you to integrate fully with all the convenience and security features built into your MVP Series garage door operator.

1. **Open Pushbutton —** Green-backlighting, arrow pointing up. Used to start the door upward. This button will also stop and reverse a door that is closing. The button has no effect on a door that is opening. The function of this pushbutton is automatically disabled when the Security slide switch is set to the "ON" position and the door is fully closed.

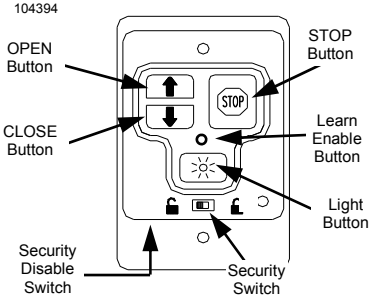

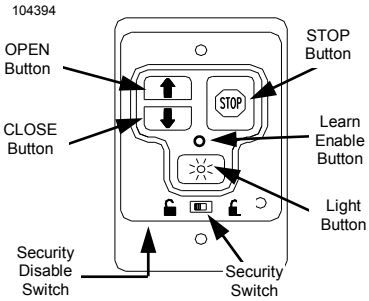

2. **Close Push button —** Green-backlighting, arrow pointing down. Used to start the door downward. This button has no effect on a door in motion. Will allow constant pressure close operation if the photocell is misaligned.

3. **Stop Button** - Red-backlighting, universal "STOP" within an octogon. Used to stop a door in motion. This button has no effect on a door that is stopped.

4. **Light Pushbutton —**Yellow-backlighting, "Sun" symbol. Turns the opener light on and off, but does not activate the door operator. The opener light will stay on until turned off using this pushbutton, or until door operation is initiated, which overrides the function of this pushbutton and automatically turns the light off after 4-1/2 minutes.

5. **Security Switch —** Prevents unwanted door operation from pushbutton, key switches, keyless entry systems, radio controls, etc. When the Security Switch is moved to the ON position (towards "locked" symbol), with the garage door fully closed, signals from all of these devices are locked out by the operator. Such devices will continue to work until the door is fully closed, allowing you to set the switch (when leaving on vacation, for example), leave the garage and close the door remotely.

(NOTE: YOU WILL NOT BE ABLE TO OPEN YOUR GARAGE DOOR USING RADIO CONTROLS OR EXTERIOR ACCESS CONTROLS UNTIL THE SECURITY SWITCH IS RETURNED TO THE OFF POSITION ("unlocked" symbol). THIS MUST BE DONE FROM INSIDE THE GARAGE.) When the Security Switch is engaged, the green lighting behind the Open/Close Pushbuttons is extinguished as an indication.

6. **Security Disable Switch** - located under and to the left of the Security Switch. Disables the Security Switch feature. Use if the garage door is the only entryway to the garage.

7. **Learn Enable Button** - Located inside a small hole on the front face of the Security Switch. Allows programming of a radio transmitter. See "Programming the Radio System" on page 14 for button features and restrictions. Use a pin or pointed object to activate.

Wiring Diagram

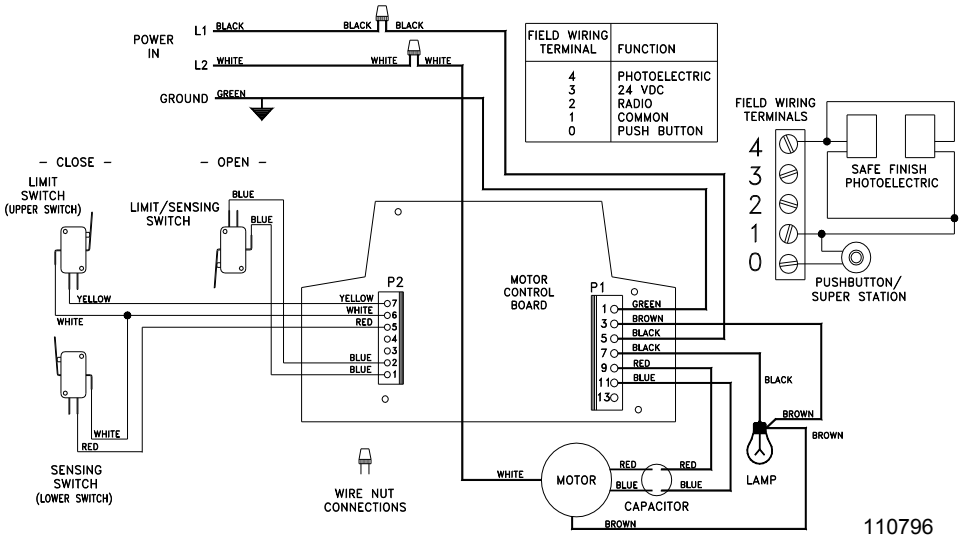

MANUAL RELEASE OPERATION

WARNING

KEEP PEOPLE AND OBJECTS OUT OF DOOR OPENING WHEN USING MANUAL DISCONNECT. AN OPEN OR PARTIALLY OPEN DOOR MAY FALL UNCONTROLLABLY IF DISCONNECTED FROM OPERATOR. CONTACT A SERVICE PROFESSIONAL TO CORRECT ANY DOOR PROBLEMS.

NOTE: The MANUAL RELEASE MECHANISM is engaged by pulling the Release Handle down and away from the door. This allows the Trolley Mechanism to separate, freeing the door from the Opener's transport mechanism.

To re-engage, simply move the MANUAL RELEASE MECHANISM Lever forward (pull towards door) and then operate normally using the Push Button or Radio Control. The two parts of the Trolley Mechanism will automatically reconnect.

TO RELEASE:

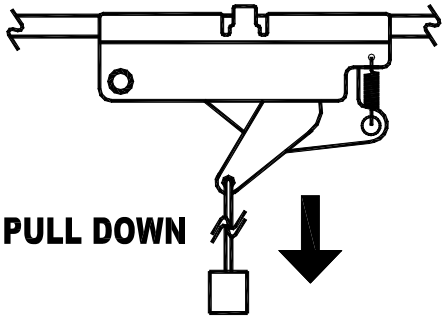

TO RE-ENGAGE:

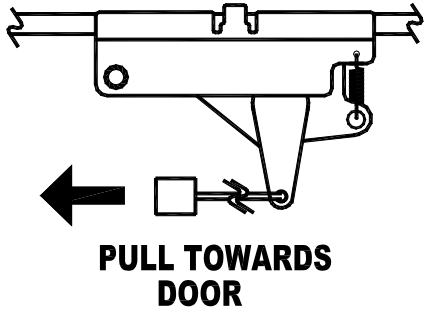

TROUBLESHOOTING GUIDE

WARNING

USE EXTREME CAUTION AT ALL TIMES WHEN ATTEMPTING TO DIAGNOSE AND RECTIFY PROBLEMS WITH YOUR GARAGE DOOR OPENER. BEFORE ATTEMPTING ANY SERVICE ON UNIT, DISCONNECT OPENER FROM POWER SUPPLY. YOUR GARAGE DOOR IS THE LARGEST MOVING OBJECT IN YOUR HOUSE, AND THE SPRINGS, PULLEYS, CABLES AND MOUNTING HARDWARE UTILIZED TO BALANCE ITS OPERATION ARE UNDER EXTREME TENSION AT ALL TIMES AND CAN CAUSE SERIOUS PERSONAL INJURY, EVEN DEATH, IF DISTURBED. CALL AN EXPERIENCED SERVICE PERSON TO MOVE, LOOSEN OR ADJUST DOOR SPRINGS OR HARDWARE.

With the appropriate cautions in place, use the fast find LED diagnostic chart (at right) or the Symptom/ Probable Cause/Solution matrix to diagnose the problem. The LEDs are located on the power head unit rear panel. Contact the factory if your problem persists or is not listed.

DIAGNOSTIC CONDITION	RED LED	GREEN LED
Normal Operation	OFF	OFF
Learn Mode	ON	OFF
Memory Full	ON FOR 25 SEC, AUTO OFF	OFF
Decode RF Signal	SHORT FAST BLINK	OFF
Shorted Push Button or Wire to Button	OFF	ON
Photobeam Obstruction	OFF	FAST BLINK
Contact Reverse	FAST BLINK	OFF
Stuck Relay	SLOW BLINK	OFF
Stuck Open Limit	OFF	SLOW BLINK

Manufacturer's Limited Warranty

Linear LLC warrants its Allstar brand MVP Series residential vehicular garage door operators as follows:

- The drive train to be free from defects in materials and workmanship for Model MVP-SB (SuperBelt) for the entire period of ownership by the original purchaser.

  The drive train includes the motor, drive pulleys, drive shaft and sprocket, T-rail, frame and belt.

- The controller circuit board, capacitor, photobeams and all other parts in all models will be free from defects in materials and workmanship for a period of two (2) years from the date of purchase by the original purchaser.

Contact your dealer to obtain service for your operator .

To obtain service under this warranty the buyer must obtain authorization instructions for the return of any goods from Linear before returning the goods. The goods must be returned with complete identification, with copy of proof-of-purchase, freight prepaid and in accordance with Linear's instructions or they will not be accepted. In no event will Linear be responsible for goods returned without proper authorization or identification.

Goods returned to Linear for warranty repair within the warranty period, which upon receipt by Linear are confirmed to be defective and covered by this limited warranty, will be repaired or replaced at Linear's sole option, at no cost and returned pre-paid. Defective parts will be repaired or replaced with new or factory rebuilt parts at Linear's sole option.

This limited warranty does not cover non-defect damage, damage caused by unreasonable use, damage caused by improper installation or care, vandalism or lightning, fire or excessive heat, flood or other acts of God (including, but not limited to misuse, abuse or alterations, failure to provide reasonable and necessary maintenance), labor charges for dismantling or reinstalling a repaired or replaced unit, or replacement batteries.

These warranties are in lieu of all other warranties, either expressed or implied. All implied warranties of merchantability and/or fitness for a particular purpose are hereby disclaimed and excluded. Under no circumstances shall Linear be liable for consequential, incidental or special damages arising in connection with the use or inability to use this product. In no event shall Linear's liability for breach of warranty, breach of contract, negligence or strict liability exceed the cost of the product covered hereby. No person is authorized to assume for Linear any other liability in connection with the sale of this product.

This warranty gives you specific legal rights. You may also have other rights which vary from state to state.
Warranty effective after October 1st, 2007.

For Information:
877-441-9300 800-421-1587 www.allstarcorp.com

Serial #:
Date Installed:
Your Dealer:

This garage door operator complies with all requirements of ANSI/UL Standard 325.

P/N 190-112319 Rev. EX1 August 2007

Your Radio System can learn *8 different* transmitter codes.
See Page 14 and, if desired, record your code settings here.

Code Position ⇨	1	2	3	4	5	6	7	8	9
Plus (+) Button									
Zero (0) Button									
Minus (-) Button									

See Page 14 for Radio System programming instructions and FCC/ RSS-210 Industry Canada statement. The opener radio system is HomeLink® compatible.

Copyright © 2007 Linear LLC