CONGRATULATIONS!

Your purchase of an M&S SYSTEMS music and communications system is an investment that will provide years of enjoyment and service for your customer.

M&S audio products are backed with more than 40 years of experience in the design and manufacture of precision acoustical equipment for the home. To ensure that your customer receives the high-quality music and voice reproduction that the system is designed to deliver, it is important that each step of the installation be done carefully. If you follow the step-by-step illustrated instructions below, the result will be a successful professional-quality installation. In the event you need troubleshooting assistance, please call our technical staff at 1-800-366-9422.

INSTALLATION INSTRUCTIONS ROUGH-IN MC111M/DM SYSTEM

The rough-in installation should be made during new construction prior to the application of wall covering material. However, retrofit instructions are included where applicable.

Tools required: Power drill with 1" auger, #2 Phillips screwdriver, wire stripper/cutter, tape measure and level.

DOs & DONT's

- **USE ONLY M&S SYSTEMS BRAND CABLE** as called out in these instructions. The cable is designed and constructed with electrical specifications necessary for proper audio performance. **Important: The use of non M&S SYSTEMS brand cable will void the product warranty!** *Note: All M&S SYSTEMS cable has M&S SYSTEMS and the part number printed on it!*
- **USE** or **MS4XSC** cable for room stations, remote controls and volume controls.
- **DO NOT EXCEED 200 FEET** of cable for any one run or 700 FEET for the entire system. The maximum number of stations including the master is 10.
- **USE** or **MS4DCXSC** for door stations. The maximum number of door stations is two.
- **RUN A SINGLE CABLE** from the master unit location to each room station or control (Home Run). **DO NOT LOOP CABLE** from one station to another. Looping will cause electronic feedback.
- **DO NOT STAPLE CABLES!** Staples cause shorts.
- **DO NOT SPLICE CABLES.** Splices are unreliable and defeat the signal isolation properties of the cable
- **KEEP CABLES AT LEAST 18 INCHES FROM FLUORESCENT LIGHT FIXTURES, DIMMER CONTROLS, AND ALL OTHER WIRING.** This includes AC wiring, security cable, and other control wires. These can cause a "hum" or "buzzing" sound in the intercom.
- Keep cables away from objects such as heating and air conditioning ducts, metal construction plates, and anything else with sharp edges that can damage the cables.
- Outside cable runs should be underground through PVC conduit (one cable per conduit unless shielded cable MS4XSC or MS4DCXSC is used). This cable is not weatherproof, therefore, it must be protected. PVC must be sealed on each end to prevent condensation in the pipe.
- If extra cables are run for possible future speaker additions, care must be taken that these cables do not get connected to the master unit. Unterminated cables (no station) connected to the master unit will cause electronic feedback that will damage the master unit.

MASTER UNIT

DOs & DONT's

Careful consideration should be used when determining wall housing location. **DO NOT** install wall housing in the following locations:

- **DO NOT** Install wall housing in return air ducts.
- **DO NOT** install wall housing in exterior walls
- **DO NOT** Install wall housing underneath cabinets or over counter tops.
- **DO NOT** install wall housing in stud cavities with other 120/240 appliances.
- **DO NOT** install wall housing within 18" of dimmers, fluorescent light fixtures, security wiring and other control wiring.
- **DO NOT** install wall housing within 2" of room corners.
- **DO** make sure all mounting rings are level and oriented as shown in these instructions.

Locate an NMR5 mounting ring for the master unit. Position the mounting ring approximately 52" high. Have a qualified electrician run a dedicated 120VAC/60Hz receptacle with ground connection from the power panel to a remote junction box in which to mount the RT35 power transformer. Install and connect the remote power transformer as shown in Figure 1 and Figure 2. Use Figure 1 and Figure 3 for plug-in version using RT11.

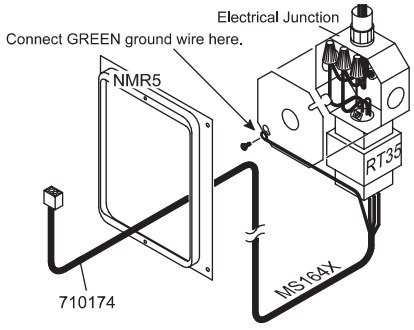

Figure 2 - RT35 Power transformer hookup

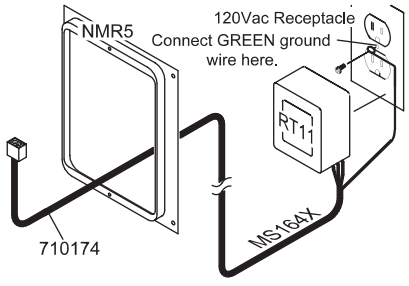

Figure 3 - RT11 Power transformer hookup

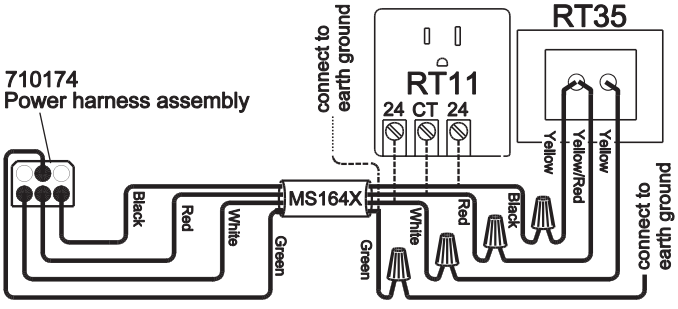

Figure 1 - Power transformer wiring diagram

SPEAKERS N14, N35, N15D

At each room station location, nail or screw the NMR5 mounting ring (for N14, N35, N15D or NWRC14) to a vertical wall stud approximately 52" above the floor. RETROFIT: locate mounting rings at least 1" from studs.

From the master unit location, run MS4XSC cable to each remote station location. Secure approximately 12" of wire at the speaker location to protect wire from dry wall damage. Secure cables at the master.

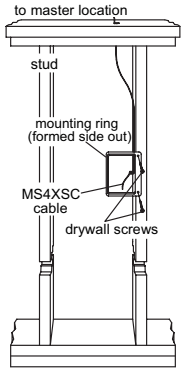

Figure 4 - Remote station Rough-in

PATIO SPEAKERS NW14/NW35

Run a single cable MS4XSC from the master unit location to each outdoor speaker location and secure the cable to the correct plastic or metal enclosure by wrapping the cable around a small piece of wood. Use NME5 enclosure for recessed NW14 or NW35 patio stations.

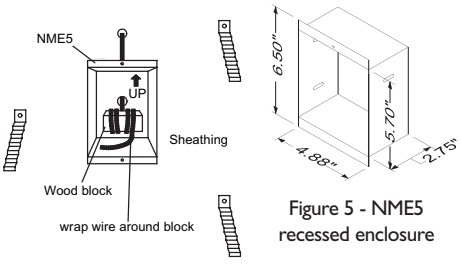

Figure 5 - NME5 recessed enclosure

Figure 6 - Recessed patio speaker mounting

SATELLITE SPEAKERS USING MVC1 VOLUME CONTROL

At each room station location, nail a single gang box for the MVC1 volume control to a vertical stud approximately 52" above the floor. RETROFIT: use a single gang box designed for existing construction.

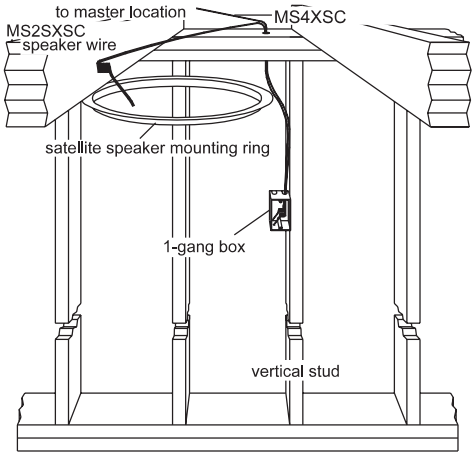

Figure 7 - Remote station with satellite speaker

Generally, existing type single gang boxes will mount between vertical studs at least 1" from studs. From the master unit wall housing, run MS4XSC cable to each remote station location. Secure approximately 12" of wire at the speaker location to protect wire from dry wall damage. Secure cables at the master. *Note: No more than 2 satellite speakers can be connected to the MVC1.*

Remote Controls using NWRC14

At each room station location, nail an NMR5 mounting ring to a vertical stud approximately 52" above the floor. From the master unit wall housing, run MS4XSC cable to each remote station location. Secure approximately 12" of wire at the speaker location to protect from dry wall damage. Secure cables at the master. *Note: No more than 2 satellite speakers can be connected to the NWRC14.*

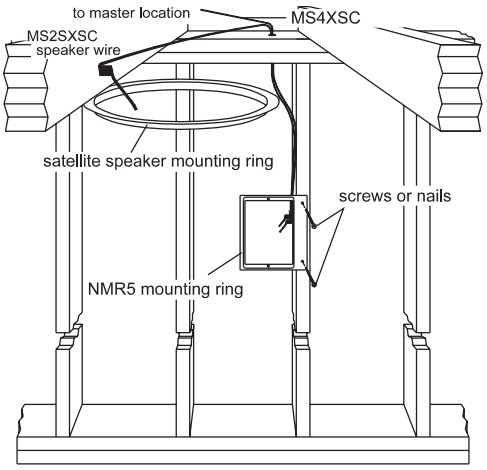

Figure 8 - Remote Intercom station with satellite speaker

Door Stations NS3/NS3B & BD3/D3/BD3B/D3B

Run MS4DCXSC or from the master unit location to each door station. Allow 18 inches of excess cable on each end. On the door speaker end, suspend the ME3 metal enclosure on the cable about 50 inches above the floor (porch) so the brick mason can flush and level it in the brick wall. If wood or aluminum siding is used, secure surface mount housing SMP3 (for NS3B series) or SME3D (for BD3B/D3B series) to the finished wall using galvanized screws. Secure cables at master.

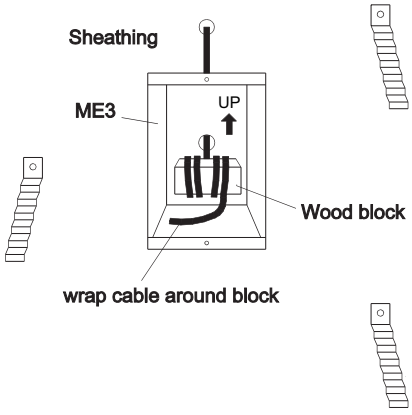

Figure 9 - Recessed door station rough-in

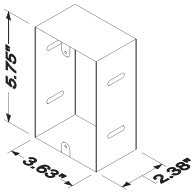

Figure 10 - ME3 enclosure for all door stations

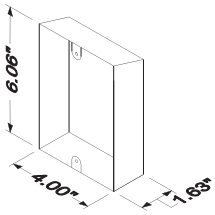

Figure 11 - SME3D surface mount enclosure

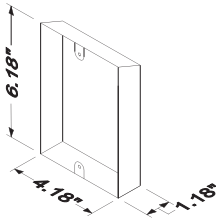

Figure 12 - SMP3 surface mount enclosure

External Music Source AWPM

External Music Sources (AWPM): Choose a location for the AWPM that will be easily accessible to the sources that are to be connected to the system (close to the stereo receiver, TV or VCR for example). At this location, attach a single gang box to a wall stud at a center height of normal wall outlets. Make sure the single gang box extends past the wall stud and into the room so it will be flush with the sheetrock when it is applied. Run the Red or Black shielded audio cable (included in the AWPMRX) from the master unit location to the AWPM location. *Note: Only one cable is required for use with the MC111M/DM.* Secure the audio cable with a loose knot after it has been pulled through the single gang box. Secure the cable at the master.

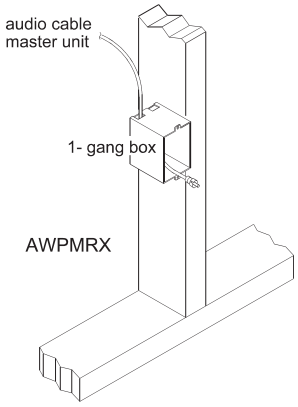

Figure 13 - AWPMRX installation

Door Release Options

The door release option is a momentary normally open dry contact closure provided by the master and door release equipped remote stations and remote controls. This dry contact is rated 24V at 1 Amps. The sample applications below represent some uses. However, only one application can be used in any MC111DM system at a time.

Door or Gate release mechanism: Run a single line of VM127X from the master unit location to the door release mechanism and to each N15D/N35D remote station. *Do not bundle the VM127X wires with the intercom wires!* Connect the Red and White wires to the two wires or terminals of the door release mechanism. Run another single line of VM127X from the master unit location to a gang box next to a 120VAC

receptacle where the RT11 remote power transformer will be plugged in. Label and secure cables at master. The door release switch contacts are very versatile and can be used with many AC/DC door or switch contacts. Be sure to use the wire and power supply or transformer specified by the door or gate release being used.

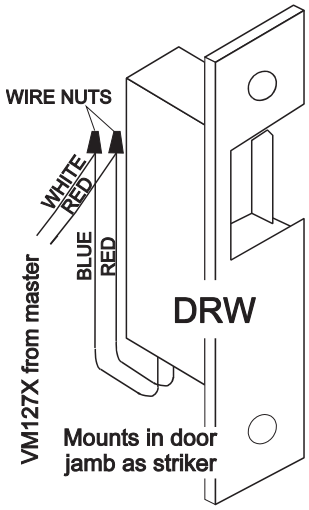

Figure 14 - DRW door release strike

HomeMation - Home automation interface (lights on, flash etc.) Run a line of VM127X from the master unit location to a gang box next to a 120VAC receptacle where a PF284 Power Flash module will be installed later. Also, run a VM127X wire from the master location to each N15D/N35D remote station. *Do not bundle the VM127X wires with the intercom wires!* Secure cable at master. Refer to the HomeMation application guide for specific feature implementation information.

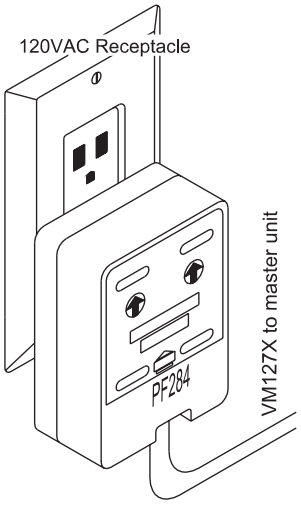

Figure 15 - Home automation hookup

M&S SYSTEMS™

M&S SYSTEMS 2-Year "No Fault" LIMITED WARRANTY

M&S Systems warrants for two years (2) all products to be free of factory-caused defects in material and workmanship. M&S Systems will repair or replace, at its option, parts and materials at no charge, regardless of the problem. This warranty extends to the original purchaser of the product and to each subsequent owner of the product during the term of this warranty. This NO FAULT warranty covers only the liability described above, and does not include liability for incidental or consequential damages. NOTE: Some states do not allow the exclusion or limitation of incidental or consequential damages, so the above limitation or exclusion may not apply to you.