LiftMaster®
Gate Access Systems

LA412 & LA412-S

12 VOLT DC
SOLAR RESIDENTIAL SWING
GATE OPERATOR

OWNER'S MANUAL

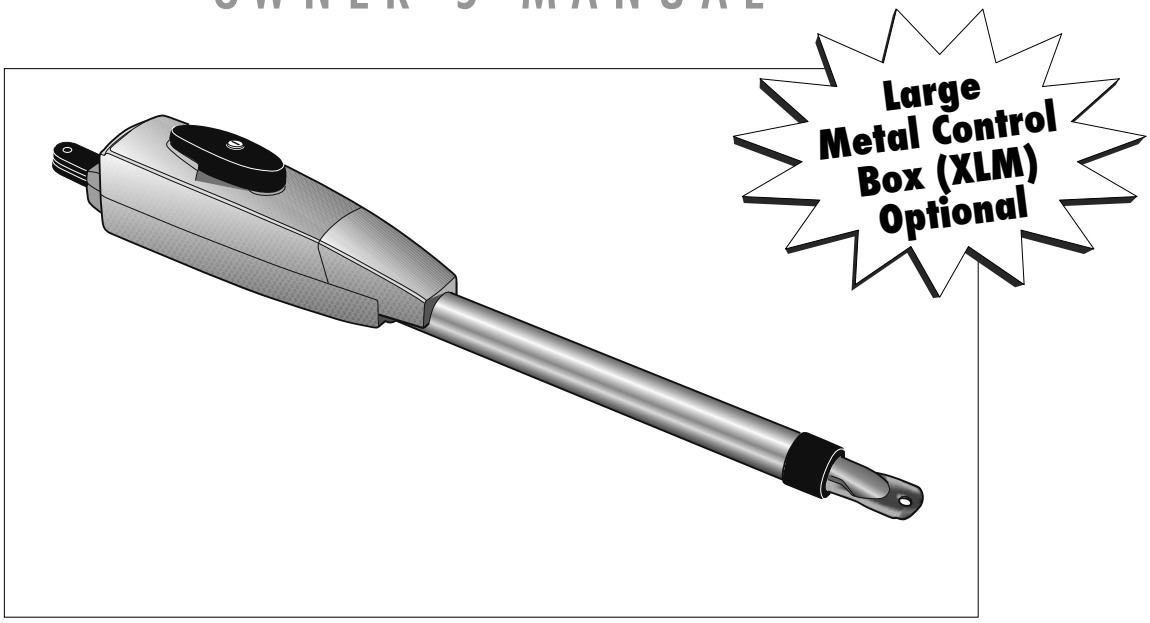

FOR RESIDENTIAL USE ONLY

- Please read this manual and the enclosed safety materials carefully!
- Periodic checks of the operator by a qualified technician are required to ensure safe operation.
- The model number is located inside the control box of your operator.
- Serial # _____
- Installation date _____

2 YEAR WARRANTY

c UL US

TABLE OF CONTENTS

SAFETY 1-5

Safety Symbol and Signal Word Review 1
Safety Installation Information 2
Gate Construction Information 3
Important Safety Information 4-5

INTRODUCTION 6-7

Operator Specifications 6
Carton Inventory 6
Hardware Inventory 7
Additional Items for Purchase 7
Tools Needed 7

INSTALLATION 8-19

Overview of Typical Installation 8-9
Check Your Gate 10
Mounting Options 10
Manual Release 11
Determine the Position of the Pull-to-Open Bracket 11
Determine the Position of the "Optional" Push-to-Open Bracket 11
Assemble Gate Post Bracket (Pull-to-Open) 12
Attach Brackets to Gate Operator 12
Determine Mounting Location 13
Measuring and Marking for the Gate Bracket 13
Position Gate Operator on Gate 14
Test Gate Travel 15
Secure Post Bracket to Gate Post 15
Secure Gate Bracket to Gate 16
Warning Sign Placement 16
Standard Control Box 17-18
Large Metal Control Box (XLM) 19

WIRING 20-24

Connect the Gate Operator (Gate 1) to the Control Box 20
Set the Lock/Bipart Delay (Model LA412-S Only) 21
Connect the Gate Operator (Gate 2) to the Control Box (Model LA412-S Only) 22
Junction Box (Model LA412-S Only) 23-24

SOLAR PANEL INSTALLATION 25-28

ADJUSTMENT 29-32

Limits 29-31
Force Adjustment 32
Timer-to-Close 32

PROGRAMMING 33

Remote Controls 33
Keyless Entry 33
Erase All Codes 33
Test 33

OPERATION AND MAINTENANCE 34-35

Reset Button 34
Remote Control 34
Sleep Mode 34
Manual Release 35
Maintenance 35

TROUBLESHOOTING 36-39

Wiring Diagram 36
Diagnostic Chart 37
Troubleshooting Chart 38-39

REPAIR PARTS 40-41

Control Box 40
Gate Operator Arm 40
How to Order Repair Parts 41

WARRANTY POLICY 41

ACCESSORIES 42

TEMPLATE BACK COVER

SAFETY » SAFETY SYMBOL AND SIGNAL WORD REVIEW

When you see these Safety Symbols and Signal Words on the following pages, they will alert you to the possibility of ***Serious Injury or Death*** if you do not comply with the warnings that accompany them. The hazard may come from something mechanical or from electric shock. Read the warnings carefully.

When you see this Signal Word on the following pages, it will alert you to the possibility of damage to your gate and/or the gate operator if you do not comply with the cautionary statements that accompany it. Read them carefully.

***IMPORTANT* NOTE**

- *BEFORE attempting to install, operate or maintain the operator, you must read and fully understand this manual and follow all safety instructions.*
- *DO NOT attempt repair or service of your gate operator unless you are an Authorized Service Technician.*

⚠ WARNING

MECHANICAL

⚠ WARNING

ELECTRICAL

CAUTION

SAFETY » SAFETY INSTALLATION INFORMATION

1. READ and FOLLOW all instructions.
2. The gate operator is intended for use with Class I vehicular swing gates.

   Class I denotes a vehicular gate operator (or system) intended for use in a home of one to four single family dwellings, or a garage or parking area associated therewith.

   Install the gate operator only when the operator is appropriate for the construction and the usage class of the gate.
3. Gate operating system designers, installers and users must take into account the possible hazards associated with each individual application. Improperly designed, installed or maintained systems can create risks for the user as well as the bystander. Gate system design and installation must reduce public exposure to potential hazards. Install the gate operator only when the operator is appropriate for the construction of the gate and the usage class of the gate. All exposed pinch points must be eliminated or guarded.
4. A gate operator can create high levels of force during normal operation. Therefore, safety features must be incorporated into every installation. Specific safety features include photoelectric sensors.
5. The gate must be properly installed and work freely in both directions prior to the installation of the gate operator.
6. The gate must be installed in a location so that enough clearance is provided between the gate and adjacent structures when opening and closing to reduce the risk of entrapment. Swinging gates shall not open into public access areas.
7. The operator is intended for use only on gates used for vehicles. Pedestrians must be supplied with a separate access opening. The pedestrian access opening shall be designed to promote pedestrian usage. The pedestrian access shall be located such that persons will not come in contact with the moving vehicular gate.
8. Pedestrians should never cross the pathway of a moving gate. The gate operator is not acceptable for use on any pedestrian gate. Pedestrians must be supplied with a separate pedestrian access.

9. For an installation utilizing non-contact sensors (photoelectric sensors), see product manual on the placement of non-contact sensors (photoelectric sensors) for each type of application.
   a. Care shall be exercised to reduce the risk of nuisance tripping, such as when a vehicle trips the photoelectric sensor while the gate is still moving.
   b. One or more non-contact sensors (photoelectric sensors) shall be located where the risk of entrapment or obstruction exists, such as the perimeter reachable by a moving gate or barrier.
10. For a gate operator utilizing a contact sensor such as an edge sensor:
    a. A hard wired contact sensor shall be located and its wiring arranged so the communication between the sensor and the gate operator is not subject to mechanical damage.
    b. One or more contact sensors shall be located on the inside and outside leading edge of a swing gate. Additionally, if the bottom edge of a swing gate is greater than 6 inches (152 mm) above the ground at any point in its arc of travel, one or more contact sensors shall be located on the bottom edge.
11. Never mount any device that operates the gate operator where the user can reach over, under, around or through the gate to operate the controls. Controls are to be placed at least 6 feet (1.8 m) from any part of the moving gate:
    - A hard wired control device shall be located and its wiring arranged so that communication between the control device and the gate operator is not subject to mechanical damage.

12. Controls intended to be used to reset an operator after 2 sequential activations of the entrapment protection device or devices must be located in the line of sight of the gate, or easily accessible controls shall have a security feature to prevent unauthorized use. Never allow anyone to hang on or ride the gate during the entire travel of the gate.

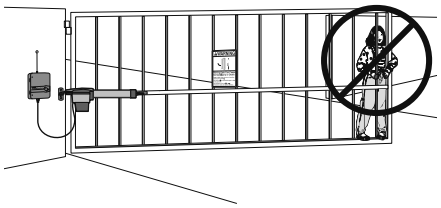

13. Each gate operator is provided with two safety warning placards. The placards are to be installed on the front and back of the gate where they are plainly visible. The placards may be mounted using cable ties through the four holes provided on each placard. All warning signs and placards must be installed where visible in the area of the gate.

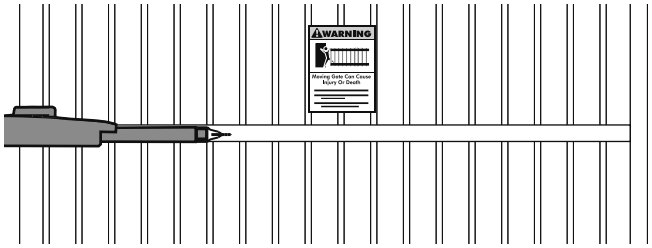

14. To AVOID damaging gas, power, or other underground utility lines, contact underground utility locating companies BEFORE digging.
15. SAVE THE INSTRUCTIONS.

SAFETY » GATE CONSTRUCTION INFORMATION

Vehicular gates should be installed in accordance with ASTM F2200: Standard Specification for Automated Vehicular Gate Construction. For a copy, contact ASTM directly at 610-832-9585 or www.astm.org.

1. GENERAL REQUIREMENTS

1.1 Gates shall be constructed in accordance with the provisions given for the appropriate gate type listed, refer to ASTM F2200 for additional gate types.

1.2 Gates shall be designed, constructed and installed to not fall over more than 45 degrees from the vertical plane, when a gate is detached from the supporting hardware.

1.3 Gates shall have smooth bottom edges, with vertical bottom edged protrusions not exceeding 0.50 inches (12.7 mm) when other than the exceptions listed in ASTM F2200.

1.4 The minimum height for barbed tape shall not be less than 8 feet (2.44 m) above grade and for barbed wire shall not be less than 6 feet (1.83 m) above grade.

1.5 An existing gate latch shall be disabled when a manually operated gate is retrofitted with a powered gate operator.

1.6 A gate latch shall not be installed on an automatically operated gate.

1.7 Protrusions shall not be permitted on any gate, refer to ASTM F2200 for Exceptions.

1.8 Gates shall be designed, constructed and installed such that their movement shall not be initiated by gravity when an automatic operator is disconnected.

1.9 A pedestrian gate shall not be incorporated into a vehicular gate panel or that portion of the adjacent fence that the gate covers in the open position.

2. SPECIFIC APPLICATIONS

2.1 Any non-automated gate that is to be automated shall be upgraded to conform to the provisions of this specification.

2.2 This specification shall not apply to gates generally used for pedestrian access and to vehicular gates not to be automated.

2.3 Any existing automated gate, when the operator requires replacement, shall be upgraded to conform to the provisions of this specification in effect at that time.

3. VEHICULAR HORIZONTAL SLIDE GATES

3.1 The following provisions shall apply to Class I, Class II and Class III vehicular horizontal slide gates:

3.1.1 All weight bearing exposed rollers 8 feet (2.44 m), or less, above grade shall be guarded or covered.

3.1.2 All openings located between 48 inches (1.22 m) and 72 inches (1.83 m) above grade shall be designed, guarded or screened to prevent a 4 inch (102 mm) diameter sphere from passing through the openings anywhere in the gate, and in that portion of the adjacent fence that covers in the open position.

3.1.3 A gap, measured in the horizontal plane parallel to the roadway, between a fixed stationary object nearest the roadway, (such as a gate support post) and the gate frame when the gate is in either the fully open position or the fully closed position, shall not exceed 2-1/4 inches (57 mm), refer to ASTM F2200 for Exception.

3.1.4 Positive stops shall be required to limit travel to the designed fully open and fully closed positions. These stops shall be installed at either the top of the gate, or at the bottom of the gate where such stops shall horizontally or vertically project no more than is required to perform their intended function.

3.1.5 All gates shall be designed with sufficient lateral stability to assure that the gate will enter a receiver guide, refer to ASTM F2200 for panel types.

3.2 The following provisions shall apply to Class IV vehicular horizontal slide gates:

3.2.1 All weight bearing exposed rollers 8 feet (2.44 m), or less, above grade shall be guarded or covered.

3.2.2 Positive stops shall be required to limit travel to the designed fully open and fully closed positions. These stops shall be installed at either the top of the gate, or at the bottom of the gate where such stops shall horizontally or vertically project no more than is required to perform their intended function.

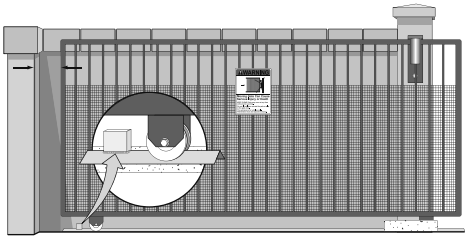

4. VEHICULAR HORIZONTAL SWING GATES

4.1 The following provisions shall apply to Class 1, Class II and Class III vehicular horizontal swing gates:

4.1.1 Gates shall be designed, constructed and installed so as not to create an entrapment area between the gate and the supporting structure or other fixed object when the gate moves toward the fully open position, subject to the provisions in the 4.1.1.1 and 4.1.1.2.

4.1.1.1 The width of an object (such as a wall, pillar or column) covered by a swing gate when in the open position shall not exceed 4 inches (102 mm), measured from the centerline of the pivot point of the gate, refer to ASTM F2200 for exception.

4.1.1.2 Except for the zone specified in Section 4.1.1.1, the distance between a fixed object such as a wall, pillar or column, and a swing gate when in the open position shall not be less than 16 inches (406 mm), refer to ASTM F2200 for exception.

4.2 Class IV vehicular horizontal swing gates shall be designed, constructed and installed in accordance with security related parameters specific to the application in question.

INSTALLATION

⚠⚠ WARNING

To prevent SERIOUS INJURY or DEATH; one or more non-contact sensors shall be located where the risk of entrapment or obstruction exists.

To prevent SERIOUS INJURY or DEATH from a moving gate:

- Install warning signs on the front and back of the gate in PLAIN VIEW.
- Permanently secure each warning sign in a suitable manner using fastening holes.

ALWAYS wear protective gloves and eye protection when changing the battery or working around the battery compartment.

- DO NOT use flooded lead acid battery.
- Flooded lead acid batteries will produce gases when discharging and recharging which can explode.
- DO NOT dispose of battery in fire. Battery may explode. Check with local codes for disposal instructions.

WIRING

⚠⚠ WARNING

To reduce the risk of SEVERE INJURY or DEATH:

- BEFORE installing power wiring or control stations be sure to follow ALL specifications and warnings described below.
- ANY maintenance to the operator or in the area near the operator MUST NOT be performed until the batteries are disconnected. Upon completion of maintenance the area MUST be cleared and secured, at that time the unit may be returned to service.
- ALL electrical connections MUST be made by a qualified individual.
- DO NOT install ANY wiring or attempt to run the operator without consulting the wiring diagram. We recommend that you install an optional reversing edge BEFORE proceeding with the control station installation.

To AVOID damaging gas, power or other underground utility lines, contact underground utility locating companies BEFORE digging.

SOLAR PANEL INSTALLATION

⚠ WARNING

To avoid SERIOUS INJURY or DEATH:

- Disconnect ALL electric and battery power BEFORE performing ANY service or maintenance.
- DO NOT connect solar panel(s) when power supply is connected.
- DO NOT connect more than 30W (3 solar panels).

CAUTION

To reduce the risk of FIRE or INJURY to persons use ONLY LiftMaster part 29-NP712 for replacement batteries.

ADJUSTMENT

⚠ WARNING

Without a properly installed safety reversal system, persons (particularly small children) could be SERIOUSLY INJURED or KILLED by a closing gate.

- Too much force on gate will interfere with proper operation of safety reversal system.
- NEVER increase force beyond minimum amount required to close gate.
- NEVER use force adjustments to compensate for a binding or sticking gate.
- If one control (force or travel limits) is adjusted, the other control may also need adjustment.
- After ANY adjustments are made, the safety reversal system MUST be tested. Gate MUST reverse on contact with a rigid object.

PROGRAMMING

⚠ WARNING

To prevent possible SERIOUS INJURY or DEATH from a moving gate or garage door:

- ALWAYS keep remote controls out of reach of children. NEVER permit children to operate, or play with remote control transmitters.
- Activate gate or door ONLY when it can be seen clearly, is properly adjusted, and there are no obstructions to door travel.
- ALWAYS keep gate or garage door in sight until completely closed. NEVER permit anyone to cross path of moving gate or door.

OPERATION AND MAINTENANCE

⚠⚠ WARNING

To reduce the risk of SEVERE INJURY or DEATH:

- READ AND FOLLOW ALL INSTRUCTIONS.
- NEVER let children operate or play with gate controls. Keep the remote control away from children.
- ALWAYS keep people and objects away from the gate. NO ONE SHOULD CROSS THE PATH OF THE MOVING GATE.
- Test the gate operator monthly. The gate MUST reverse on contact with a rigid object or stop when an object activates the non-contact sensors. After adjusting the force or the limit of travel, retest the gate operator. Failure to adjust and retest the gate operator properly can increase the risk of INJURY or DEATH.
- Use the emergency release ONLY when the gate is not moving.
- KEEP GATES PROPERLY MAINTAINED. Read the owner's manual. Have a qualified service person make repairs to gate hardware.
- The entrance is for vehicles ONLY. Pedestrians MUST use separate entrance.
- Disconnect ALL power BEFORE performing ANY maintenance.
- SAVE THESE INSTRUCTIONS.

TROUBLESHOOTING

⚠ WARNING

To protect against fire and electrocution:

- DISCONNECT power and battery BEFORE installing or servicing operator.

For continued protection against fire:

- Replace ONLY with fuse of same type and rating.

OPERATOR SPECIFICATIONS

Main Supply (Motor):	**12 Vdc Battery run**
Accessory Power:	**12 V nominal Class II battery voltage source is limited to:** • **Solar or AC Cable up to 50 feet - 500 mA** • **AC Cable 50 feet up to 250 feet - 250 mA** • **AC Cable 250 feet up to 1000 feet - 100 mA** ***NOTE:*** *Increased accessory power drawn from the operator will shorten the battery life.*
Battery Charger Supply (Optional):	**14.5 Vac, 30 VA max.**
Maximum Gate Length and Weight:	**16 feet at 550 lbs.**
Temperature:	**-20° C to 50° C (-4° F to 122° F)**
Fuse Protection Battery:	**20 Amp**
Protection Fuse Battery 2:	**ATC 20 A**
Solar Power Max:	**12 V at 30 Watts max.**

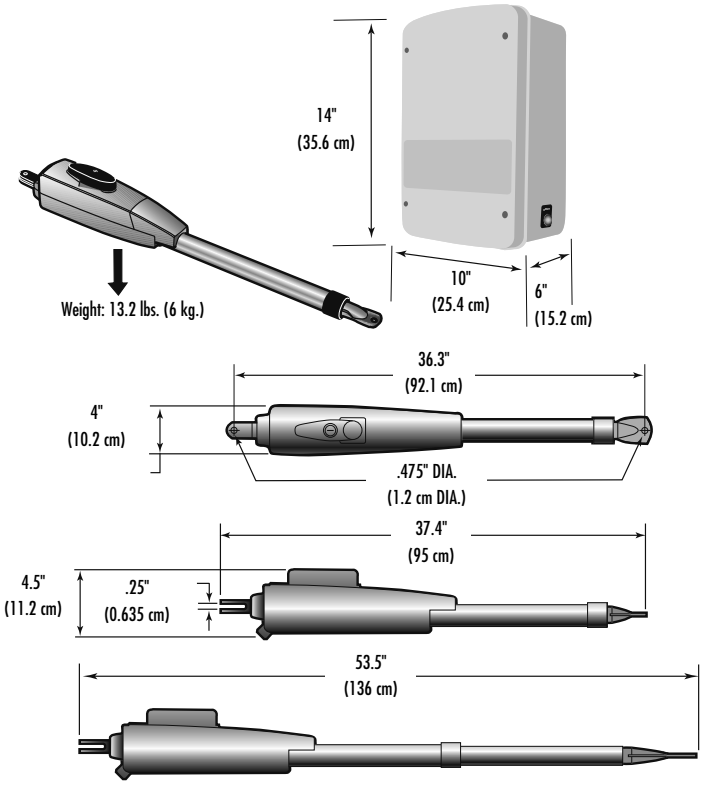

CARTON INVENTORY

This operator comes with the hardware to install on a gate that pulls-to-open. If your application requires the gate to be pushed open, accessory kit 50-19503 is required.

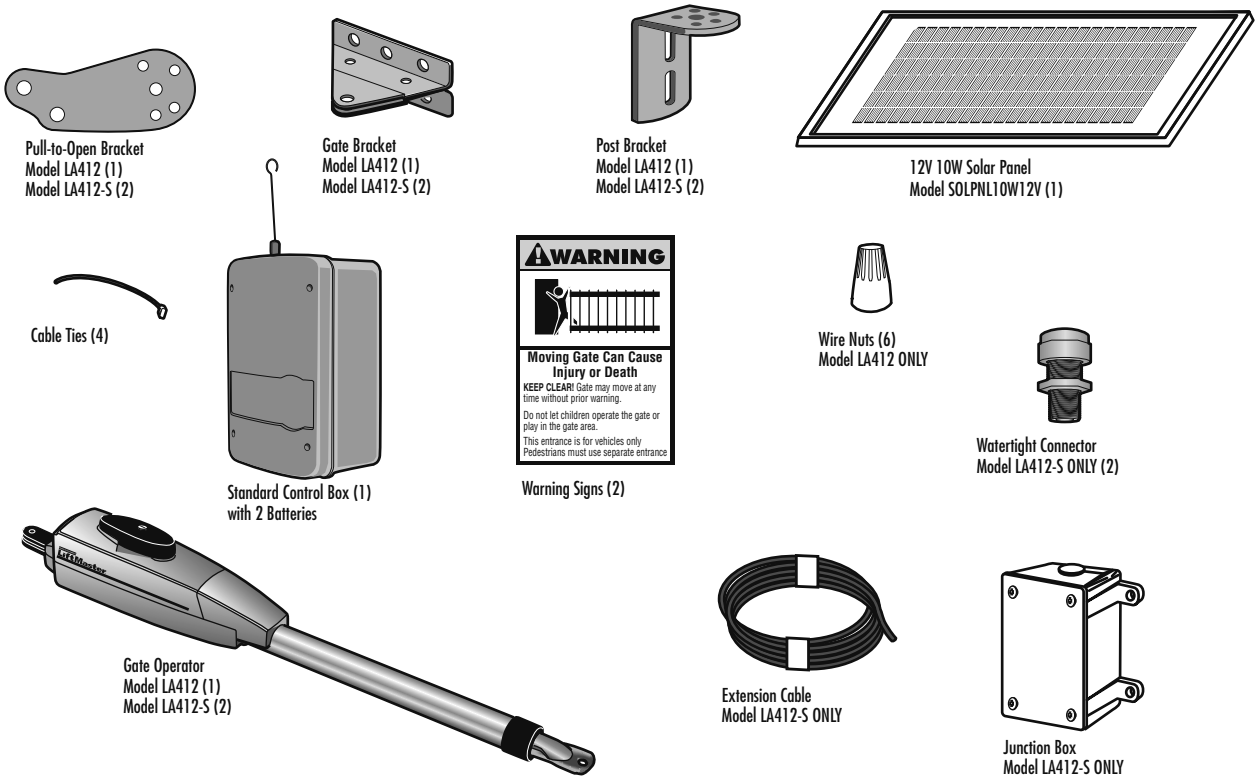

HARDWARE INVENTORY

NOTE: *Hardware quantities shown below are for LA412. Quantities are doubled for LA412-S.*

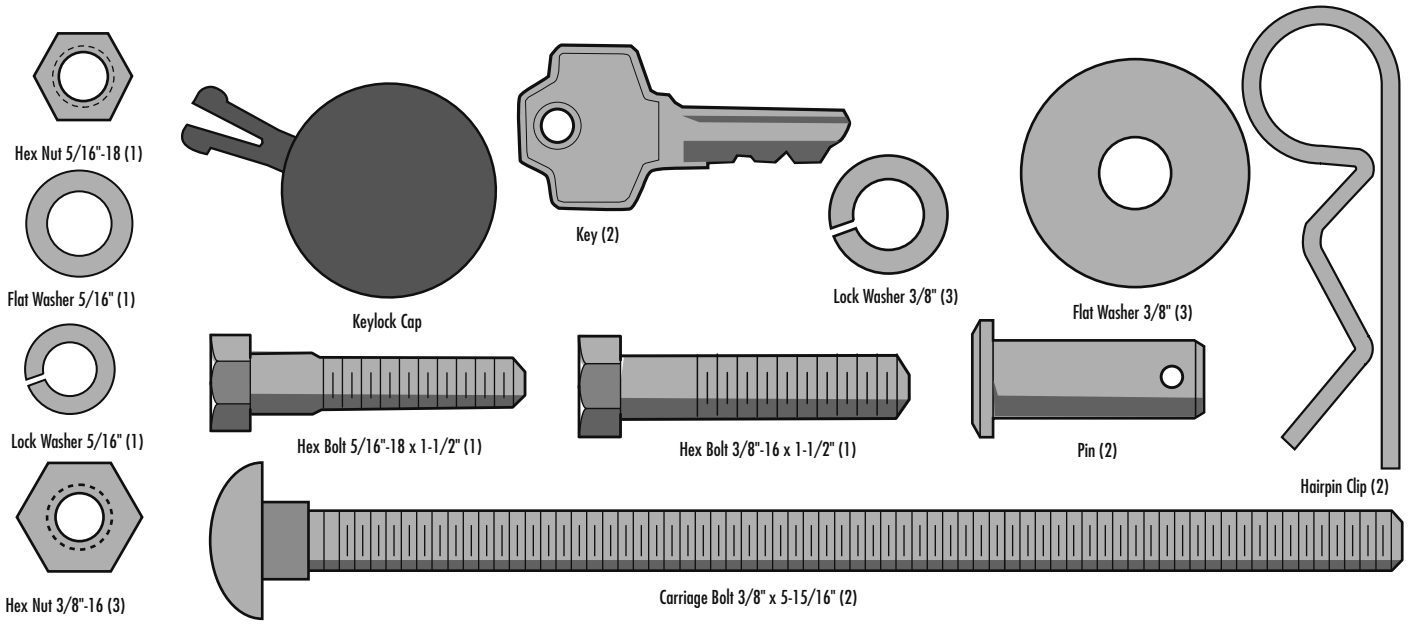

ADDITIONAL ITEMS FOR PURCHASE

The following items are REQUIRED to complete the installation:

ALL MODELS:

☐ HARDWARE

- 5/16" mounting hardware for gate bracket.
- The following hardware is needed to mount the control box depending on the mounting surface:

  Wood: Four #8 1-1/4" zinc plated wood screws.

  Metal: Four #10-32x6" zinc plated machine screws with nut and lock washers.

  Concrete, Brick, etc.: Four 1/4" x 1-3/4" masonry screws.

  Post: U-bolt size will vary depending on post. The U-bolt thread sizes for the control boxes are:
  1/4" - standard control box
  3/8" - XLM control box

☐ PHOTOELECTRIC SENSORS

The Model 50-220 photoelectric sensors are intended for installation with the operators covered in this manual.
To order call 1-800-528-2806 or visit www.liftmaster.com.

LA412-S ONLY:

☐ CONDUIT

UL Listed outdoor electrical conduit with 3/4" diameter to hold the extension cable between the junction box and the control box.

TOOLS NEEDED

During assembly, installation and adjustment of the operator, instructions will call for tools as illustrated below.

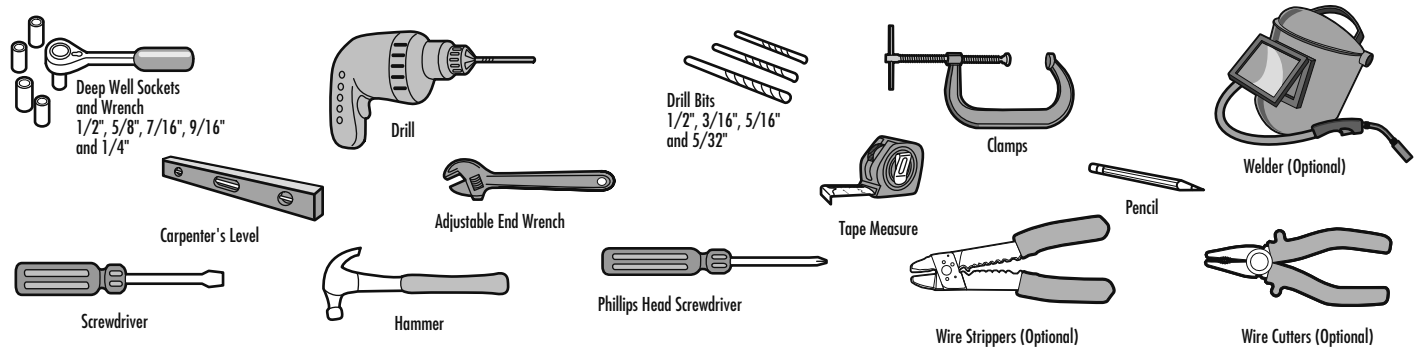

LEFT-HAND GATE

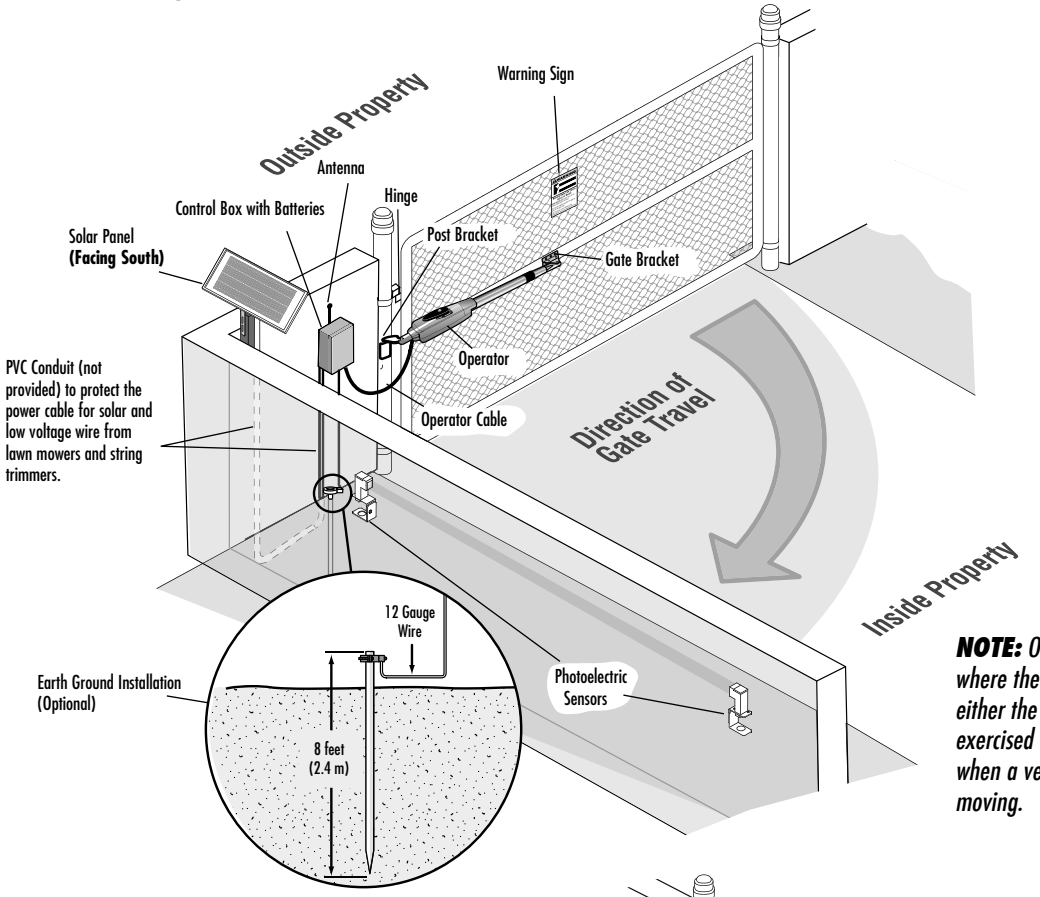

NOTE: *One or more non-contact sensors shall be located where the risk of entrapment or obstruction exists at either the opening or closing direction. Care shall be exercised to reduce the risk of nuisance tripping, such as when a vehicle, trips the sensor while the gate is still moving.*

RIGHT-HAND GATE

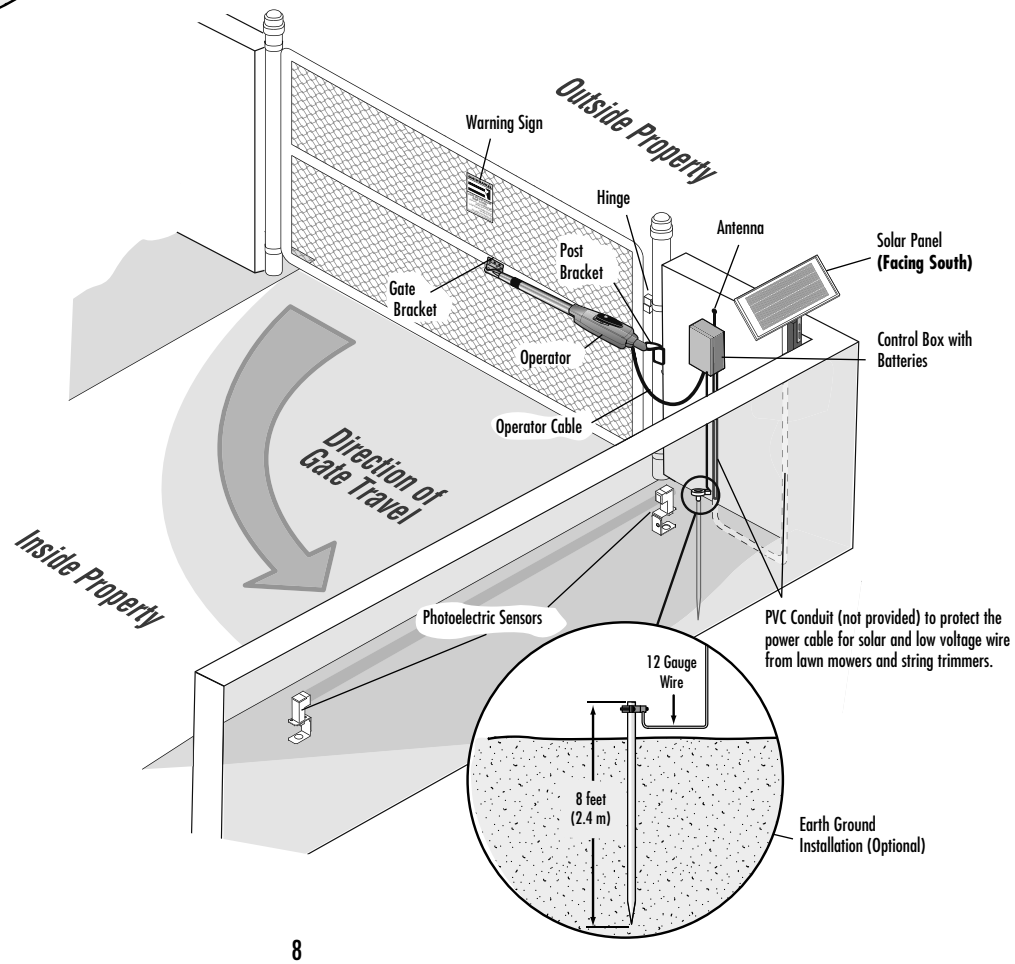

DUAL GATE

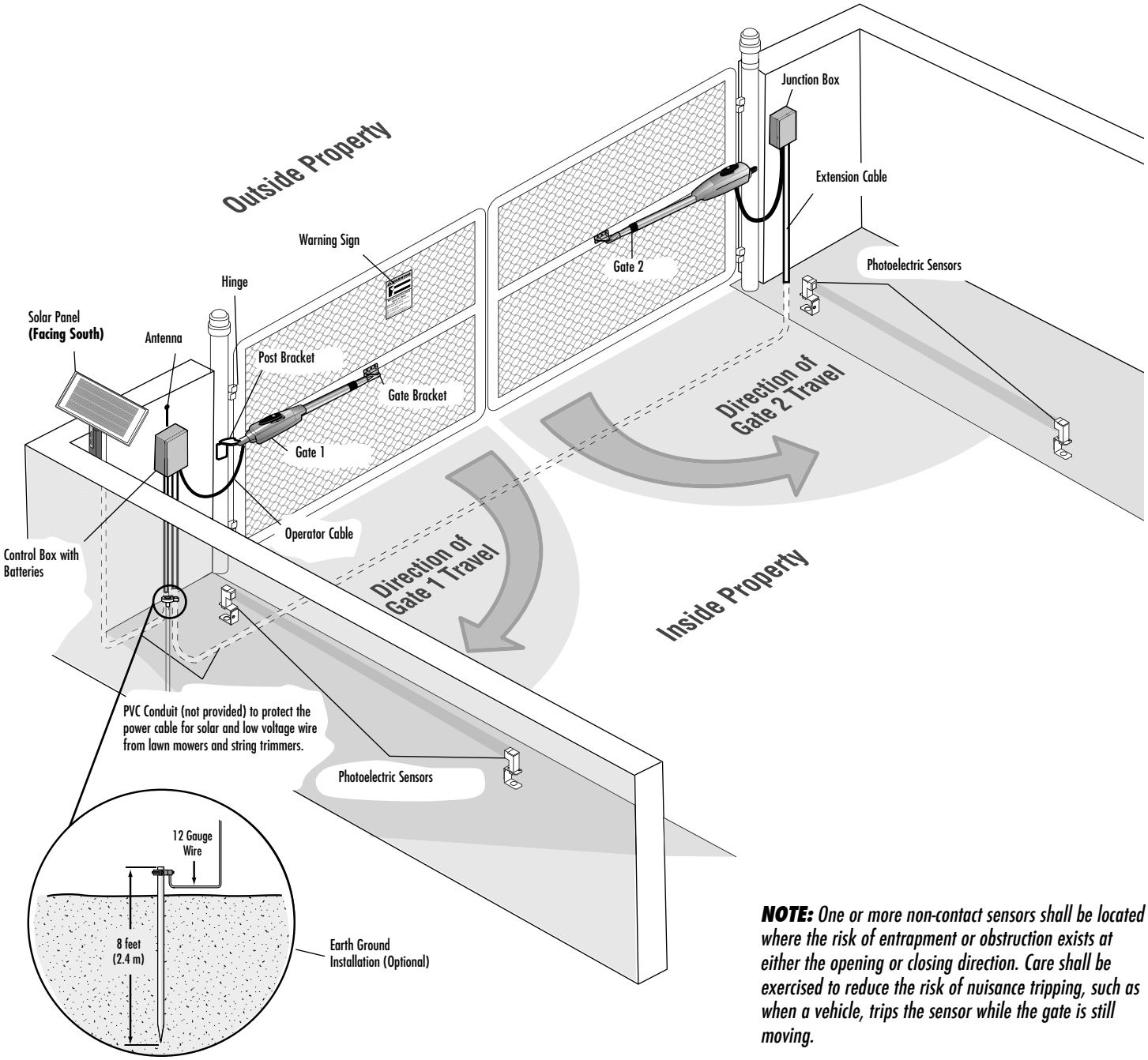

NOTE: *One or more non-contact sensors shall be located where the risk of entrapment or obstruction exists at either the opening or closing direction. Care shall be exercised to reduce the risk of nuisance tripping, such as when a vehicle, trips the sensor while the gate is still moving.*

INSTALLATION » CHECK YOUR GATE + MOUNTING OPTIONS

CHECK YOUR GATE

A Gate MUST be level. Gate and gate post MUST be plumb.

B Remove ANY/ALL wheels from the bottom of gate.

C Gate MUST NOT hit or drag across ground.

D Gate MUST swing freely and be supported entirely by its hinges.

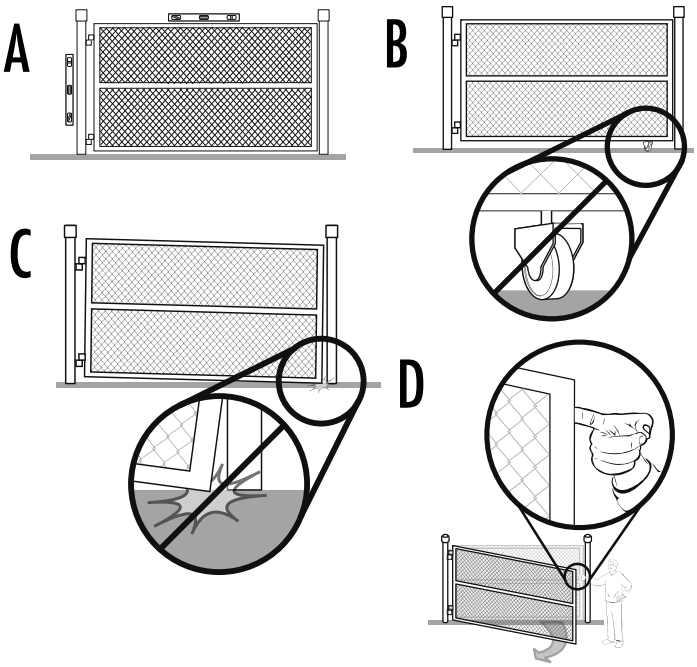

MOUNTING OPTIONS

Mounting locations vary depending on type and style of your gate. Minimum distance from the ground should not be less than 4 inches (10.2 cm) from the bottom of the gate operator arm.

RECOMMENDED:

■ = Gate post bracket mounting locations

● = Gate bracket mount locations

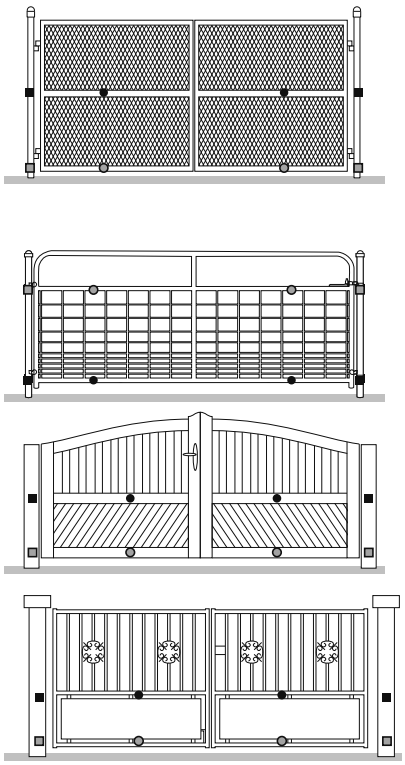

OPTIONAL:

□ = Gate post bracket mounting locations

○ = Gate bracket mount locations

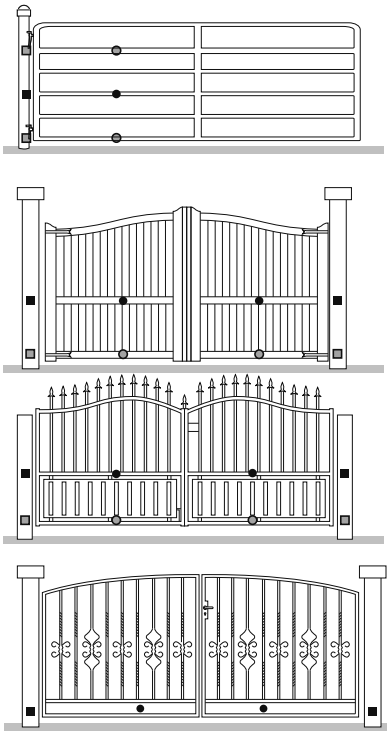

INSTALLATION » MANUAL RELEASE + DETERMINE POSITION OF THE PULL-TO-OPEN BRACKET + DETERMINE POSITION OF THE "OPTIONAL" PUSH-TO-OPEN BRACKET

MANUAL RELEASE

1 Insert the key into the lock and turn it 180° counterclockwise.

2 Turn the release lever 180° counterclockwise.

The operator is now in manual mode.

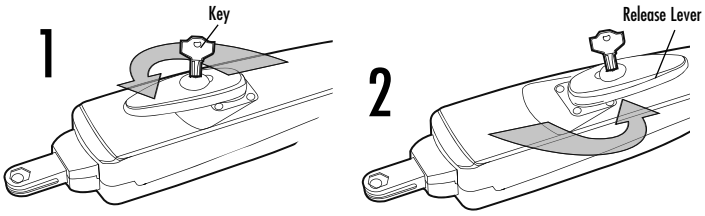

DETERMINE POSITION OF THE PULL-TO-OPEN BRACKET

The Pull-To-Open bracket can be assembled to work on a **Left-Hand** or a **Right-Hand** gate.

1 Review the gate types and select the type of installation you will require.

NOTE: *If the **Pull-To-Open** bracket is not assembled correctly you will damage the operator.*

1

LEFT-HAND GATE

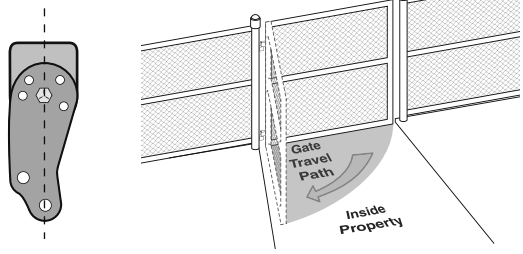

RIGHT-HAND GATE

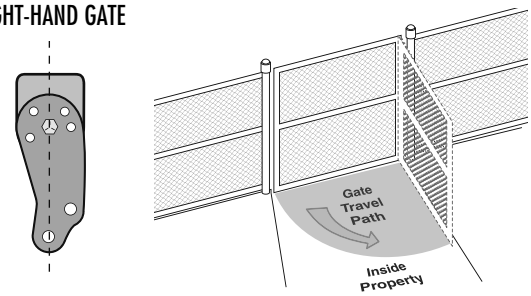

OR

DETERMINE POSITION OF THE "OPTIONAL" PUSH-TO-OPEN BRACKET

(NOT PROVIDED. SEE ACCESSORIES)

The Push-To-Open bracket can be assembled to work on a **Left-Hand** or a **Right-Hand** gate.

1 Review the gate types and select the type of installation you will require.

1

LEFT-HAND GATE

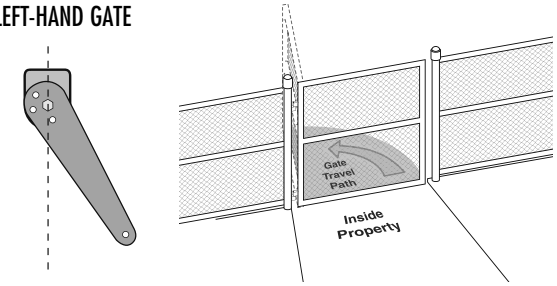

RIGHT-HAND GATE

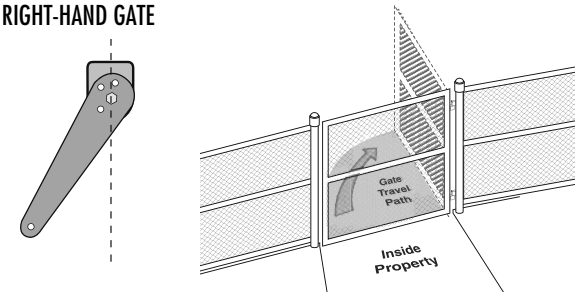

All the illustrations on the following pages display a typical Left-Hand Gate installation. For push-to-open installations refer to instructions with push-to-open kit 50-19503.

ASSEMBLE GATE POST BRACKET (PULL-TO-OPEN)

1 Assemble gate post bracket by placing pull-to-open bracket on top of post bracket.

2 Insert the bolt through both brackets and secure with washer, lock washer and nut.

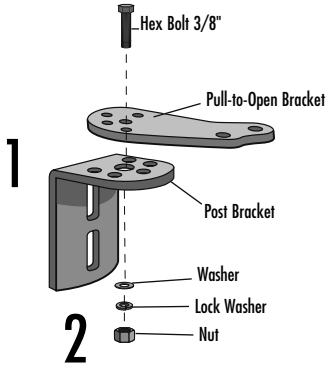

ATTACH BRACKETS TO GATE OPERATOR

1 Attach post bracket assembly to operator using pins and hairpin clips.

2 Attach gate bracket to operator using pins and hairpin clips.

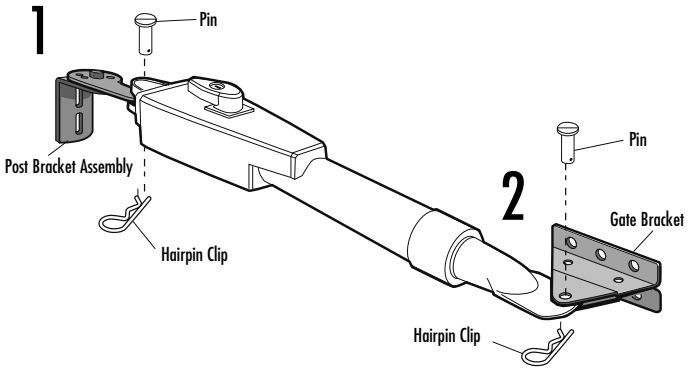

DETERMINE MOUNTING LOCATION

The gate post bracket assembly can be mounted several places on the gate post. Refer to the illustrations on page 10 for the ideal mounting location.

Refer to the illustrations to determine the appropriate dimensions for the Pull-To-Open bracket.

NOTE: *It may be necessary to add shims (angle iron, sheets of metal or wood) to the gate post to achieve the required dimensions.*

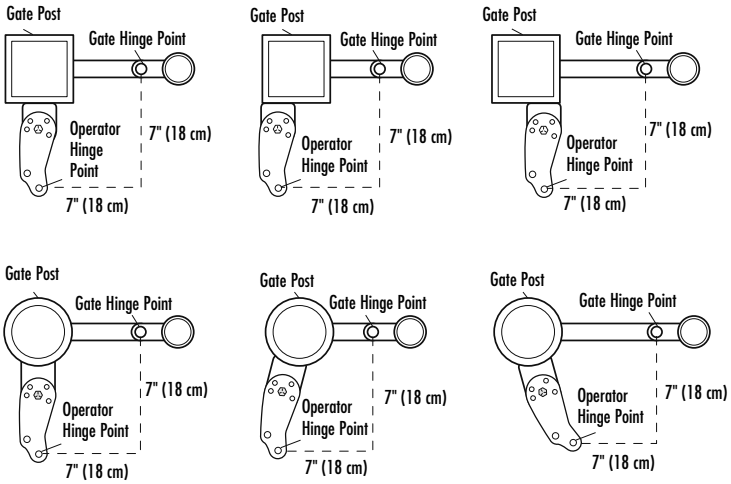

MEASURING AND MARKING FOR THE GATE BRACKET

Before proceeding, begin with the gate in the fully closed position. There are two methods for determining the proper location of the post brackets:

- Paper template (Located on the back page of this manual. Must be cut out.)
- Tape measure.

Either method will work depending on preference.

TEMPLATE METHOD

1. Close the gate.
2. Place the template (provided on the back page of this manual) under the center of the gate hinge point.
3. Use a screwdriver or dowel rod to temporarily mark the location in front of the gate post.

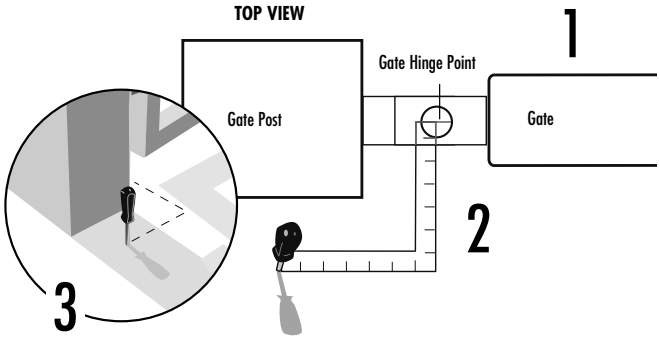

TAPE MEASURE METHOD

1. Close the gate.
2. Place the measuring tape under the center of the gate hinge point and measure out 7 inches (18 cm).
3. Use a screwdriver or dowel rod to temporarily mark the location of the first measurement.
4. Measure 7 inches (18 cm) from the previous mark.
5. Use the screwdriver or dowel rod to mark the location of the second measurement.

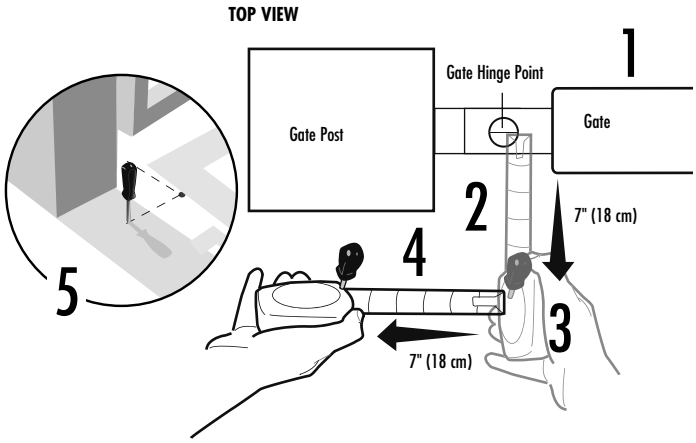

POSITION GATE OPERATOR ON GATE

NOTE: *The post bracket assembly can be mounted several places on the gate post. Refer to page 10 for mounting options.*

1. Open the gate to desired open position (no greater than 100°) and hold operator against gate.
2. Place the operator arm against gate post at the desired position. Temporarily secure gate post bracket with clamp. **The gate operator (arm) must be level.**
3. Mark mounting holes on gate for reference. Temporarily secure the gate bracket using a clamp.
4. Align the pull-to-open bracket to a position as **CLOSE AS POSSIBLE** above the screwdriver or dowel rod.
5. Insert hex bolt through pull-to-open bracket and post bracket and secure with washer, lock washer and nut.

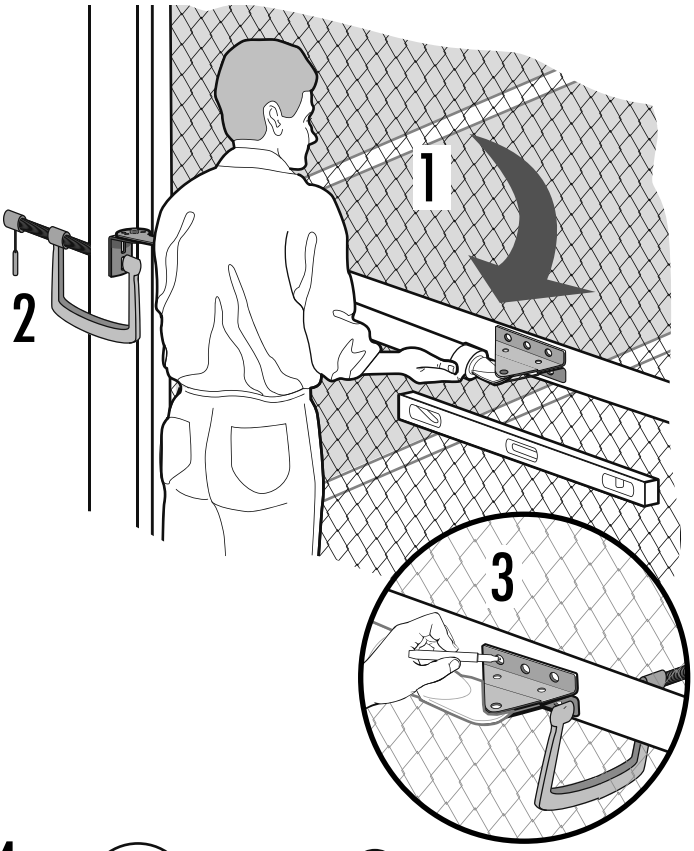

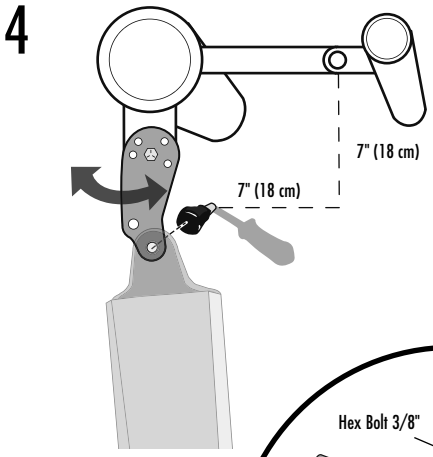

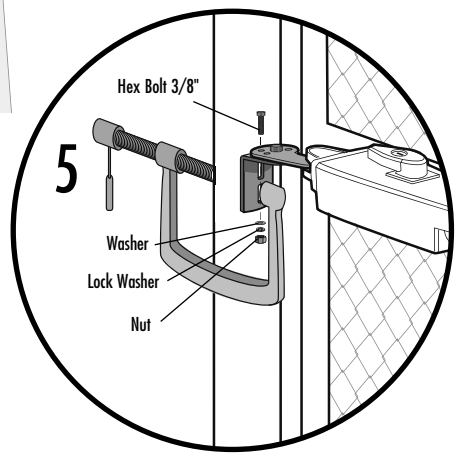

TEST GATE TRAVEL

NOTE: *If gate does not open and close completely adjust the position of the gate bracket and mark new mounting holes.*

1. Manually open and close the gate.
2. Ensure that the operator does not bind against the pull-to-open bracket.
3. Ensure that the piston does not bottom out.

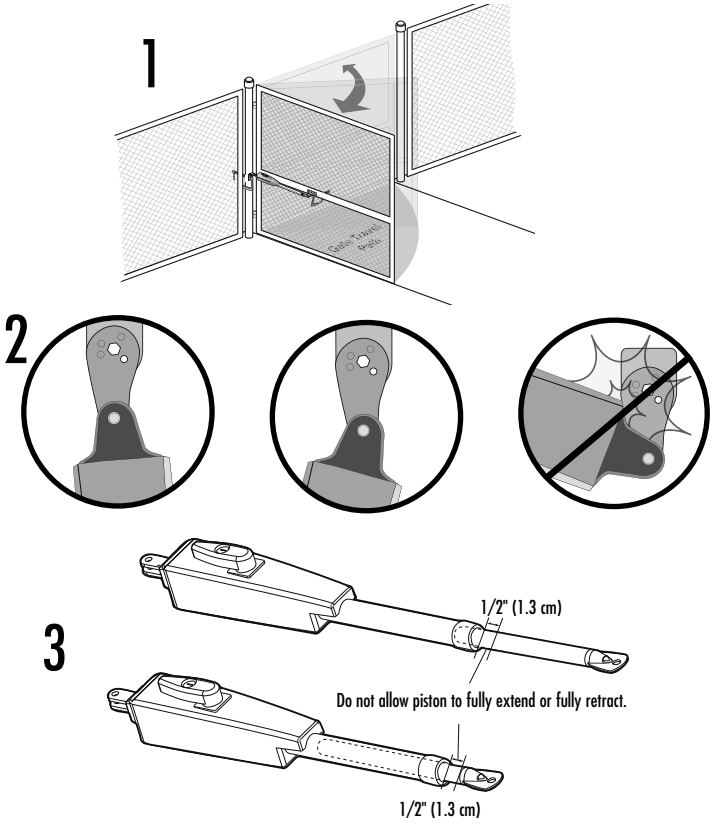

SECURE POST BRACKET TO GATE POST

The gate operator (arm) must be level.

1. Mark holes for the post bracket. Remove the clamp and the operator, set aside.
2. Drill adequate holes in the gate post.
3. Secure the post bracket to the gate post using hardware.

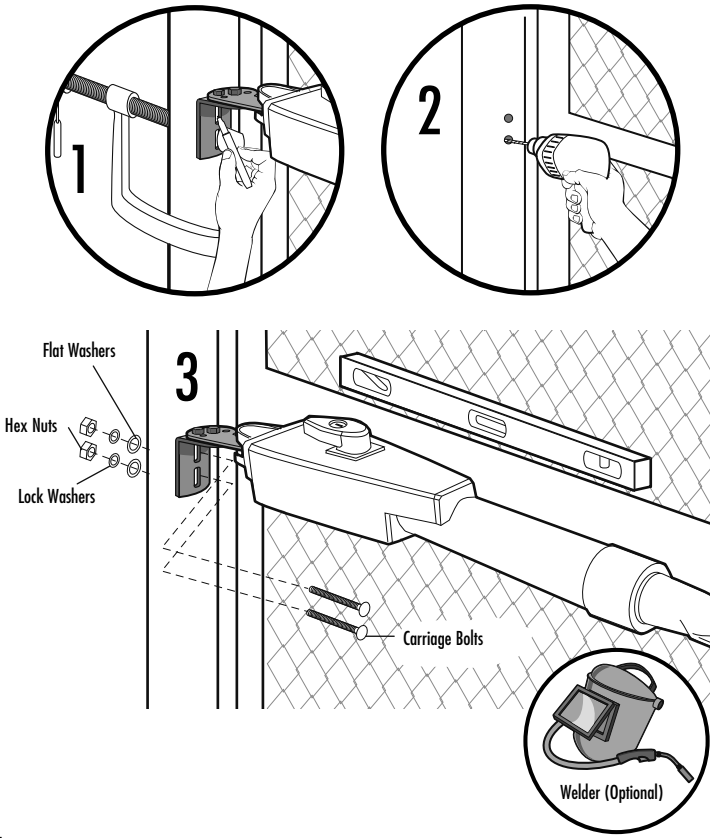

SECURE GATE BRACKET TO GATE

The gate operator (arm) must be level.

Some installations may require additional reinforcement be installed on the gate.

1. Drill holes in gate (or reinforcement, if necessary) that are large enough for the gate bracket mounting hardware.
2. Secure the gate operator to the gate using hardware (not provided).
3. Manually move the gate to verify that it opens and closes fully.

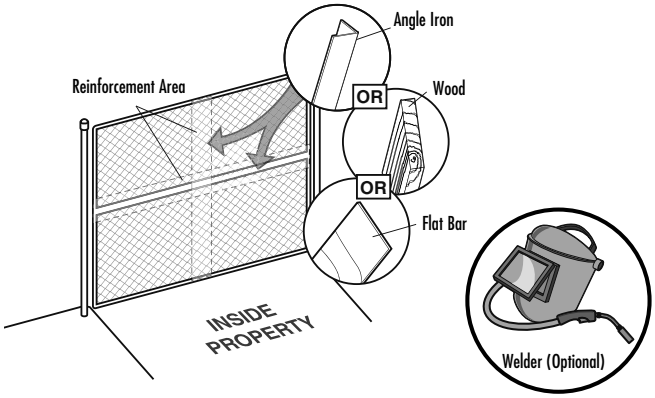

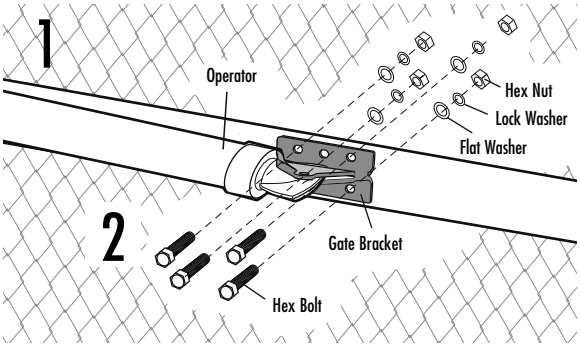

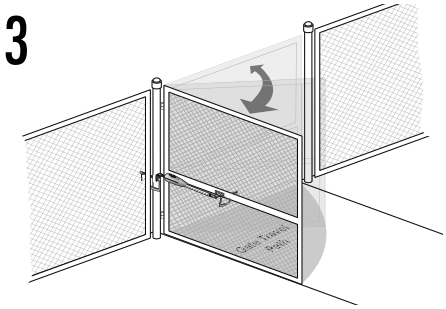

WARNING SIGN PLACEMENT

Warning signs MUST be installed on both sides of the gate and in plain view.

1. Fasten warning signs to the gate with cable ties.

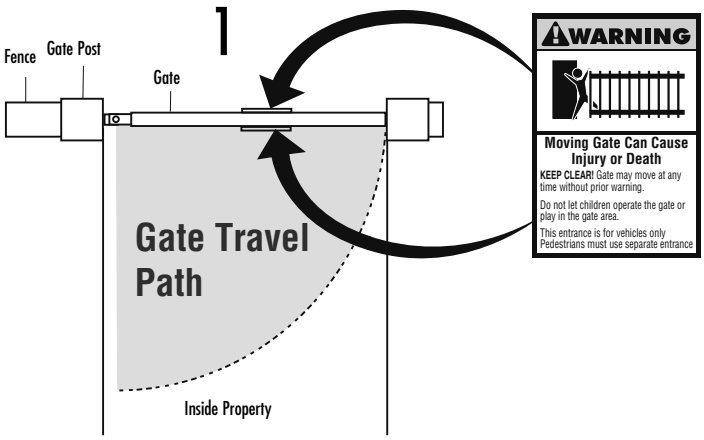

If installing a 2nd operator, repeat the previous installation steps for the second gate before proceeding to the next page.

MOUNT THE CONTROL BOX

The control box MUST be mounted within 5 feet (1.52 m) of the gate operator. Mount the control box as high as possible for best radio reception.

1 Remove screws and open the control box.

2 Disconnect the reset button, alarm, and coaxial connector.

3 Loosen screws to remove the control board and mounting bracket.

4 Remove the control board.

5 Remove batteries and set aside.

6 Select mounting holes and knock out using a screwdriver and hammer.

7 Secure the control box to mounting surface using the appropriate hardware (not provided).

A. Post

B. Wall

C. Column

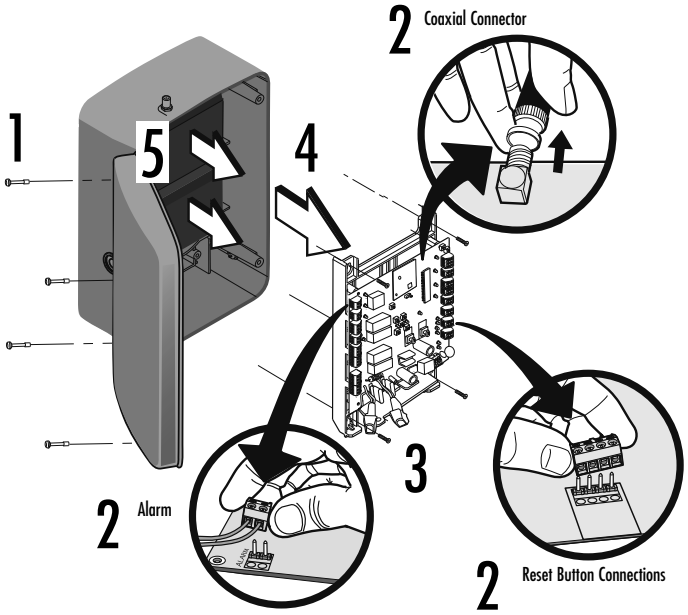

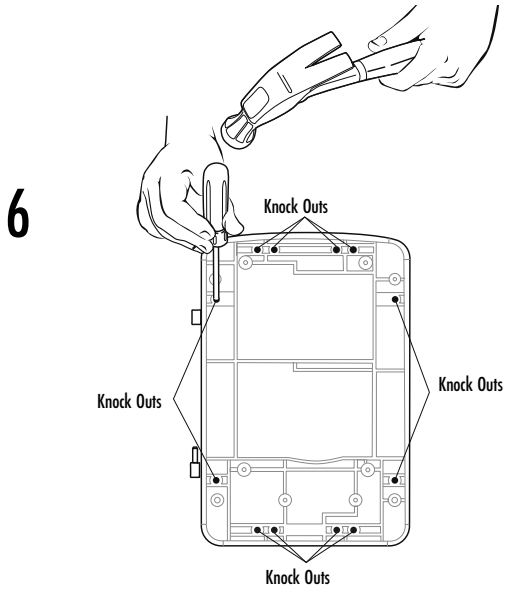

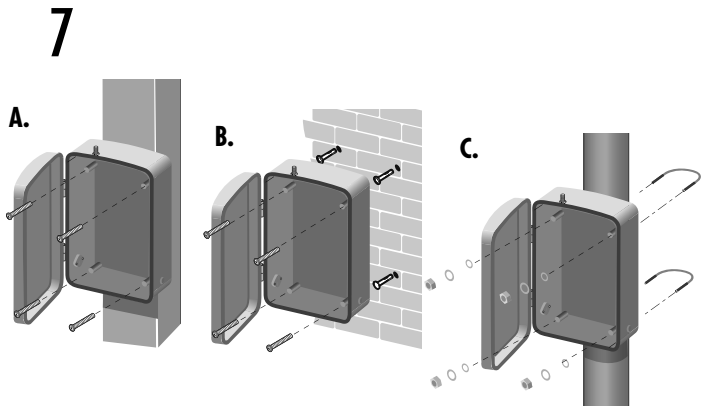

INSTALL THE CONTROL BOARD

NOTE: *Make sure the battery leads are on the left side of the control box and not pinched.*

1 Attach the antenna.

2 Reinstall the batteries, control board, alarm and reset button.

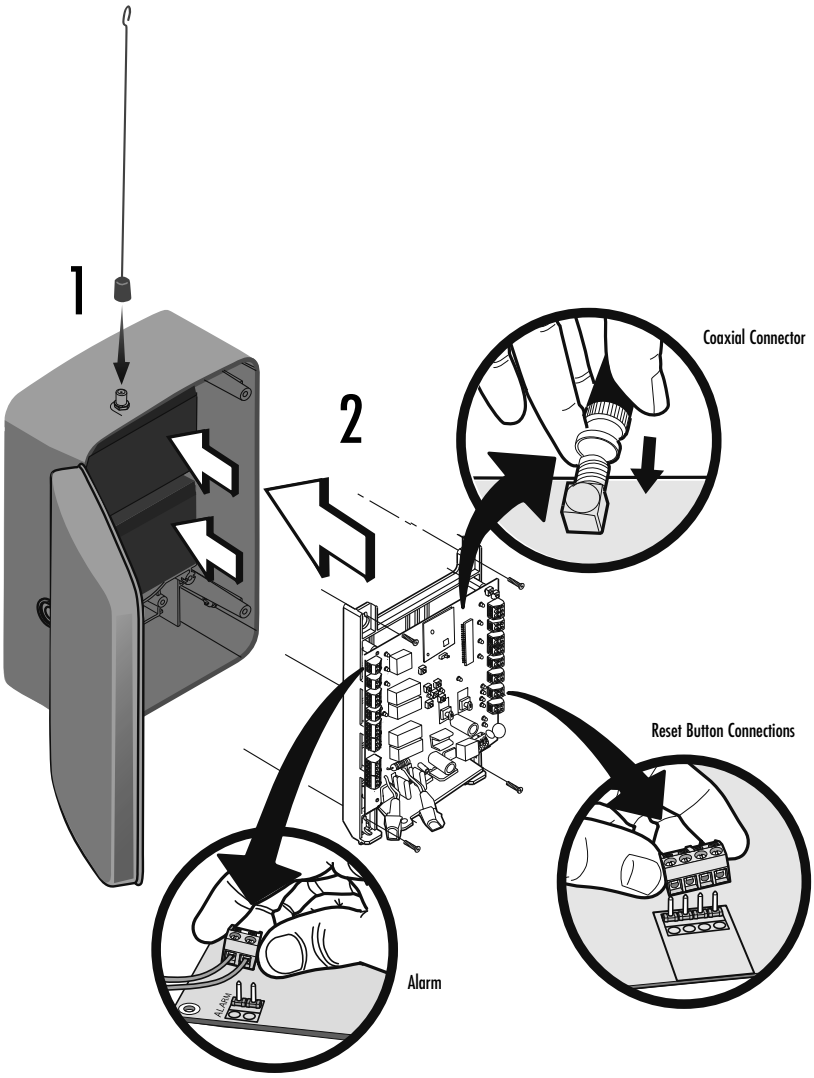

MOUNT THE CONTROL BOX (XLM)

The control box MUST be mounted within 5 feet (1.52 m) of the gate operator. Mount the control box as high as possible for best radio reception.

1 Open the control box. The control box door may be removed by opening the door 90°. Lift the door from the hinges and set aside until the installation is complete.

2 The control box can be mounted to a post with 'U' bolts. See chart below. The knock out will accommodate a 3/8" diameter 'U' bolt.

Type and Size	'U' Bolt Opening
Standard 3" Round Pipe	3-1/2"
Standard 4" Square Post	4"
Standard 6" Square Post	6"

3 Select center mounting holes (top and bottom) knock out using a screwdriver and hammer. Use knock outs located at the 4 corners of the control box for wall or column mounting.

1

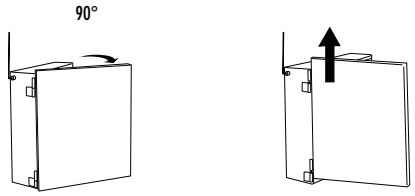

2

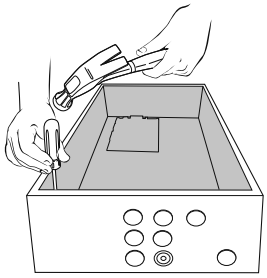

3

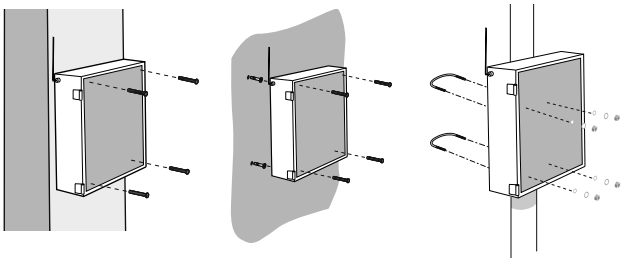

EARTH GROUND ROD INSTALLATION (REQUIRED)

It is important to install the ground rod when using a metal control box to prevent serious injury to persons or damage to the operator.

1 Install earth ground rod within 3 feet (0.9 m) of the operator.

2 Connect ground rod with #12 copper wire to one of the two green ground screws inside the control box.

The XLM control box wires the same as the standard control box. Follow all instructions for the standard control box. The illustrations show the standard control box, not the XLM control box.

NOTE: *The additional standoffs are specifically designed to mount up to 3 Chamberlain loop detectors model LO7LP (not provided).*

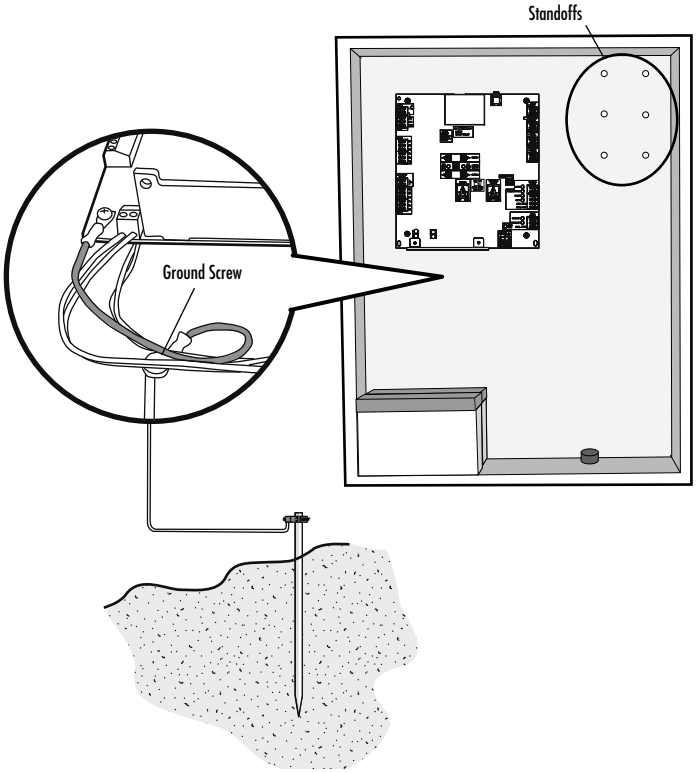

CONNECT THE GATE OPERATOR (GATE 1) TO THE CONTROL BOX

1. Select hole in bottom of the control box to be used for the operator cable.
2. Insert the watertight connector into the bottom of the control box and tighten with nut.
3. Insert the operator cable through the watertight connector mounted in the bottom of the control box.
4. Extend the operator cable and wires to the **Gate 1** connector and connect as shown.
5. Tighten watertight connector nut.

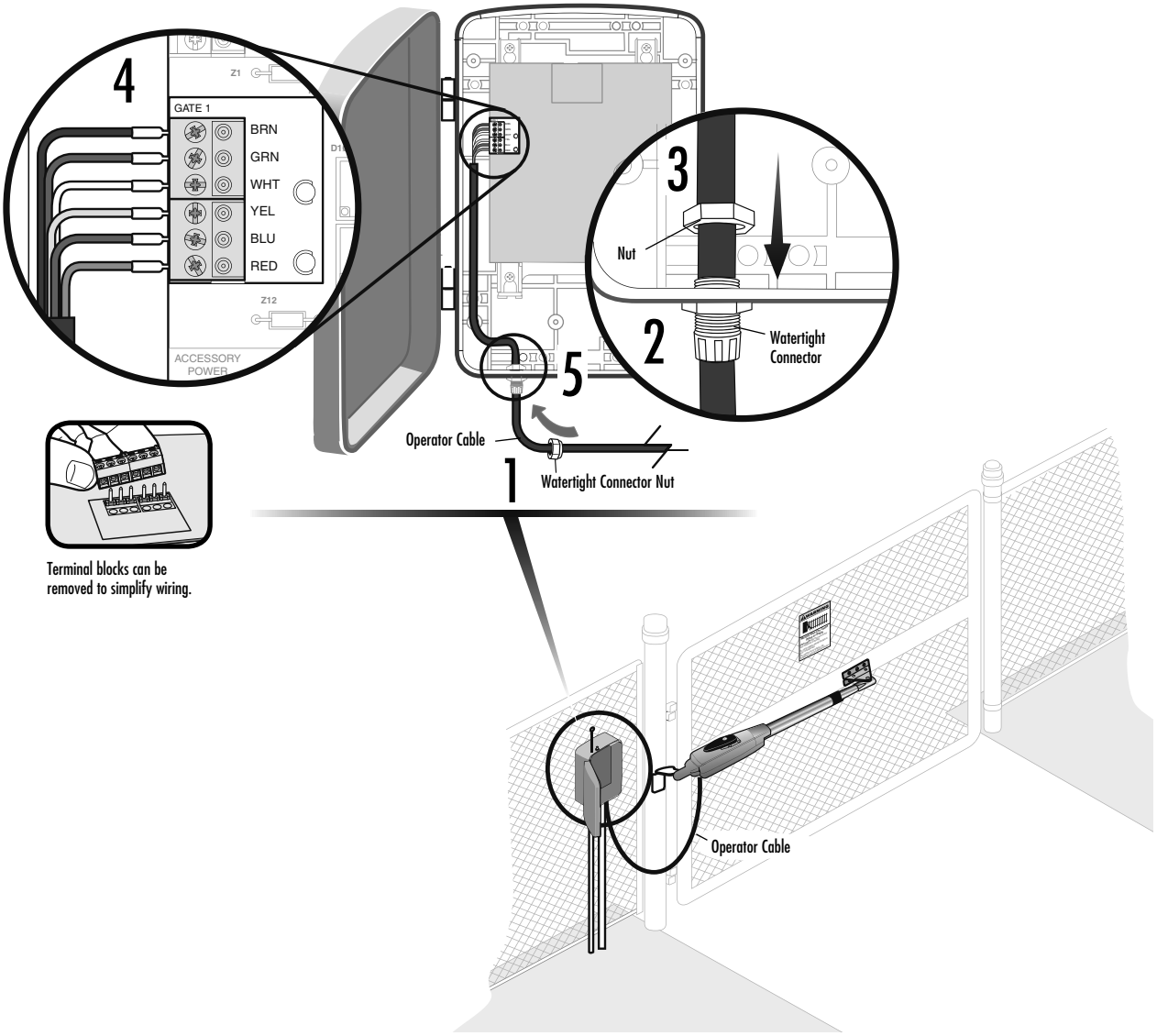

If installing one operator, proceed to page 25. If installing two operators, continue to the next page.

SET THE LOCK/BIPART DELAY (MODEL LA412-S ONLY)

Occasionally in dual gate installations, one gate will need to open first and close second. This would happen if there was an ornamental overhang on one gate or if using a solenoid lock, for example. This gate is called the Primary gate and needs to be connected to Gate 1 connections on the control board. Thus, it is preferred that the control box be installed on the same side as this gate. If there is no appropriate location on that side for the control box, then mount the control box on the opposite side, but connect the operator closest to the control box to the Gate 2 connector and the operator on the opposite side to the Gate 1 connector.

NOTE: *The gate with the longer travel span (opening) must be set as the primary gate (GATE 1).*

1 The LOCK/BIPART DELAY switch on the control board needs to be set to the ON position.

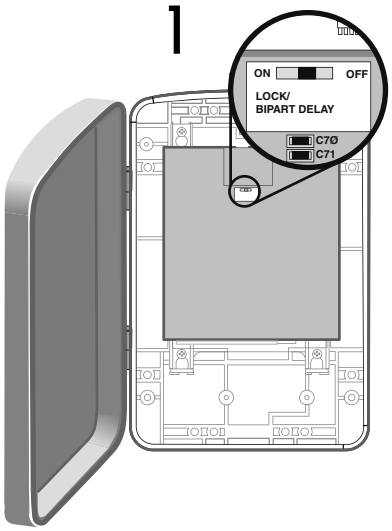

The following illustration shows a dual gate configuration with a decorative overlapping piece on the outside of the gate.

If a solenoid lock is being used on a gate, the gate with the lock attached to it is the primary gate.

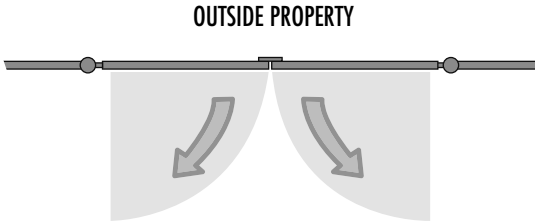

Primary Gate - Connect to Gate 1 Connector on Control Board.

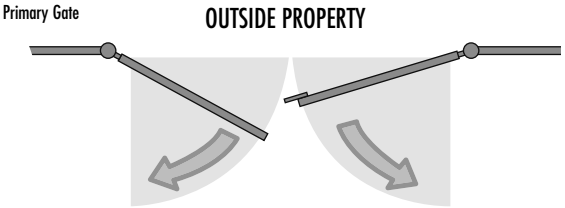

CONNECT THE GATE OPERATOR (GATE 2) TO THE CONTROL BOX (MODEL LA412-S ONLY)

Before digging, contact local underground utility locating companies.

1 Trench across driveway to bury the extension cable. Use PVC conduit to prevent damage to cables.

2 Select hole in bottom of the control box to be used for the extension cable. Insert extension cable through watertight connector nut and through an available watertight connector mounted in the control box.

3 Extend cable and wires to **Gate 2** connector and connect as shown.

4 Secure extension cable to control box using watertight connector nut.

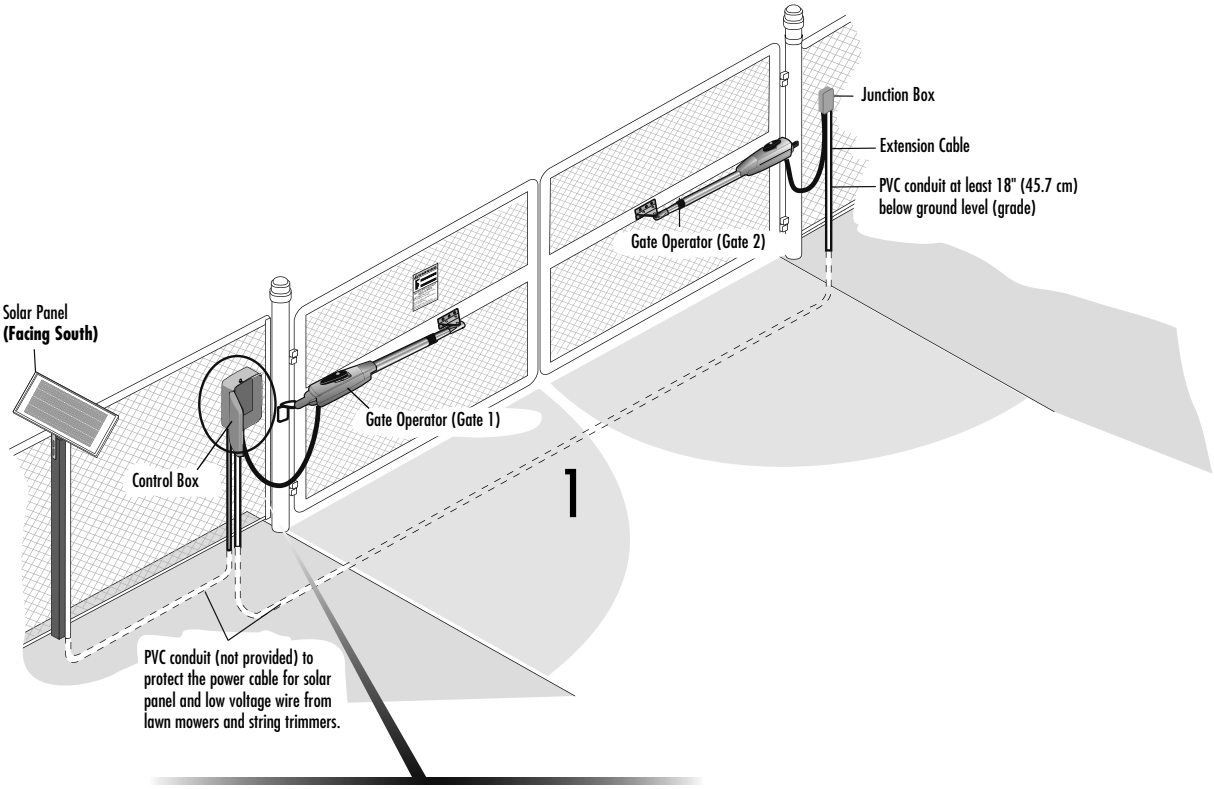

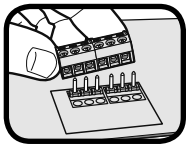

Terminal blocks can be removed to simplify wiring.

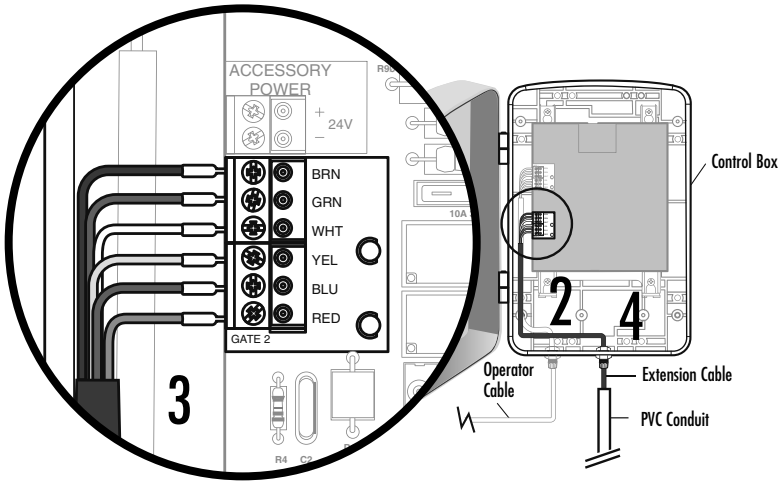

WIRING » JUNCTION BOX (MODEL LA412-S ONLY)

JUNCTION BOX

The following items are required to complete the junction box installation:

- 4 x 4 Junction Box with 3/4" NPT threaded port holes
- Screws
- PVC Conduit

1 Open the junction box by removing screws (4) and set aside.

2 Mount the junction box within 3 feet (0.9 m) of second operator.

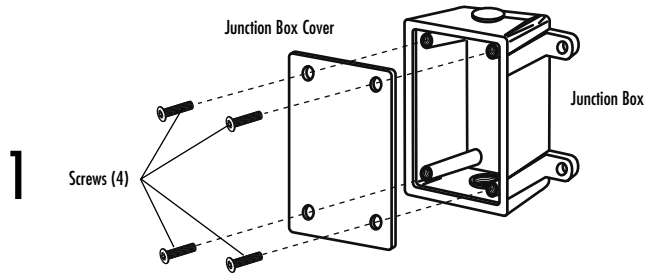

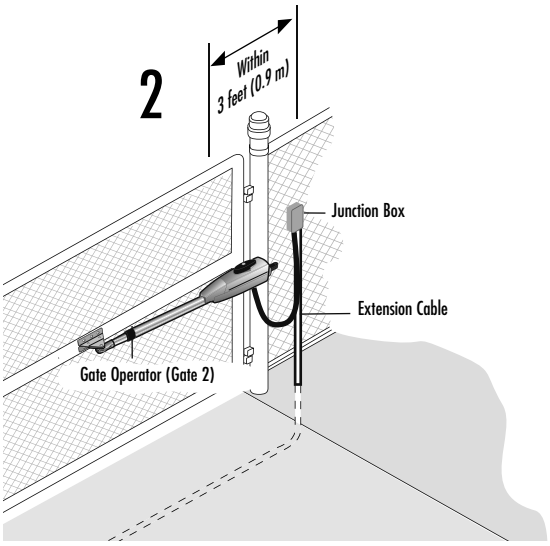

3 Route operator cable and extension cable through watertight connector nut and watertight connector.

4 Insert cables and watertight connectors into the holes in the bottom of the junction box (not provided).

5 Feed extension cable through PVC conduit and secure with nut.

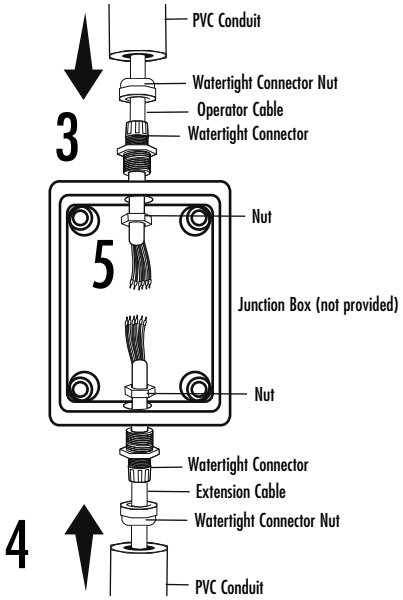

WIRING » JUNCTION BOX (MODEL LA412-S ONLY)

6 Remove terminals from operator cable. Strip wires and twist like colored wires together with wire nuts.

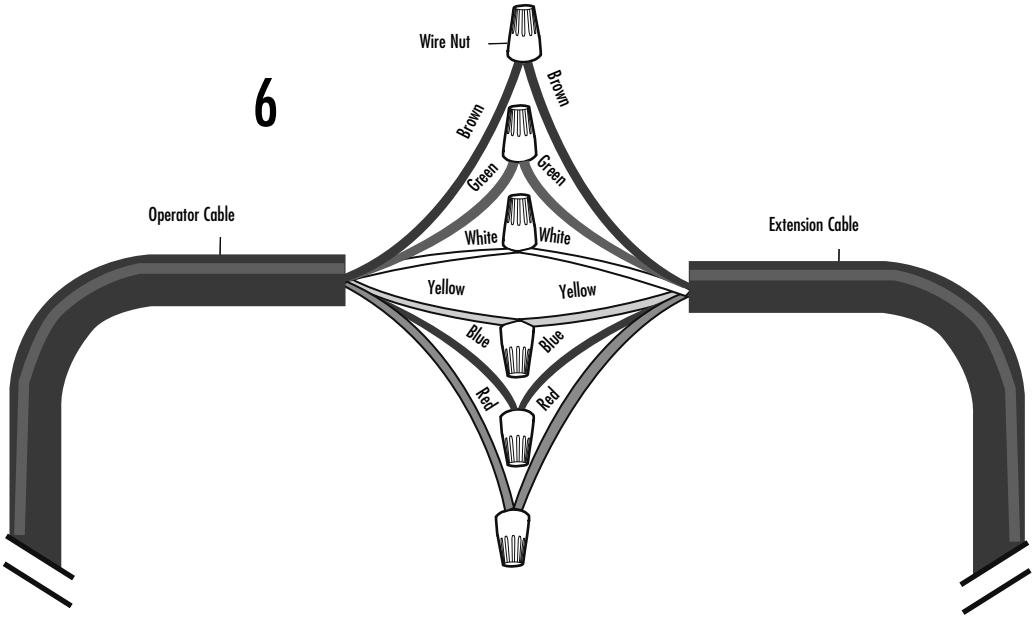

7 Put wires inside of junction box.

8 Secure operator and extension cables with watertight connector nut.

9 Reinstall cover.

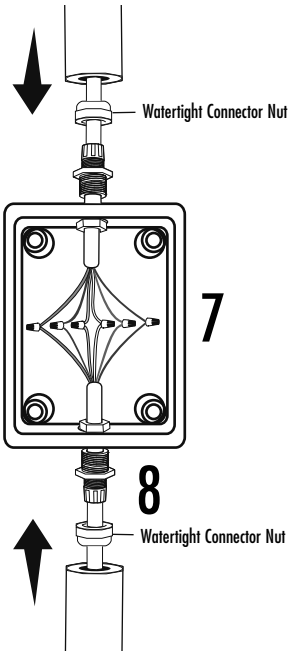

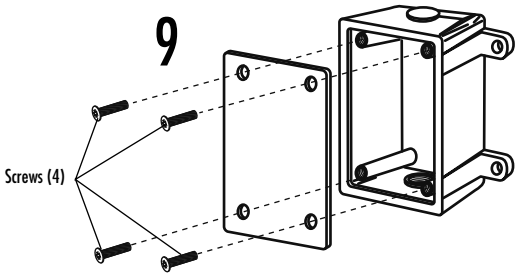

SELECT SITE FOR SOLAR PANEL(S)

The solar panel(s) must be located in an open area clear of obstructions and shading for the entire day. The solar panel(s) comes with a 10 foot (3 m) cable. If a location near the control box cannot be found, an additional cable will be required. The LA412 Solar Gate Operator is not supported in northern climates where temperatures reach below -4° F. This is due to cold weather and a reduced number of hours of sunlight during the winter months. Cycle rate may vary from solar chart for areas that reach below 32° F. Solar panels should be cleaned on a regular basis for best performance to ensure proper operation.

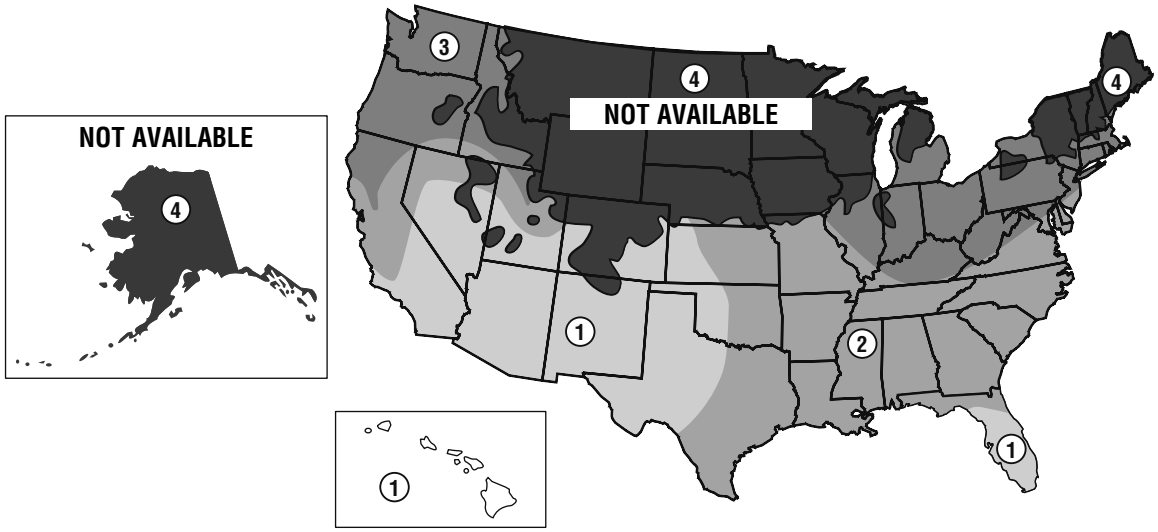

NUMBER OF CYCLES PER DAY					
Single Arm Installations					
			Zone 1	Zone 2	Zone 3
10W SOLAR	1 PANEL	Arm Only	50	40	12
		Accessories			
		Solenoid Lock	50	35	10
		Loop	50	31	10
		LM202	50	31	10
20W SOLAR	2 PANEL	Arm Only	50	50	28
		Accessories			
		Solenoid Lock	50	50	25
		Loop	50	50	26
		LM202	50	50	26
30W SOLAR	3 PANEL	Arm Only	50	50	46
		Accessories			
		Solenoid Lock	50	50	40
		Loop	50	50	44
		LM202	50	50	44

NUMBER OF CYCLES PER DAY					
Dual Arm Installations					
			Zone 1	Zone 2	Zone 3
10W SOLAR	1 PANEL	Arms Only	50	25	8
		Accessories			
		Solenoid Lock	50	23	7
		Loop	50	23	6
		LM202	50	23	6
20W SOLAR	2 PANEL	Arms Only	50	50	20
		Accessories			
		Solenoid Lock	50	50	18
		Loop	50	50	18
		LM202	50	50	18
30W SOLAR	3 PANEL	Arms Only	50	50	30
		Accessories			
		Solenoid Lock	50	50	27
		Loop	50	50	28
		LM202	50	50	28

The map (above) and cycles/day ratings are approximations and do not account for installed accessories that draw additional battery power. Ratings vary based on gate construction and installation. They are also shown for using a single 10W solar panel in conjunction with two 12 Volt 7.0 AH batteries. Ratings will improve by adding additional 10W solar panels. If required, up to three 10W panels (30W total) can be wired in parallel to increase the number of cycles per day.

NOTE: *The solar panel(s) recommendation is based upon the average solar radiation and the temperature effects on batteries in the given regions. Local geography and weather conditions may require additional solar panels. Solar panels cannot be installed in areas that experience heavy fog or lake effect rain and snow.*

POSITION SOLAR PANEL(S)

The location of the panel(s) is critical to the success of the installation. In general, the panel(s) should be mounted using the provided angle bracket facing **due south**. The solar panel(s) should be mounted in an area clear of all obstructions and shading from buildings and trees. If the panel(s) is not casting a shadow, the battery is not being charged.

NOTE: *Tall trees or buildings that do not shade the solar panel(s) in the summer could shade the solar panel(s) during the winter months when the sun sits lower in the sky.*

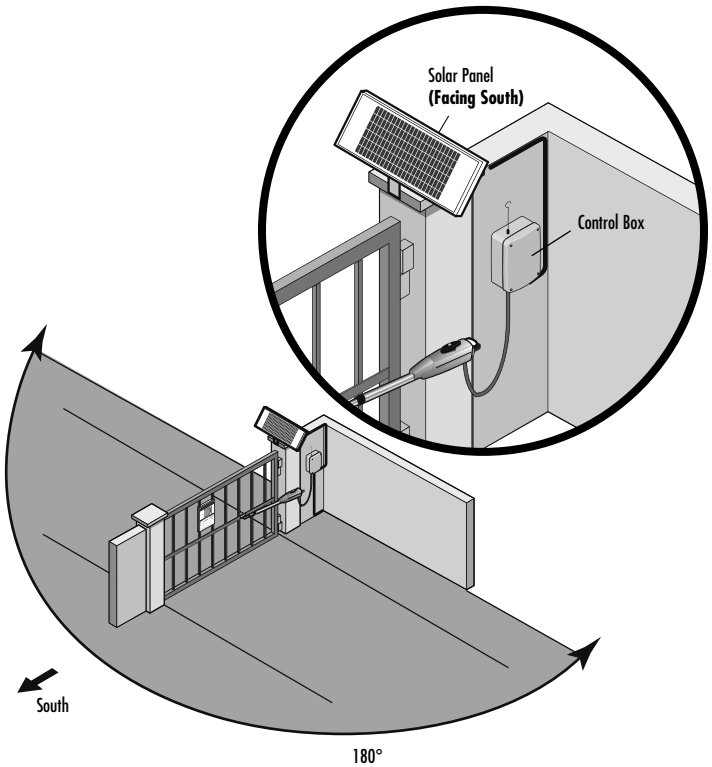

TIP: *The area around the solar panel(s) should be clear of shadows or obstructions to the sun for a 180° arc east to west.*

TIP: *Wire runs should be kept as short as possible. The solar panel(s) can be located up to 100 feet (30.48 m) from the operator using #16 AWG wire in any direction, including elevating it.*

DO NOT install solar panel near potential shading or obstructions that will block the panel during any part of the day.

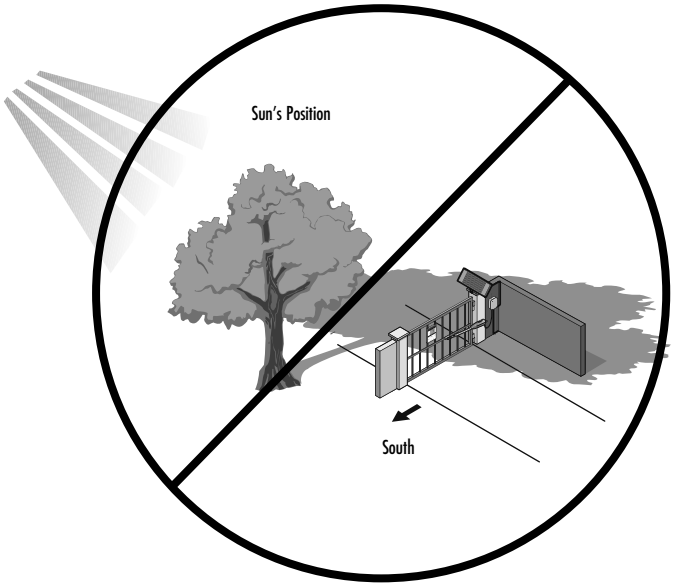

TIP: *To optimize the system for winter operation the angle can be increased an additional 15° (solar panel(s) sits more vertical).*

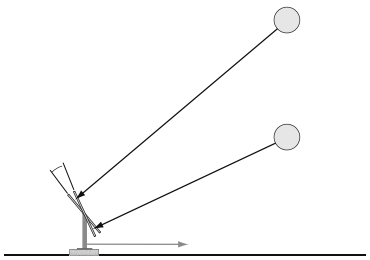

INSTALL THE SOLAR PANEL(S)

Solar panel(s) MUST be installed facing south. Use a compass to determine direction.

1. Position solar bracket on mounting surface. Mark and drill holes.
2. Insert two bolts into the track located on the back of the solar panel(s).
3. Slide bolts in track away from bolt hole and align both bolts.
4. Secure solar panel(s) to solar bracket using two washered nuts.
5. Secure solar panel(s) assembly to mounting surface using appropriate hardware.

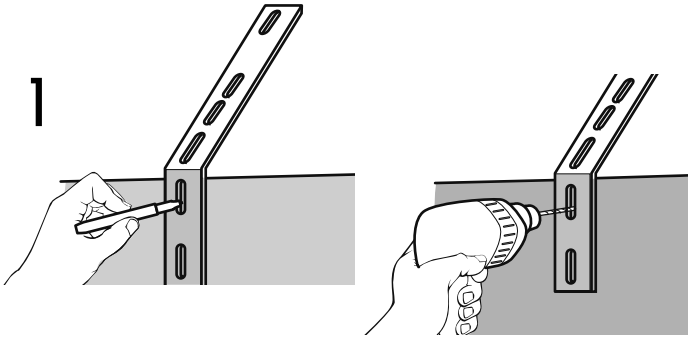

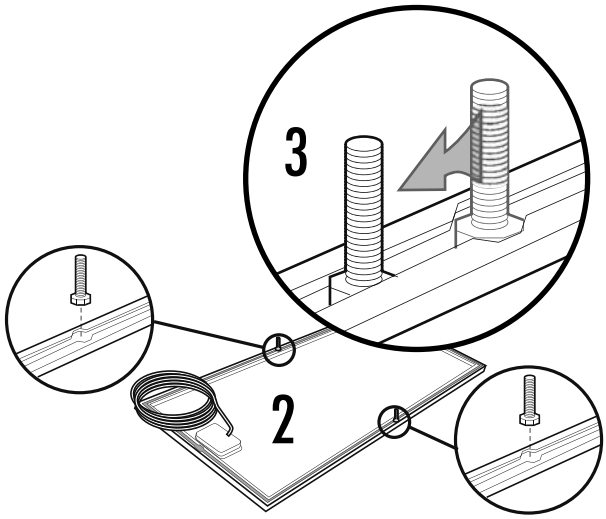

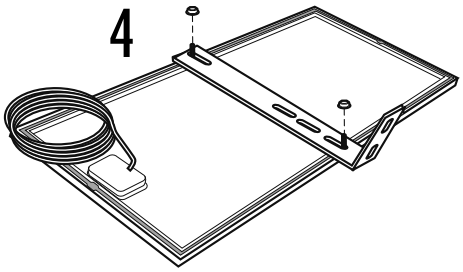

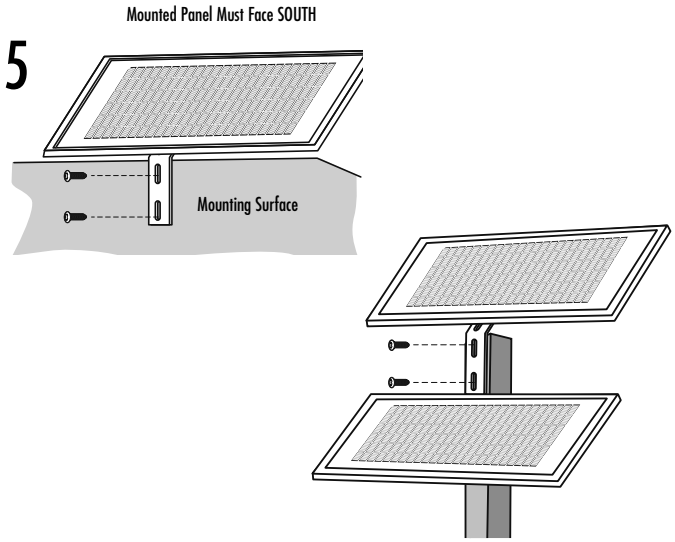

SOLAR PANEL INSTALLATION » CONNECT SOLAR PANEL(S) TO OPERATOR CONTROL BOX + CONNECT BATTERIES

CONNECT SOLAR PANEL(S) TO OPERATOR CONTROL BOX

1 Open the control box cover.

2 Disconnect all power and batteries from the control board.

3 Run the solar panel cable to the bottom of the control box. Thread the cable through the watertight connector and pull the cable through until it reaches the **AC PWR/SOLAR** connector on the control board.

4 Tighten the watertight connector on the cable.

5 Attach the solar panel wires to **AC PWR/SOLAR** input terminal (polarity is not important). Leave the **AC PWR/SOLAR** earth ground connection open. With the batteries still disconnected, the control board should power up if the solar panel is correctly installed and the sun is shining (the diagnostic LED will blink).

NOTE: *The system is designed to be charged by either an AC plug-in transformer or a separate solar panel, but not both.*

6 Use the cable ties to secure the solar panel cable away from places where it could be damaged.

NOTE: *If the sky is too overcast to allow the solar panel to power up the system, the panel will need to be verified at another time when the sun is shining. There is no other way to verify the panel installation.*

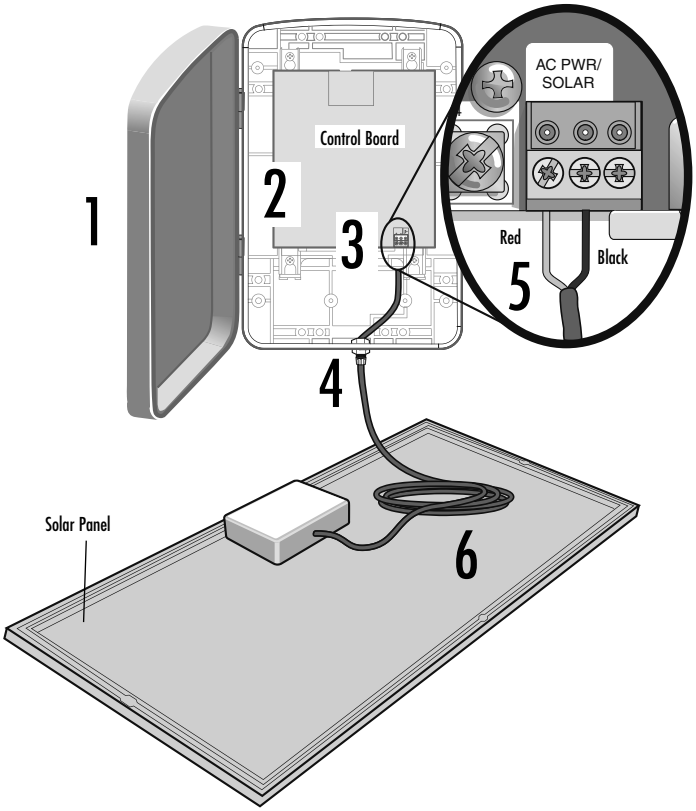

CONNECT BATTERIES

The batteries are charged in circuit by using the solar panel (provided).

1 Locate the two white battery plugs on the left-hand side of the control box.

2 Connect the plug from the battery to connector on the control board.

NOTES: *Batteries will degrade over time depending on temperature and usage. For best performance, the batteries should be replaced every 3 years. Batteries do not perform well in extremely cold temperatures.*

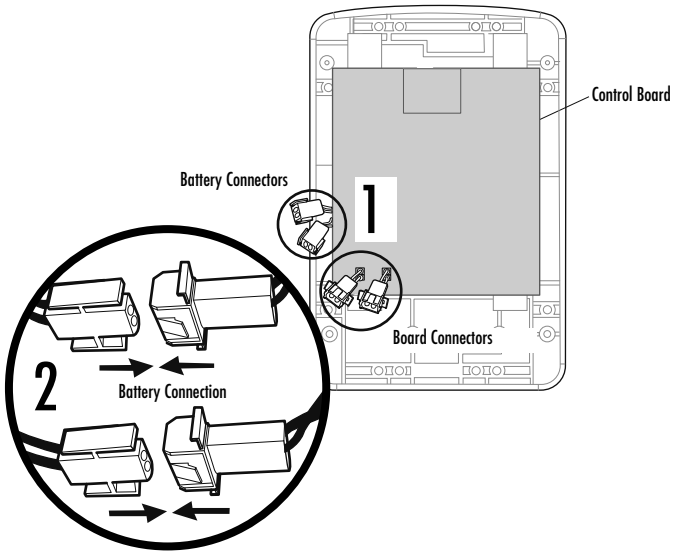

LIMITS

The limits are internal settings that indicate when the gates are in the fully open position and the fully closed position. For proper functionality, the limits must be programmed during the installation process. The programming uses a combination of buttons on the control board.

The specific buttons used for programming depends on which side of the gate the control box is mounted and how many operators the installation includes. Refer to pages 10 and 11 to determine if the gate is Left-handed or Right-handed.

If a mistake is made during programming press the **RESET** button on the outside of the control box to start over. The programming times-out automatically after 60 seconds of inactivity.

1 Close the gate.

2 Engage the operator by turning the release lever clockwise 180°, then turning the key clockwise 180°.

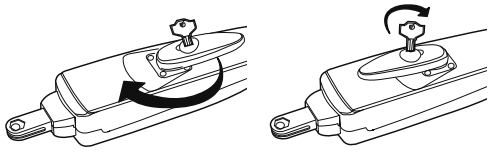

SINGLE ARM LEFT-HAND SIDE

PROGRAM OPEN

3 Press the **LEARN LIMITS** button (SET OPEN LIMIT LED will blink).

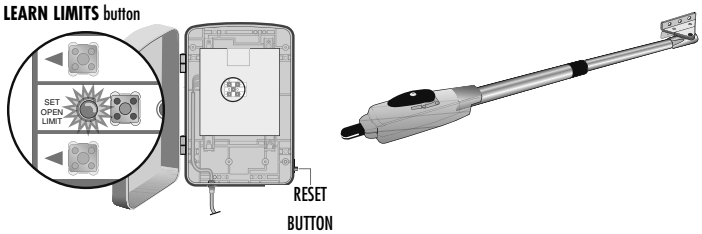

4 Press the **Gate 1** right button to move gate to the desired OPEN position.

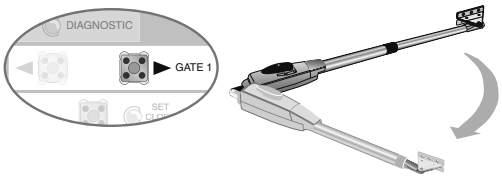

5 When gate is in the desired position, press the **LEARN LIMITS** button again. Control board will beep.

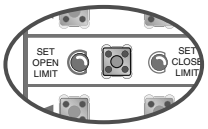

PROGRAM CLOSE

6 Press the **Gate 1** left button to move gate to the desired CLOSED position.

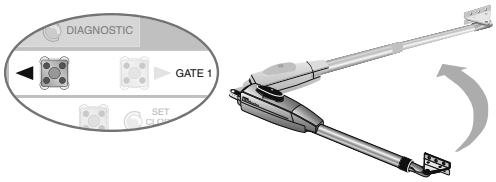

7 When gate is in the desired closed position, press the **LEARN LIMITS** button again.

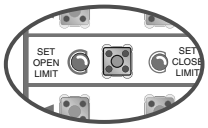

OR

SINGLE ARM RIGHT-HAND SIDE

PROGRAM OPEN

3 Press the **LEARN LIMITS** button (SET OPEN LIMIT LED will blink).

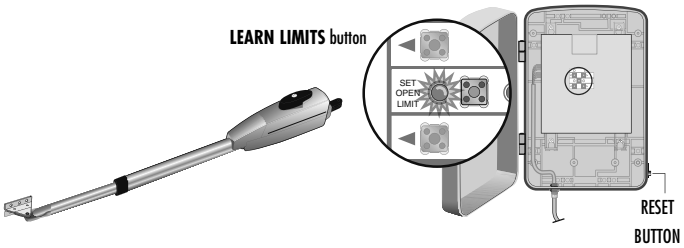

4 Press the **Gate 1** left button to move gate to the desired OPEN position.

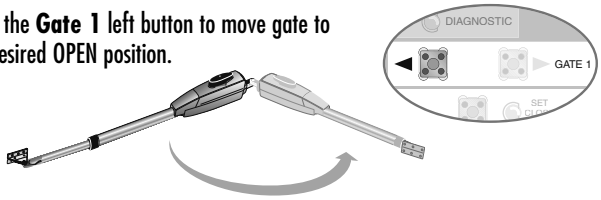

5 When gate is in the desired position, press the **LEARN LIMITS** button again. Control board will beep.

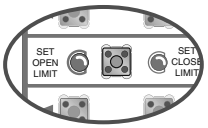

PROGRAM CLOSE

6 When the **SET CLOSE LIMIT** LED blinks, press the **Gate 1** right button.

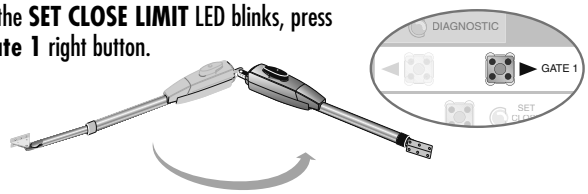

7 When gate is in the desired closed position, press the **LEARN LIMITS** button.

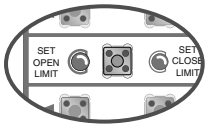

The control board beeps and the **SET OPEN LIMIT** and **SET CLOSE LIMIT** LEDs stop blinking, programming is now complete. (If the SET OPEN LIMIT LED continues to blink, repeat programming. If the problem continues, see Troubleshooting section.)

Test the limits by pressing the SBC to open and close the gate.

LIMITS

NOTES:

- *The gate with the longer travel span (opening) must be set as the primary gate (GATE 1).*
- *If one gate is overlapping the other, the gate that is overlapping must be connected to GATE 1 so it will start moving before the other gate; GATE 2 may need to be closed first if there is overlap or a gate lock is being used.*
- *The programming can be exited at any time by pressing the RESET button. Programming times-out automatically after 60 seconds of inactivity.*

DUAL GATE (LEFT-SIDE PRIMARY OPERATOR)

1 Close the gate.

2 Engage the operator by turning the release lever clockwise 180°, then turning the key clockwise 180°.

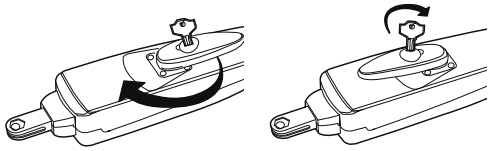

PROGRAM OPEN

3 Press the **LEARN LIMITS** button (SET OPEN LIMIT LED will blink).

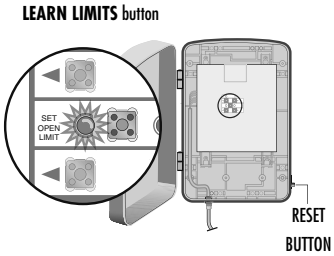

4 Press the **GATE 1** right button to open the left operator.

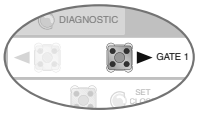

5 Press the **GATE 2** right button to move the right operator into the OPEN position.

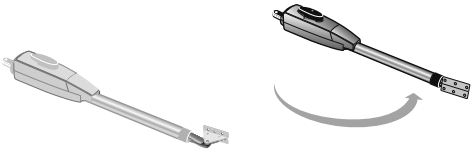

6 Press the LEARN LIMITS button. Control board will beep.

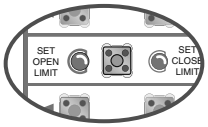

PROGRAM CLOSE

7 When the **SET CLOSE LIMITS** LED blinks, press the **GATE 2** left button to close the right operator.

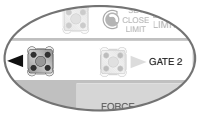

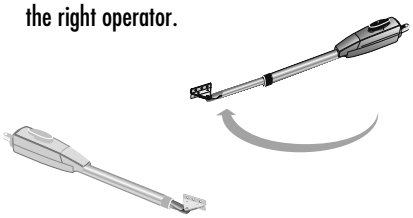

8 Press the **GATE 1** left button to close the left operator.

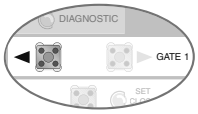

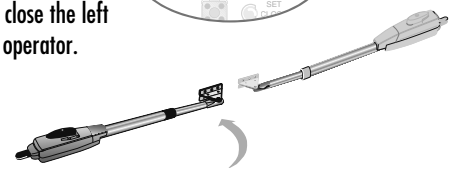

9 Press the **LEARN LIMITS** button.

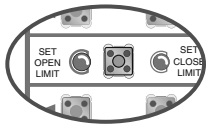

The control board beeps and the **SET OPEN LIMIT** and **SET CLOSE LIMIT** LEDs stop blinking, programming is now complete. (If the SET OPEN LIMIT LED continues to blink, repeat programming. If the problem continues, see Troubleshooting section.)

Test the limits by pressing the SBC to open and close the gate.

LIMITS

NOTES:

- *The gate with the longer travel span (opening) must be set as the primary gate (GATE 1).*
- *If one gate is overlapping the other, the gate that is overlapping must be connected to GATE 1 so it will start moving before the other gate; GATE 2 may need to be closed first if there is overlap or a gate lock is being used.*
- *The programming can be exited at any time by pressing the RESET button. Programming times-out automatically after 60 seconds of inactivity.*

DUAL GATE (RIGHT-SIDE PRIMARY OPERATOR)

1 Close the gate.

2 Engage the operator by turning the release lever clockwise 180°, then turning the key clockwise 180°.

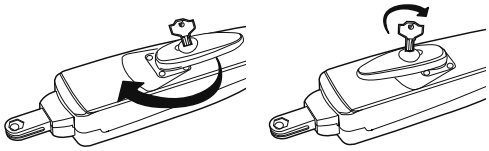

PROGRAM OPEN

3 Press the **LEARN LIMITS** button (SET OPEN LIMIT LED will blink).

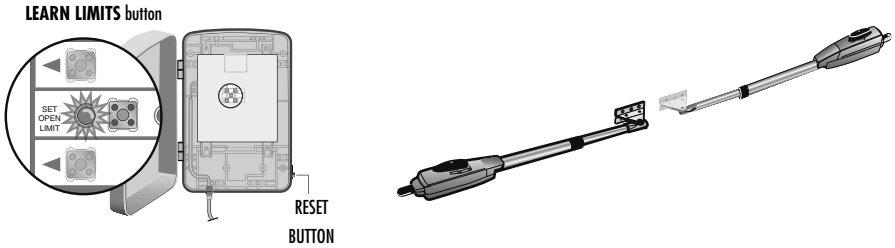

4 Press the **GATE 1** left button to open the right operator.

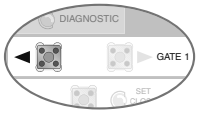

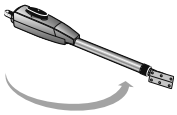

5 Press the **GATE 2** left button to move the left operator into the OPEN position.

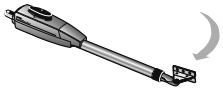

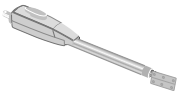

6 Press the LEARN LIMITS button. Control board will beep.

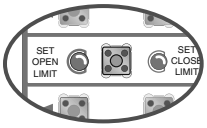

PROGRAM CLOSE

7 When the **SET CLOSE LIMITS** LED blinks, press the **GATE 2** right button to close the left operator.

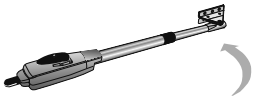

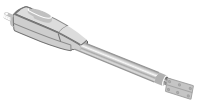

8 Press the **GATE 1** right button to close the right operator.

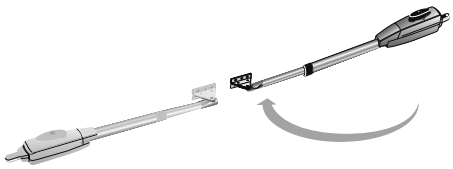

9 Press the **LEARN LIMITS** button.

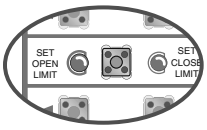

The control board beeps and the **SET OPEN LIMIT** and **SET CLOSE LIMIT** LEDs stop blinking, programming is now complete. (If the SET OPEN LIMIT LED continues to blink, repeat programming. If the problem continues, see Troubleshooting section.)

Test the limits by pressing the SBC to open and close the gate.

⚠ WARNING

Without a properly installed safety reversal system, persons (particularly small children) could be SERIOUSLY INJURED or KILLED by a closing gate.

- Too much force on gate will interfere with proper operation of safety reversal system.
- NEVER increase force beyond minimum amount required to close gate.
- NEVER use force adjustments to compensate for a binding or sticking gate.
- If one control (force or travel limits) is adjusted, the other control may also need adjustment.
- After ANY adjustments are made, the safety reversal system MUST be tested. Gate MUST reverse on contact with a rigid object.

FORCE ADJUSTMENT

The operator is equipped a with an obstruction current sensing feature. If the gate encounters an obstruction the operator will automatically reverse direction and stop. Based on the length and weight of the gate it may be necessary to make force adjustments. The force adjustment should be high enough that small objects such as branches or wind will not cause nuisance interruptions but low enough to prevent serious injury to a person or a vehicle.

TO ADJUST THE FORCE

1. Using the 3-button remote or the Single Button Control (SBC) button on the control board, open and then close the gate.
2. If the gate stops or reverses before reaching the fully open or closed position increase the force by turning the force control slightly.
3. Run operator through a complete cycle.
4. Test the force by making sure the gate will stop and reverse on contact with an obstruction.

NOTE: *Weather conditions can affect the gate movement, so seasonal adjustment may be required. The force control is factory set to the mid position.*

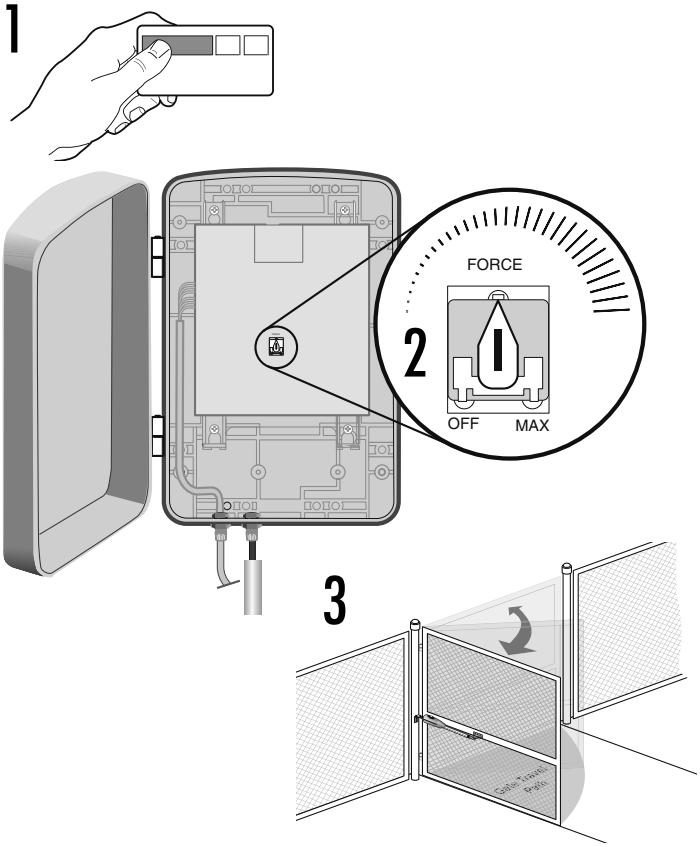

TIMER-TO-CLOSE (TTC)

The Timer-to-Close feature can be set to automatically close the gate after a specified time period. The TTC is factory set to OFF.

If the TTC is set to the OFF position, then the gate will remain open until the operator receives another command from a remote control or SBC. The gate must be fully open for the timer feature to activate and close the gate.

TO SET THE TIMER-TO-CLOSE:

1. Rotate the Timer-to-Close dial to the desired setting. The range is 0 to 180 seconds, 0 seconds is OFF. The "TIMER RUNNING LED" will flash once for every second of adjusted time.

NOTE: *Any radio command, SBC or CLOSE command on the control board prior to the TTC expiring will close the gate. The TTC is reset by any signals from the loops, close edges and close photoelectric sensors (IR's).*

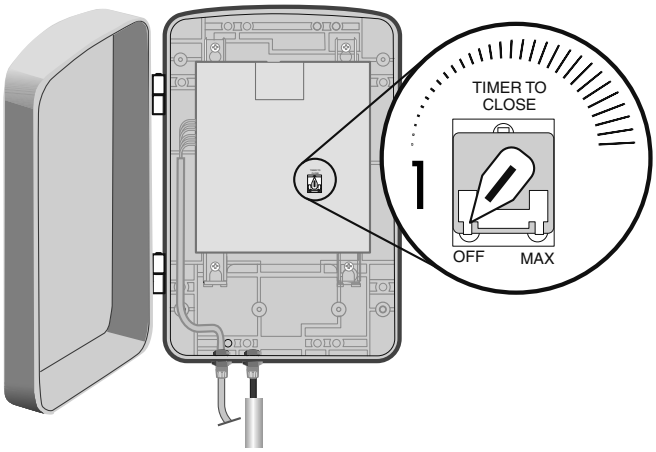

PROGRAMMING » REMOTE CONTROLS + KEYLESS ENTRY + ERASE ALL CODES + TEST

A combined total of 50 remote controls and keyless entry PINs can be programmed to the operator. For highest level of security, we recommend the Security+® line of products. Refer to Accessories.

TO ADD OR REPROGRAM A REMOTE CONTROL (NOT PROVIDED)

1 Press LEARN XMITTER button and release (LED will light up).

2 Press the remote control button. The LED will flash and the alarm output will activate twice.

To program additional remote controls, repeat steps until all remote controls are programmed.

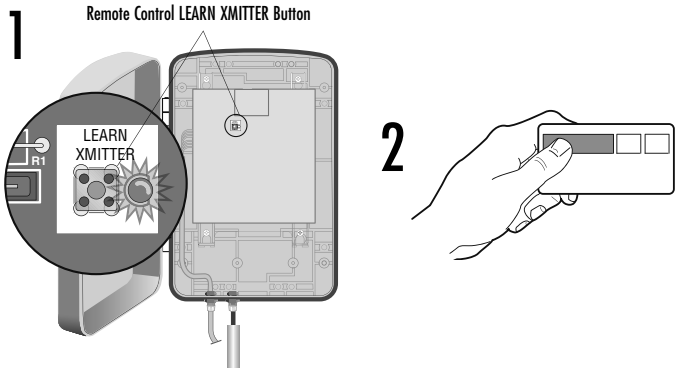

TO ADD A WIRELESS KEYLESS ENTRY (NOT PROVIDED)

1 Press LEARN XMITTER button and release (LED will light up).

2 Enter a 4-digit personal identification number (PIN) of your choice on the keypad.

3 Press the ENTER button on the keypad. The LED will flash and the alarm output will activate twice.

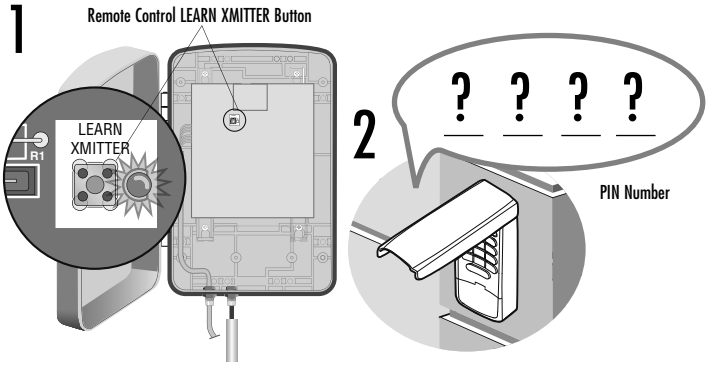

TO ERASE ALL CODES

1 Press and hold the LEARN XMITTER button on control board until the learn indicator light goes out (approximately 6 seconds). All previous codes are now erased.

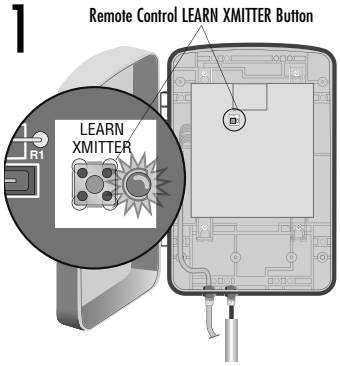

NOTICE: To comply with FCC and or Industry Canada (IC) rules, adjustment or modifications of this receiver and/or transmitter are prohibited, except for changing the code setting or replacing the battery. THERE ARE NO OTHER USER SERVICEABLE PARTS.

Tested to Comply with FCC Standards FOR HOME OR OFFICE USE. Operation is subject to the following two conditions: (1) this device may not cause harmful interference, and (2) this device must accept any interference received, including interference that may cause undesired operation.

TEST

After any adjustments are made, test the operator:

1 Use the Single Button Control (SBC) button to open and close the gate.

2 Test the limits by making sure the gate is stopping at the OPEN and CLOSE limits.

3 Test the force by making sure the gate will stop and reverse on contact with an obstruction.

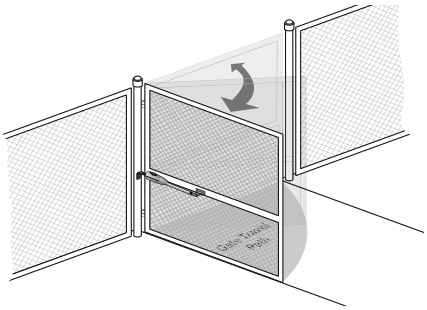

Make sure the rubber seal around the cover is intact and close the cover. Secure the control box cover with screws (4). Installation is complete.

RESET BUTTON

The reset button is located on the outside of the control box and serves several functions.

PROGRAMMING LIMITS RESET

If a mistake is made while programming the limits press the reset button to start over.

OPERATOR ALARM

The operator alarm will sound under the following condition: If gate encounters two consecutive obstructions, before reaching the open or close limit, the operator will stop, the alarm will sound (up to 5 minutes) and the control board will require resetting. No commands will operate the gate during this time. Reset the control board by pressing the reset button. After the operator is reset, normal functions will resume.

PARTY MODE (TIMER DEFEAT - HOLD OPEN)

When the Timer-to-Close feature is activated for normal daily operation and you wish to leave the gate(s) in the open position for any extended period of time you can activate the Party Mode.

To set Party Mode: Open the gate fully, then press the reset button. The next command given by remote control or SBC on the control board will close the gate and return the operator to normal operation.

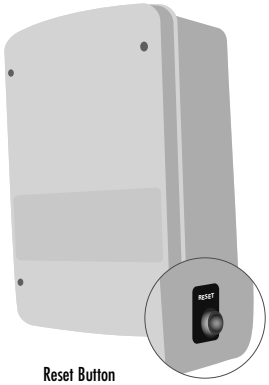

Reset Button

REMOTE CONTROL

Once the remote control has been programmed operator will operate as follows:

When gate is in the closed position, activation of the remote control button will open the gate. During the open cycle another activation of the remote control will stop the gate and the next activation of the remote control will close the gate.

When the gate is in the open position, activation of the remote control button will close the gate.

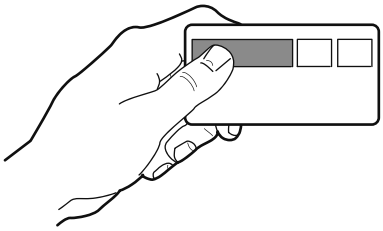

SLEEP MODE (BATTERY CONSERVATION)

The operator enters sleep mode 10 seconds after the last command is given. The diagnostic LED will blink in this mode. The photoelectric sensor indicator LEDs will not be on. The next command given will return the operator to normal operation.

MANUAL RELEASE

In case of a power failure, the operator can be disengaged from the gate. With an operator, the release action may sometimes feel stiff/jerky, which is normal and has no effect on function.

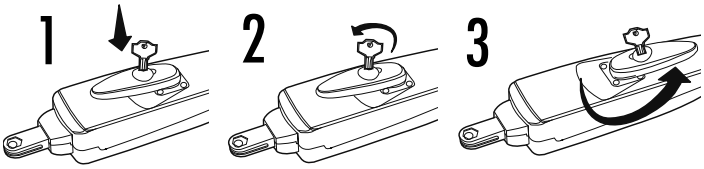

RELEASE

1 Insert the key into the lock.

2 Turn the key counter-clockwise 180°.

3 Turn the release lever counter-clockwise 180°.

Operator is in manual mode and the gate can be opened and closed manually.

ENGAGE

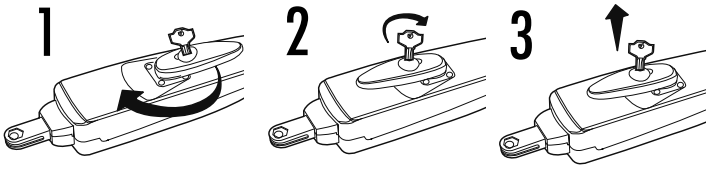

1 Turn the release lever clockwise 180°. This engages the motor.

2 Turn the key clockwise 180°. This locks the release lever.

3 Remove the key and store in a safe place.

The operator is now engaged.

MAINTENANCE

Disconnect power before servicing.

		CHECK AT LEAST ONCE EVERY		
DESCRIPTION	***TASK***	***MONTH***	***6 MONTHS***	***3 YEARS***
External Entrapment Protection System	Check and test for proper operation	X		
Manual Release	Check and test for proper operation		X	
Gate	Inspect for wear or damage	X		
Accessories	Check all for proper operation		X	
Electrical	Inspect all wire connections		X	
Mounting Hardware	Check for tightness		X	
Batteries	Replace			X
Operator	Inspect for wear or damage		X	
Warning Signs	Make sure they are present	X		

NOTES:

- *Severe or high cycle usage will require more frequent maintenance checks.*
- *Inspection and service should always be performed anytime a malfunction is observed or suspected.*
- *When servicing, please do some "house cleaning" of the operator and the area around the operator. Pick up any debris in the area. Clean the operator as needed.*
- *It is suggested that while at the site voltage readings be taken at the operator. Using a Digital Voltmeter, verify that the incoming voltage to the operator it is within ten percent of the operator's rating.*
- *See page 32 for instructions on how to adjust the gate force.*

⚠ WARNING

To protect against fire and electrocution:
- DISCONNECT power and battery BEFORE installing or servicing operator.

For continued protection against fire:
- Replace ONLY with fuse of same type and rating.

WIRING DIAGRAM

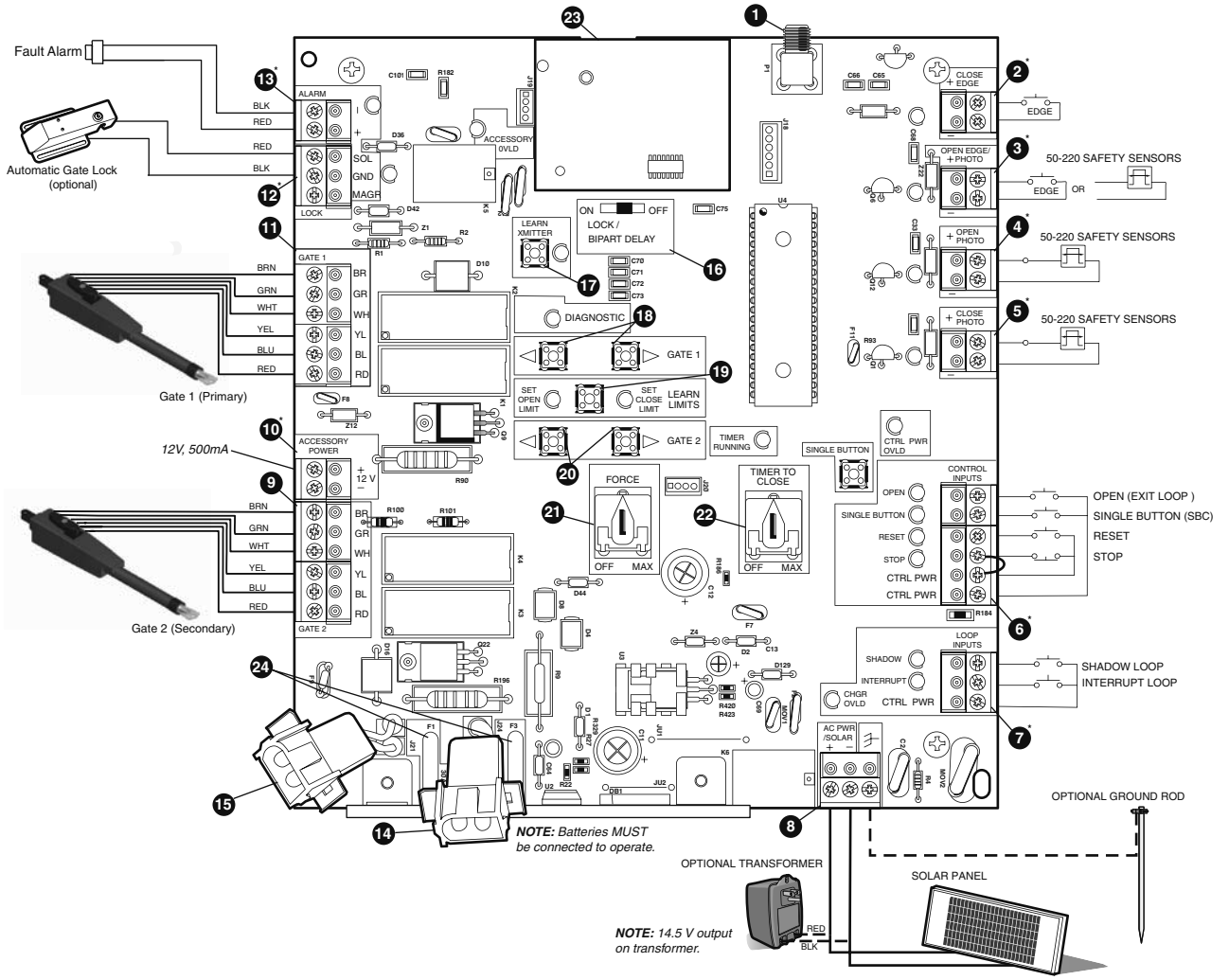

1. Antenna Input
2. Close Edge
3. Open Edge/Photo
4. Open Photo
5. Close Photo
6. Control Inputs
7. Loop Inputs
8. AC PWR/SOLAR
9. Gate 2
10. Accessory Power
11. Gate 1
12. Lock (Solenoid/Maglock) Output
13. Alarm Output
14. Battery 1 Connector
15. Battery 2 Connector
16. Lock/BiPart Delay
17. Learn Xmitter
18. Primary Gate Jog
19. Learn Limits
20. Secondary Gate Jog
21. Force
22. Timer To Close
23. Receiver Module
24. Fuses (20 Amp)

TROUBLESHOOTING » DIAGNOSTIC CHART

Your gate operator is programmed with self-diagnostic capabilities. The diagnostic LED will flash a number of times then pause signifying it has found a potential issue. Consult Diagnostic Chart below.

CONTINUOUS FLASHES (HEARTBEAT) POWER ON	Operator is in sleep mode. Normal Operation.
2 FLASHES STOP NOT CONNECTED	Stop is not connected. • Check to make sure the jumper wire is connected between the COM and STOP input on the control board. Stop is an NC (normally closed) input.
3 FLASHES LOW BATTERY VOLTAGE	Battery voltage is below the recommended operating level. • Battery may not be properly charged. Disconnect all batteries and make sure AC power or solar power is connected. Verify AC power outlet. • Verify that the battery fuses are intact and not blown. Replace blown fuses with same type and rating. • Batteries are no longer capable of holding a charge due to age or excessive depleting of the battery. Replace the batteries (see accessories page). Dispose of old batteries properly.
4 FLASHES LOW BATTERY CAPACITY	Battery does not have the capacity to operate the gate operator. • Battery may not be properly charged. Disconnect all batteries and make sure AC power or solar power is connected. Verify AC power outlet. • Verify that the battery fuses are intact and not blown. Replace blown fuses with same type and rating. • Batteries are no longer capable of holding a charge due to age or excessive depleting of the battery. Replace the batteries (see accessories page). Dispose of old batteries properly.
5 FLASHES RPM REVERSAL GATE 1 OR IN MANUAL RELEASE MODE. WIRING TO THE OPERATOR IS DISCONNECTED OR DAMAGED	Gate 1 has encountered an obstruction or the wiring to the arm is disconnected, damaged or miswired. • Make sure the path of the gate is clear and the gate moves freely. • Incorrect or bad connection to Gate 1 arm. Check the green and white wires on the motor arm to make sure connections are correct and secure. • Bad arm or control board.
6 FLASHES FORCE REVERSAL GATE 1	Gate 1 has encountered an obstruction. • Make sure the path of the gate is clear and the gate moves freely. • If there is no obstruction the force adjustment is set too low. Increase the force setting and verify that the gate moves without reversing and will reverse if an obstruction is encountered.
7 FLASHES RPM REVERSAL GATE 2 OR WIRING TO THE ARM IS DISCONNECTED OR DAMAGED	Gate 2 has encountered an obstruction or the wiring to the arm is disconnected, damaged or miswired. • Make sure the path of the gate is clear and the gate moves freely. • Incorrect or bad connection to Gate 2 arm. Check the green and white wires on the motor arm to make sure connections are correct and secure. • Bad arm or control board. Press the LEARN LIMITS button and press the GATE 2 buttons to move the arm. If the arm does not move continuously, disconnect arm from Gate 2 and connect the arm to the Gate 1 connector and repeat the attempt to move the arm. If the arm does not move continuously on either Gate 1 or 2, replace the arm.
8 FLASHES FORCE REVERSAL GATE 2	Gate 2 has encountered an obstruction. • Make sure the path of the gate is clear and the gate moves freely. • If there is no obstruction the force adjustment is set too low. Increase the force setting and verify that the gate moves without reversing and will reverse if an obstruction is encountered.
9-11 FLASHES POTENTIAL CHIP FAILURE	Potential RAM, Flash, or EEPROM failure. • Turn power off and on. • If problem is not resolved by turning the power off and on, replace the control board.

OPERATOR DOES NOT RUN. DIAGNOSTIC LED NOT ON.	• Power not connected. Make sure the AC/Solar input is connected and that at least one battery is connected with the corresponding fuse intact. • Low or defective battery. Check the battery to make sure that the red wire goes to the positive terminal of the battery and the black wire goes to the negative terminal of the battery. Replace the battery if the open circuit voltage is below 11.5 Vdc. • Bad control board. Replace control board.
OPERATOR POWERS UP BUT DOES NOT OPERATE.	• Low or defective battery. At least one charged battery must be connected for the operator to operate. Verify the battery fuse is intact. Check battery connections and battery voltage to be above 11.5 V. Replace batteries if necessary. • STOP button connection loose or disconnected. Press the RESET button and verify that the STOP LED lights up and then turns off after 10 seconds. Verify the wire connects between the STOP and CTRL PWR terminals. • Obstruction blocking photoelectric sensors. Press the RESET button and verify that all the safety LEDs (OPEN EDGE/PHOTO, OPEN PHOTO, CLOSE PHOTO) are OFF. If any are ON, clear any obstructions and verify the LED turns off. ***NOTE:*** *The RESET button may need to be hit multiple times since the LEDs turn off after 10 seconds when the operator goes to sleep.* • (Optional Accessory) Safety edge is damaged or on an obstruction. Press the RESET button and verify that the Safety LEDs (OPEN EDGE and CLOSE EDGE/PHOTO) are OFF. If either is ON, clear any obstructions and verify the LED turns off. ***NOTE:*** *The RESET button may need to be hit multiple times since the LEDs turn off after 10 seconds when the operator goes to sleep.* • (Optional Accessory) Interrupt loop or Shadow loop is obstructed. Press the RESET button and verify that the INTERRUPT and SHADOW LEDs are OFF. If either is on, check the loop detector and its wiring to insure that it is not incorrectly being triggered. • Bad control board. Replace control board.
RELAYS "CLICK" WHEN REMOTE CONTROL OR SINGLE BUTTON CONTROL (SBC) COMMAND IS GIVEN, BUT THE OPERATOR DOES NOT MOVE OR GATE DISCONNECTED.	• Battery not connected. At least one charged battery must be connected for the operator to operate. Verify battery fuse is intact. Check battery connections and battery voltage to be above 11.5 V. Replace batteries if necessary. • Arm cable loose or disconnected. Verify that all of the wires, especially the red and blue wires, going to the arm are secure and that the connector is properly mated to the header. • Arm is jammed or incorrectly installed. Disconnect the motor housing from the arm and verify that the arm moves freely. With the motor housing still disconnected, enter the Learn Limits mode and verify that the motor spins. Reconnect the motor housing to the arm and make sure that all 4 screws are securely tightened and that the motor seats correctly against the worm drive. Relearn limits for the operator. • Bad control board. Replace control board.
THE ARM MOVES BUT CANNOT EXIT LEARN LIMITS MODE. CANNOT LEARN LIMITS.	• Arm does not extend or contract enough during travel. The arm piston must extend and contract close to its full length to Learn Limits. Adjust the arm mounting so that this can be achieved. • Motor cable wire not connected. Make sure that all the motor wires are connected properly. • Motor housing is not properly seated. Make sure that the motor housing for the arm(s) is properly seated so there are no gaps between the motor housing and arm assembly. Make sure all 4 screws are tightened.
GATE DOES NOT FULLY OPEN OR CLOSE WHEN TRYING TO LEARN LIMITS.	• Over extending or contracting arm. Disconnect the motor housing from the arm and make sure that the arm moves freely throughout the full length of travel. Adjust arm mounting and positioning if necessary. • Arm is interfering with the gate mount bracket. Examine the hinge point where the arm mounts to the gate post. Make sure that the arm housing does not hit or interfere with the gate post or mounting bracket throughout the full length of travel. Adjust the arm mounting and positioning if necessary. • Gate is excessively heavy or hinges are bad. Verify that the gate is within the ratings for this product. Disconnect the arms and verify that both gates swing easily. Lubricate or replace hinges as necessary.
OPERATOR DOES NOT RESPOND TO SINGLE BUTTON (SBC) COMMAND.	• Battery not connected. At least one charged battery must be connected for the operator to operate. Verify the battery fuse is intact. Check battery connections and battery voltage to be above 11.5 V. Replace batteries if necessary. • STOP button connection loose or disconnected. Press the RESET button and verify that the STOP LED lights up and then turns off after 10 seconds. Verify the wire connects between STOP and CTRL PWR terminals. • Single Button Control (SBC) button connection loose. Check wiring for SBC button. Use the on-board single button to verify operator will respond. • Bad control board. Replace control board.
OPERATOR DOES NOT RESPOND TO REMOTE CONTROL COMMAND.	• Battery not connected. At least one charged battery must be connected for the operator to operate. Verify battery fuse is intact. Check battery connections and battery voltage to be above 11.5 V. Replace batteries if necessary. • STOP button connection loose or disconnected. Press the RESET button and verify that the STOP LED lights up and then turns off after 10 seconds. Verify the wire connects between the STOP and CTRL PWR terminals. • Radio module not plugged in. Verify the green Radio module (located next to the coaxial connector) is properly mated with both 4-pin connectors.

OPERATOR DOES NOT RESPOND TO REMOTE CONTROL COMMAND.	• Antenna not connected. Verify the antenna and coaxial cable are properly connected to the control board. • Remote control not learned. Refer to Programming Remote Control section. • Bad control board. Replace control board.
GATE STOPS AND REVERSES IMMEDIATELY AFTER IT STARTS MOVING.	• Obstruction sensed. Check safety devices and gate for obstructions. • A fault has occurred. Check Diagnostic LED for possible error codes. • Force set too low. Adjust FORCE setting until gate completes a full open/close cycle without reversing. The force setting may need to be adjusted in cold weather, as the gate will not move freely. • Loops are reversed. Make sure that the Safety loop and Shadow loop are connected properly. The gate may trigger the Shadow loop as it moves, so it must be connected to the correct input. • Low or defective battery. At least one charged battery must be connected for the operator to operate. Verify battery fuse is intact. Check battery connections and battery voltage to be above 11.5 V. Replace batteries if necessary.
GATE OPENS BUT DOES NOT CLOSE.	• An open input is continuously activated. Check the open loop or vehicle probe to make sure they are clear of objects. Verify connections and operation for these devices. • Low battery. Measure the voltage across the battery. Voltage should be above 11.5 Vdc. Replace battery if required. • (Optional Accessory) Entry system output is connected to the OPEN input, and is “stuck” opening. Verify entry system connections and operations. • Obstruction blocking close photoelectric sensors, shadow loop, or safety loop. Check photoelectric sensor for alignment and verify all connections and operation for safety devices. • (Optional Accessory) Close safety edge is damaged or on an obstruction. Verify operation and connection of close edge.
GATE DOES NOT CLOSE AUTOMATICALLY WITH TIMER TO CLOSE ENABLED.	• Verify that the Timer-to-Close is ON and adjusted to desired delay. • Gate opened by a force obstruction reversal. Check the Diagnostic LED and clear gate path of any obstructions. • The Interrupt loop or Shadow loop is obstructed (optional accessories). • Obstructed close photoelectric sensor or safety edge (optional accessory). Check connections and operations of safety devices. • Low battery. Measure the voltage across the battery. Voltage should be above 11.5 Vdc. Replace battery if necessary. • An open input is continuously activated. Check the open loop or vehicle probe to make sure they are clear of objects. Verify connections and operation for these devices. • (Optional Accessory) Entry system output is connected to the OPEN input, and is “stuck” opening. Verify entry system connections and operation. • Operator in “Party” mode after RESET button pressed while at the OPEN limit. Use a remote control or the SBC to close the gate and reopen it. Verify that the TIMER RUNNING LED is flashing.
ALARM CONSTANTLY SOUNDS 5 MINUTES. SOUNDS WHENEVER A COMMAND IS ISSUED.	• Double entrapment occurred. Two successive obstructions were encountered while moving the gate. Press the RESET button and ensure that the gate path is clear of all obstructions. Check the FORCE setting to make sure it is properly set.
ALARM IS BEEPING 3 TIMES ON A COMMAND	• Low battery. Measure the voltage across the battery. Voltage should be above 11.5 Vdc. Replace battery if required.
GATE RUNS TOO SLOW	• Open and Close Limits are set too close together. If the Open and Close Limits are set within the ramp down distance of each other, the gate will run at slow speed all the time. • The gate is starting within the ramp down distance from the Open or Close Limit. Gate will run slow to limits if motion is started within the ramp-down distance from the limit.
GATE 2 CLOSES BEFORE GATE 1.	• Lock/Bipart Delay not set. Slide the Lock/Bipart Delay switch to ON. Verify that Gate 1 starts moving first on open and last on close. • Gate is excessively heavy or hinges are bad. Verify that the gate is within the ratings for this product. Disconnect the arms and verify that both gates swing easily. Lubricate or replace hinges as necessary. • Gate is unbalanced. Disconnect the arms and verify that both gates swing easily in both directions. If the gates are harder to move in one direction verses the other, the gate is not properly balanced and the hinges must be adjusted. • Bad motor connection. Check the motor wires and connections for possible loose or corroded terminals.
ALARM BEEPS WHEN RUNNING.	• Low battery. Measure the voltage across the battery. Voltage should be above 11.5 Vdc. Replace battery if required.

CONTROL BOX

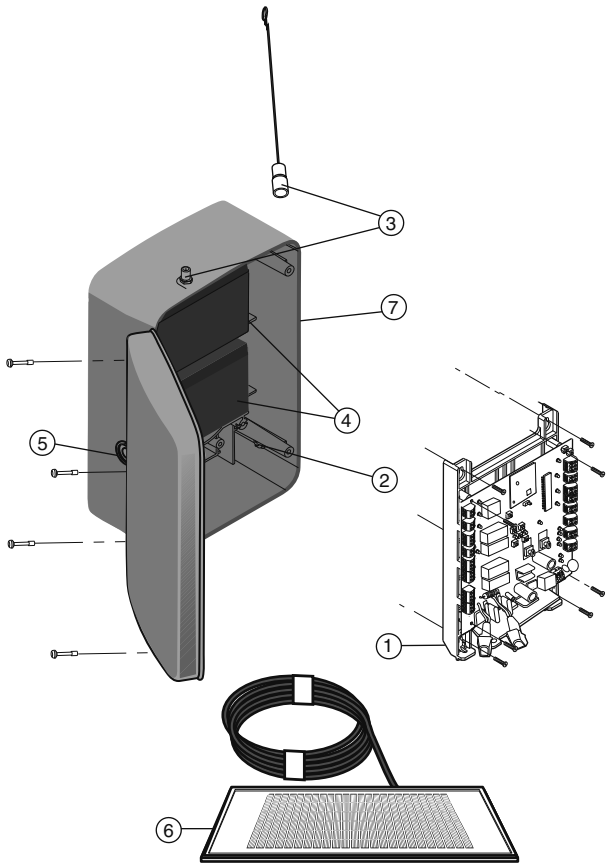

Refer to the parts lists below for replacement parts available for your operator. If optional modifications and/or accessories are included with your operator, certain components may be added or removed from these lists.

ITEM	PART #	DESCRIPTION	QTY
1	K1A6426-1	Control Board with Mounting Bracket	1
2	K23-19380	Reset Switch	1
3	K74-34392	Antenna	1
4	29-NP712	Battery	1
5	K76-19446	Alarm	1
6	SOLPNL10W12V	Solar Panel	
		Not Shown	
	LA412-CONT	Complete Control Box	
	K1A6636	Receiver Module - 315 MHz	
	K1A6636-1	Receiver Module - 390 MHz (optional)	
	K76-35600	Reset Switch (XLM Control Box)	
	K76-35364	Alarm (XLM Control Box)	

NOTE: *The fuse is a standard 20 Amp fuse that is available from your local automotive store.*

GATE OPERATOR ARM

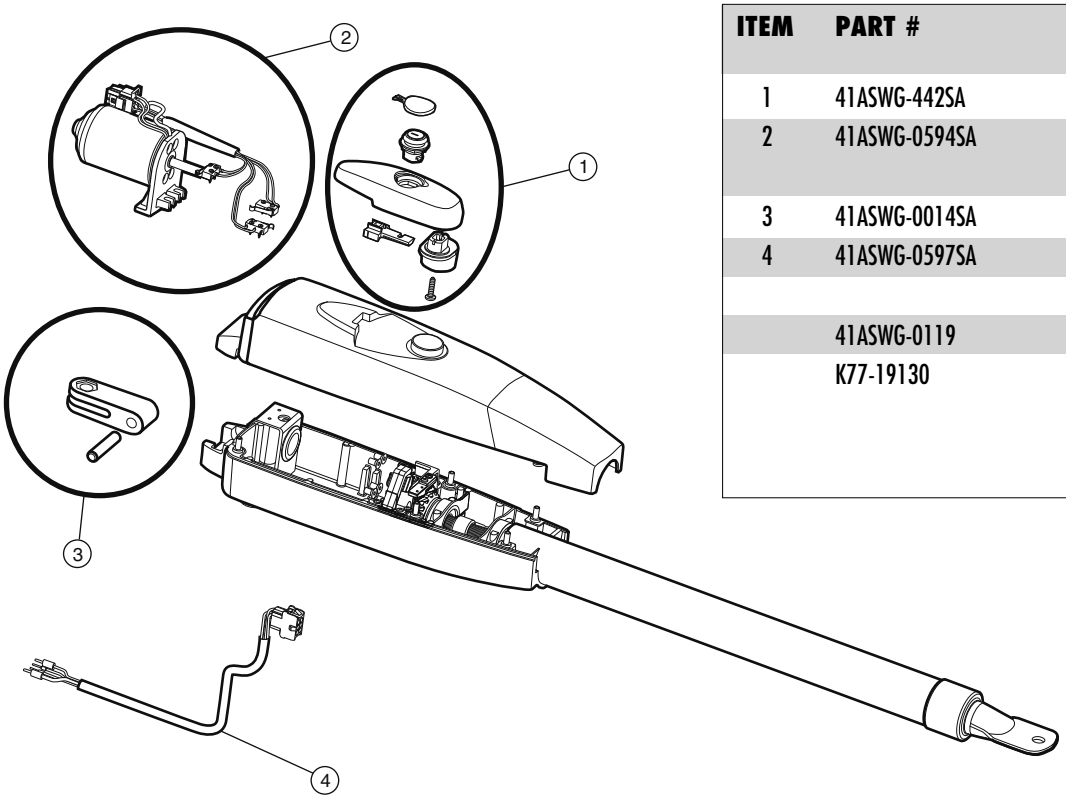

ITEM	PART #	DESCRIPTION	QTY
1	41ASWG-442SA	Release Lever	1
2	41ASWG-0594SA	Motor with Limit Switch Harness	1
3	41ASWG-0014SA	Rear Connector	1
4	41ASWG-0597SA	Cable 12 V with Connector	1
		Not Shown	
	41ASWG-0119	Release Key	1
	K77-19130	Hardware Bag Complete with: Gate bracket, post bracket, pull-to-open bracket and hardware	

HOW TO ORDER REPAIR PARTS

OUR LARGE SERVICE ORGANIZATION
SPANS AMERICA

FOR INSTALLATION AND SERVICE INFORMATION,
CALL OUR TOLL FREE NUMBER

1-800-528-2806

www.liftmaster.com

WHEN ORDERING REPAIR PARTS
PLEASE SUPPLY THE FOLLOWING INFORMATION:
PART NUMBER DESCRIPTION MODEL NUMBER
ADDRESS ORDER TO:

THE CHAMBERLAIN GROUP, INC.
Technical Support Group
6050 S. Country Club Road
Tucson, AZ 85706

WARRANTY POLICY

LIFTMASTER TWO YEAR LIMITED WARRANTY

The Chamberlain Group, Inc. warrants to the first purchaser of this product, for the structure in which this product is originally installed, that it is free from defect in materials and/or workmanship for a period of TWO years from the date of purchase. The proper operation of this product is dependent on your compliance with the instructions regarding installation, operation, maintenance and testing. Failure to comply strictly with those instructions will void this limited warranty in its entirety.

If, during the limited warranty period, this product appears to contain a defect covered by this limited warranty, call 1-800-528-2806, toll free, before dismantling this product. Then send this product, pre-paid and insured, to our service center for warranty repair. You will be advised of shipping instructions when you call. Please include a brief description of the problem and a dated proof-of purchase receipt with any product returned for warranty repair. Products returned to Seller for warranty repair, which upon receipt by Seller are confirmed to be defective and covered by this limited warranty, will be repaired or replaced (at Seller's sole option) at no cost to you and returned pre-paid. Defective parts will be repaired or replaced with new or factory-rebuilt parts at Seller's sole option.

ALL IMPLIED WARRANTIES FOR THE PRODUCT, INCLUDING BUT NOT LIMITED TO ANY IMPLIED WARRANTIES OF MERCHANTABILITY AND FITNESS FOR A PARTICULAR PURPOSE, ARE LIMITED IN DURATION TO THE TWO YEAR LIMITED WARRANTY PERIOD SET FORTH ABOVE, AND NO IMPLIED WARRANTIES WILL EXIST OR APPLY AFTER SUCH PERIOD. Some states do not allow limitations on how long an implied warranty lasts, so the above limitation may not apply to you. **THIS LIMITED WARRANTY DOES NOT COVER NON-DEFECT DAMAGE, DAMAGE CAUSED BY IMPROPER INSTALLATION, OPERATION OR CARE (INCLUDING, BUT NOT LIMITED TO ABUSE, MISUSE, FAILURE TO PROVIDE REASONABLE AND NECESSARY MAINTENANCE, UNAUTHORIZED REPAIRS OR ANY ALTERATIONS TO THIS PRODUCT), LABOR CHARGES FOR REINSTALLING A REPAIRED OR REPLACED UNIT, OR REPLACEMENT OF BATTERIES.**

THIS LIMITED WARRANTY DOES NOT COVER ANY PROBLEMS WITH, OR RELATING TO, THE GATE OR GATE HARDWARE, INCLUDING BUT NOT LIMITED TO THE GATE SPRINGS, GATE ROLLERS, GATE ALIGNMENT OR HINGES. THIS LIMITED WARRANTY ALSO DOES NOT COVER ANY PROBLEMS CAUSED BY INTERFERENCE. ANY SERVICE CALL THAT DETERMINES THE PROBLEM HAS BEEN CAUSED BY ANY OF THESE ITEMS COULD RESULT IN A FEE TO YOU.

UNDER NO CIRCUMSTANCES SHALL SELLER BE LIABLE FOR CONSEQUENTIAL, INCIDENTAL OR SPECIAL DAMAGES ARISING IN CONNECTION WITH USE, OR INABILITY TO USE, THIS PRODUCT. IN NO EVENT SHALL SELLER'S LIABILITY FOR BREACH OF WARRANTY, BREACH OF CONTRACT, NEGLIGENCE OR STRICT LIABILITY EXCEED THE COST OF THE PRODUCT COVERED HEREBY. NO PERSON IS AUTHORIZED TO ASSUME FOR US ANY OTHER LIABILITY IN CONNECTION WITH THE SALE OF THIS PRODUCT.

Some states do not allow the exclusion or limitation of consequential, incidental or special damages, so the above limitation or exclusion may not apply to you. This limited warranty gives you specific legal rights, and you may also have other rights which vary from state to state.

ACCESSORIES

373LM

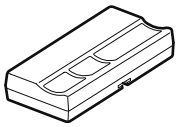

3-Button SECURITY✚® Remote Control:

Includes visor clip.

50-220

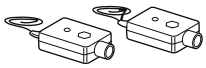

Protector System® Photoelectric Sensors:

The photoelectric sensors are recommended for installation with the operators covered in this manual.

SGLOCK12V

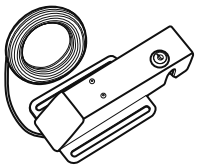

Automatic Gate Lock:

Solenoid-driven lock that automatically unlocks when gate is open and locks when gate is closed. Can be mounted onto gate or post. Can be released in case of emergency.

SOLPNL10W12V

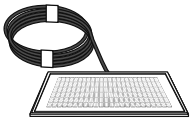

10 Watt Solar Kit:

This kit is to replace or add a Solar Panel to the operator system. Up to three Solar Panels can be connected to the gate operator.

WGB315

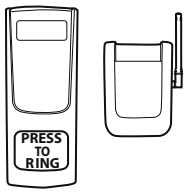

Wireless Gate Doorbell:

Allows guests to ring a doorbell in the house from the keypad.

Homeowner can open gate from inside the home using the included remote control button. No wiring required. Keypad can be programmed to allow access to selected guests using a 4-digit code.

377LM

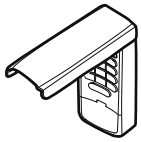

SECURITY✚® Keyless Entry:

Enables homeowner to operate gate operator from outside by entering a 4-digit code on a specially designed keypad.

370LM

3-Button Mini-Remote Control with SECURITY✚®:

With key ring and fastening strip.

GPINLCK

Gate Arm Pin Lock:

The pin lock kit is designed to prevent disconnection of the gate operator and the gate while providing a means to open the gate in case of power failure.

LM202

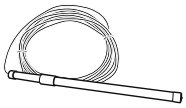

Vehicle Exit Sensor:

One piece outdoor buried vehicle motion detector with sensing probe is housed in a small relay type housing so it is easy to integrate with gate, providing for free exit only.

50-19503

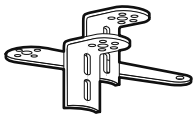

Push-To-Open Bracket:

Used to allow the gate operator to push the gate open.

29-NP712

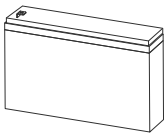

7 AH/12 Vdc Gate Access System Battery:

The gate access system battery is designed to add a battery for solar applications or as a replacement battery. The model LA412 is designed to use two 7AH batteries or one 33AH battery (see below).

A12330SGLPK

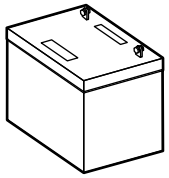

33 AH/12 Vdc Gate Access System Battery:

The battery is for use with operators utilizing the XLM control box. For increased operating cycles during periods of reduced sunlight and colder weather. Do not use 33 AH battery in combination with 7 AH battery.

LA12VXFMR

Transformer:

The transformer may be used to charge the gate operator battery in place of the solar panel(s).

To order visit www.liftmaster.com

TEMPLATE FOR POST BRACKET MOUNTING

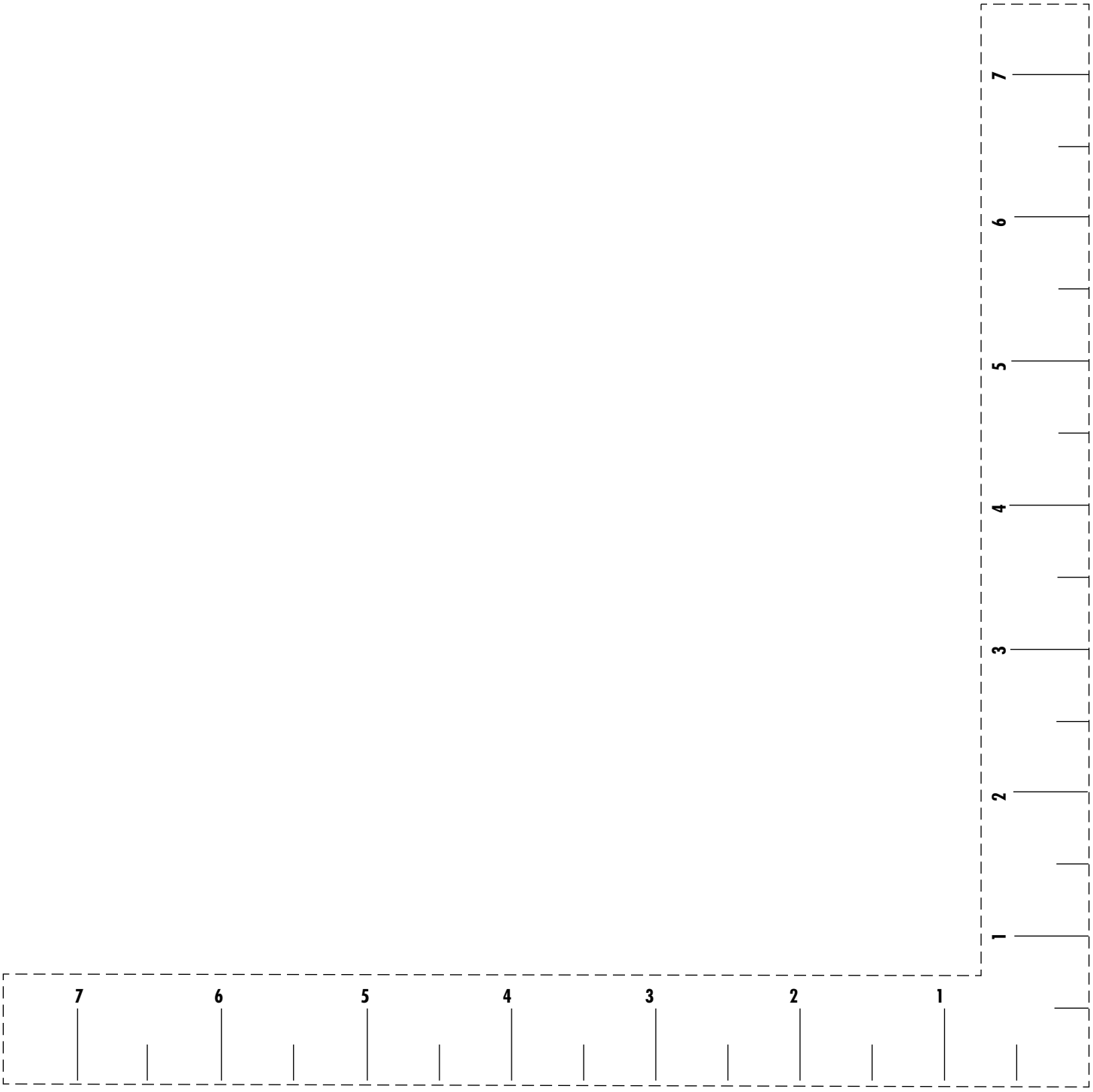

© 2010, The Chamberlain Group, Inc.
All Rights Reserved