CHAMBERLAIN®

LiftMaster®

Instruction Manual

MODEL HCT

HIGH TRAFFIC COMMERCIAL DOOR AND GATE OPERATOR

C UL US

installation instructions and manual book
for architects, general contractors and dealers

copyright © 2005 The Chamberlain Group, Inc. - www.chamberlain.com

ELITE™

TABLE OF CONTENTS

Role of Specifiers and Designers		2
Role of Dealers, Installers and Trained System Technicians		2
Role of End Users / Home Owners		3
Overhead Gate / Door Systems		3
Safety Installation Instructions		4
UL Gate Classifications		5
Steps 1-2	*Installation of Operator*	6
Steps 3-5	*Mounting the Operator*	7
Step 6	*How to Connect Power (115 Vac)* ***Earth Ground Rod***	8
Step 7	*Adjusting the Traveling Distance (Limit Switches)*	9
Step 8	*Two Way Adjustable Reversing Sensor*	10
Step 9	*Adjustable Timer*	10
Step 10	*Terminal Input Connections*	11
Steps 11-12	***CAUTION! IMPORTANT!*** *See This Page*	12
Solenoid / Maglock J3 Connection		13
Operating Instructions for Optional Systems		14
Three Push Button System		14
House Alarm / Proximity Switch Connection		15
Solenoid / Maglock Optional Board Connection		16
Stop Button Alarm Shut Off		17
Optional Relay Adapter Connection		18
Secondary Entrapment Protection (Contact Sensor)		19
Secondary Entrapment Protection (Non-Contact Sensor)		20
Optional Plug-In Loop Detectors		21
Secondary Entrapment Prevention		21
HCT Loop Size and Placement		22
Loop Installation and Number of Wire Turns		23
Wiring External Loop Detectors		24
Programming the Radio Receiver		25-26
Replace the Control Board		27
Audio Alarm		28
Important Safety Instructions		29
EMERGENCY RELEASE		***29***
Troubleshooting Table		30
Troubleshooting / LED Information		31
Property Owner's Checklist of Installation		***32***
HCT Parts Illustrations		33
HCT Accessories		34
List of HCT Parts / Maintenance		35

Important: ***DO NOT*** attempt repair or service of your commercial door and gate operator unless you are an Authorized Service Technician.

© Copyright 1988-2004 by Chamberlain Professional Products
All rights reserved. No part of this manual may be reproduced in any means; graphic, electronic, mechanical, or photocopied without the express written permission of the publisher of this material.

For Toll Free Technical Support: **1-800-528-2806**

ROLE OF SPECIFIERS AND DESIGNERS

Specifiers and designers should design an automatic vehicular gate system or commercial door opener to:

- Incorporate UL325 compliant equipment.
- Utilize an operator suited for system type, size, frequency of use, location and user population. (For gates refer to UL325 for usage class definitions.)
- Separate pedestrian access from vehicle access.
- Reduce or eliminate pinch points.
- Reduce risk of entrapment injuries by minimizing all gaps in the gate/door and enclosing the area of the travel of the gate/door.
- Secure controls from unauthorized use.
- Locate all controls out of reach from the gate/door.
- Allow the user full view of the gate/door when operating.
- Consider special populations, such as children or the elderly.
- Prominently display all warnings and instructions.
- Be consistent with DASMA's Automatic Gate Opener System Safety Guide.

ROLE OF DEALERS, INSTALLERS AND TRAINED SYSTEM TECHNICIANS

Installers, during the course of the installation steps for each job, should:

- Confirm that the operator being installed is appropriate for the application.
- Confirm that the gate/door is designed and built according to current published industry standards.
- Confirm that all appropriate features and accessory devices are being incorporated, including both primary and secondary entrapment protection devices.
- Make sure that the gate/door works freely before installing the operator.
- Repair or service worn or damaged hardware before installing the operator.
- Adjust the operator clutch or load-sensing device to the minimum force setting that allows reliable operation.
- Install operator inside fence line. (DO NOT install operator on public side of fence line.)
- Install a proper electrical ground to the operator.
- Install keypad controls where users cannot touch, or reach through gate while operating controls.
- Install controls where user has full view of operation.
- Install all warning signs (In accordance with UL325) on both sides of the gate to warn persons in the area of potential hazards associated with automatic vehicular gate operation.
- Test all features for proper functions before placing the automatic vehicular system into service.
- Demonstrate the basic functions and safety features of the system to owners/end users/general contractors, including how to turn off power and how to operate the manual disconnect feature.
- Leave safety instructions, product literature, installation manual and maintenance manual with end user.
- Explain to the owners the importance of a service/maintenance contract that includes a routine re-testing of the entire system including the entrapment protection devices, and explain the need for the owners to insure that this testing is performed routinely.
- Offer the owner/end user a maintenance contract, or contact them regularly to offer maintenance.

ROLE OF END USERS/HOME OWNER

End users should be made aware that they must:

- Contact a trained system technician to maintain and repair the system. (End users should never attempt to repair the system.)
- Retain and utilize the installation/maintenance manual and safety instructions.
- Routinely check of all operator functions and gate/door movement.
- Discontinue use if safety systems operate improperly, the gate/door is damaged, or the gate/door is difficult to move.
- Never over tighten the operator clutch of load sensing device to compensate for a damaged or stiff operating system.
- Prominently display and maintain warning signs on both sides of the gate/door.
- Keep all obstructions clear of the vicinity of the path of the system.
- Actively discourage pedestrian use of the vehicular operating system.
- Prevent anyone from playing near any part of the system.
- Never allow anyone to climb under, over or through a gate or the adjacent fence area.
- Never allow children to operate system.
- Keep portable controls out of reach of children.
- Never allow anyone to install an operating control within reach of the gate/door.
- Always be certain that the area is clear of pedestrians before operating the system.

OVERHEAD GATE/DOOR SYSTEMS

- Gate/Door - A moving barrier such as a swinging, sliding, raising lowering, rolling, or like, barrier, that is a stand-alone passage barrier or is that portion of a wall or fence system that controls entrance and/or egress by persons or vehicles and completes the perimeter of a defined area.

- Vehicular Vertical Pivot-Gate/Door Operator (or System) - A vehicular gate/door operator (or system) that controls a gate/door that moves in an arc in a vertical plane that is intended for use for vehicular entrances or exits to a drive, parking lot, or the like.

- Entrapment Zone Hazard - Body parts may become entrapped between a gate/door and a stationary object when the gate/door begins to move, which can result in serious injury or death. Pedestrians must stay clear of the gate/door path, and any area where gate/door motion is close to stationary objects.

- Pinch Points Hazard - The opening mechanism may have arms that can overlap with a scissoring effect, which can result in serious injury. Pedestrians must stay clear of the opening mechanism at all times, particularly when gate/door is opening.

- Be sure that warning signs are prominently displayed on both sides of the gate/door and any other place where danger exists.

SAFETY INSTALLATION INSTRUCTIONS

1) Install the operator only when:

- **A)** The operator is appropriate for the construction and the usage class of the gate/door.
- **B)** All exposed pinch points are eliminated or guarded.

2) The operator is intended for installation only on gate/doors used for vehicles. Pedestrians must be supplied with a separate access opening.

3) The gate/door must be installed in a location so that enough clearance is supplied between the gate/door and adjacent structures when opening and closing to reduce the risk of entrapment. Swinging gates shall not open into public access areas.

4) The gate/door must be properly installed and work freely in both directions prior to the installation of the operator. Do not over-tighten the operator clutch to compensate for a damaged or improperly installed gate/door.

5) Controls must be far enough from the gate/door so that the user is prevented from coming in contact with the gate/door while operating the controls. Controls intended to be used to reset an operator after 2 sequential activations of the entrapment protection device or devices must be located in the line of sight of the outdoor gate/door or easily accessible controls shall have a security feature to prevent unauthorized use.

6) All warning signs and placards must be installed where visible in the area of the gate/door. A minimum of two placards must be installed.

7) For an operator utilizing a non-contact sensor such as a photo beam:

- **A)** See instructions on the placement of non-contact sensor for each type of application.
- **B)** Care shall be exercised to reduce the risk of nuisance tripping, such as when a vehicle trips the sensor while the gate/door is still moving.
- **C)** One or more non-contact sensors shall be located where the risk of entrapment or obstruction exists, such as the perimeter reachable by a moving gate/door or barrier.

8) For an operator utilizing a contact sensor such as an edge sensor:

- **A)** One or more contact sensors shall be located at the bottom edge of a vehicular vertical lift gate/door.
- **B)** One or more contact sensors shall be located at the pinch point of a vehicular vertical pivot gate/door.
- **C)** A hard-wired contact sensor shall be located and its wiring arranged so that the communication between the sensor and the operator is not subjected to mechanical damage.
- **D)** A wireless contact sensor such as the one that transmits radio frequency (RF) signals to the operator for entrapment protection functions shall be located where the transmission of the signals are not obstructed or impeded by building structures, natural landscaping or similar obstruction. A wireless contact sensor shall function under the intended end-use conditions.

UL GATE CLASSIFICATIONS

Class I – Residential vehicular gate operator
A vehicular gate operator (or system) intended for use in a home of one-to four single family dwelling, or a garage or parking area associated therewith.

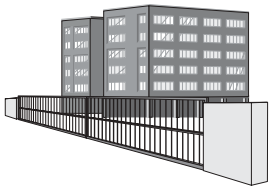

Class II – Commercial/General access vehicular gate operator
A vehicular gate operator (or system) intended for use in a commercial location or building such as a multi-family housing unit (five or more single family units) hotel, garages, retail store or other building servicing the general public.

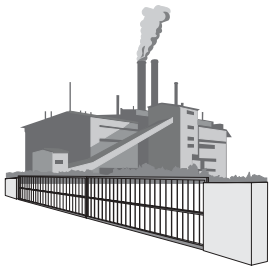

Class III – Industrial/Limited access vehicular gate operator
A vehicular gate operator (or system) intended for use in a industrial location or building such as a factory or loading dock area or other locations not intended to service the general public.

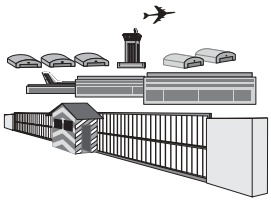

Class IV – Restricted access vehicular gate operator
A vehicular gate operator (or system) intended for use in a guarded industrial location or building such as an airport security area or other restricted access locations not servicing the general public, in which unauthorized access is prevented via supervision by security personnel.

INSTALLATION OF OPERATOR

Make sure the hardware springs are balanced and the gate/door opens and closes smoothly.

STEP 1 With the gate/door closed, mark the center of the gate/door.

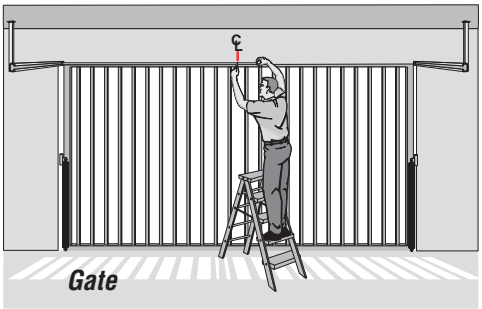

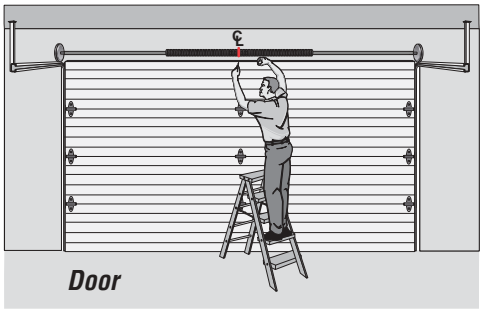

STEP 2 Open the gate/door and mark the center point of the gate/door on the ceiling.

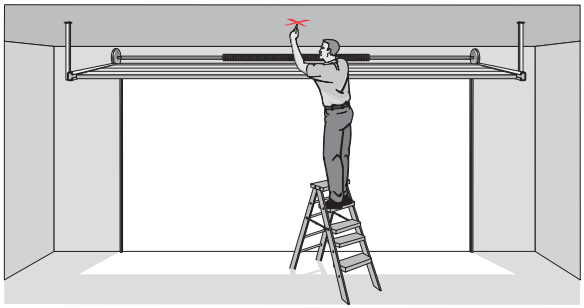

STEP 3 Make sure the header bracket is in the center of the opening. Bolt or weld the end of the track (header bracket) to wall.

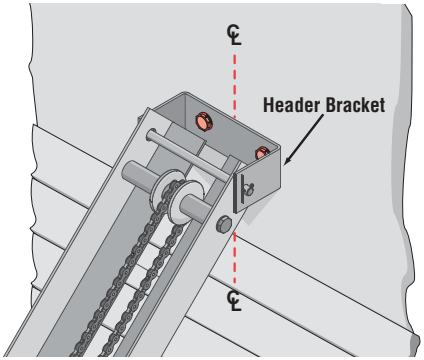

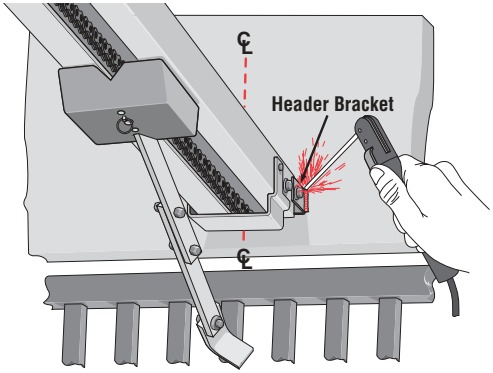

STEP 4 Lift the operator and align with center mark on ceiling. Have someone hold the operator in place or use something as a support post, and bolt to ceiling. (A support post is not part of the operator. Use only for installation.)

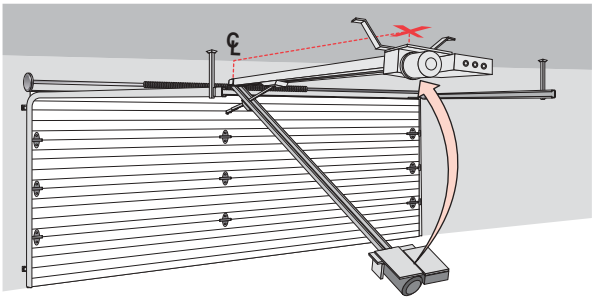

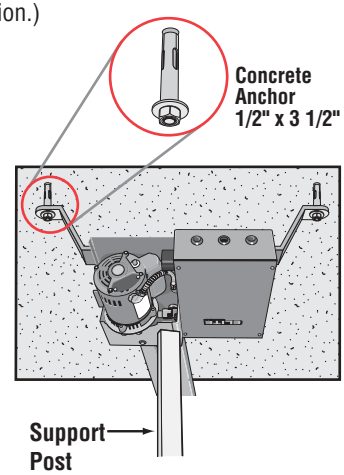

STEP 5 Bolt or weld arm to gate/door.

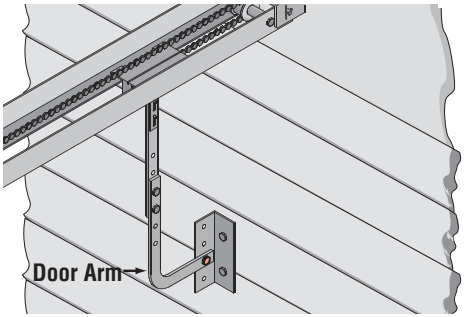

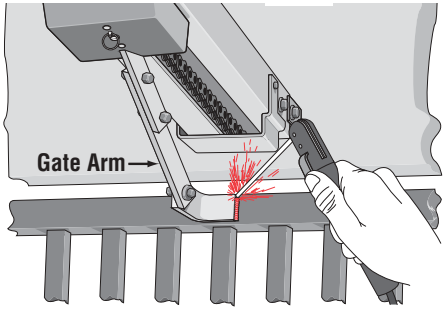

STEP 6

WARNING: To reduce the risk of SEVERE INJURY or DEATH from electrocution, the Model HCT MUST be properly grounded.

Proper grounding gives an electrical charge, such as from an electrical static discharge or a near lightning strike, a path from which to dissipate its energy safely into the earth.

Without this path, the intense energy generated by lightning could be directed towards the operator. Although nothing can absorb the tremendous power of a direct lightning strike, proper grounding can protect the operator in most cases.

The ground wire ***must*** be a single, whole piece of wire. ***Never*** splice two wires for the ground wire. If you should cut the ground wire too short, break it, or destroy its integrity, replace it with a single wire length.

Use the proper type earth ground rod for your local area. In certain circumstances, metal water pipes may be allowed for grounding the operator. Check and follow all local codes for proper grounding procedures.

CAUTION: To avoid damaging gas, power, or other underground utility lines, contact local underground utility locating companies before digging more than 18" deep.

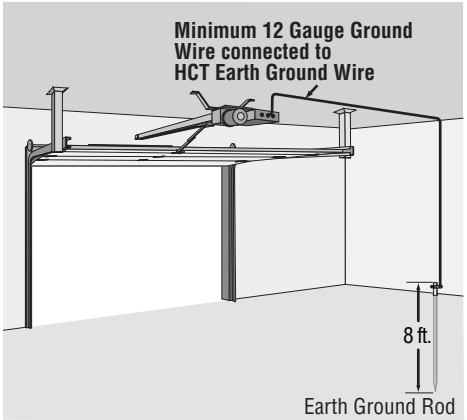

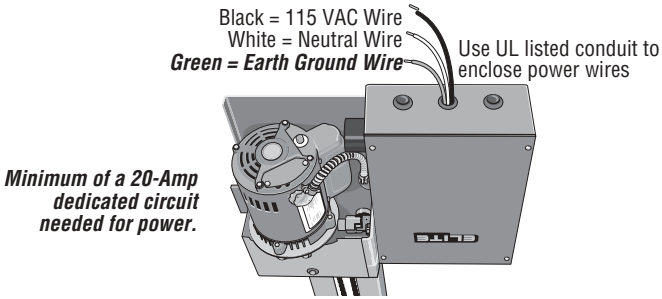

Chamberlain Professional Products is not responsible for improper installation or failure to comply with all necessary local building codes.

STEP 7

Before Adjusting, Do the Following:

1. **Turn the Power *OFF!***
2. Push the limit nut lock plate inward. Roll the nut to the direction desired.
3. Place the plate back in the notch.
4. Reapply power to operator.
5. If further adjustment is needed, repeat the process.

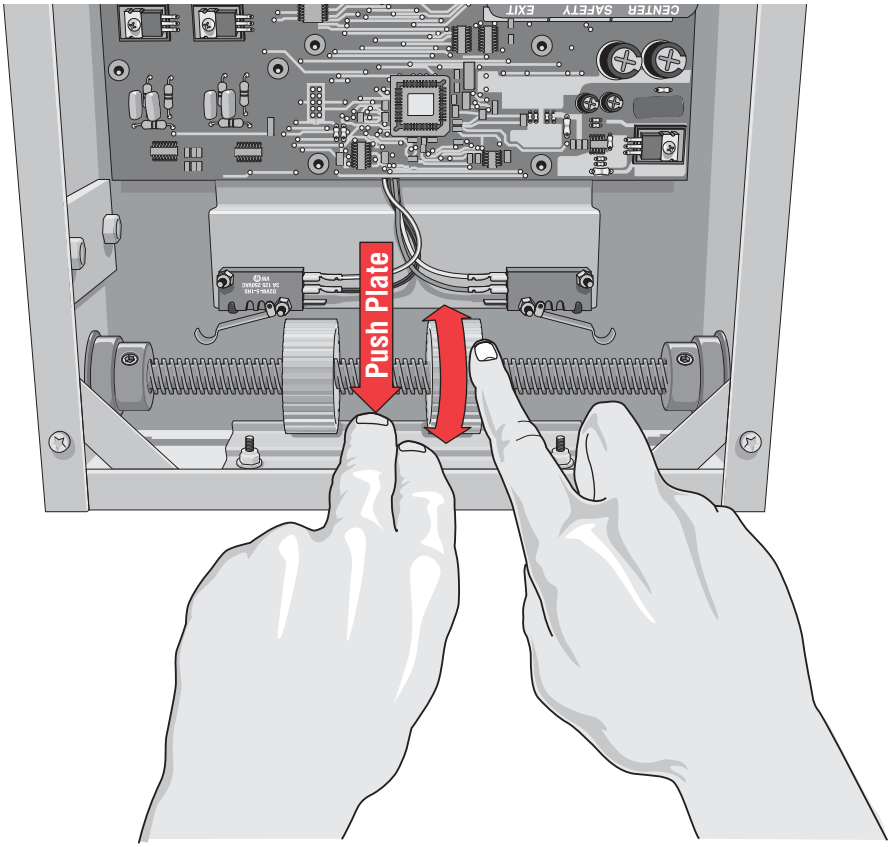

2-WAY ADJUSTABLE REVERSING SENSOR - GATE ONLY

STEP 8

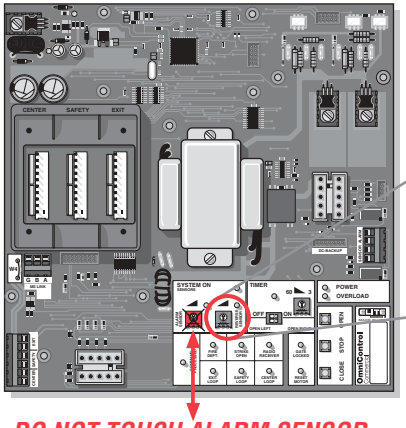

Adjusted by Qualified Service Personnel

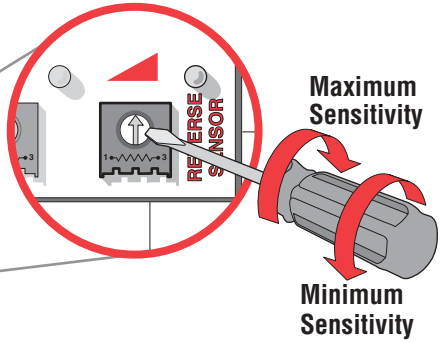

DO NOT TOUCH ALARM SENSOR

CAUTION: If the power supply to the gate operator is less than 99 volts, adjust the alarm by turning the alarm adjustment counter-clockwise enough to actuate the alarm when obstructed but not sensitive enough for false triggering to occur.

The level of reverse sensitivity has to do with the weight of the gate/door and the condition of installation.

Too sensitive = If the gate stops or reverses by itself.

Not sensitive enough = If the gate hits an obstruction or vehicle and does not stop or reverse.

ADJUSTABLE TIMER

STEP 9

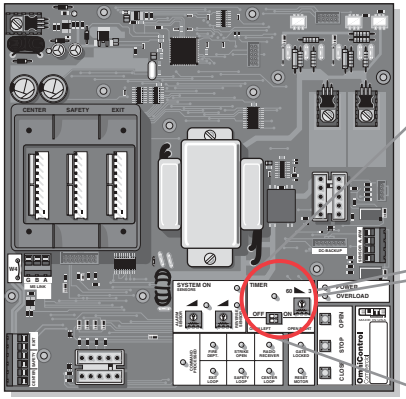

Timer ON

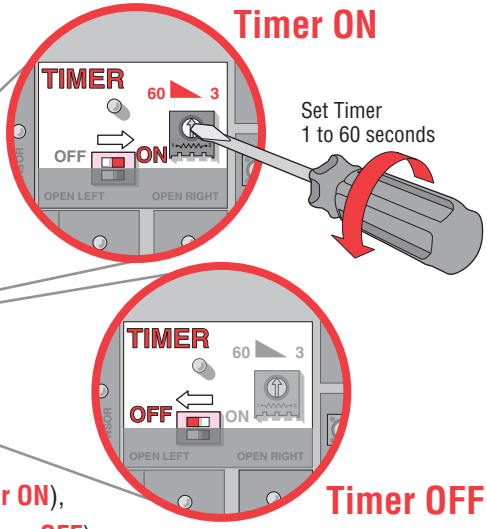

Timer OFF

Timer can be set from 1 to 60 seconds (**Timer ON**),
For push open/push close type operation (**Timer OFF**).

SURGE SUPPRESSOR TERMINAL INPUT CONNECTIONS

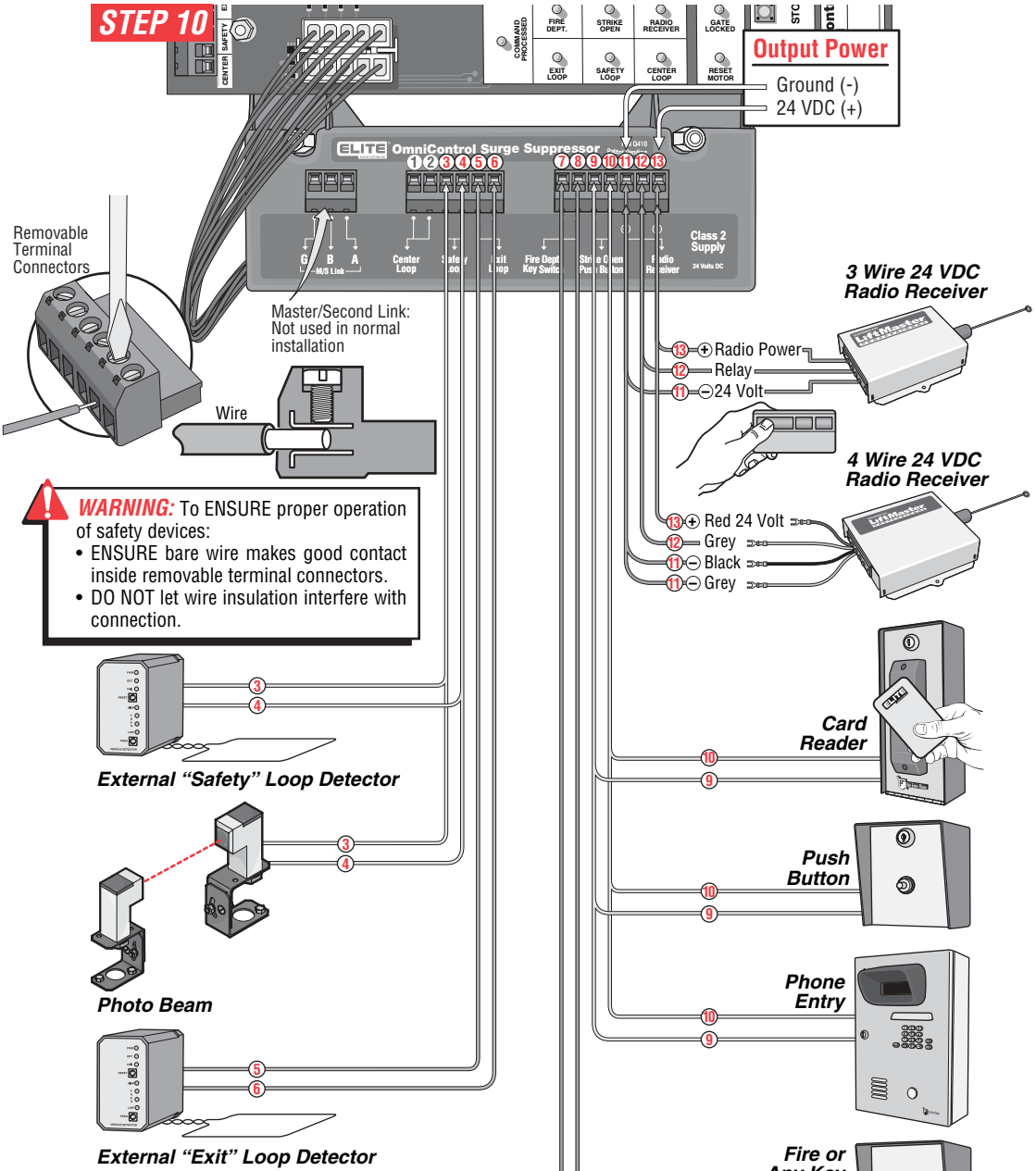

WARNING: To ENSURE proper operation of safety devices:

- ENSURE bare wire makes good contact inside removable terminal connectors.
- DO NOT let wire insulation interfere with connection.

Important: Terminals 11 and 12 are the only terminals that will Open and Close with a single push of a button. All other terminals will only open with a single push of a button.

CAUTION! - READ THESE INSTRUCTIONS

STEP 11

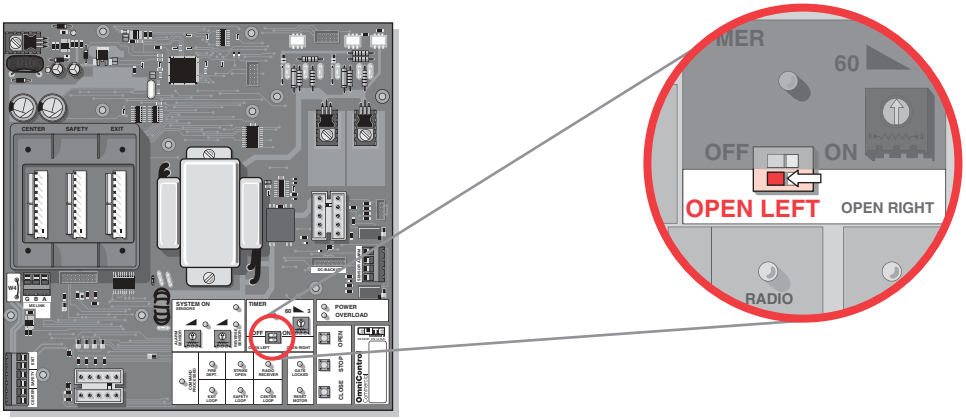

Make sure the system is "OPEN TO LEFT"

IMPORTANT INFORMATION

STEP 12

Installers are required to adhere to this procedure: The UL required Warning Signs must be installed in plain view and on ***both sides*** of each commercial gate installed. Each sign is made with fastening holes in each corner and should be permanently secured in a suitable manner. Also the warning sticker should be placed on the operator so it is clearly visible.

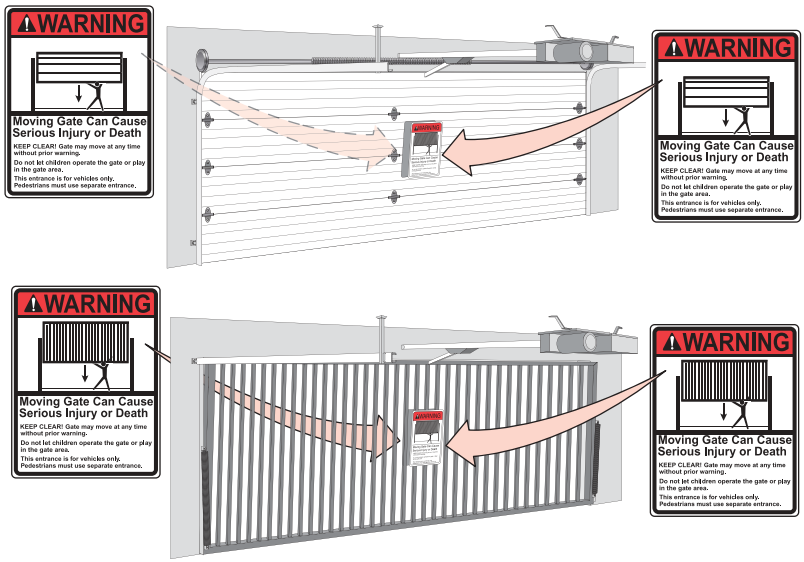

Gate ONLY

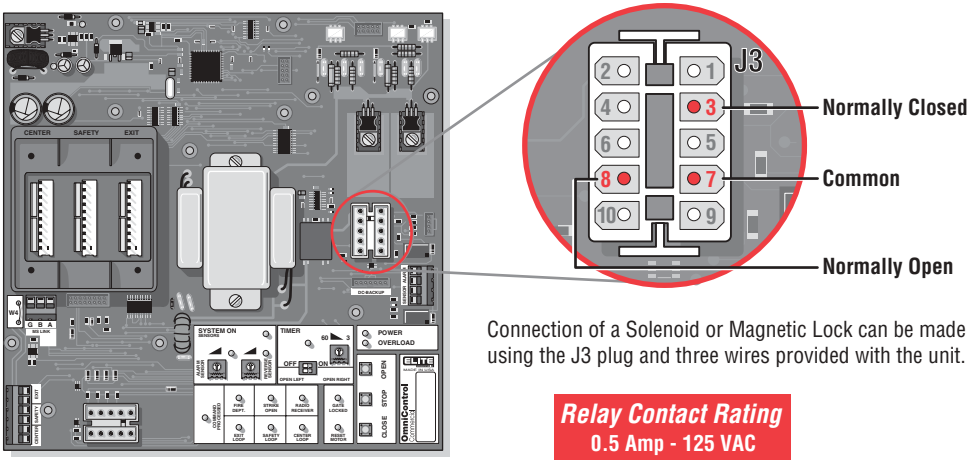

Connection of a Solenoid or Magnetic Lock can be made using the J3 plug and three wires provided with the unit.

Relay Contact Rating
0.5 Amp - 125 VAC
1 Amp - 24 VDC

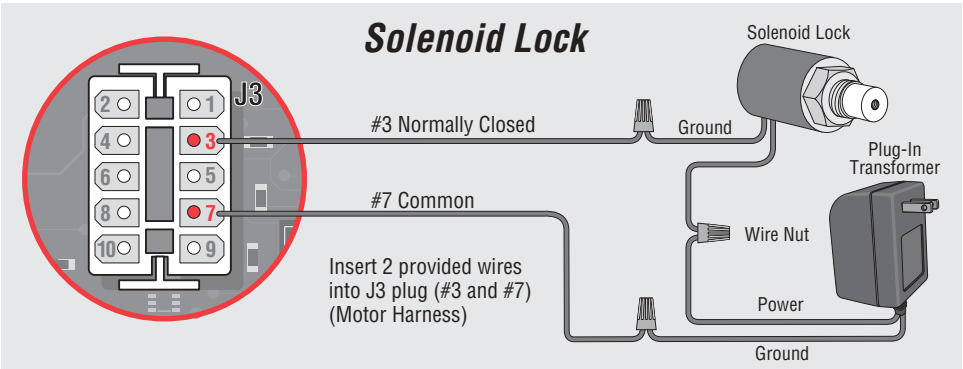

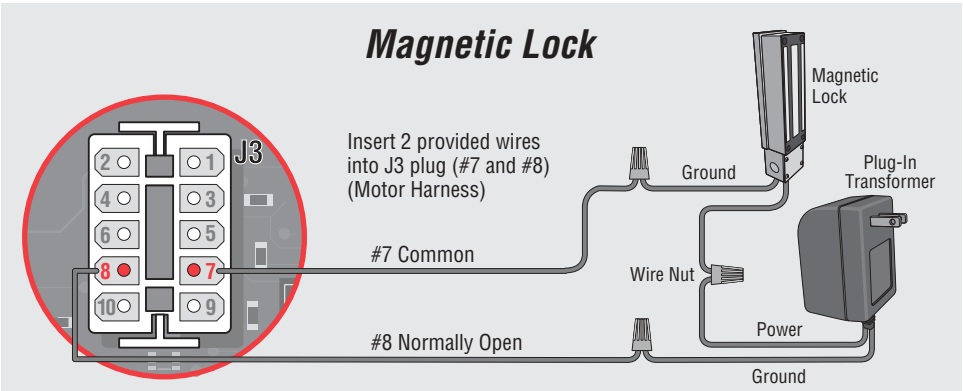

INSTRUCTIONS FOR OPTIONAL SYSTEMS

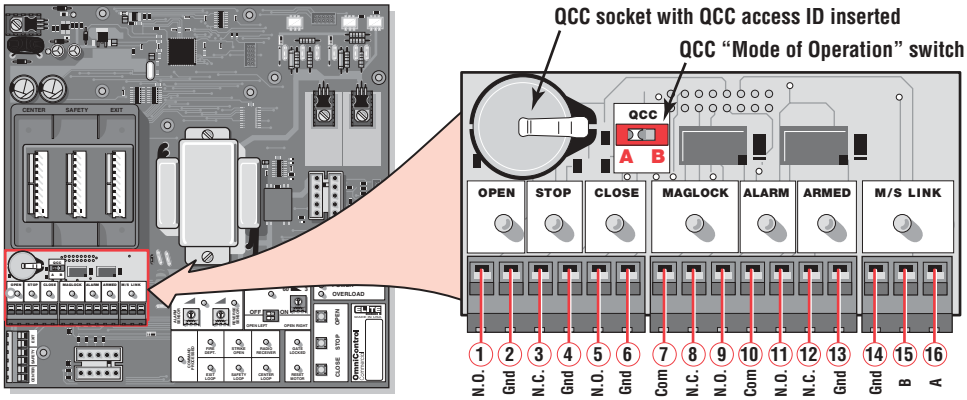

QCC is designed for slide gate operators only!

Omni Option Board
Part # OMNIEXB

1 & 2 – Open Command
3 & 4 – Stop Command
5 & 6 – Close Command
7 – Common
8 – Normally Closed
9 – Normally Open
Solenoid
Maglock

10 & 11 – Burglar Alarm Output
12 & 13 – Burglar Alarm Input
14 – Ground
15 – B
16 – A
Master/Second RS485

THREE PUSH BUTTON SYSTEM

Omni "Option Board" Needed to Perform This Function

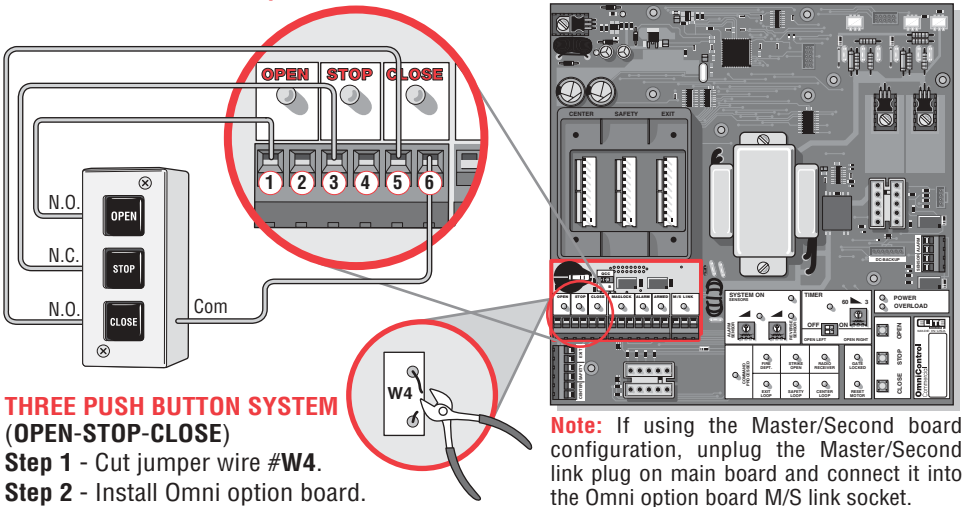

THREE PUSH BUTTON SYSTEM
(**OPEN-STOP-CLOSE**)

Step 1 - Cut jumper wire #**W4**.
Step 2 - Install Omni option board.
Step 3 - Connect **OPEN** push button to #1.
Step 4 - Connect **STOP** push button to #3.
Step 5 - Connect **CLOSE** push button to #5 & 6.

Note: If using the Master/Second board configuration, unplug the Master/Second link plug on main board and connect it into the Omni option board M/S link socket.

Make sure each push button is dry contact and there are no jumper wires between them.

IMPORTANT! The Stop button must be "Normally Closed."
2, 4 and 6 are common on Omni Option board for a 4 wire installation.

ALARM/PROXIMITY SWITCH CONNECTIONS

Omni "Option Board" Needed to Perform This Function

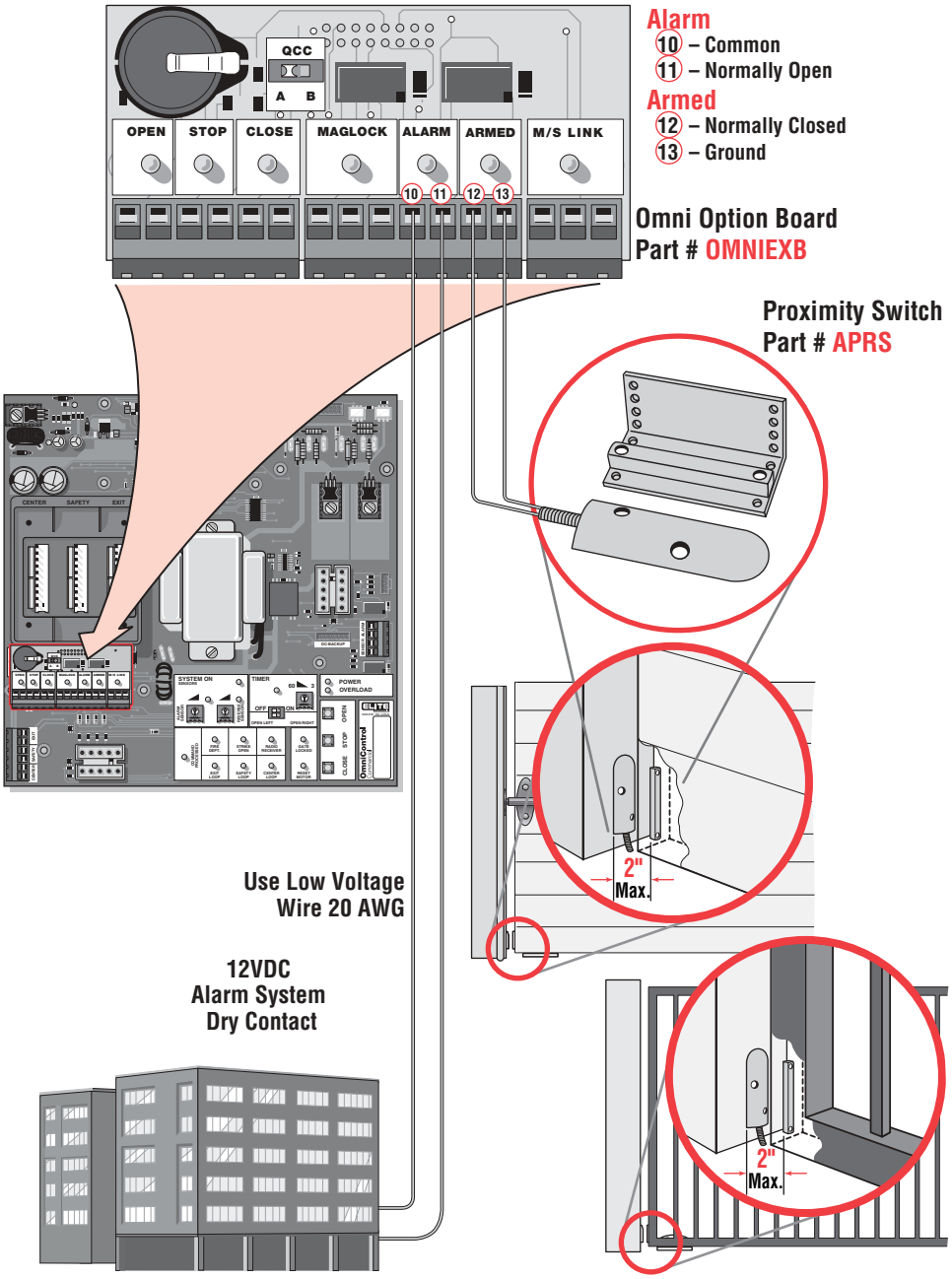

SOLENOID CONNECTION WITH OMNI OPTION BOARD - GATE ONLY

Omni "Option Board" Needed to Perform This Function

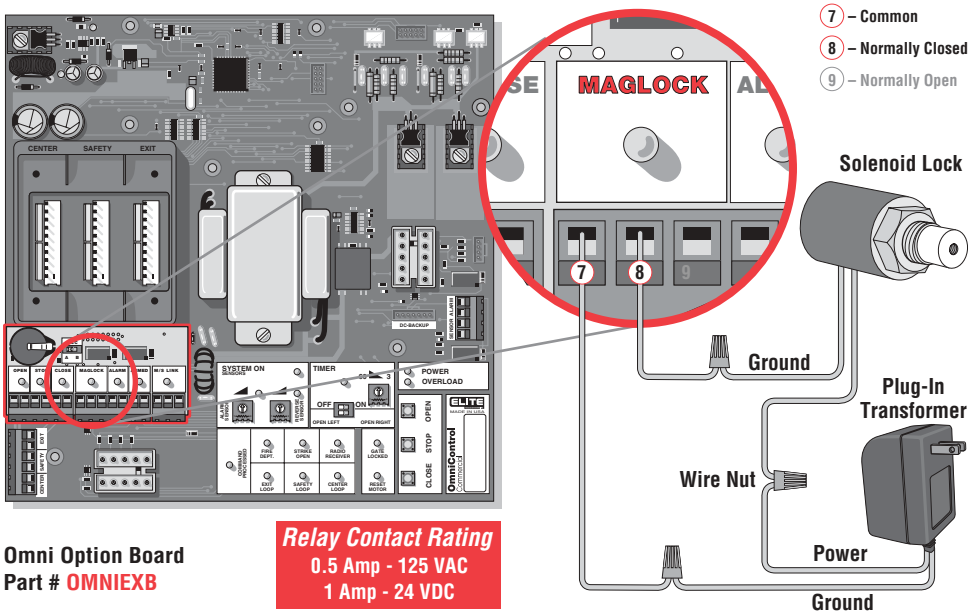

Omni Option Board
Part # OMNIEXB

Relay Contact Rating
0.5 Amp - 125 VAC
1 Amp - 24 VDC

MAGLOCK CONNECTION WITH OMNI OPTION BOARD

Omni "Option Board" Needed to Perform This Function

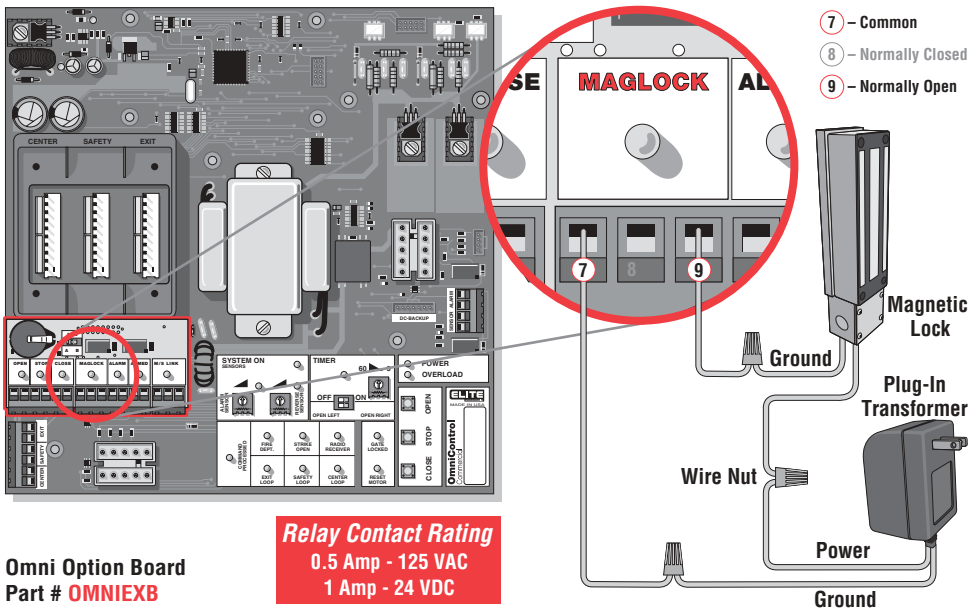

Omni Option Board
Part # OMNIEXB

Relay Contact Rating
0.5 Amp - 125 VAC
1 Amp - 24 VDC

STOP BUTTON ALARM SHUT-OFF

Omni "Option Board" Needed to Perform This Function

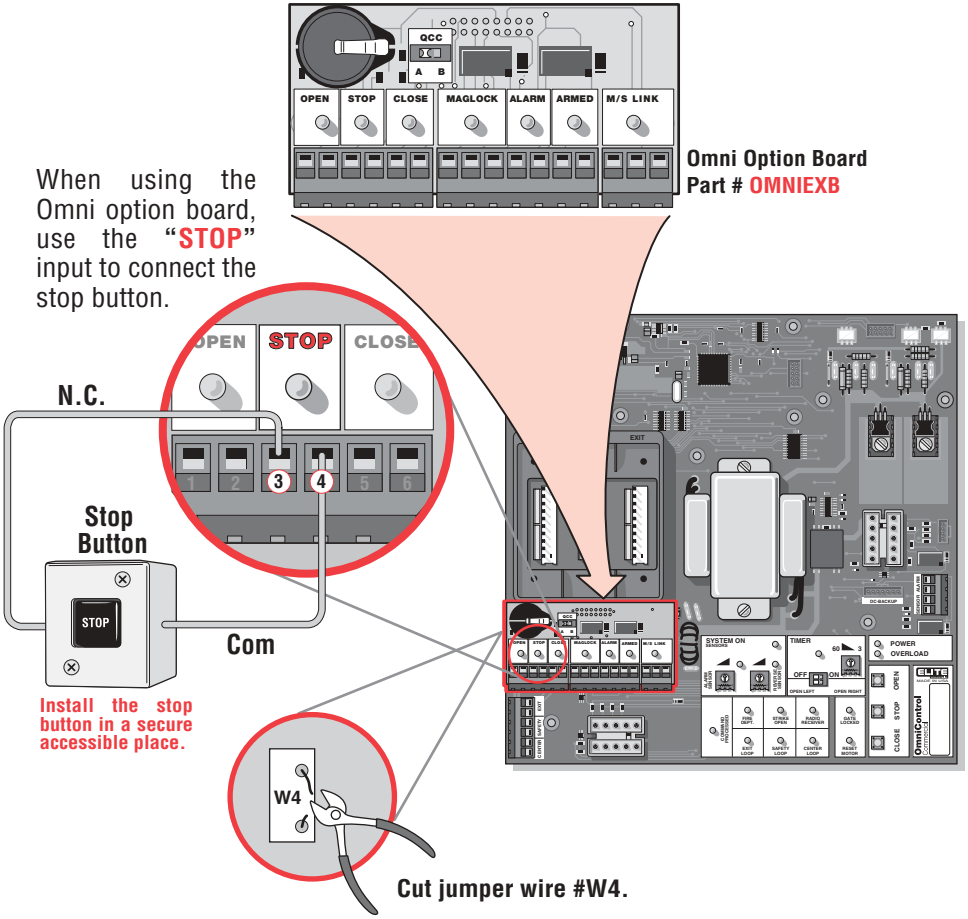

This is an important command required to stop the audio alarm in case it has been triggered. Otherwise the alarm will sound for 5 minutes and reset itself.

Use STOP Button:

- To stop the movement of the operator in case of potential entrapment.
- To reset the audio alarm. (Check for obstructions!)
- To stop the operator while traveling.

OPTIONAL RELAY ADAPTER CONNECTION - GATE ONLY

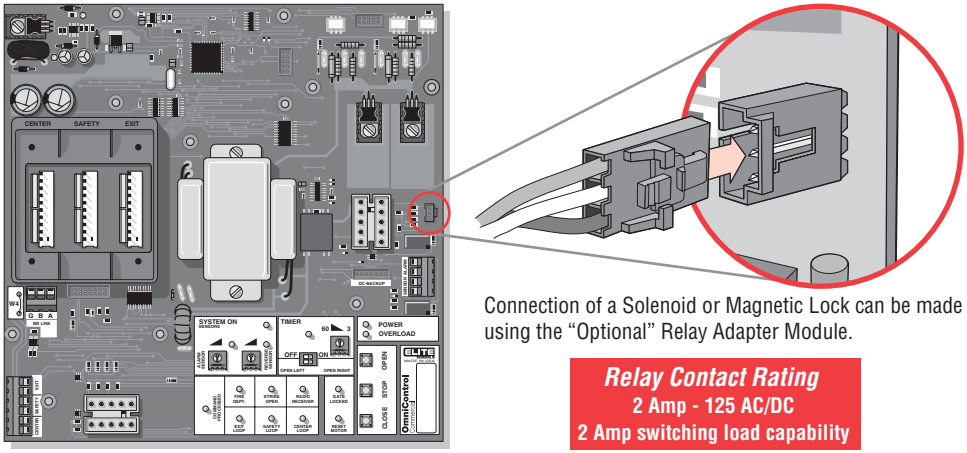

Connection of a Solenoid or Magnetic Lock can be made using the “Optional” Relay Adapter Module.

Relay Contact Rating
2 Amp - 125 AC/DC
2 Amp switching load capability

Part # Q400MAU

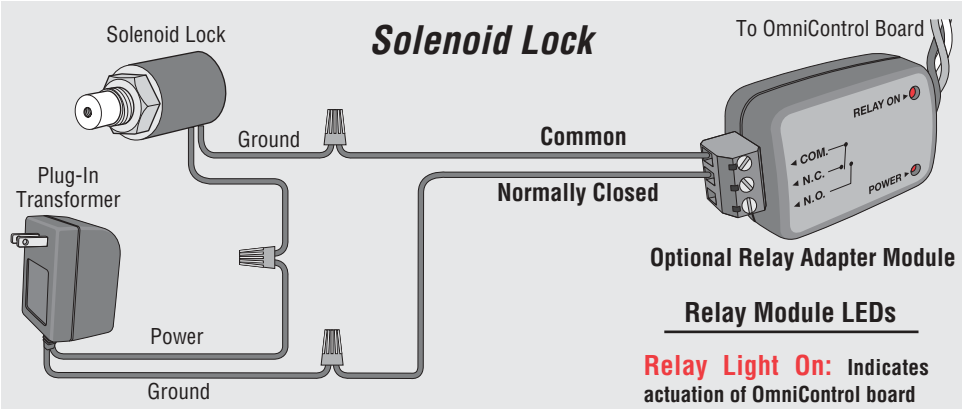

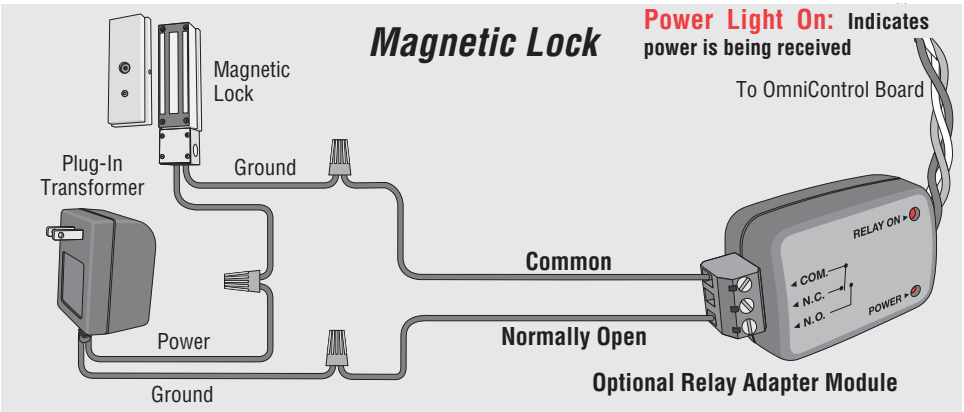

Secondary Entrapment Protection (Contact Sensor)

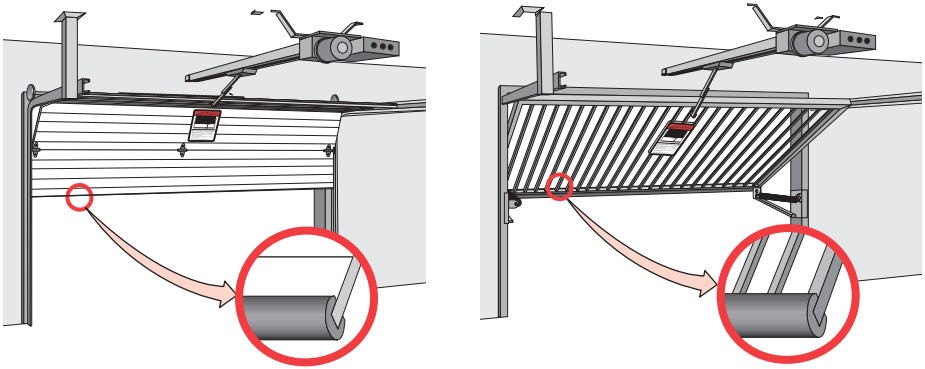

When touched, the electrically activated edge sensors immediately signal the door/gate operator to stop and reverse. Property owners are obligated to test edges regularly.

Edge Sensor Wiring

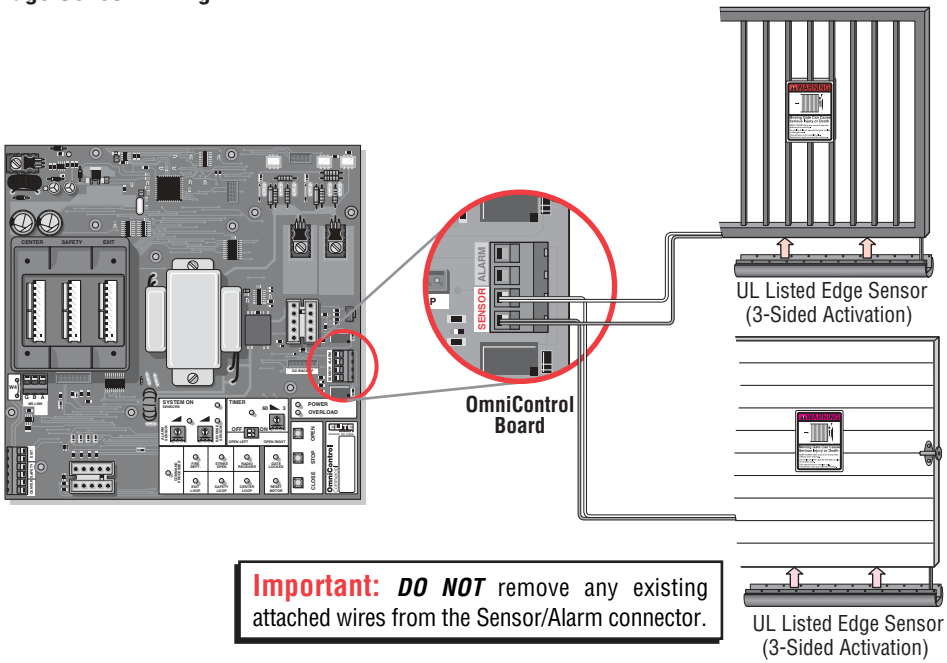

Important: ***DO NOT*** remove any existing attached wires from the Sensor/Alarm connector.

Note: If multiple sensors are being used, all of the edge sensors are to be connected in parallel at the sensor input on the Omni Control board.

If you are going to use a contact sensor as a secondary entrapment protection you should use a recognized component to comply with the revised UL325 intended to be used in class I or class II gate operator.

Secondary Entrapment Protection (Non-Contact Sensor)

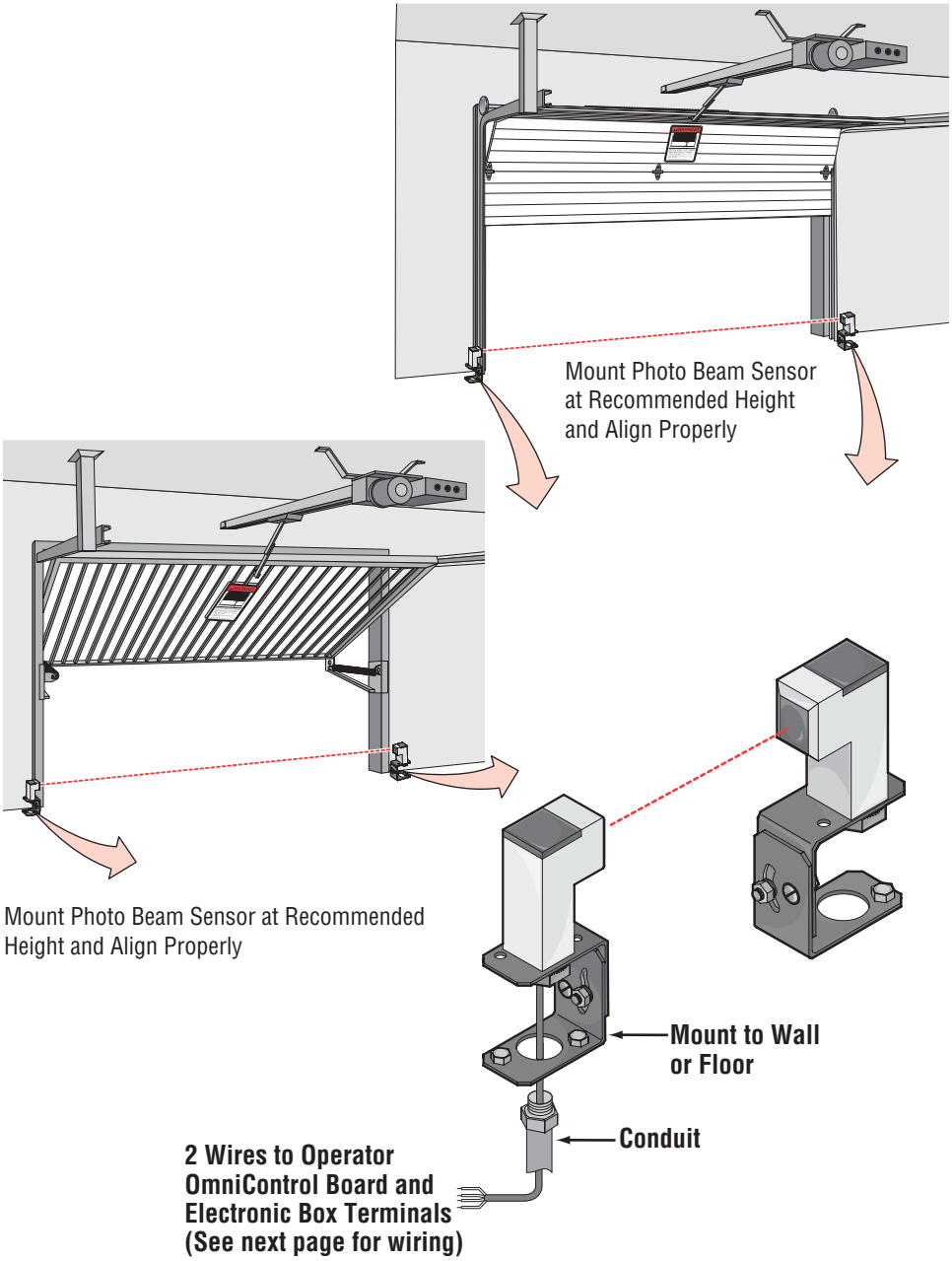

OPTIONAL PLUG-IN LOOP DETECTORS

CAUTION: Use different frequencies for every single loop detector. Turn off operator power (breaker switch from main power source) before installation.

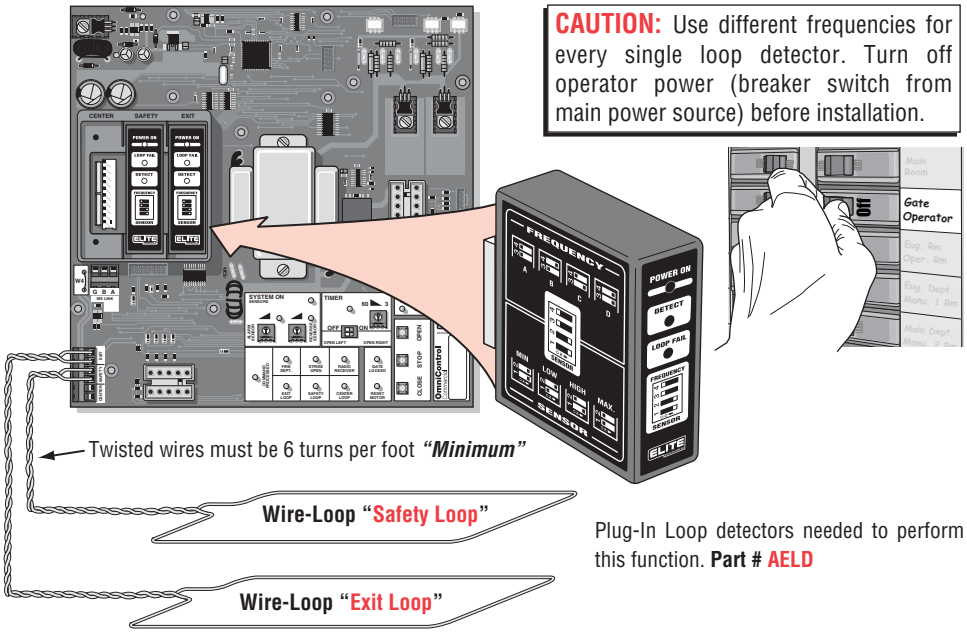

Plug-In Loop detectors needed to perform this function. **Part # AELD**

SECONDARY ENTRAPMENT PREVENTION

Photo Beam Wiring

If multiple sensors are being used, all of the photo beam sensors are to be connected in parallel at the sensor input on the OmniControl board.

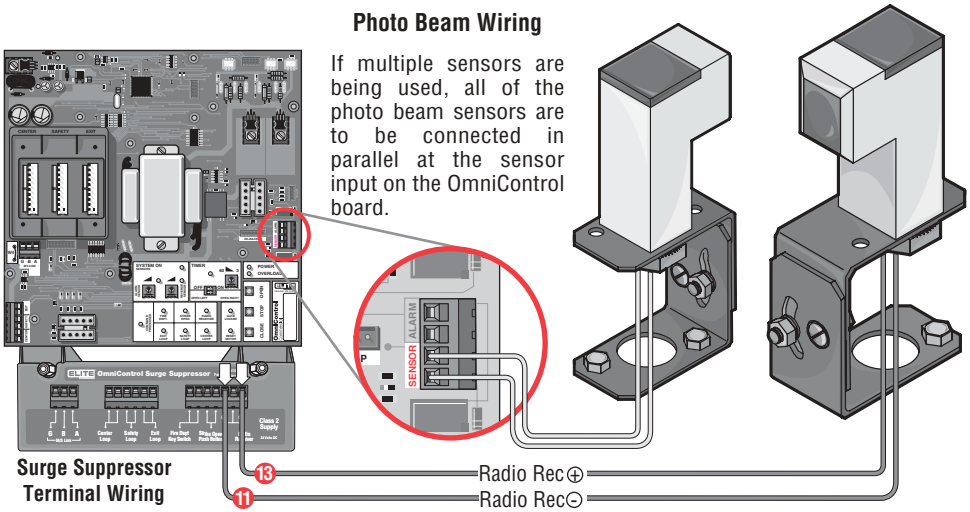

Surge Suppressor Terminal Wiring

If you are going to use a non-contact sensor as a secondary entrapment protection you should use a recognized component to comply with the revised UL325 intended to be used in class I or class II gate operator, like the following:
Part # CPS/CPS-N4

HCT LOOP SIZE AND PLACEMENT

It is *VERY* important to have enough separation between loops and gate to prevent false detection.

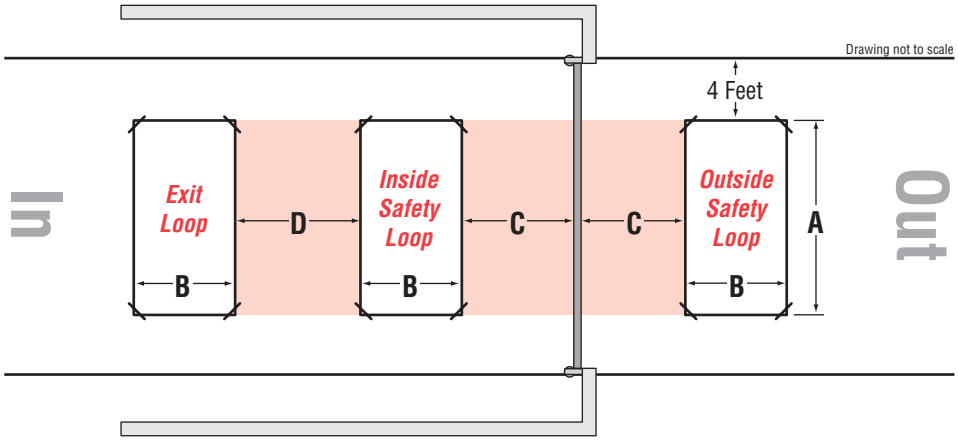

As **A** increases in size to cover a larger opening, the gate will cause a larger change of inductance when opening and closing. Therefore dimension **C** must increase as **A** increases.

If A =	6 Feet	9 Feet	12 Feet	15 Feet	18 Feet	21 Feet
Then C =	4 Feet	4.5 Feet	5 Feet	5 Feet	5.5 Feet	6 Feet

Dimension **D** should be equal to or greater than the larger of the ***"Inside Safety Loop"*** or ***"Exit Loop's"*** dimension **B**.

If the Inside and outside safety loop are connected to the ***same*** loop detector they should be series connected. Dimension **A**, **B** and **C** should be the same for each loop. Both loops should have the same number of wire turns. (See Page 25)

This is for a typical HCT loop installation. Individual circumstances may alter dimensions.

For toll free technical support: **1-800-528-2806**

Loop Installation "Saw Cut" Type

1. Mark the loop layout on the pavement. Remove sharp inside corners that can damage the loop wire insulation.
2. Set the saw to cut to a depth (typically 2" to 2.5") that insures a minimum of 1" from the top of the wire to pavement surface. The saw cut width should be larger than the wire diameter to avoid damage to the wire insulation when placed in the saw slot. Cut the loop and feeder slots. Remove all debris from the slot with compressed air. Check that the bottom of the slot is even.
3. It is highly recommended that a continuous length of wire be used to form the loop and feeder to the detector. It is also highly recommend using 12-18 AWG cross-link polyethylene (XLPE) insulation for the loop wire. Use heavier wire gauge for a more durable loop area. Use a wood stick or roller to insert the wire to the bottom of the saw cut (Do not use sharp objects). Wrap the wire in the loop saw cut until the desired number of turns is reached. Each turn of wire must lay flat on top of the previous turn.
4. The wire must be twisted together a minimum of 6 twists per foot from the end of the saw cut to the detector.
5. The wire must be held firmly in the slot with 1" pieces of backer rod every 1 to 2 feet. This prevents the wire from floating when the loop sealant is applied.
6. Apply a sealant. The sealant selected should have good adhering properties with similar expansion and contraction characteristics to that of the pavement material.

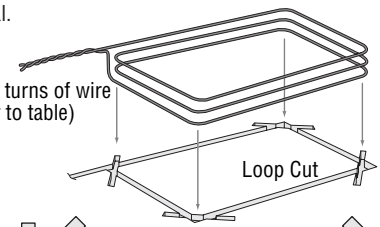

Number of Wire Turns Needed for Loop

Important!

Loop Perimeter	Number of Wire Turns
10 feet to 13 feet	4
14 feet to 26 feet	3
27 feet to 80 feet	2
80 feet and up	1

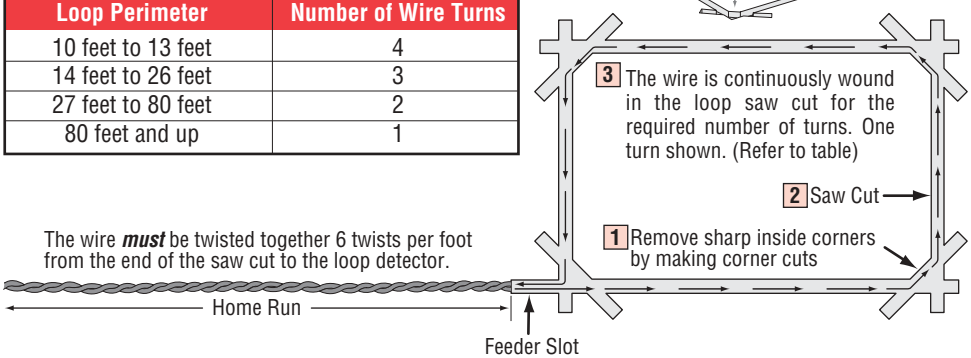

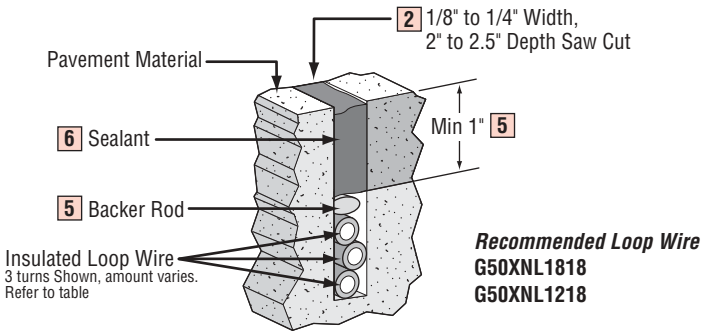

Recommended Loop Wire
G50XNL1818
G50XNL1218

WIRING EXTERNAL LOOP DETECTORS

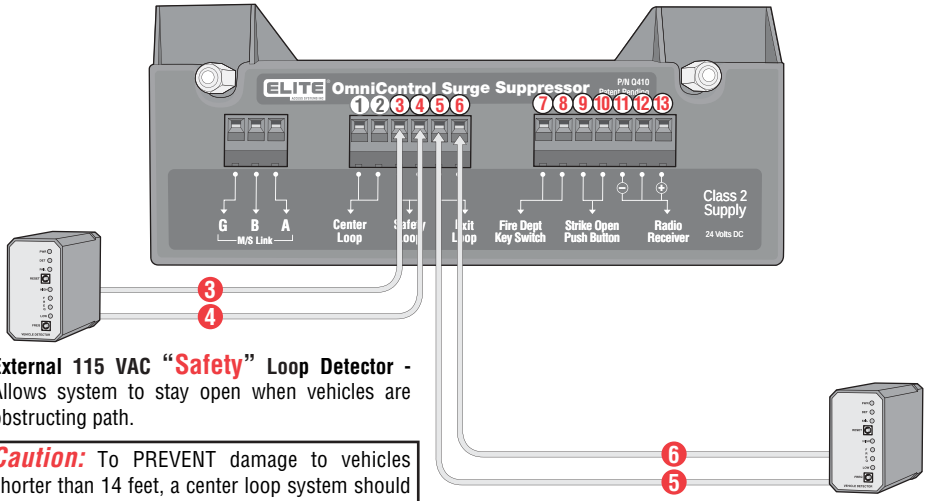

External 115 VAC "Safety" Loop Detector - Allows system to stay open when vehicles are obstructing path.

Caution: To PREVENT damage to vehicles shorter than 14 feet, a center loop system should be installed.

If the ***"Inside"*** and ***"Outside"*** safety loops are connected to the ***same*** loop detector:

- They should be series connected to the detector
- Have the same dimensions. (Page 24)
- Have the same number of wire turns. (Page 25)

External 115 VAC "Exit" Loop Detector - Allows operator to automatically open for exiting vehicles.

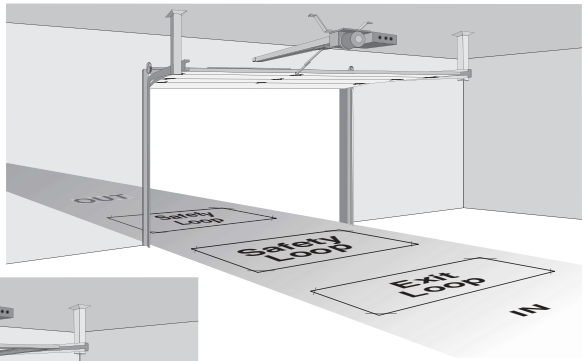

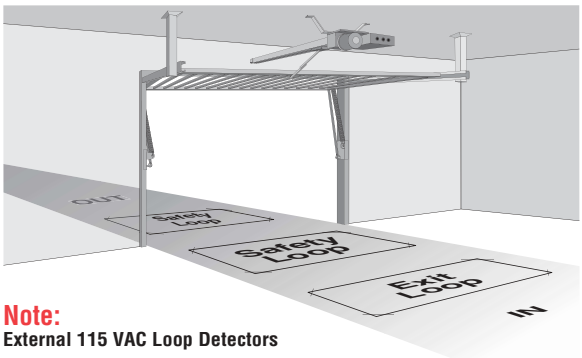

Note:
External 115 VAC Loop Detectors

For installation information about Plug-In Loop detectors, please refer to page 23.

SET SECURITY MODE

The Universal Receiver can be used with up to 15 rolling code transmitters or passwords in HIGH security mode. Alternately, it can be used with up to 31 of any type transmitter in NORMAL security mode, including any combination of rolling code, billion code, or dip switch remotes.

The jumper must be set at the HIGH position for the receiver to operate in HIGH security mode. It must be set at NORMAL position to operate at the NORMAL mode.

When changing from NORMAL to HIGH security mode, any previous transmitter codes must be erased. Repeat Steps 2 and 3 in the Programming Section on the next page to reprogram the receiver for each remote control transmitter in use.

The receiver is factory set at HIGH. To verify frequency, please refer to the label on the unit.

WARNING: To reduce the risk of SERIOUS INJURY or DEATH from electrocution:

- Be sure power is not connected BEFORE installing the receiver.

To reduce the risk of SERIOUS INJURY or DEATH from a moving gate or garage door:

- ALWAYS keep remote controls out of reach of children. NEVER permit children to operate, or play with remote control transmitters.
- Activate gate or door ONLY when it can be seen clearly, is properly adjusted, and there are no obstructions to door travel.
- ALWAYS keep gate or garage door in sight until completely closed. NEVER permit anyone to cross path of moving gate or door.

HIGH SECURITY MODE

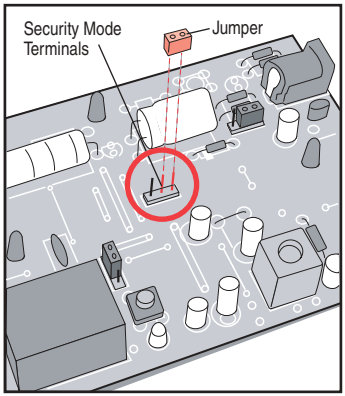

NORMAL SECURITY MODE

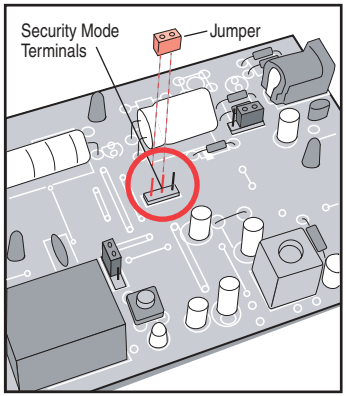

NOTICE: To comply with FCC and or Industry Canada (IC) rules, adjustment or modifications of this receiver and/or transmitter are prohibited, except for changing the code setting or replacing the battery. THERE ARE NO OTHER USER SERVICEABLE PARTS.
Tested to Comply with FCC Standards for Home or office use. Operation is subject to the following two conditions: (1) this device may not cause harmful interference, and (2) this device must accept any interference received, including interference that may cause undesired operation.

SET OUTPUT DURATION

For commercial applications, the receiver can be set for either constant or momentary closure on the output contacts. Use of constant closure is prohibited on residential garage door openers because it overrides the safety reversal devices.

With the jumper in the "M" (Momentary) position, the contacts will close for 1/4 second regardless of the length of radio transmission. With the jumper in "C" (Constant) position, the contacts will stay closed as long as the radio continues transmitting.

The receiver is factory set at M.

WARNING: To reduce the risk of SERIOUS INJURY or DEATH, the use of CONSTANT OPERATION on residential openers is PROHIBITED.

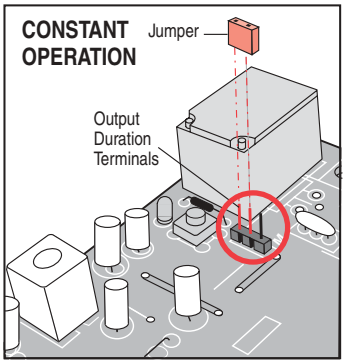

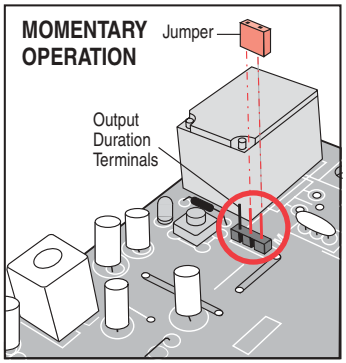

PROGRAMMING THE REMOTE TO THE RECEIVER

1. Pry open the front panel of receiver case with a coin or a screwdriver. Re-connect power to opener.

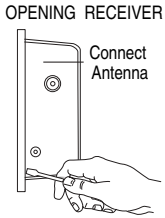

2. Press and release the "learn" button on the receiver. The learn indicator light will glow steadily for 30 seconds.

3. Within 30 seconds, press and hold the button on the hand-held remote that you wish to operate your garage door.

The opener will now operate when the push button on either the receiver or the remote control transmitter is pressed.

Repeat Steps 2 and 3 for each remote control that will be used to operate the garage door opener.

TO ERASE ALL REMOTE CONTROL CODES

Press and hold the "learn" button on the receiver panel until the indicator light turns off (about 6 seconds). All transmitter codes are now erased. Then follow the programming steps to reprogram each remote control.

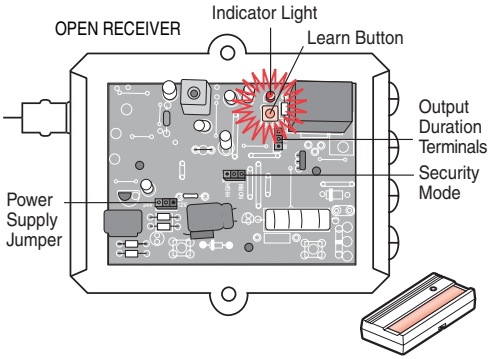

HOW TO REPLACE THE CONTROL BOARD

Disconnect wire harnesses from OmniControl board. Unscrew 3 nuts and remove board.

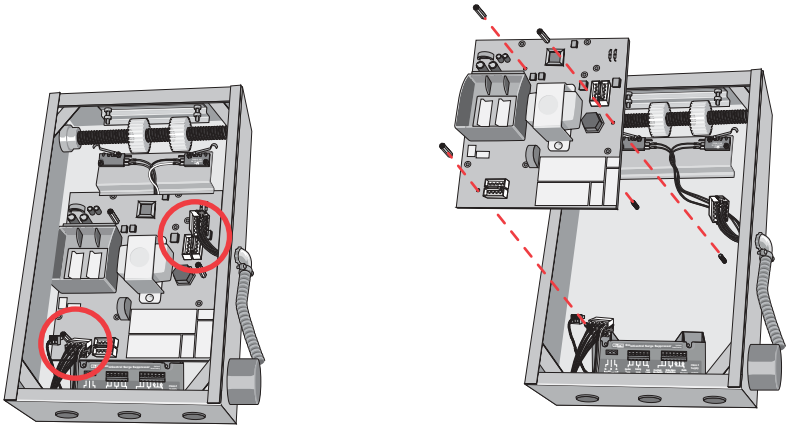

AUDIO ALARM

WARNING: To reduce the risk of SERIOUS INJURY or DEATH, the alarm MUST NOT be disabled.

When one of the following events happens ***Twice Consecutively, an Alarm will Sound!***

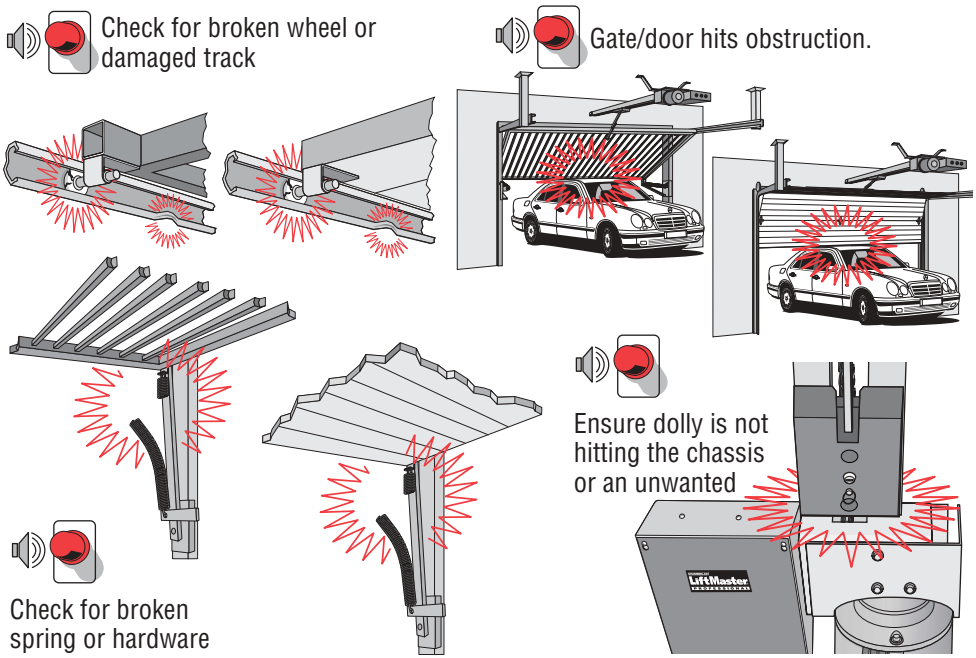

WARNING: To reduce the risk of SERIOUS INJURY or DEATH:

1) ***READ AND FOLLOW ALL INSTRUCTIONS.***

2) ***Never*** let children operate or play with gate controls. Keep the remote control away from children.

3) ***Always keep people and objects away from the gate.***
NO ONE SHOULD CROSS THE PATH OF THE MOVING GATE.

4) Test the gate operator monthly. The gate MUST reverse on contact with a rigid object or stop when an object activates the non-contact sensors. After adjusting the force or the limit of travel, retest the gate operator, Failure to adjust and retest the gate operator properly can increase the risk of injury or death.

5) Use the emergency release only when the gate is not moving. Make sure the power for the gate operator is off.

6) ***KEEP GATES PROPERLY MAINTAINED.*** Read the manual. Have a qualified service technician make repairs to the gate or gate hardware.

7) ***The entrance is for vehicles only. Pedestrians must use separate entrance.***

8) ***SAVE THESE INSTRUCTIONS.***

EMERGENCY RELEASE

STEP 1

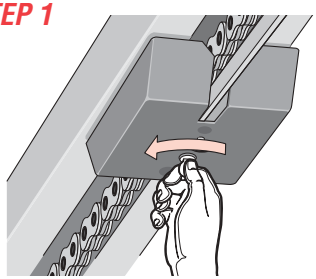

Insert key and turn to unlock position.

STEP 2

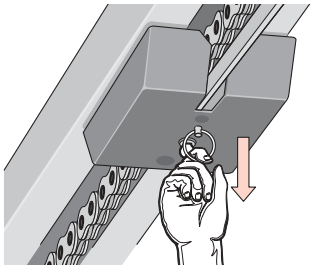

Pull down the release ring.

STEP 3

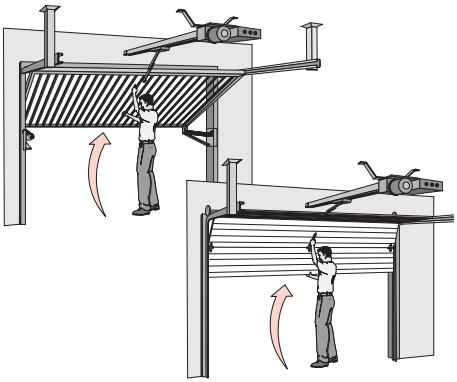

Lift the gate/door up.

STEP 4

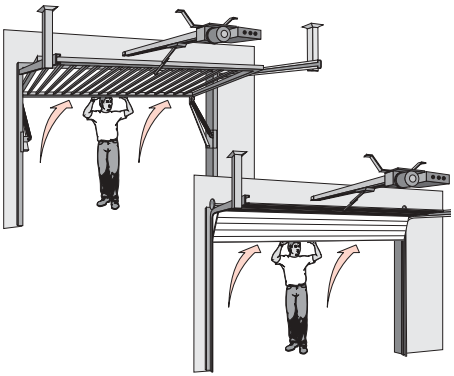

Lift the gate/door up until fully open.

WARNING: To reduce the risk of SERIOUS INJURY or DEATH from a falling gate/door:

- If possible, use emergency release to disengage trolley ONLY when door is CLOSED. Weak or broken springs or unbalanced gate/door could result in an open gate/door falling rapidly and/or unexpectedly.
- NEVER use emergency release unless gateway/doorway is clear of persons and obstructions.

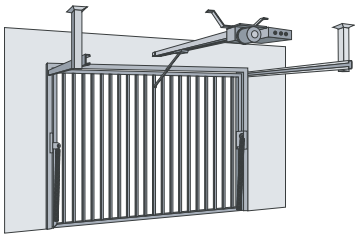

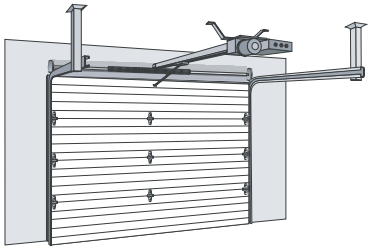

When power is restored, the gate/door will automatically be operational.

TROUBLESHOOTING TABLE

Condition	Possible Causes	Solution
Overload LED ON and Power LED OFF	*1.* Short circuit at terminals 11 and 13 *2.* Short circuit at any of the loop detector in the board *3.* Short circuit in the control board	*1.* Remove the short circuit condition at the terminals *2.* Remove the defective loop detector *3.* Send the board to repair
Overload LED On and Power LED On	*1.* Excessive current draw at terminal 13 *2.* Over-voltage at the 120 VAC line input	*1.* Reduce the accessories load from surge suppressor terminal 13 *2.* Verify your electrical power
System On LED Flashing	*1.* One limit switch is faulty (Rapid Flashing) *2.* Motor thermal fuse has popped-out (Slowly Flashing)	*1.* Test the limit switches and wire connections, fix the fault *2.* Reset the motor
Reverse Sensor LED On	*1.* Gate/door has encountered an obstruction during traveling *2.* Reverse sensor is extra sensitive	*1.* Remove the obstruction *2.* Turn the reverse sensor switch counter clockwise a little more and try again
Alarm Sensor LED On	*1.* Gate/door encountered an obstruction during traveling *2.* Alarm sensor is extra sensitive	*1.* Remove the obstruction *2.* Turn the alarm sensor switch counter clockwise a little more and try again
Command Processed LED On	*1.* There is a command hold active	*1.* This is a normal response of the gate/door operator. It does not represent necessarily that there is a problem.
Timer LED Blinking and Command Processed LED Blinking	*1.* There is a command holding the gate/door open	*1.* This is a normal response of the gate/door operator. It does not represent necessarily that there is a problem. Check inputs for command.
Timer LED Blinking, Command Processed LED Blinking and Reverse Sensor LED On	*1.* Gate/door has reopened because it encountered an obstruction while closing.	*1.* Any re-new command will resume normal operation. Check for obstructions.
Audio Alarm On	*1.* Gate/door has encountered two consecutive obstructions while trying to close or open	*1.* Any re-new command will resume normal operation but not a radio command. Check for obstructions. *2.* You can stop the alarm by using the stop button.
Any "Loop LED" On and No Vehicle on the Sensing Area	*1.* The loop detector needs to be reset. *2.* The wire loop has been disrupted *3.* The loop detector needs to work in a different frequency *4.* The loop detector is too sensitive	*1.* Reset the loop detector (If you use Plug-in Loop detectors, change the setting for sensitivity and come back to your original setting). *2.* Verify and correct connections *3.* Set a different working frequency *4.* Decrease the sensitivity of the loop detector

For Toll Free Technical Support: **1-800-528-2806**

Resetting Motor

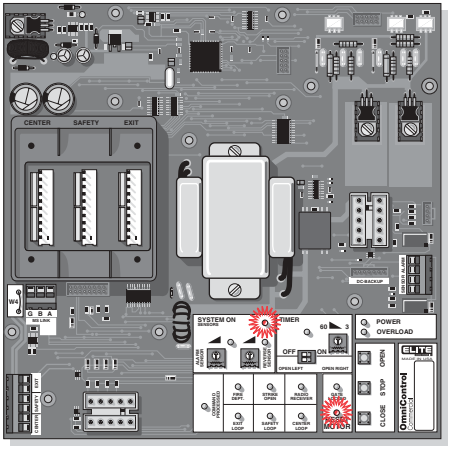

Press firmly to reset thermal breaker on the motor.

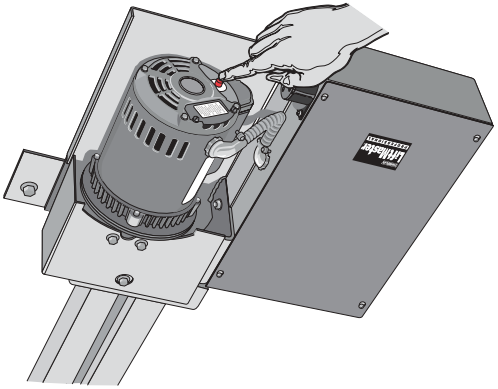

"Reset Motor" LED Light flashes once
then
"System On" LED flashes slowly

Gate/Door Will Not Close!

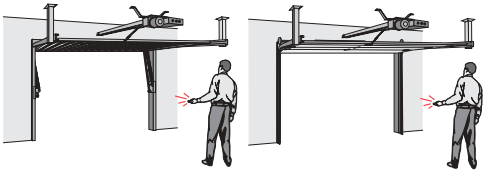

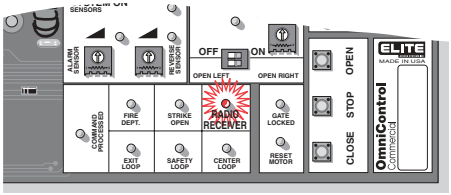

Symptom: The radio receiver LED on the control board remains **"ON"** when using the remote control.

Possible Solutions: Stuck remote control button. The radio receiver has malfunctioned in the **"ON"** position.

Gate/Door Will Not Open!

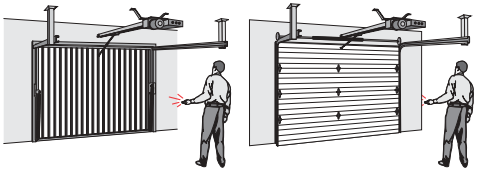

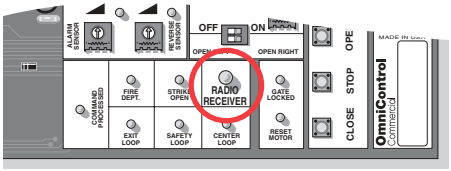

Symptom: The radio receiver LED on the control board remains **"OFF"** when using the remote control.

Possible Solutions: Dead battery in the remote control. Remote control code switches are different from radio receiver code switches. The radio receiver has malfunctioned in the **"OFF"** position.

PROPERTY OWNER'S CHECKLIST OF DOOR INSTALLATION

1. ☐ Property owner and installer must read all warnings and safety precautions and be aware of their roles and responsibilities. (Pages 2-7)
2. ☐ Make sure the hardware springs are balanced and the gate/door opens and closes smoothly without operator connected.
3. ☐ Operator must be ***securely*** fastened to ceiling. (Page 9)
4. ☐ Operator arm must be connected ***securely*** to gate/door. (Page 9)
5. ☐ Verify that the AC power is connected properly and property owner knows how to shut off power to operator. (Page 10)
6. ☐ Verify that the gate/door opens and closes as needed. (Page 11)
7. ☐ When gate/door hits an object during operation, it ***must*** stop or reverse. (Page 12)
8. ☐ ***Know how to operate the emergency release.*** (Page 28)
9. ☐ Make sure that any pinch point or potential entrapment are guarded by means of safety devices or like. (Pages 21-23)
10. ☐ Warning placards need to be permanently mounted on ***both*** sides of gate/door. (Page 14)
11. ☐ Test all additional equipment connected to operator.
12. ☐ Make sure ***all*** wire connections are ***securely*** fastened.
13. ☐ Review typical maintenance on operator. (Page 35)
14. ☐ Schedule periodic maintenance on operator by qualified service technician.
15. ☐ Inquire about Manufacturer's *"operator warranty"*. (Warranty Card Included with operator)
16. ☐ Inquire about ***separate*** *"installation warranty"* with installer.

PROPERTY OWNER'S CHECKLIST OF GATE INSTALLATION

1. ☐ Property owner and installer must read all warnings and safety precautions and be aware of their roles and responsibilities. (Pages 2-7)
2. ☐ Make sure the hardware springs are balanced and the gate/door opens and closes smoothly without operator connected.
3. ☐ Operator must be ***securely*** fastened to ceiling. (Page 9)
4. ☐ Operator arm must be connected ***securely*** to gate/door. (Page 9)
5. ☐ Verify that the AC power is connected properly and property owner knows how to shut off power to operator. (Page 10)
6. ☐ Verify that the gate/door opens and closes as needed. (Page 11)
7. ☐ When gate/door hits an object during operation, it ***must*** stop or reverse. (Page 12)
8. ☐ ***Know how to operate the emergency release.*** (Page 28)
9. ☐ Make sure that any pinch point or potential entrapment are guarded by means of safety devices or like. (Pages 21-23)
10. ☐ Warning placards need to be permanently mounted on ***both*** sides of gate/door. (Page 14)
11. ☐ Test all additional equipment connected to operator.
12. ☐ Make sure ***all*** wire connections are ***securely*** fastened.
13. ☐ Review typical maintenance on operator. (Page 35)
14. ☐ Schedule periodic maintenance on operator by qualified service technician.
15. ☐ Inquire about Manufacturer's *"operator warranty."* (Warranty Card Included with operator)
16. ☐ Inquire about ***separate*** *"installation warranty"* with installer.

HCT PARTS ILLUSTRATION

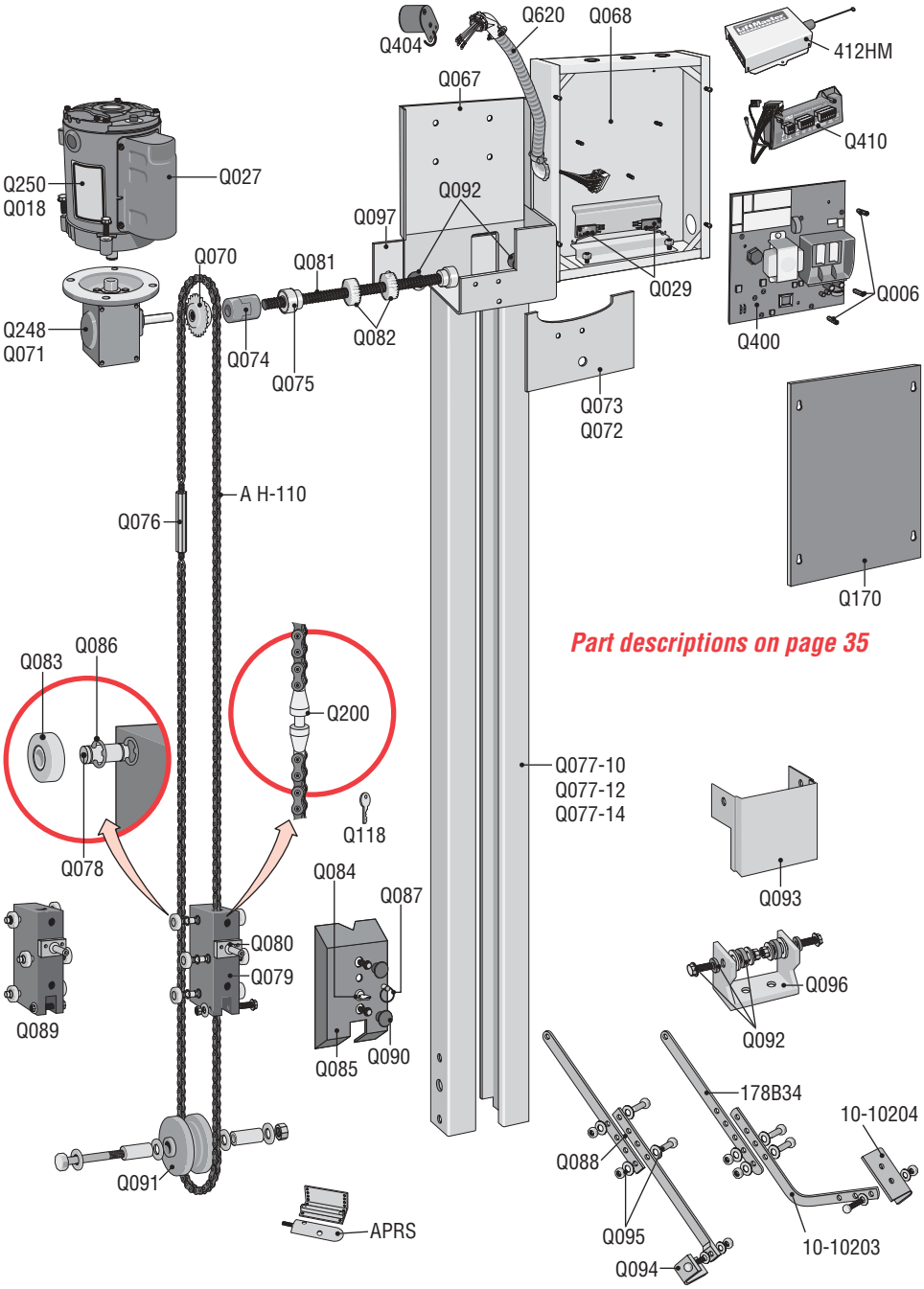

HCT ACCESSORIES

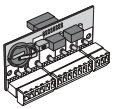

O-OMNI EXB

AELD

970LM

Q400MAU

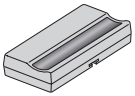

971LM

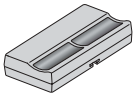

972LM

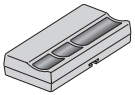

973LM

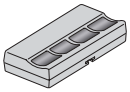

974LM

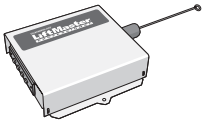

423LM

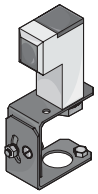

CPS/CPS-N4

Part descriptions on page 35

HCT PARTS LIST

412HM - Single Channel Radio Receiver
423LM - Three Channel Radio Receiver
970LM - 3-Button Mini Transmitter
971LM - 1-Button Transmitter
972LM - 2-Button Transmitter
973LM - 3-Button Transmitter
974LM - 4-Button Transmitter
AELD - Plug-In Loop Detector
AH-110 - Chain #41 (per 10' box)
APRS - Proximity Switch
CPS - 24V Photo Beam
CPS-N4 - Waterproof Eyes
OMNIEXB - Omni Option Board
Q006 - PC Board Nuts (Set)
Q018 - 1/2 HP Electric Motor Pre 2/99
Q027 - Motor Capacitor
Q029 - Limit Switch (Sold Individually)
Q067 - Chassis
Q068 - Electronic Box
Q070 - Drive Sprocket
Q071 - Gear Reducer Pre 2/99
Q072 - Gear Box Cover Pre 1/99
Q073 - Gear Box Cover Post 1/99
Q074 - Coupling (3/4 x 5/8) 3 pcs
Q075 - Limit Switch Ball Bearing
Q076 - Turn Buckle
Q077 - Track (One Pair 10', 12', 14')
Q078 - Trolley Wheel Shaft
Q079 - Trolley Body
Q080 - Dolly Latch
Q081 - Limit Switch Bolt
Q082 - Limit Switch Nuts
Q083 - Dolly Wheels
Q084 - Emergency Key Release
Q085 - Dolly Cover
Q086 - Retaining Spring Clip
Q087 - Emergency Pulling Ring
Q088 - Gate Arm
Q089 - Trolley Body Assembly
Q090 - Plastic Plug
Q091 - Idler Sprocket
Q092 - Rubber Isolator
Q093 - Idler Sprocket Cover
Q094 - Arm Bracket
Q095 - Arm Bushing
Q096 - Header Bracket
10-10203 - Curved Arm Assembly
10-10204 - Door Bracket
178B34 - Straight Arm Assembly
Q097 - Mounting Plate
Q118 - Key for Access Door/Hercules
Q170 - Electronic Box Cover (Black)
Q200 - Chain Coupling/Release
Q248 - Gear Reducer (40:1) Post 2/99
Q250 - 1/2 HP Electric Motor Post 2/99
Q400 - OmniControl Board
Q400MAU - Omni Relay Adapter Module
Q404 - Omni Alarm
Q410 - Surge Suppressor Terminal Block
Q620 - Hercules Motor Harness Omni

MAINTENANCE

1. Make sure the gate/door operates smoothly without the operator.
2. Make sure the gate/door track runs smoothly.
3. For chain maintenance, you can adjust the turn buckle.

WARNING: To reduce the risk of SERIOUS INJURY or DEATH:

- Any maintenance to the operator or in the area near the operator must not be performed until disconnecting the electrical power and locking-out the power via the operator power switch. Upon completion of maintenance the area must be cleared and secured, at that time the unit may be returned to service.
- Disconnecting power at the fuse box BEFORE proceeding. Operator MUST be properly grounded and connected in accordance with local electrical codes. **NOTE:** The operator should be on a separate fused line of adequate capacity.
- All electrical connections MUST be made by a qualified individual.
- Do not install any wiring or attempt to run the operator without consulting the wiring diagram. We recommend that you Install an optional reversing edge BEFORE proceeding with the control station installation.
- All power wiring should be on a dedicated circuit and well protected. The location of the power disconnect should be visible and clearly labeled.
- All power and control wiring must be run in separate conduit.
- Before installing power wiring or control stations be sure to follow all specifications and warnings described below. Failure to do so may result in severe injury to persons and/or damage to operator.

FEATURES AND SPECIFICATIONS

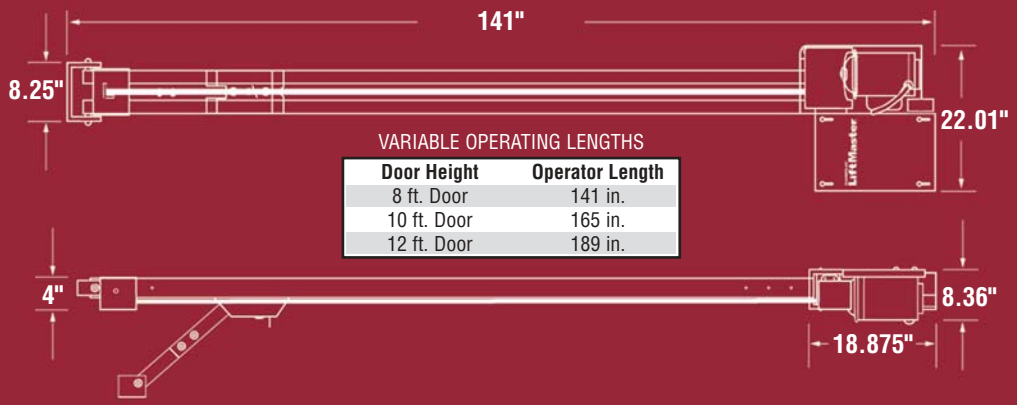

VARIABLE OPERATING LENGTHS

Door Height	Operator Length
8 ft. Door	141 in.
10 ft. Door	165 in.
12 ft. Door	189 in.

CONTINUOUS CYCLE
240 LBS. MAX. PULL
COMMERCIAL DOOR AND GATE OPERATOR

1/2 HP – 120 VAC
1PH – 60HZ – 4.7 AMPS
WEIGHT 123 LBS

MOTOR - 115V 4.1 Amp 1/2 HP instant reversing parking gate Leeson Motor

GEAR BOX - 40 to 1 ratio, lubrication by oil bath gives smooth, quiet operation and features positive gate locking.

NOISE ISOLATOR - Heavy duty rubber attachments isolate vibration, absorb shock and eliminate noise.

TWO WAY REVERSING SENSOR - Can be set for close/open cycles. While closing, if the gate hits an object it reverses; while opening, if it hits an object it stops, then resets itself automatically.

ALARM SYSTEM - Alarm activates anytime the moving gate is physically stopped by an unwanted object.

Use warning sign on front of gate to prevent injury to children.

MODULAR ELECTRONIC CONTROL BOARD - All electronic parts are on a single board.

BALL BEARING SUPPORTS - All wear points run on full ball bearing supports for a long, quiet life.

TROLLEY ASSEMBLY - Chain drive trolley assembly operates on 6 UHMW wheels to eliminate noise, shock and vibration.

FINISHING - All metal parts are gold-zinc plated and powder coated for rust-proof purposes.

EMERGENCY RELEASE - In case of power failure, it can be easily disconnected by a security key.