Programming and Operations Manual

StrongArmPark DC™

DC 10, DCS 10, DC 14, DCS 14

Pad-mounted electromechanical barrier arm operator with
Smart DC Controller

HySecurity®

Simple. Reliable. Secure.®

800-321-9947 • www.hysecurity.com

StrongArm Park DC™

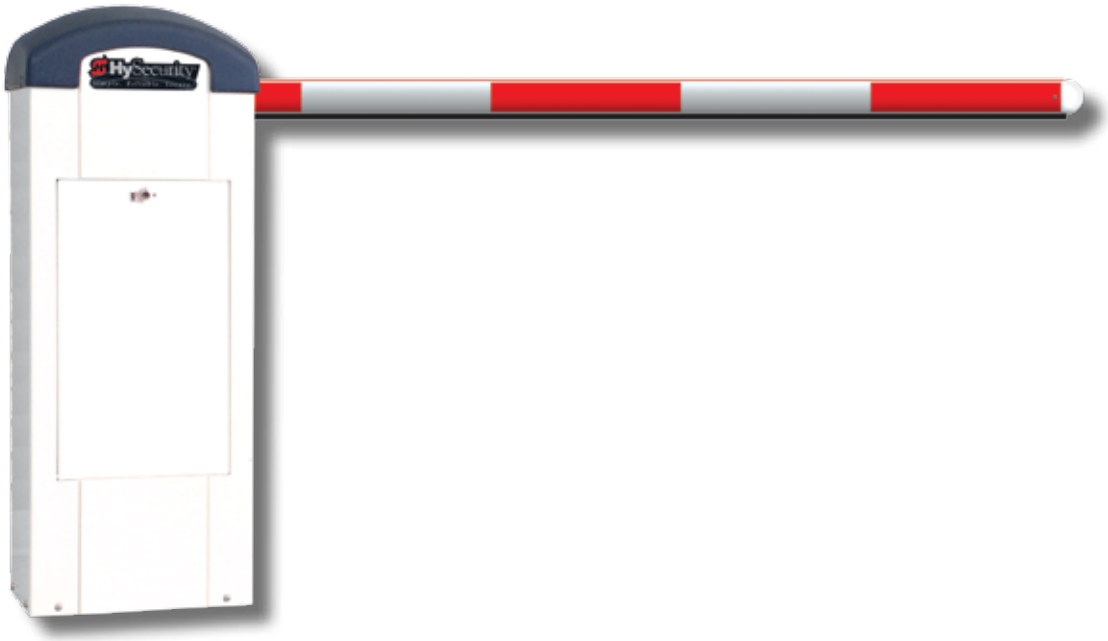

Programming & Operations Manual
with
HySecurity Smart DC Controller

This document provides *Important Safety Information, specifications, and references* along with an overview of programming user and installer menu options, designing vehicle loop layouts, troubleshooting, and maintaining the gate operator.

HySecurity®

Simple. Reliable. Secure.®

StrongArmPark DC Components

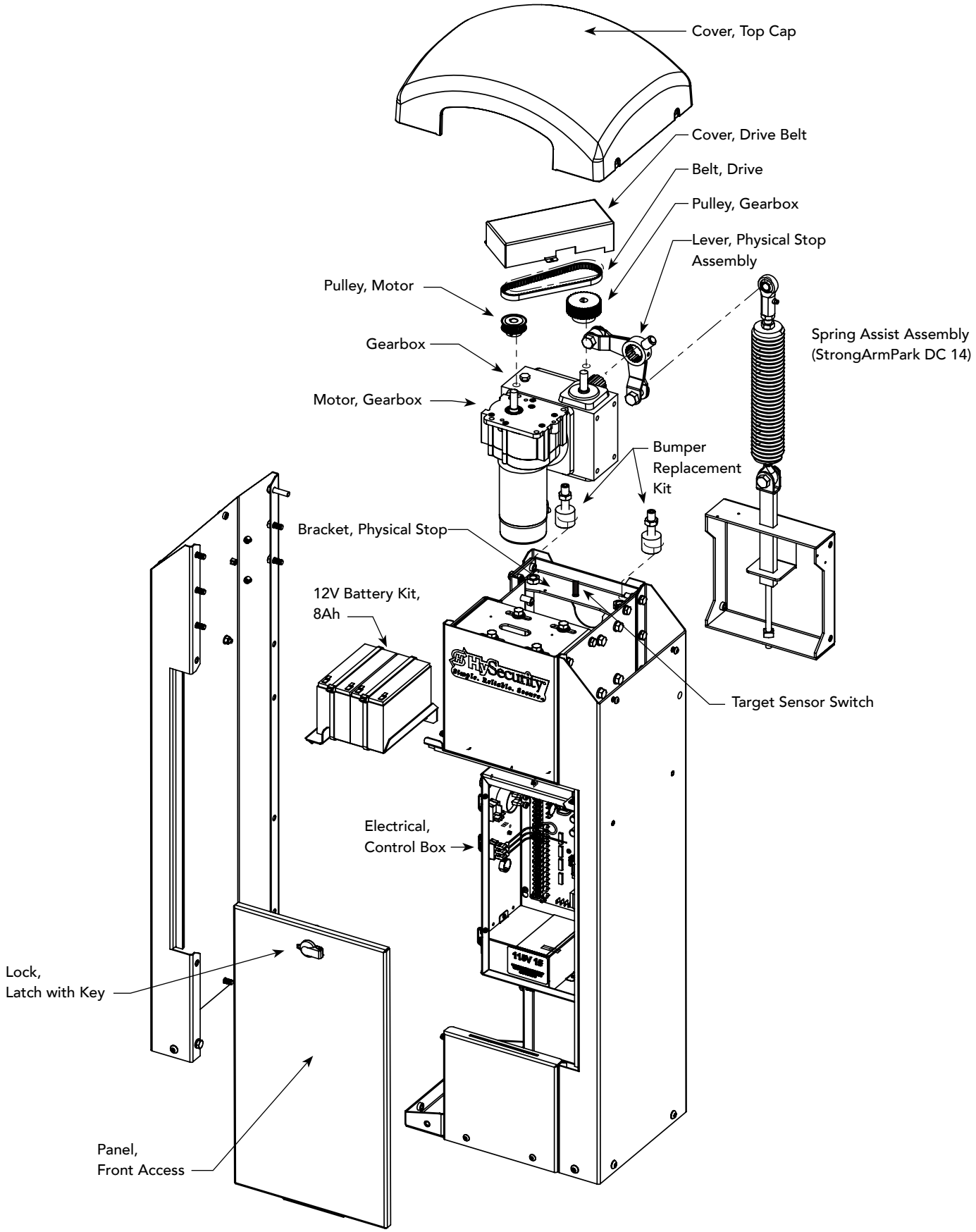

StrongArmPark DC Components

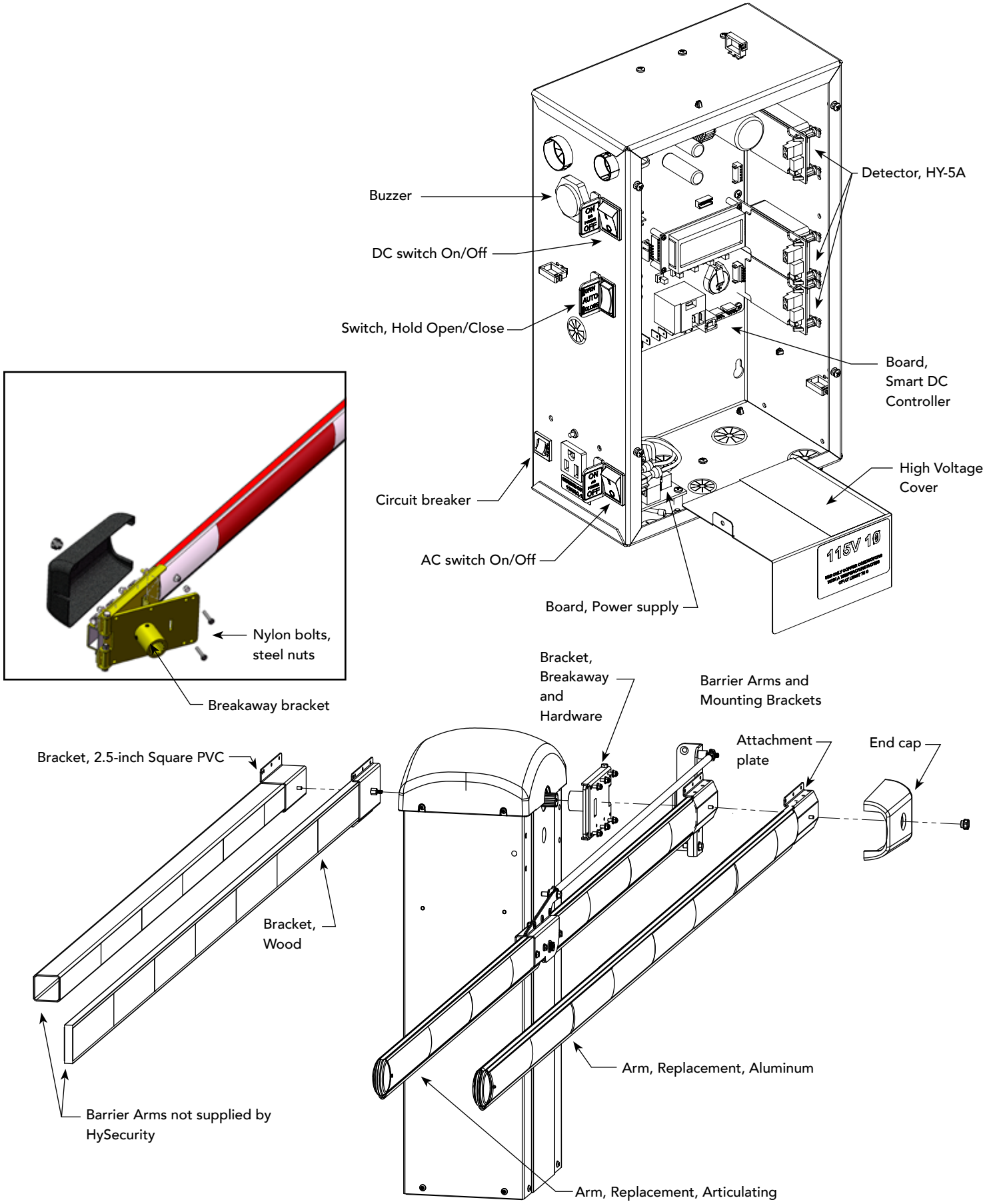

StrongArmPark DC Installer CheckList

The following list provides a high level overview of the tasks involved in installing the StrongArmPark DC gate operator. Take a moment to review the list and check off the items as you complete the install.

- ❑ Site Prep - concrete pad location/dimensions. Use template printed on the side of the sipping box.
- ❑ Make sure gate installation complies with ASTM F2200 Standard Specification for Automated Vehicular Gate Construction. And, install the supplied WARNING signs on both sides of the barrier arm and on its chassis. Signs must be viewable by incoming and outgoing vehicular traffic.
- ❑ Check for compliance with local codes, site conditions, and NEC standards.
- ❑ Install gate operator - (on concrete pad use four ½ - 13 x 3.5in long concrete wedge anchors.)
- ❑ Connect AC Power.
- ❑ Connect red wire to DC Power Switch.
- ❑ Turn DC Power ON.
- ❑ Connect all accessory devices.
- ❑ Set the Close Timer (through the User Menu).
- ❑ Set barrier arm speed, if applicable (through Installer Menu). Refer to S.T.A.R.T. (Smart Touch Analyze and Retrieve Tool) in the Reference section.
- ❑ Set the dynamic reversing sensitivity, if needed (through Installer Menu).
- ❑ Check the Smart DC Controller software version. If necessary, upload the latest version from www.hysecurity.com. See Smart Touch Analyze and Retrieve Tool.
- ❑ Configure changes through the Installer Menu depending on the accessory devices that you have installed.
- ❑ Give a copy of the Important Safety Information and pertinent operator instructions to the end user. Show the end user how to:
  - Remove the barrier arm from the breakaway bracket.
  - Turn the power off and on to demonstrate learn limits after DC/AC cycles.
  - Adjust physical limit stops for barrier arm open and close positioning.
  - Turn the DC power switch off, which disengages the motor, and manually lift the barrier arm open.
- ❑ Take photographs of the completed installation site and save it in your business files.

Contents

StrongArmPark DC Components ii
StrongArmPark DC Installer CheckList iv

Welcome to HySecurity

Contact Information Safety-1
Notices and Bulletins Safety-2
Supplemental Documents Safety-2
Hazardous Materials and Proper Disposal Safety-2

IMPORTANT SAFETY INFORMATION

Safety - Additional Installer Responsibility Safety-4
Safety - Installer's Responsibility, continued Safety-5
Safety - Owner/User Responsibility Safety-5
Identifying Gate Operator Category and Usage Class Safety-6
Choosing Secondary Entrapment Protection Safety-7
Wind Load Factors & Site Prep Safety-8
Manual Release Safety-8
Breakaway Arm Feature Safety-9
Dynamic Reversing Sensor Safety-9
Common Industrial Symbols Safety-10

Power

Installing the Earth Ground 2-1
Wiring AC Power 2-2
- Wiring 115VAC Power 2-3
- Wiring 208/230VAC Power 2-4
- Connecting DC Power 2-5

Turning the Power Switch ON 2-5

Display & Menu Options

Initial Setup 3-1
Understanding the Display and Keypad 3-1
- Menu Mode 3-2
- Menu Mode Navigation 3-2
- Run Mode 3-3
- Viewing Operator Status Displays 3-3

User Menu 3-4
- User Menu: Table 1. 3-4

Installer Menu 3-6
- Installer Menu: Table 2. 3-7

Setting the Time and Date 3-11
Resetting Open and Close Limits 3-12

Learn Open Limits 3-12
Learn Close Limits 3-12
Test the Operator 3-13
Setting the Close Timer 3-14

SDC Inputs & Wiring

Overview of the Smart DC Controller 4-2
Integrating with Security Systems 4-3
Smart DC Controller Inputs 4-4
SDC Terminal Inputs 4-4
Connecting Accessory Devices 4-6
User Relays - Programming Procedure 4-7
Revenue Control Parking Applications 4-10
Extended Relay Module Option 4-11
Vehicle Detector Logic 4-11
Vehicle Detector Logic Mode Selection 4-12
TailGate Alert 4-12
Connecting HY-5A Vehicle Detectors 4-13
Installing Standard 11-Pin Box Type Vehicle Detectors 4-14
Photo Eyes (Non-Contact) Installation 4-15
Compatibility 4-15
Installation 4-15
Configuration 4-16
Photo Eye Connections 4-16
Photo Eye Alignment 4-16
Monitored Connection 4-16
Photo Eye Function 4-16

Troubleshooting

System Diagnostic Messages 5-1
Troubleshooting Codes 5-2
Adjusting the Dynamic Reversing Sensor 5-8
Conditions which affect the Dynamic Reversing Sensor 5-9
StrongArmPark DC Wiring Schematics 5-10
StrongArmPark DC Wiring Schematics - Solar 5-11

General Maintenance

Smart Touch Analyze and Retrieve Tool (S.T.A.R.T.) 6-1
What You Need 6-1
Installing S.T.A.R.T. Software 6-1
Software Maintenance 6-2
Electrical Controls 6-2
Clock Battery Replacement 6-2
Fuse Replacement 6-2

HyProtect™ Breakaway Arm Mount 6-3
Mechanical Maintenance 6-3
Drive Belt Tension and Alignment 6-4
DC Battery Replacement 6-5

Reference

Handing Change 7-1
Spring & Physical Stop Lever Assembly 7-2
Set Handing 7-2
StrongArmPark DC Center Loop Layout 7-3
StrongArmPark DC Center Loop Configuration 7-4
Limited Warranty ..... inside back cover
Specifications ..... back cover

Welcome to HySecurity

Thank you for purchasing our premium StrongArmPark DC™ Gate Operator. At HySecurity Gate, Inc., we pride ourselves on quality.

All operator designs are tested for hundreds of thousands of cycles before being released to the market. Traffic barrier, slide, swing, fortified crash barrier gate and vertical lift operators have all received rigorous testing and certification. Security, low maintenance, flexible configuration, and overall toughness are the foremost criteria for all HySecurity products.

Our commitment to quality and innovation will become evident as the features and performance of the expertly engineered and manufactured StrongArmPark DC become familiar to you. Thank you again for the confidence you've shown in becoming part of the HySecurity family and in choosing a premium industry-leading product.

HySecurity Gate, Inc. Headquarters in Kent, WA

Contact Information

Qualified HySecurity distributors are experienced and trained to assist in resolving any problems. For the name of a qualified distributor near you, call HySecurity at 800-321-9947.

Before contacting your distributor or HySecurity Technical Support, obtain the serial number of your operator.

For information about HySecurity training for installers, maintenance personnel, and end users, refer to the company website at www.hysecurity.com.

Notices and Bulletins

Installers should visit HySecurity's online Technical Support page at www.hysecurity.com or contact HySecurity prior to installing product to make sure they have received the most up-to-date information.

Supplemental Documents

The product literature is comprehensive and contains information needed to plan, install, operate and maintain your gate operator. Additional general information concerning HySecurity gate operators can be obtained from the following:

- HySecurity web site www.hysecurity.com - Contains links to the product catalog, product order form, operator manuals, operator software downloads, technical support bulletins and other useful information.
- S.T.A.R.T. - Smart Touch Analyze and Retrieve Tool - User's Guide (D0049) detailing the extensive software, diagnostic and troubleshooting capabilities of the Smart DC Controller board.
- Technical Bulletins (as applicable).

NOTE: Technical Bulletins are automatically issued to registered users of HySecurity products. The product warranty registration card can be filled out online at www.hysecurity.com.

Hazardous Materials and Proper Disposal

Be aware of the international, federal, and local codes in your area and how best to handle hazardous waste materials.

The pump pack fluid, found in all hydraulic HySecurity operators, can be recycled. Gear oil, found in HySecurity electromechanical gate operators, can also be recycled. If the fluids are mixed or contaminated with any solvents or other chemicals, they become hazardous waste. Hazardous waste requirements for storage and disposal must be followed.

CAUTION

If the gate operator has a battery backup system, the batteries contain materials that are considered hazardous to the environment. Proper disposal of the battery is required by federal law. In the U.S.A., refer to federal EPA guidelines for proper hazardous waste disposal.

IMPORTANT SAFETY INFORMATION

WARNING

Read all the product safety information prior to installation. Automatic gate operators move the gate with high force and can cause serious injury and death! Make sure the automatic gate operator is installed to reduce the risks of entrapment. Verify the gate operator is installed to comply with all safety standards and local and federal regulations.

Understand that you as the site designer, installer, maintenance crew, or owner/user must consider the risks associated with gate operators. Be sure to take responsibility, read, and follow the *Important Safety Information* in this manual and review all the literature that accompanies the product.

Hazards, associated with automatic gates, can be reduced with proper site design, installation, and use. Installers, maintenance crews, and owners/users must read and follow the safety requirements found in the HySecurity product manuals.

It is important that only qualified installers handle the installation of the HySecurity equipment and gate operator. A "qualified" installer has one of the following:

- A minimum of three years experience installing similar equipment
- Proof of attending a HySecurity Technical Training seminar within the past three years
- Significant manufacturer endorsements of technical aptitude in gate operator installation and operation

Underwriter Laboratories (UL) and the American Society for Testing and Materials (ASTM) are responsible for current safety standards and regulations regarding automatic vehicular gate operators. To pass certification, all aspects of gate operator and gate installation must comply with the appropriate safety standards.

For the most up-to-date ASTM F2200 Gate and Fence Standards, refer to www.astm.org.
For UL 325 Safety Standards, refer to www.ul.com.

WARNING

A moving gate or barrier arm, bollard, or wedge can cause serious injury or death. In the following safety information, the term "gate" refers to the hardware that the automatic gate operator is moving: gate, barrier arm, bollard, or wedge.

To reduce the risk of injury or death:

1. READ AND FOLLOW ALL INSTRUCTIONS. Read the gate operator's product manual and review all the product labels and literature prior to installing, operating, or maintaining the automatic gate operator.
2. Never let children operate or play with gate controls. Keep all remote controls, especially radio transmitters, away from children. Do not allow children to play on or around the gate or gate operators.
3. Always keep people and objects away from the gate. NO ONE SHOULD CROSS THE PATH OF THE MOVING GATE. Start the gate operator only when a gate's travel path is clear.
4. Test the gate operator monthly. The gate MUST reverse on contact with a rigid object or stop when an object activates the non-contact sensors. After adjusting the force or the limit of travel, retest the gate operator. Perform routine tests of the entrapment protection sensors, such as photo eyes and gate edges. Failure to adjust and retest the gate operator properly can increase the risk of injury or death.
5. Use the emergency release only when the gate is not moving.

SAVE THESE INSTRUCTIONS

6. KEEP GATES PROPERLY MAINTAINED. Read the product manuals. Have a qualified service person make repairs to gate hardware and replace batteries in accessory or entrapment sensory devices on a regular basis.
7. The automated gate entry is for vehicle use only. Pedestrians must use a separate entrance. Make sure a separate walk-through entrance is nearby. Make certain a clear pedestrian path is designated and signs direct pedestrians to the walk-through gate.
8. Install the supplied WARNING signs on the inside and outside of the gate or barrier gate/operator so they are clearly visible from both the secure and public sides. Installing the signs is a requirement for UL 325 compliance.

Safety - Additional Installer Responsibility

- Verify the gate operator usage class for the site. For all gate operators other than Crash-rated, refer to Identifying Gate Operator Category and Usage Class in the product manual. Install the operator only when the gate operator class is correct for the site, size, and type of gate.
- The gate operator must be properly grounded and the incoming power voltage must match the voltage label on the junction box.
- Install an automatic operator only on gates that comply with ASTM F2200 Gate and Fence Standards. Screen or enclose openings in the gate per UL 325 Safety Standards which include:
  - All horizontal slide gates must guard or screen openings from the gate's base support to a minimum height of 6 feet (183 cm) above the ground. This must prevent a sphere of 2¼-inches (57mm) in diameter from passing through an opening in the gate or the adjacent fence that is covered in the gate's open position.
  - Physical stops must exist in the gate construction to prevent over-travel in both directions and, for slide gates, guard posts must be installed to prevent the gate from falling in the event of a roller failure.
- Before attaching the operator to the gate, move the gate or barrier gate in both directions. Make sure it is level and moves freely. A gate or barrier gate that moves easily reduces strain on operator components. Gravity should play no part in the opening or closing of a slide gate.
- Never over-tighten a clutch or pressure relief valve to compensate for a stiff or damaged gate.
- Make sure all exposed pinch points, rollers and wheels are guarded.
- Reduce the risk of entrapment throughout the entire travel path by making sure the gate is installed in a location which ensures the required clearance between the gate and adjacent structures when opening or closing. On slide gates, minimize the parallel gap between the gate and the fence.
- Install the gate operator on the secure (non-public) side of the gate. Note that swing gates cannot open into public areas.
- Install external entrapment protection sensors so pedestrians are protected from entrapment in both directions of gate travel and all hazard areas are fully protected. On hydraulic gates, set the pressure relief valve at the lowest allowable setting that will reliably operate the gate. The pressure relief valve controls the applied force of the operator and the sensitivity of the inherent entrapment sensor (IES). Note that no IES exists in the StrongArm operator or Crash products.
- Never disable the Warn Before Operate buzzer. This buzzer provides an alert that the gate is about to move.
- Mount access control devices beyond reach of the gate. The control devices that operate the gate must:
  - Be located in a clear line of sight to the gate. Locate controls (Open, Close, Stop/Reset) where a user will have a clear view of the gate.
  - Be mounted beyond 6 feet (183cm) of the gate, to prevent users from touching or accessing the gate while operating the controls. People attempting to access the controls by reaching through or around the gate can be seriously injured or killed by the moving gate.
  - Incorporate a security feature to prevent unauthorized use.
  - Connect radio and other remote access (non-resetting controls) to the RADIO OPTIONS terminal.

SAVE THESE INSTRUCTIONS

Safety - Installer's Responsibility, continued

- Open and close the gate to confirm that it was properly installed and to ensure reduced risk of entrapment. Verify the clearance between the gate and adjacent structures per UL 325 Safety Standards. Have a qualified technician test the gate monthly.
- When you complete the installation, demonstrate the safety features and operation of the gate operator to the end user:
  - Clearly explain and demonstrate the consequences of removing or defeating any of the safety features.
  - Remove the operator cover(s), and then turn the power on and off.
  - Manually release the gate. (Manually release only when the gate is NOT moving.)
  - Use the Emergency Stop Button. (If an emergency stop button is not available, show the user where the Stop button is located on the gate operator.)

  NOTE: Gate operator instructions must be given to the owner per UL 325 Safety Standards.

- Take photographs of the completed installation site and save it in your business files.

Safety - Owner/User Responsibility

As the owner/user, you are responsible for the correct and safe installation, operation and maintenance of the StrongArmPark DC gate operator. It is of the utmost importance that you read and follow the specific instructions and precautions found in the *Important Safety Information* addressed in this manual. In addition, you must adhere to the safety standards of applicable federal, state, and local safety regulations, industry standards, and/or procedures.

NOTICE

For installations outside the United States, make sure that you follow the applicable international, regional, and local safety standards.

- Automatic gates are for vehicular use only; provide and maintain walkways and signs to direct pedestrians to a separate walk-through entrance.
- An automatic gate can start at any time without warning; always keep people away from the gate area.
- Never let children operate or play with gate controls. Keep all remote controls, especially radio transmitters, away from children. Do not allow children to play on or around the barrier arm, gate area, or gate operators.
- Learn how to turn the power on and off. Learn how to manually operate the barrier arm.
- WARNING signs supplied with the gate operator must remain installed and clearly visible on both sides of the gate. The signs are required to maintain UL 325 compliance.

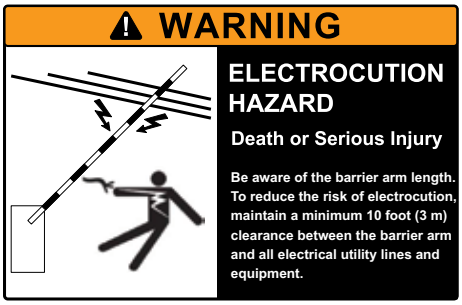

- Do not physically disable the warning buzzer and NEVER disconnect or cut its wires. The buzzer provides compliance with the Manual on Uniform Traffic Control Devices (MUTCD) standards. Disabling the warning buzzer may increase the risk of death or serious injury.
- Be aware of the length of the barrier arm. Safeguard against any possible contact between the barrier arm and overhead power or utility cables and wires.
- Do not remove entrapment devices or any other safety features.
- Have a professional gate installer routinely inspect the gate hardware and test the entrapment protection sensors and overall gate operation. Have a qualified service person make repairs to gate hardware and equipment to keep the gate running smoothly.

SAVE THESE INSTRUCTIONS

Identifying Gate Operator Category and Usage Class

The StrongArmPark DC operator is approved for all the following classes and, according to UL 325 Safety Standards, falls in the Slide Gate and Vertical Barrier Arm category for gate operators. Its usage class is determined by the area that the vehicular gate services.

Four different vehicular usage classes are defined by UL 325:

Class I

Class I: Intended for use in a location of one to four single family dwellings or a parking area associated with one to four single family dwellings.

Class II

Class II: Intended for use in a commercial location or building such as a multi-family housing units (five or more single family units) hotels, garages, retail stores or other buildings servicing the general public.

Class III

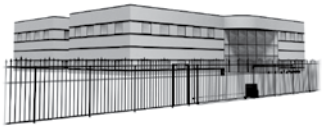

Class III: Intended for use in an industrial location or building such as factories or loading docks or other locations not intended to service the general public.

Class IV

Class IV: Intended for use in guarded industrial locations or buildings such as an airport security area or other restricted access location, not servicing the general public, in which access is monitored by security personnel or via closed circuitry.

Choosing Secondary Entrapment Protection

The site designer or installer determines which secondary entrapment sensor devices will be installed with the StrongArmPark DC operator. The type of entrapment sensor device systems are described below. For a complete listing of the requirements, see UL 325 Safety Standards.

NOTICE: StrongArmPark DC is equipped with a dynamic reversing sensor similar to a Type A primary device. Any impediment to gate travel causes the barrier arm to stop and reverse.

Usage Class	Primary Type Device	Secondary Type Device
Class I, II, III	A	B1, B2, C, or D
Class IV	A	B1, B2, C, D, or E

To comply with UL 325, refer to the chart and take the following steps:

1. Select the Usage Class according to the gate's locale and purpose.
2. The required UL 325 primary Type A sensor is an integral part of the StrongArmPark DC system.
3. Based on the gate's usage class, choose Secondary Type Devices: B1, B2, C, D, or E.

- To comply using B1 - install non-contact sensors (photoelectric sensor or the equivalent).
- To comply using B2 - install contact sensors (edge sensor device or the equivalent).
- To comply using a Type D device requires a CONSTANT HOLD push-button station. This CONSTANT HOLD push-button station must be the only device that opens and closes the gate. It can only be used where the gate and push button station will be monitored by personnel 24 hours a day in full view of the gate area. An automatic closing device (such as a timer, loop sensor, or similar device) must not be employed. A Warning placard stating, "WARNING - Moving Gate has the Potential of Inflicting Injury or Death - Do Not Start the Gate Unless the Path is Clear" must be placed adjacent to the gate operator controls.

CAUTION

While compliance is possible with Type C, which is a low force limiting clutch, the StrongArmPark DC operator does not utilize a clutch, therefore this option is not available.

Similar compliance issues exist with a Type E device (audio warn before operate alarm). A Type E device is permitted as a means of secondary entrapment protection by UL 325 in Class IV applications, but it is not recommended by HySecurity because a buzzer warns, but cannot protect against possible entrapment. HySecurity highly recommends, even for Class IV use, that secondary entrapment protection (edge or photo-eye sensor) devices be installed to detect possible entrapment.

To avoid risk of entrapment, do NOT install operator within two feet (2 ft, 61 cm) of a rigid object.

Wind Load Factors & Site Prep

Wind load is always a factor when considering the appropriate gate for a particular site. Solid gate panels produce a larger wind load than gates with slats or open decorative features. If you are installing a gate operator in high wind areas, the gate design may affect the load on the gate operator. Because wind force acts the same as an obstruction, it is important that gates be designed to present a relatively low surface area for the wind to push on the gate panel.

In the case of the StrongArmPark DC, it is always advisable to remove the barrier arm altogether when high winds are anticipated. Another option is to install a catch post to keep the barrier arm from bending in the wind.

NOTICE: Under certain wind load conditions, damage to the barrier arm or gate operator may occur and is not covered by the HySecurity Limited Warranty.

StrongArmPark DC incorporates a dynamic reversing sensor into its design. More information about adjusting the sensitivity can be found in this manual under, *"Adjusting the Dynamic Reversing Sensor" on page 5-8*. When the barrier arm encounters an impediment, it sends a signal to the gate operator to stop and reverse direction. This feature may be falsely triggered in excessively windy conditions.

Manual Release

NOTICE: Before attempting a manual release, make sure the barrier arm is not in motion.

Make sure and instruct all users how to move the gate manually. Use the Hold Open toggle switch to raise the barrier arm or, in the case of complete AC & DC power loss, turn off both AC and DC power switches and lift the barrier arm to open it.

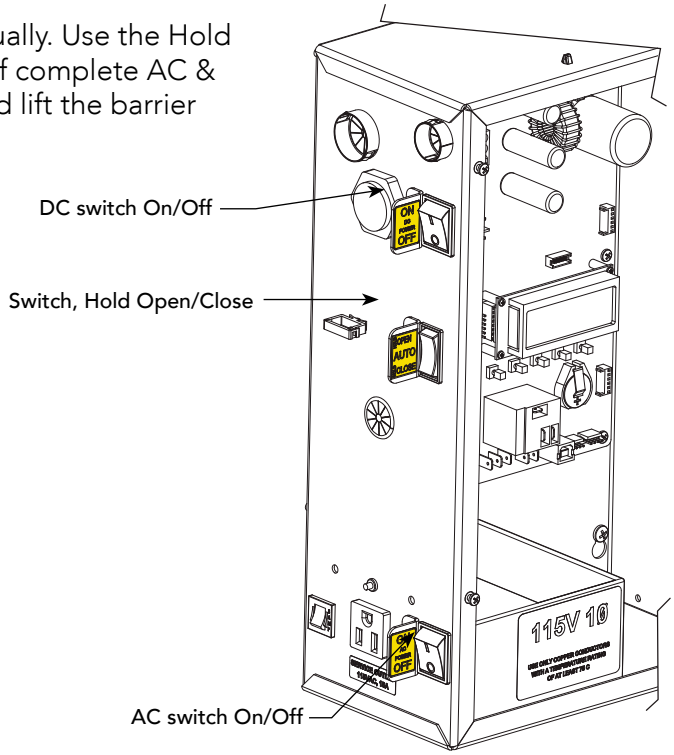

Breakaway Arm Feature

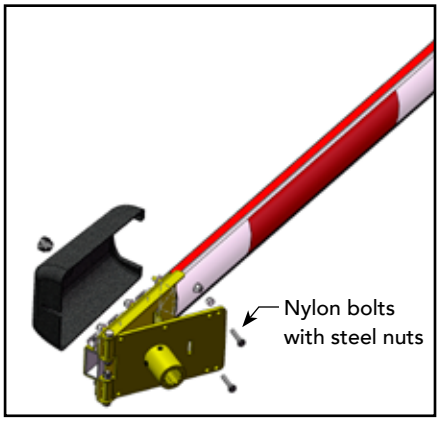

Every StrongArmPark DC operator comes equipped with a breakaway arm bracket, which lessens damage to the operator and reduces the cost of arm replacement due to vehicle hits.

For more information about installing the breakaway arm bracket, review the *StrongArmPark DC Installation Instructions*.

Dynamic Reversing Sensor

The StrongArmPark DC provides an integral feature to help prevent entrapment. While closing, if the dynamic reversing sensor is tripped twice within a specific period of time, it enters safe mode. The operator stops barrier arm travel. For more information, see *"Adjusting the Dynamic Reversing Sensor" on page 5-8*.

Safety Notices

The following four levels of safety notices are used where applicable within this manual; each notice contains information specific to the situation.

DANGER

Indicates death or serious injury will occur if the hazardous situation is not avoided.

WARNING

Indicates death or serious injury could occur if the hazardous situation is not avoided.

CAUTION

Indicates mild or moderate injury could occur if the hazardous situation is not avoided.

NOTICE: Indicates damage to equipment is probable if the hazardous situation in not avoided.

Common Industrial Symbols

The following international safety symbols may appear on the product or in its literature. The symbols are used to alert you to potential personal injury hazards. Obey all safety messages that follow these symbols to avoid possible injury or death.

Attention
- Take Note -

- Danger -
Keep Away

Entrapment
Zone

Possible
Pinch Point

Power

How to wire the operator is presented in the Installation Instructions, but detailed information about the earth and equipment ground, wiring to AC power, DC power considerations and changing the batteries are described in this section.

Installing the Earth Ground

An earth ground refers to the grounding rod and accompanying equipment ground which need to be installed to safeguard against potential electrical shock and damage to personnel and equipment.

DANGER

The potential for lightning discharge exists with all gates, fences and gate operators. National Electric Code (NEC) - Article 250 requires a separate earth ground in addition to the required equipment ground.

HySecurity recommends grounding the operator with a separate earth ground rod (or a similar device in the case of crash products) to shield the operator against electromagnetism and other electrical signals that may cause, erratic operation with, or damage to, the Smart DC Controller and other electrical parts.

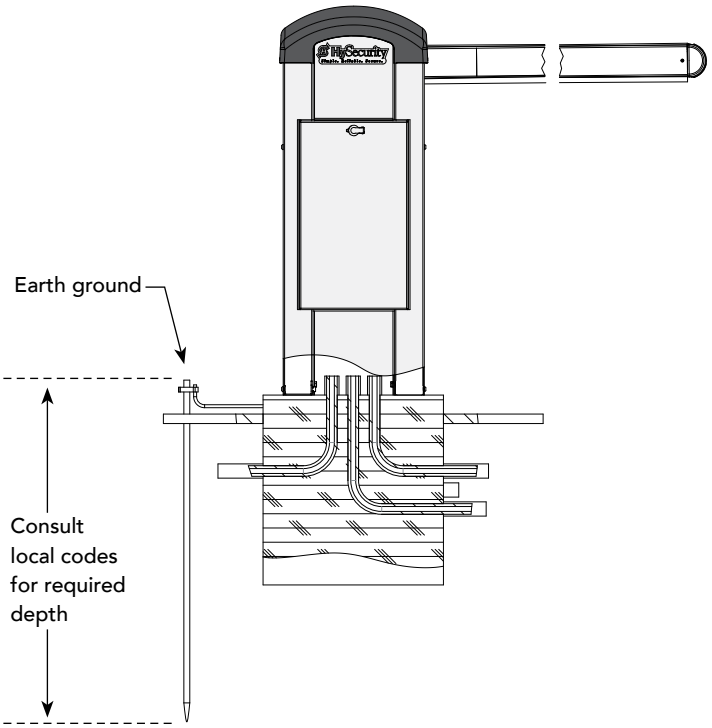

For earth grounding requirements in the U.S.A., refer to the National Fire Protection Association (NFPA) 780 - Standard for the Installation of Lightning Protection Systems. Highlights of the standard include:

- The ground rod must be UL listed copper-clad steel, solid copper, hot-dipped galvanized steel, or stainless steel. Minimum requirements: ½ inch (13 mm) diameter and 8 feet (244 cm) in length.
- The ground rod is driven into the earth (refer to local codes for proper depth requirements).
- The ground rod is electrically bonded to the chassis with a single length of un-spliced 6AWG copper wire less than 3 feet (91cm) long. Due to the large concrete foundation on crash products, make the necessary adjustments to accommodate for earth ground requirements.
- Local jurisdictions may impose other requirements above the NEC, Article 250 and NFPA 780. Consult the local codes and regulations regarding requirements in your area.

NOTICE: Properly grounding the gate operator is critical to gate operator performance and the life of its electrical components. Use sufficient wire size during installation. If you do not ground the operator with a separate earth ground, you risk voiding the HySecurity Limited Warranty.

Wiring AC Power

The StrongArmPark DC has separate Installation Instructions that explain how to connect to AC power. For reference purposes, the same information is provided below.

Size the primary wires. Consider the voltage and length of the wire run from the main power panel. Make sure you have set the voltage selector switch to the proper voltage.

DANGER

Turn OFF AC power at the source (circuit breaker panel) before accessing the wires in the StrongArmPark DC. Follow facility Lock Out/Tag Out procedures. Make sure all power switches are in the OFF position. Follow all electrical code standards and regulations.

CAUTION

Wiring of gate operators must conform to NFPA and NEC standards and comply with all local codes. When the installation is compliant and complete, turn on AC power at the source and power module.

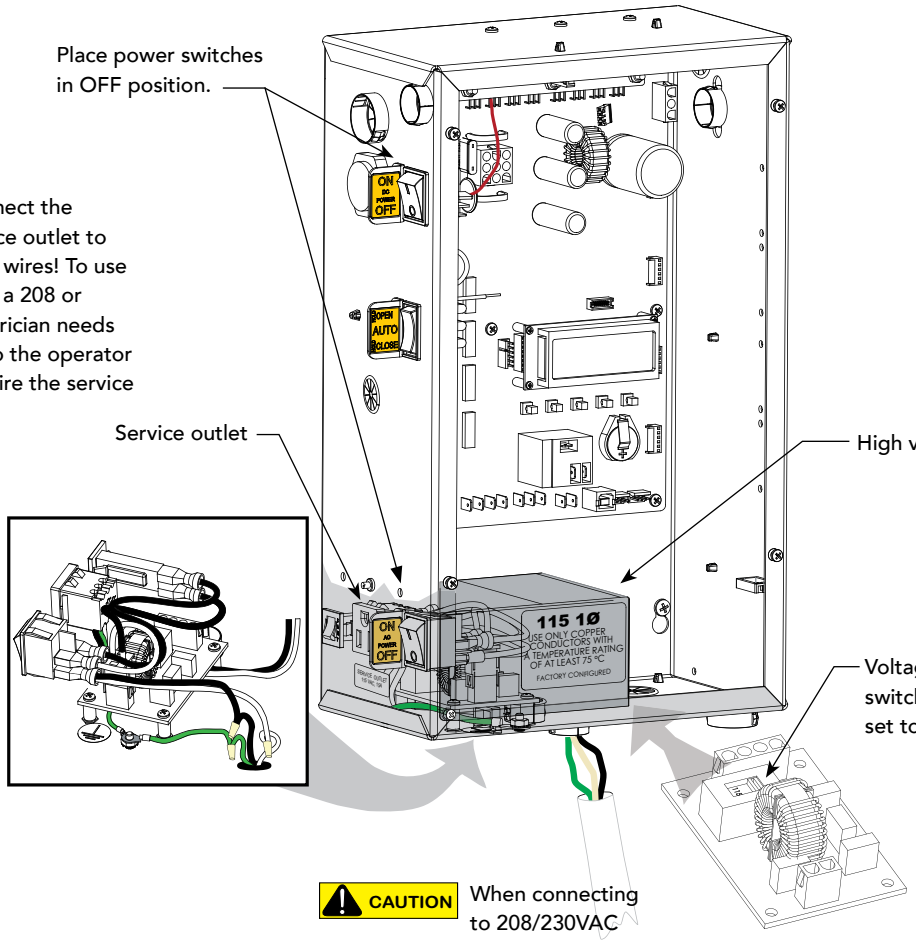

WARNING DO NOT connect the 115VAC service outlet to 208 or 230VAC power supply wires! To use the 115VAC service outlet on a 208 or 230VAC installation, the electrician needs to run an extra neutral wire to the operator from the power source and wire the service outlet per code.

CAUTION When connecting to 208/230VAC power, the voltage selector switch on the AC power board must be moved to the 230V position or damage to the operator will occur and void the Limited Warranty. The label on the high voltage cover must be changed to state 230V.

Wiring 115VAC Power

For standard 115VAC power connection:

Verify AC power supply wires and low voltage (12V & 24V accessory power wires) run through two separate conduits. The higher voltage from the AC power supply may cause interference and anomalies in StrongArmPark DC operation if the high and low voltage wires are routed through the same conduit.

Maximum gate operator current draw is 3 Amps on a dedicated 115VAC circuit (20A dedicated circuit is recommended).

Make sure proper wiring is being used. The following table shows the maximum allowable wire run from the power source to the operator for various wire sizes.

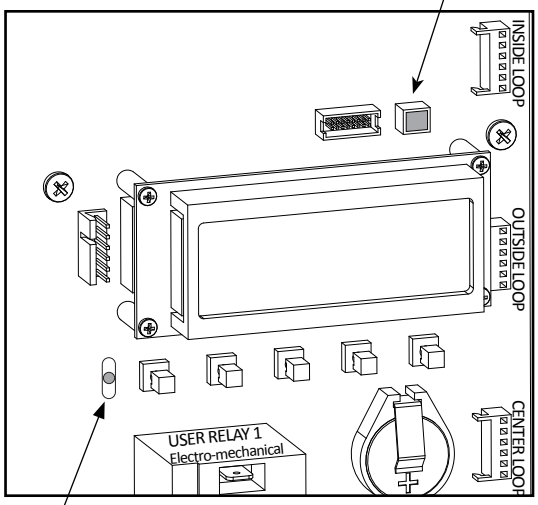

StrongArmPark DC 115VAC: Wire Gauge versus Run			
AC Power	**14 Gauge Wire**	**12 Gauge Wire**	**10 Gauge Wire**
One operator 115V	730 ft (223 m)	1200 ft (366 m)	1900 ft (579 m)
Two operators 115V	460 ft (140 m)	750 ft (228 m)	1160 ft (354 m)

NOTE: Table 2-1 assumes a dedicated circuit with an accessory power load up to 2A.
Additional loads require that the wire size be increased or the distance of the run be decreased.

To connect to 115VAC power, take the following steps:

1. Make sure the AC power is turned off at its source and the DC and AC power switches on the operator are in the off position.
2. Access the input power wires and service outlet wires by removing the two Phillips-head screws that secure the high voltage junction box cover.
3. The service outlet wires are solid copper and are labeled and bound together to keep them separate from the AC power switch wires.
4. Wire nut or crimp bond the power supply wires to the black and white lead wires coming from the AC power switch (no label).
5. Wire nut or crimp bond the equipment ground wire to the green ground wire in the junction box.
6. To activate the 115VAC service outlet, include the black and white outlet lead wires and the green ground wire in the connections made above.
7. Neatly organize all wire connections and replace the high voltage junction box cover. Secure it with the two Phillips-head screws.

Wiring 208/230VAC Power

CAUTION

All StrongArmPark DC operators are shipped from the factory as 115VAC units. When connecting to 208/230VAC power, the voltage selector switch on the AC power board must be moved to the 230V position or damage to the operator will occur and void the Limited Warranty

For the 208/230VAC power connection:

- Verify AC power supply wires and low voltage (12V & 24V accessory power wires) run through two separate conduits as discussed in Wiring 115VAC Power.
- Maximum gate operator current draw is 1.5 Amps on a dedicated 208/230VAC circuit (20A dedicated circuit is recommended).
- Make sure proper wiring is being used. See the chart below.

StrongArmPark DC 208/230VAC: Wire Gauge versus Run			
AC Power	**14 Gauge Wire**	**12 Gauge Wire**	**10 Gauge Wire**
One operator 208/230V	2095 ft (639 m)	3350 ft (1021 m)	5300 ft (1615 m)
Two operators 208/230V	1465 ft (446 m)	2350 ft (716 m)	3750 ft (1143 m)

To connect to 208/230VAC power, take the following steps:

1. Make sure the AC power is turned off at its source and the DC and AC power switches on the operator are in the off position.
2. Remove the High Voltage Protection cover by unscrewing the two Phillips-head screws that secure it.
3. Toggle the voltage selector switch from 115V to 230V.
4. Access the input power wires by removing the two Phillips-head screws that secure the High Voltage Junction Box Cover.
5. Wire nut or crimp bond the power supply wires to the black and white lead wires coming from the AC power switch.
6. Wire nut or crimp bond the equipment ground wire to the green ground wire in the junction box.

DANGER

To use the service outlet with 208/230VAC, a separate neutral wire (white) must be run from the power source. Make sure the incoming power wires are sized appropriately to support the load expected on the service outlet. Follow guidelines per the National Electrical Code Article 250.

7. Neatly organize all wire connections and secure the Junction Box Cover with the two Phillips-head screws.
8. Place the 208V or 230V 1Ø label on the Junction Box Cover over the 115V 1Ø label.

Connecting DC Power

To connect the DC power:

1. Turn off the DC and AC power switches.
2. Slide the plastic cover off the control box.
3. Attach the red spade connector to the battery terminal on the DC power switch.

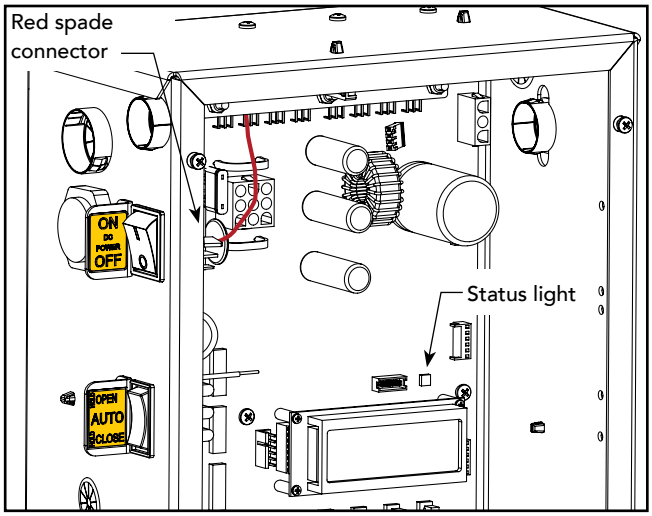

Turning the Power Switch ON

When both DC and AC power switches are turned ON:

- The barrier arm travels open and initiates a target search. StrongArmPark DC senses the arm position and establishes its open and close limits. No physical limit switches exist. Limits are automatically learned and remain intact even if AC power is lost and the batteries are fully drained. The only exception occurs when factory defaults are reinstated, or the Smart DC Controller is replaced. For more information about Learn Limits and Menu modes, refer to "Display & Menu Options" on page 3-1.
- A green status LED appears on the Smart DC Controller and remains static. The status light appears above the display and indicates that the processor is receiving power.

NOTE: The Smart DC Controller can be powered when either switch is turned on. However, the operator is a DC-powered unit and runs on its batteries. If the DC power switch is off, the operator will not function (even though the AC power switch is on). When the operator is connected to AC power and the both AC and DC power switches are turned on, the charge level of the battery is being monitored and maintained. On a solar-powered operator, the AC power switch connects and disconnects the DC power from the solar panels.

The flashing red indicator light next to the OPEN button on the Smart DC Controller is considered the heart beat of the system. It indicates that the electronics board is receiving power. When AC power is lost, the rate of flashing slows down. Another indicator light, above the display, is multi-colored and corresponds to the action that the operator is performing:

- Green - the operator is stopped.
- Flashing yellow - the operator is running.
- Red - the operator has experienced an error.
- Not lit - AC power is lost. Pressing the SHOW LEDs button indicates which inputs, if any, are active. Refer to Figure 4-2 for the SHOW LEDs location on the board.

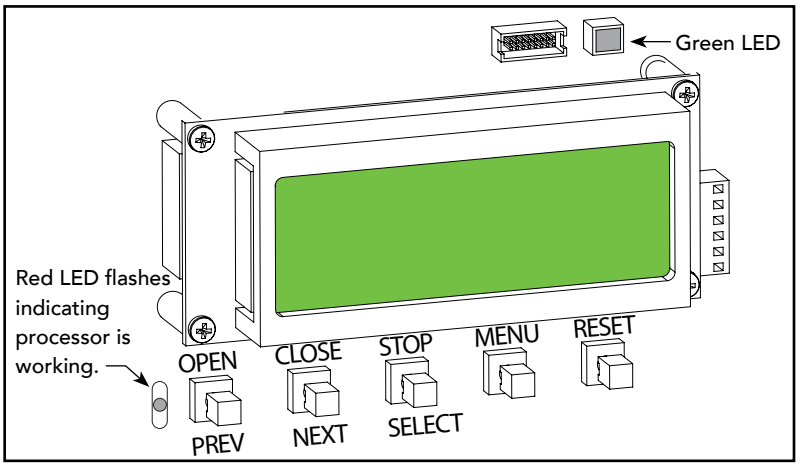

Display & Menu Options

Highly sophisticated software provides three different modes of operation: *run*, *program*, and *fault*. How to navigate using the Smart DC Controller (SDC) keypad, interpret status display codes and program the operator is found in this section.

Initial Setup

Once you have completed the installation, attached accessories and turned power ON, you're ready to program the operator. Two different approaches exist:

- Connect a laptop computer to the serial (RS-232 or USB) port, check for the most current software version and then set the operator menu configurations via the START software. See "Smart Touch Analyze and Retrieve Tool (S.T.A.R.T.)" on page 6-1.

NOTE: Use a laptop computer at your place of business to conveniently download the free START software and most current software version from www.hysecurity.com before heading out into the field. This makes it easy to adjust settings using a laptop.

- Manually navigate through the User and Installer Menus using the SDC keypad. The instructions for performing this second option are provided in this section.

Understanding the Display and Keypad

The SDC display and keypad provide access to the operator's sophisticated software and functionality.

Three different operational modes exist:

- Run Mode - gate is operational, awaiting commands.
- Menu Mode - motor disengages and operator commands are ignored. Data entry, menu navigation, and menu selection can be accomplished via the keypad or through a S.T.A.R.T. software connection using the RS-232 or USB port.
- Fault Mode - alerts, faults, or errors appear on the display. Some errors or faults can be reset with the Reset button while more serious faults require additional troubleshooting. Faults indicate a need for diagnosis and resolution. Refer to "Troubleshooting".

Display in Run Mode: Stop, Open, or Close

The keypad lets you navigate, change, or clear the information in the display menus. The singular use of these keys is dependent on the operator mode.

The buttons with text above and below have two functions. Use these buttons to enter operating commands or navigate through the User and Installer Menus.

Menu Mode

In Menu Mode, the motor disengages and operator commands are ignored. Data entry, menu navigation, and menu selection can be accomplished using the buttons on the Smart DC Controller keypad.

NOTE: Menu Mode automatically returns to Run Mode if no activity (i.e. key presses) occurs for two minutes.

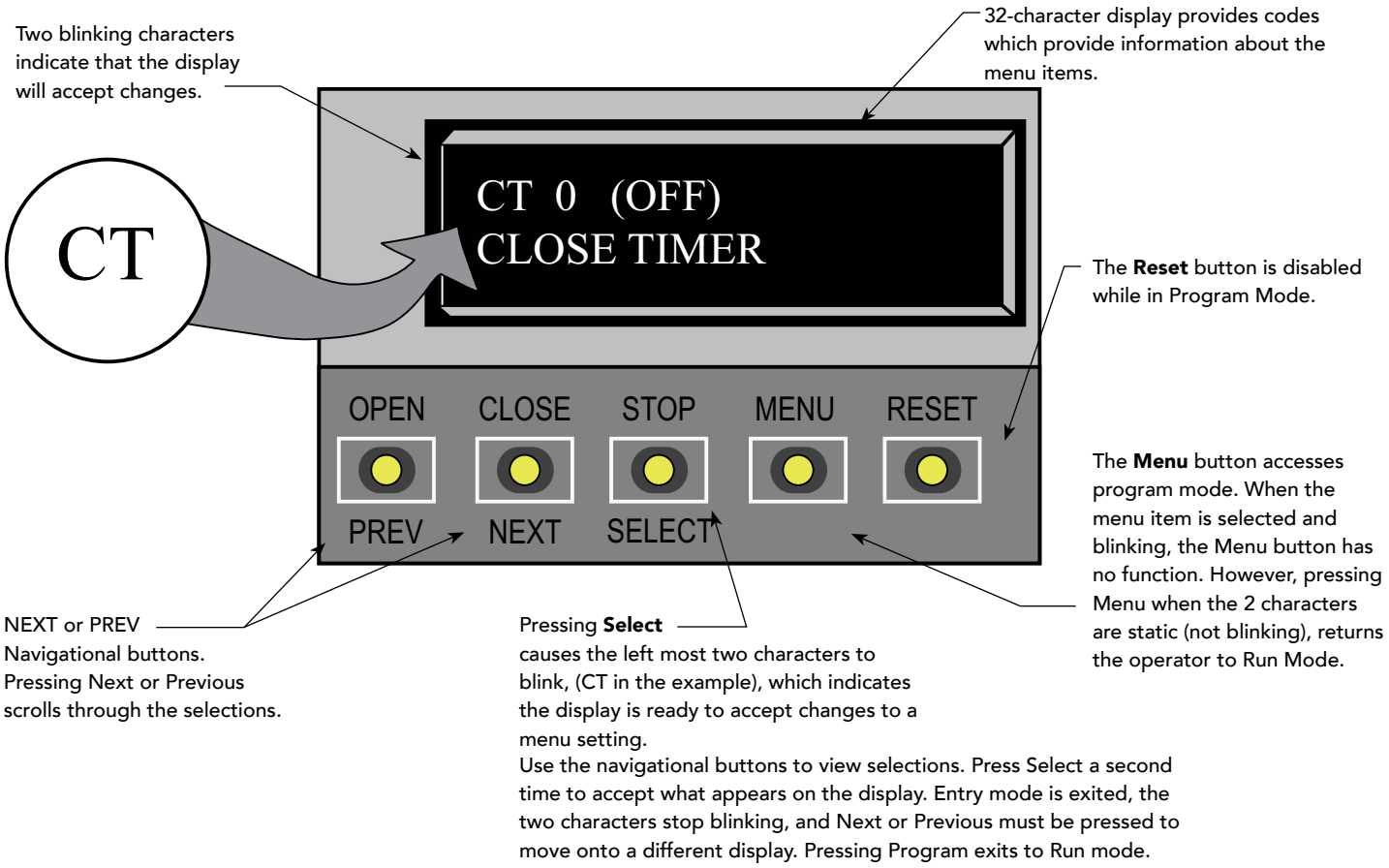

The 32-character LCD display limits what can be communicated with words. If you do not understand the abbreviated word or acronym, please review the "User Menu" and "Installer Menu" sections.

Menu Mode Navigation

Navigating within the program menus is easy once you learn how the keypad buttons function. Refer to the following chart.

Smart DC Controller: Menu Mode Navigation Buttons

To change that data appearing in the display	To navigate through the Selections	To choose what appears on the display	To navigate between menu items
Press Select. Two left characters blink.	Press Next or Previous. Continue pressing Next to view all selections.	Press Select. Blinking characters become static.	Press Next or Previous. Advance - press Next Previous - press Previous

Run Mode

The Run Mode displays appear static when the operator is ready and waiting for a run command. When the display is flashing "GATE OPENING" or "GATE CLOSING", a command has been received and the barrier gate is in motion. The command may come from a variety of sources: a card reader, push-button remote, or recognition of a vehicle passing over a loop detector. In all cases, the operator "runs" the motor when it receives an operational command.

Three displays indicate the position or status of the barrier gate. The keypad entry used to access the User or Installer menus, begins at one of these Run Mode displays.

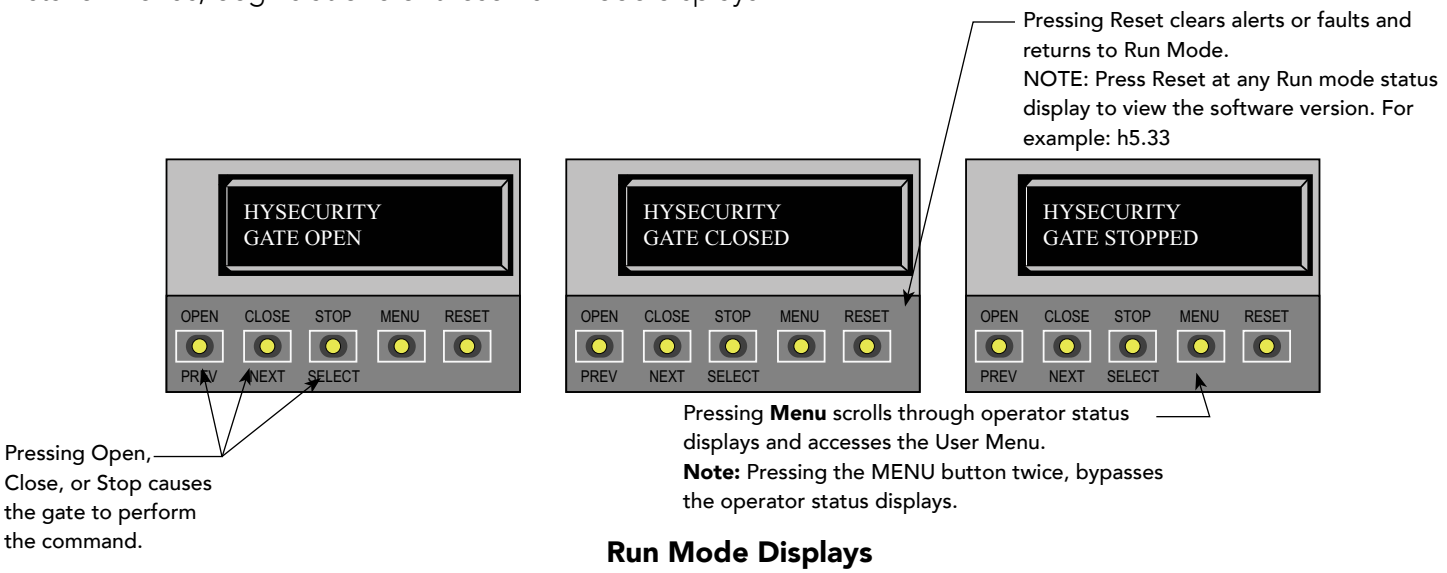

Run Mode Displays

NOTE: To access the User or Installer menus, the motor cannot be engaged and the barrier gate cannot be moving.

Viewing Operator Status Displays

Press the MENU button once and the operator status displays scroll past in two second intervals. Pertinent information appears to provide a quick overview of the operator's status or configurations.

The type of information that may scroll across the display includes: software version, operator type (OT), gate handing (LEFT HAND or RIGHT HAND), buss voltage, and life cycle counter.

Example of Operator Status Displays

User Menu

The User Menu consists of several items which can be modified using the Smart DC Controller keypad.

Access:

Pressing the MENU button, at one of the static Run Mode displays, causes the operator status displays to scroll past, stop and display the first user menu item.

When the Close Timer (or Hold to Close "HC") display appears, it means you have accessed the User Menu. The Close Timer display is the first in a cyclical series of User Menu displays.

NOTE: To access the User Menu, the operator must be in Run Mode. To bypass the operator status displays, press the Menu button a second time.

Use the navigational buttons, Select, Next, and Previous to change or view the menu functions. Table 1 describes the User Menu items and supplies the factory defaults. (Factory default settings shown in bold.)

User Menu: Table 1.

User Menu	Setting Options	Menu Tasks & Explanations	SDC Wire Connections
CT 0 (OFF) Close Timer	**0 = Timer disabled (OFF)** 1 second to 99 seconds	The Close Timer assigns how many seconds before the open gate initiates closure. Keep the setting at 0 if a hard-wired, push-button control device is being used. Refer HC. **NOTE**: When the Hold to Close is set to 1, the Close Timer display does not appear and HC1 becomes the User Menu entry display.	Not applicable (N/A)
HC 0 (OFF) Hold to Close	**0 = off** 1 = on	Set to 0 to produce an gate closure when a momentary signal is transmitted. Set to 1 if a constant hold to close signal, such as a push button control, is being used. A setting of 1 also deactivates the automatic close timer and causes its menu to disappear. The Hold to Close replaces the Close Timer display as the User Menu entry display.	COM Close
HO 0 (OFF) Hold to Open	**0 = off** 1 = on	Similar to Hold to Close, but configures the Open inputs for a constant-hold function. Set to 1, a constant hold to open signal, such as a push button control, must be in use.	COM Open
AP 0 AC LOSS UPS FAIL OPEN	**0 = UPS FAIL OPEN** 1 = UPS FAIL CLOSE 2 = AUTO OPEN 3 = NO CLOSE TIMER	The setting configures how the gate functions when AC power fails.	COM
RO 0 (OFF) Radio Open/Close	**0 = off** 1 = on	A setting of zero, configures radio input for open only. Setting 1 adds the capability for radio input to close the gate, but only when it is fully open.	COM RADIO Open

User Menu	Setting Options	Menu Tasks & Explanations	SDC Wire Connections
BF 0 (OFF) Warn Before Operate	**0 = off** **1 = warning buzzer on throughout Gate travel** 2 = warning buzzer on for 2 seconds of Gate travel	Controls the warn-before-operate buzzer and can be configured three ways: Set to 0: Buzzer is disabled. The buzzer will still beep if alerts, faults, errors, or entrapment occur. Set to 1: Buzzer beeps for 3 seconds before gate moves and continues through entire length of travel. Set to 2: Buzzer beeps for 3s before gate moves and continues for 2s of travel.	Not applicable (N/A)
FA 0 (OFF) Forced Open Alert	**0 = off** 1 = on	Intended for highly secure facilities. Set to 1, the operator sounds the 3-second "warn before operate" buzzer alarm and initiates a closure if the gate is forced open and the closed limit switch disengages. The motor starts to secure the gate. If the gate does not fully close within 4s, the motor turns off and the buzzer sounds for 30 seconds. The display shows ALERT 1 - FORCED OPEN.	N/A
DA 0 (OFF) Drift Close Alert	**0 = off (standard)** 1 = on (detailed)	Set to 1, the operator sounds the 3-second "warn before operate" buzzer alarm and initiates an open command if the gate is forced, or drifts, off the open limit switch. The motor starts to reopen the gate. The motor runs for a maximum of 4s and, if the gate is not fully open at the end of this period, the buzzer sounds for 10s. The display shows ALERT 2 - DRIFT CLOSED.	N/A
PE 0 (OFF) Photo Eye Alignment	**0 = off** 1 = on	Set to 1, the operator serves as an aide in photo eye transmitter/receiver alignment. The buzzer chirps once when the emitter and receiver are not aligned. When the emitter and receiver are aligned, the buzzer chirps twice. If they go out of alignment again, the buzzer will chirp once. The Alignment Mode is reset with a close-limit input or by pressing the Reset button. **NOTE**: If the operator doesn't run when the power switch is initially turned ON, check the alignment of the photo eye and all the photo eye connections.	EYE Open EYE Close EYE COM
CL 0 Set Clock	**0 = Display** 1 = Set Clock	To adjust the hour, minute, day, or month to a different time zone, select 1. Once the clock is set, the display returns to the 0 setting. This feature is useful to read historic operational data, which can be accessed with a computer via the USB or RS-232 port.	N/A
LD 5 LCD Contrast	**5** 0 through 9	Adjusts the contrast of the display. Available settings from low contrast 0 to 9 high contrast, with a factory default setting of 5. **NOTE:** While the Operator Status Displays are scrolling, you also have the ability to adjust the contrast by pressing the PREV and NEXT buttons.	N/A
US 0 CLEAR COUNT	**0 = preprogrammed limit** 1 = Clear Transient count 2 = Clear Tenant count 3 = Clear Special count 4 = All User	Clears the logs (counts) of "user types" entering or exiting through the StrongArmPark DC gate. This menu is used most often in Parking lot and revenue control scenarios. Selecting a number and pressing SELECT again, clears the count.	COM TRANSIENT USER TENANT USER SPECIAL USER

User Menu	Setting Options	Menu Tasks & Explanations	SDC Wire Connections
DS 0 (OFF) Diagnostic Logs	**0 = off** 1 = detailed	Set to 0, the SDC logs pertinent operator events such as faults, errors, or menu manipulation. When experiencing intermittent problems, set this item to 1 to record all operator open and close events, in addition to the normal alert, fault and error logs. This parameter automatically resets to the default 0 (off) after 24 hours.	USB or RS-232 cable and laptop computer loaded with HySecurity free S.T.A.R.T. software is required to read the log file. Visit www.hysecurity.com
PD 0 Set Password	**0 = Off** 1 = On, Set Password	To enter a password (up to 80 characters) for network connectivity, select 1. You can use the menu navigation buttons to enter the password (SELECT, NEXT, SELECT). When the password is set, the display returns to the 0 setting. **NOTE:** A System Address (SA) value in the Installer Menu must be set before the Set Password display can appear in the User Menu.	Network: Ethernet or RS-485

Installer Menu

The Installer Menu options provide more advanced configurations for the gate operators. Access to the Installer Menu is through the User Menu. The navigational buttons are the same in both menu modes.

Access:

While a static Run Mode code is being displayed, press the MENU button twice. (Bypasses the operator status displays.)

When the Close Timer display appears:

1. Access the Installer Menu by simultaneously pressing and holding the RESET and OPEN buttons.
2. Release both buttons and the Learn Limit display appears. The LL display is the first item in the Installer Menu.

NOTE: Installer Menu options can also be configured through the use of a laptop computer and the S.T.A.R.T. software.

Table 2 describes the Installer Menu items and supplies the factory defaults. (Factory settings shown in bold.)

Installer Menu: Table 2.

Installer Menu	Setting Options	Menu Tasks & Explanations	SDC Wire Connections
OT 0 Set Operator Type	**0 = operator type** 12 = SwingSmart DC 20 & DCS 20 Solar 14 = StrongArmPark DC 10 & DC14 DCS 10 Solar & DCS 14 Solar 15 = SlideSmart DC 15 & DCS 15 Solar 16 = SlideSmart DC 10F & DCS 10F Solar	Select the appropriate number for the operator. **NOTE**: This menu item only appears if the Smart DC Controller is being replaced. **CAUTION: If you are replacing an SDC board, remember to transfer the operator's menu settings from the existing board to the replacement board. Refer to the installation instructions that accompany the replacement SDC board.**	Not applicable (N/A)
MN 0 Model Number	0 = model type unknown 1 = Model 10 2 = Model 14	Select the type of StrongArmPark DC model used at the site. **NOTE**: This menu item only appears when you set the OT (operator type).	N/A
LL 0 (OFF) Learn Limit Reset	**0 = Normal setting** 1 = Erases learned limit positions	Set to option 1, the system resets to accommodate for relearning limits.	N/A
UC 0 Usage Class	**0 = gate disabled** 1 = Family dwelling (1 to 4 units) 2 = Multi-family & commercial 3 = Light industrial* 4 = Industrial/guarded secure* *Not serving the general public	Set the UL usage class. The installer must set the usage class for the operator to function. See "Identifying Gate Operator Category and Usage Class" on page Safety-6. **NOTE:** The usage class setting does not appear on StrongArmPark DC and Crash products.	N/A
SH 0 Gate Handing	**0 = gate disabled** R = viewed from the secure side, the arm lifts right to open L = viewed from the secure side, the arm lifts left to open	The handing determines which way the gate opens as you view it from the front access panel. **NOTE:** StrongArmPark DC is factory configured for left handing.	N/A
OS 1 Open Speed	DC10 / DC14 **1 = 2.5 seconds** / **1 = 3.5 seconds** 2 = 2.0 seconds / 2 = 3.0 seconds 3 = 1.5 seconds / 3 = 2.5 seconds	Adjust how quickly the barrier arm opens.	
CS 1 Close Speed	**1 = 2.5 seconds** / **1 = 3.5 seconds** 2 = 2.0 seconds / 2 = 3.0 seconds 3 = 1.5 seconds / 3 = 2.5 seconds	Adjust how quickly the barrier arm closes.	
FD 0 (OFF) Load Factory Defaults	**0 = user settings** 1 = reload factory settings	Select setting 1 to return the operator to factory defaults which globally restores all menu settings back to new operator status. **NOTICE:** If factory defaults are restored, any customized menu settings will need to be reprogrammed. Before loading factory defaults, you can save your customized menu settings using a PC laptop & S.T.A.R.T.	N/A
DG 0 (OFF) Dual Gate	**0 = solo operator** 1 = Slave unit 2 = Master unit 3 = Sally Port A 4 = Sally Port B	Establishes communication after wiring dual gate connections between two operators in Master/Second (Slave) or Sally Port site configurations. This menu item appears if the sequenced gate menu item SG is set at 0 (off).	Dual Gate COM (Gate 1) to Dual Gate COM (Gate 2) A to A B to B
SG 0 (OFF) Sequenced Gate	**0 = off** 1 = Loop Layout/Site #1 2 = Loop Layout/Site #2	Establishes communication after wiring two or more operators as sequenced gates. This menu item only appears if the Dual Gate menu item DG is set at 0 (solo operator). **NOTE:** Access the User Menu in both operators and set a Close Timer.	Connect Dual Gate COM (Traffic Gate) to Dual Gate COM (Security Gate) A to A B to B

Installer Menu	Setting Options	Menu Tasks & Explanations	SDC Wire Connections
CH 0 (AC) Charger Type	**0 = AC powered charger** 1 = Solar powered charger	Assigns charger type. If a solar-powered unit is ordered and delivered factory-ready, this menu will not appear. **NOTE:** Menu item does not appear on an AC-powered operator.	
BT 0 (STANDARD) Battery Type	**0 = standard 8Ah** 1 = extended (50 Ah) 2 = maximum (110 Ah)	Assign the battery type used by the operator. Smaller batteries are charged with less current to avoid overheating and larger batteries are charged with more current to supply a more rapid charge.	Extended and maximum batter-ies require separate housing and wiring.
FO 0 (OFF) Fire Dept Open	**0 = disabled** 1 = enabled	Provides the Fire Dept. Open input and allows a button to activate the emergency open when connected to +24VDC. When set to 1, the open signal received by the operator overrides all pho-toelectric eyes and edge sensors, and opens the barrier arm. Pressing the Reset or Open button is required before the barrier arm can be closed.	+24V Fire Dept Open
SE 0 IES Sensitivity	**0 = Maximum (highest) sensitivity** 1 = Moderate sensitivity 2 = Least sensitivity	Adjusts the sensitivity of the dynamic reversing sensor. Available settings are 0 to 2. Zero is the default and reacts quickly (high sensitivity) to impediments. **NOTE:** For StrongArmPark DC, adjust the spring to prevent false trips prior to changing the sensitivity.	See NOTE.
LC 0 (0.0 SECS) Leaf Delay Close	**0 = none** 1 through 20 For example: 1 = ½ second 4 = 2 seconds 20 = 10 seconds	Delays gate closure. This menu option appears if the gate operator is designated as a dual gate system (Master/Second, for example). Available settings are 1 to 20. Each increment adds **½ second, to a maximum of 10 seconds time delay, before the operator activates when commanded to close.**	DUAL GATE inputs on both operators
LO 0 (0.0 SECS) Leaf Delay Open	**0 = none** 1 through 20 For example: 1 = ½ second 4 = 2 seconds 20 = 10 seconds	Delays gate opening. This menu option appears if the gate operator is designated as a dual gate system (Master/Second, for example). Available settings are 1 to 20. Each increment adds **½ second (with a maximum of 10 seconds) time delay following a command to open before the operator activates.**	DUAL GATE inputs on both operators
EC 0 STOP ONLY Eye Close Logic	**0 = Close eye stops only** 1 = Reverse to full open with barrier gates (2 second reverse to open on swing, slide, or vertical gates)	The default setting is non-reversal if the close photo eye is triggered. A setting of 1 causes the barrier arm to reverse and travel full open if trig-gered while closing.	EYE Close EYE COM (Inputs #14 or #15)
SR 0 (FULL OPEN) IES Sensor Logic	0 = Reverses full open **1 = ½ second reversal (.5)**	The default setting is a ½-second duration reversal if the dynamic reversing sensor is triggered. The optional setting of 0 will cause the gate to reopen fully if triggered while closing.	N/A
PC 0 NO CONTACT Photo Eye Output	**0 = Normal Open PE output** 1 = Normal Closed (supervised)	The default setting is photo eyes with Normally Open outputs. Setting 1 requires a Normally Closed (NC) output which requires both a photo EYE OPEN and a photo EYE CLOSE are connected. If set for NC, the connection is supervised and any open or short circuit fault will generate a FAULT 2 which requires a STOP button reset to re-enable any functions triggered.	EYE OPEN EYE CLOSE 4 wires total: COM/+24 COM/ PHOTO EYE CLOSE

Installer Menu	Setting Options	Menu Tasks & Explanations	SDC Wire Connections
GC 0 NO CONTACT Gate Edge Output	**0 = Normally Open Edge** 1 = Normally Closed	The default setting is edge sensor with Normally Open (NO) output. The optional setting of 1 requires an (NC) output.	COM EDGE
DT 0 FREE EXIT Disable Function	**0 = Disable Free Exit** 1 = Disable Close Timer	Configures the BLOCK EXIT input to disable either the Free Exit Detector function or, alternately, the Timer To Close function. The default setting disables the free exit detector. **NOTE:** The free exit is disabled when the gate is at its closed limit. If the closed limit is not tripped, the free exit continues to work normally.	COM BLOCK EXIT
OR 1 REVERSE Outer Arm Loop	0 = Pause closing only **1 = Enable reversing to open** 2 = Ignore and continue closing	The default is for full reversal when the loop is triggered. A setting of 0 causes the barrier arm to only pause when triggered. Closure begins as soon as the loop is clear again. A setting of 2 is provided for the most secure facilities where it is essential that the loop trigger is completely ignored and the barrier arm continues closing without pause or reversal.	OUT OBS LOOP (OUTER ARMING) COM or connection to HY-5A detector
IR 1 REVERSE Inner Arm Loop	0 = Pause closing only **1 = Enable reversing to open** 2 = Ignore and continue closing	The default is for full reversal when the loop is triggered. A setting of 0 causes the barrier arm to only pause when triggered. Closure begins as soon as the loop is clear again. A setting of 2 is provided for the most secure facilities where it is essential that the loop trigger is completely ignored and the barrier arm continues closing without pause or reversal.	IN OBS LOOP (INNER ARMING) COM or connection to HY-5A detector
DL 1 STANDARD Detector Logic	**1 = Standard** 2 = Quick Close	Configures for faster closure. This selection determines whether the close timer begins to count after vehicles have departed the detector loops or whether the close timer will count down while the loops are occupied. The default setting 1 causes the Close Timer to start when the Center Loop is clear. A setting of 2 causes the Close Timer to start when the open limit switch trips.	Center Loop COM or connection to HY-5A detector
CR 0 REVERSE Center Loop	**0 = Reopen if center loop triggers** 1 = Pause only	The default allows the barrier arm to reopen if the Center Loop detector is triggered during closure of the barrier arm. A setting of 1 causes the barrier arm to only pause when triggered. Closure begins as soon as the loop is clear again.	Center Loop COM or connection to HY-5A detector
CB 0 (OFF) CLD Disable ELD	**0 = Normal operation of Free Exit** 1 = Disable Free Exit	Setting 1 allows an CLD input to disable the Free Exit Detector (ELD) until the barrier arm is fully closed. Used in bi-directional traffic situations.	Center Loop COM or connection to HY-5A detector
CP 0 (OFF) CLD Counts PBO	**0 = Immediate closure** 1 = Provides addt'l open time	The default allows the Center Loop Detector when triggered and released, to close the barrier arm immediately. The optional setting of 1 designates that the Smart DC Controller remember an additional open command if the open input is activated a second time while the barrier arm remains open. (For example, to prevent a vehicle from being stranded).	Center Loop COM or connection to HY-5A detector

Installer Menu	Setting Options	Menu Tasks & Explanations	SDC Wire Connections
EB 0 (OFF) ELD Backoff	**0 = Normal operation of Free Exit** 1 = Back off close function	The default allows normal latch open operation of the Free Exit detector. The optional setting of 1, creates an automatic close function if a vehicle triggers and then backs off the Free Exit Loop detector.	Free Exit Loop COM or connection to HY-5A detector
RL 1 0 DISABLED Relay 1 Logic	**0 = Disabled** 1 to 38 available	Configures the function of the User 1 output relay. It has the capacity to switch both AC and DC loads and can be used for high voltage and/or high current loads. Connect devices directly to the top of the relay: COM and either NO and/or NC contacts. Multiple logic function options exist. See *"User Relays - Programming Procedure" on page 6-8.*	COM User 1 Relay
RL 2 0 CLOSE LIMI Relay 2 Logic	**0 = Disabled**	Relay 2 configures the function of the User 2 output relay, which is an electronic relay with the capacity for switching a DC load only. **NOTE:** In the StrongArmPark DC, it is recommended to use the User 2 Relay for connection to the LED arm lighting.	COM User 2 Relay
RL 3 0 DISABLED thru RL 10 0 DISABLED Relay Logic	**0 = Disabled** 1 to 38 available	Similar to Relay 1 Logic.	COM User 3 through 10 Relay
TL 2 (45 SECS) Open Time Alert	**2 = 45 second delay** 0 = 0s delay 1 = 15s 3 = 75s 4 = 105s 5 = 135s	This menu item only appears if the #8 User Relay function has been selected. It adjusts the time delay before activation of the User Relay function.	User Relay
LT 3 (75 SECS) Loitering Alert	**3 = 75 second delay** 0 = 0s delay 1 = 15s 2 = 45s 4 = 105s 5 = 135s	This menu item only appears if the #13 User Relay function has been selected. It adjusts the time delay before activation of the User Relay.	User Relay
SA 0 (OFF) SDC Address	**0 = No network** 1 to 99 = Network "drop" address	Sets the system address for network communication: 0 = no network communication 1-99 sets individual poling addresses. See PD SET PASSWORD in "User Menu: Table 1." on page 3-4.	RS-485. Involves additional hardware & software.
ELD0 RUN MODE Exit Loop Set	**0 = Run mode** 1 = Show frequency 2 = Show call level 0-7 3 = Set Frequency	Controls the HY-5A Free Exit loop detector.	HY-5A
ILD0 RUN MODE In Arm Loop Set	**0 = Run mode** 1 = Show frequency 2 = Show call level 0-7 3 = Set Frequency	Controls the HY-5A Inside Obstruction Loop (Inner Arming Loop) detector.	HY-5A
OLD0 RUN MODE Out Arm Loop Set	**0 = Run mode** 1 = Show frequency 2 = Show call level 0-7 3 = Set Frequency	Controls the HY-5A Outside Obstruction Loop (Outer Arming Loop) detector.	HY-5A

Installer Menu	Setting Options	Menu Tasks & Explanations	SDC Wire Connections
CLD0 RUN MODE Center Loop Set	**0 = Run mode** 1 = Show frequency 2 = Show call level 0-7 3 = Set Frequency	Controls the HY-5A Center Loop detector.	HY-5A

Setting the Time and Date

A feature of the Smart DC Controller is its 24-hour, 365 day clock. Make sure it is set to the appropriate time zone. An accurate time and date allows the diagnostic log to date stamp operational data which indicates when Alerts, Faults and Errors occur. The log helps in troubleshooting and can be viewed using the S.T.A.R.T. software application via a laptop connected to the USB or RS-232 port. For more information, refer to "Smart Touch Analyze and Retrieve Tool (S.T.A.R.T.)" on page 6-1.

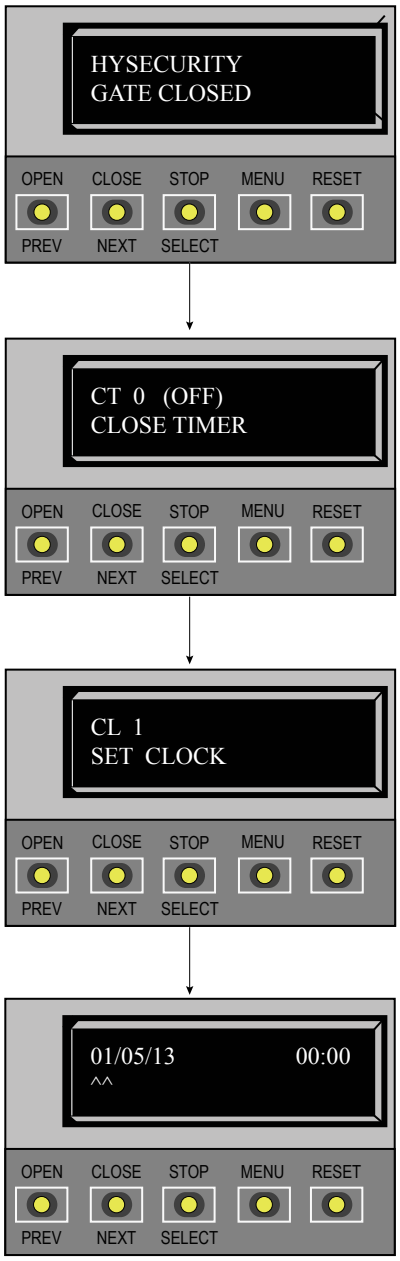

To set or adjust the time or date, take the following steps:

1. At a gate status display, press the MENU button twice. This accesses the User Menu and the CLOSE TIMER display appears.
2. Press NEXT or PREV until the SET CLOCK display appears.
3. Press SELECT.
4. CL blinks.
5. Press NEXT or PREV to change the number to 1.
6. Press SELECT to accept the display.
7. The date and time display appears. Use the SELECT and NEXT buttons in the same manner as before to adjust the date and time.

NOTE: A date or time field must be blinking before it can be changed.

8. To accept what appears on the date and time display, press SELECT.
9. To exit the User Menu, press the MENU button. A gate status appears in the display indicating you have returned to Run Mode.

NOTE: A lithium coin battery supports the clock so the date and time is retained even when the main power is turned off. Replace the battery about every five years with a DL 2025, DL 2032 or CR 2025 or CR 2032 battery. Refer to Clock Battery Replacement.

Resetting Open and Close Limits

Resetting the open and close limits is easily accomplished by accessing the Installer Menu.

Access to the Installer Menu is through the User Menu. See the flowchart below.

Learn Open Limits

1. Press and hold the OPEN button while the degrees increase toward 90 and the barrier arm reaches the desired full open position.

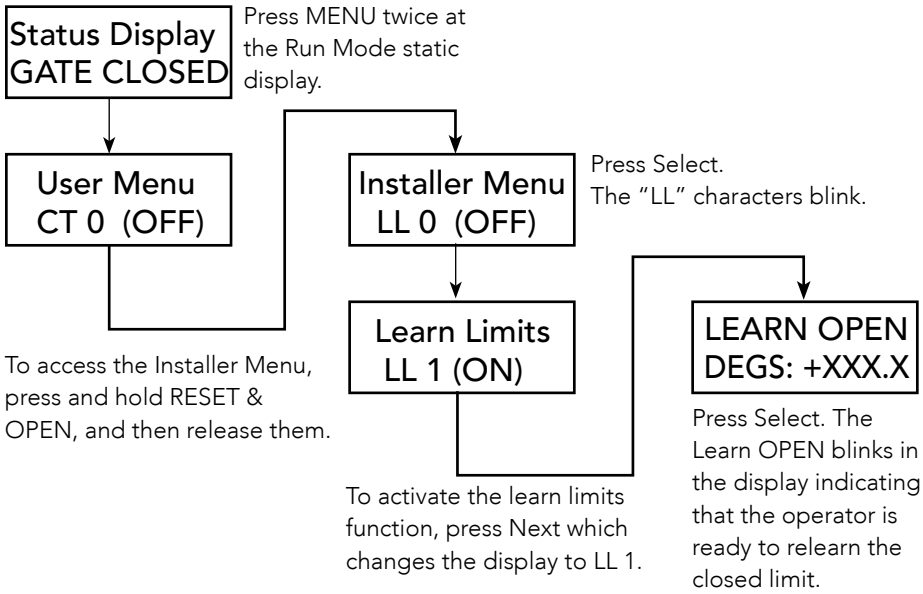

2. Release the OPEN button as the arm nears full open. The motor slows as do the numbered increments on the display. Note that if you go too far, you can press CLOSE to reverse direction.
3. Press STOP twice to preserve the open stop location. The buzzer chirps twice and the full open stop is retained in memory.

Learn Close Limits

1. Press and hold the CLOSE button while the degrees increase toward - 90 and the barrier arm reaches the desired full open position.
2. Release the CLOSE button as the arm nears full open. The motor slows as do the numbered increments on the display. Note that if you go too far, you can press OPEN to reverse direction.
3. Press STOP twice to preserve the open stop location. The buzzer chirps twice and the full open stop is retained in memory.

Test the Operator

Complete the installation by testing the operation of the gate.

NOTE: The operator must be turned on and in Run mode. A Run mode display appears on the SDC. If a Run mode status does not appear on the display, press Reset. If an error, alert, or fault appears on the display, refer to the "Troubleshooting" section to learn how to clear the display and return to Run mode.

1. Press Open to open the barrier arm.
2. Test the operator.
   - Cycle the barrier arm a few times by pressing the Close and Open buttons.

NOTE: If additional accessories are to be added, read about "SDC Inputs & Wiring".

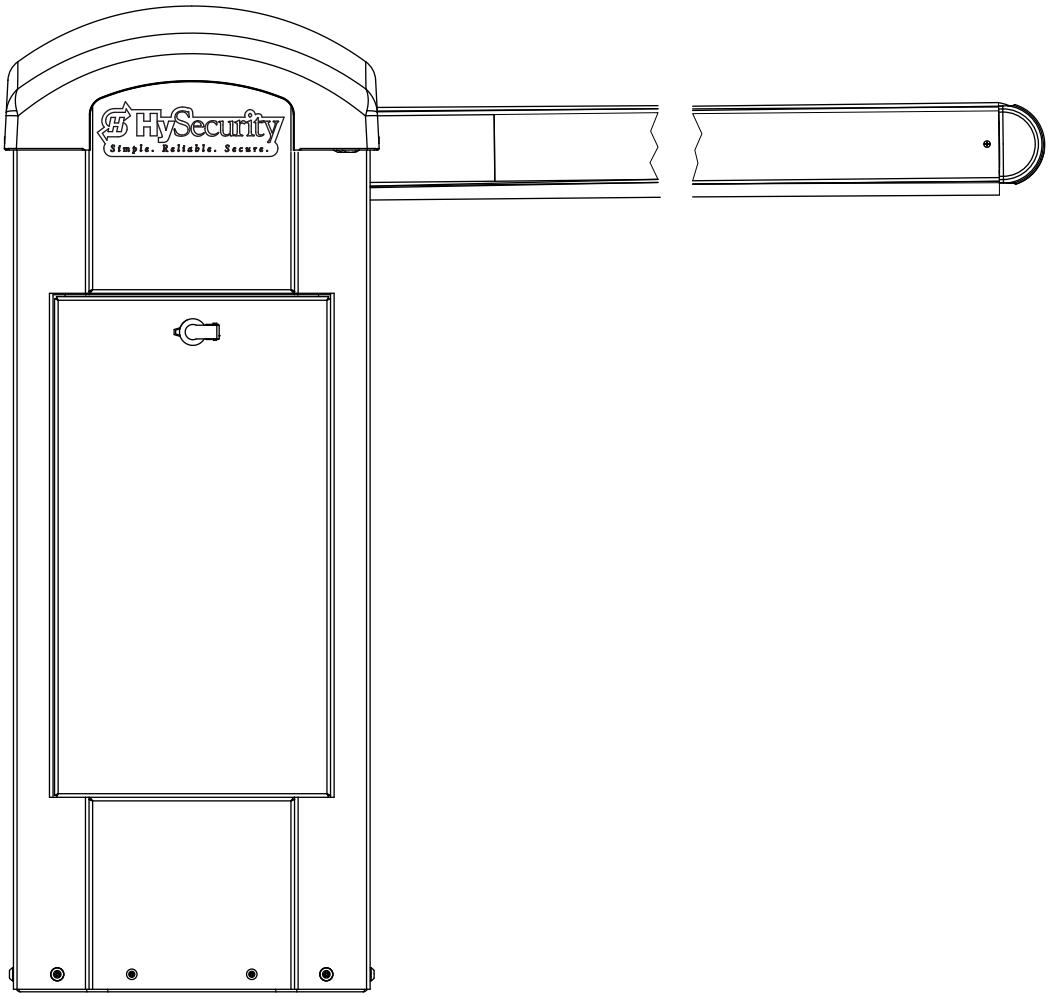

Setting the Close Timer

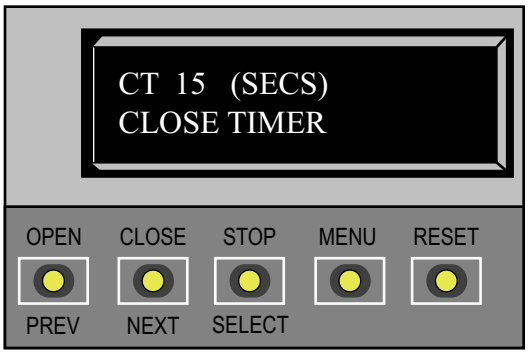

As an added security measure and to make sure the barrier arm closes automatically within a reasonable time frame after all loops are cleared, you must set the Close Timer.

The Close Timer assigns how many seconds will pass before the operator initiates closure of a fully opened barrier arm after all open commands and reversing sensor inputs have ceased and loops cleared. Every gate operator needs to have the close timer set to a specific number of seconds (for example, 5 seconds) unless a hard-wired closing device is connected to the unit, such as a "hold to close" push button station.

To adjust the time (1 to 99 seconds) it takes before the operator initiates gate closure, take the following steps:

1. At a gate status display, press the MENU button twice. This accesses the User Menu and the Close Timer display appears.

   NOTE: If you want gate personnel to operate the gate with the Hold to Close feature found in some push button stations, then set the Hold to Close menu item to 1. When the Hold to Close menu item is active (set to 1), the Close Timer menu item is unavailable.

2. Use the Select, and then Next or Previous buttons to change the number of seconds appearing on the display.
3. To exit the User Menu, press the MENU button. The gate status appears in the display indicating you have returned to Run Mode.

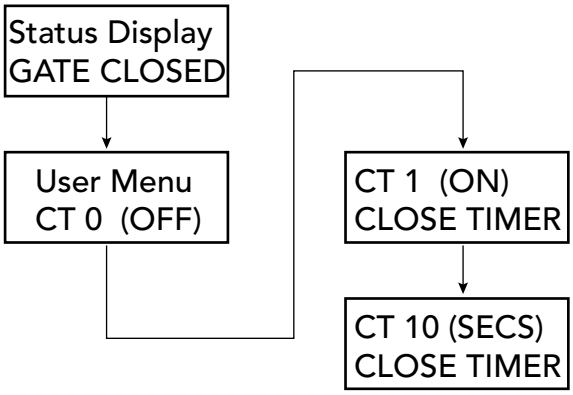

SDC Inputs & Wiring

This section provides information about the Smart DC Controller, its inputs for peripheral connections, and its monitoring capabilities. This section explains how to:

- Make Connections on the Smart DC Controller
- Integrate with Security Systems
- Connect HY-5A Vehicle Detectors
- Connect Accessory Devices
  - Entrapment Sensor Connections
  - Access Controls
  - User Relays

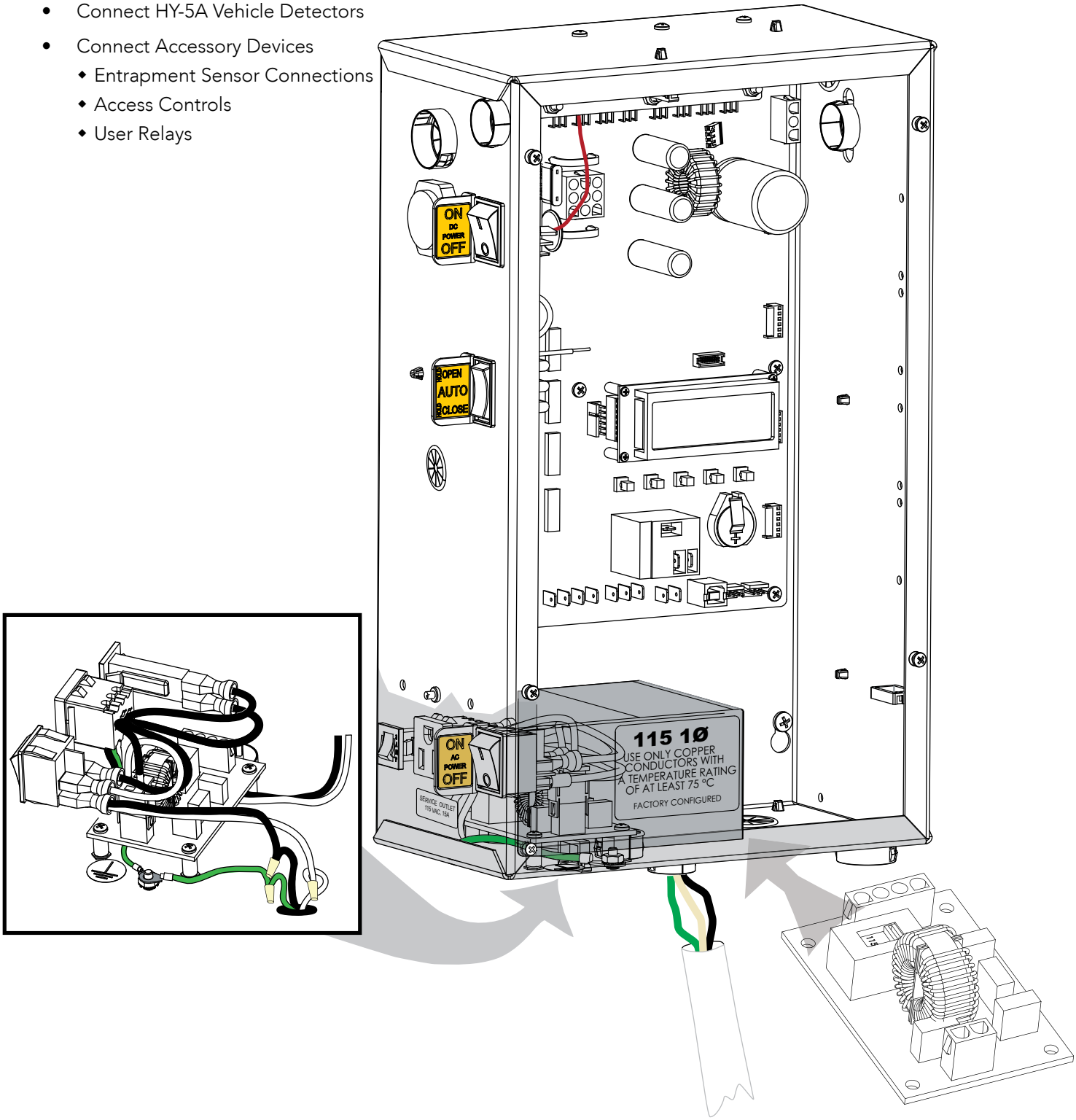

Overview of the Smart DC Controller

The Smart DC Controller uses LED's to indicate active inputs when AC power is present. For operators that use only DC power, you can push a button to show the active inputs. This SHOW LEDS button is at the bottom left corner near the EMERG OPEN input.

On a new operator no active inputs should appear until external accessories and wiring are attached. If any inputs are active before connecting external wiring, refer to Troubleshooting.

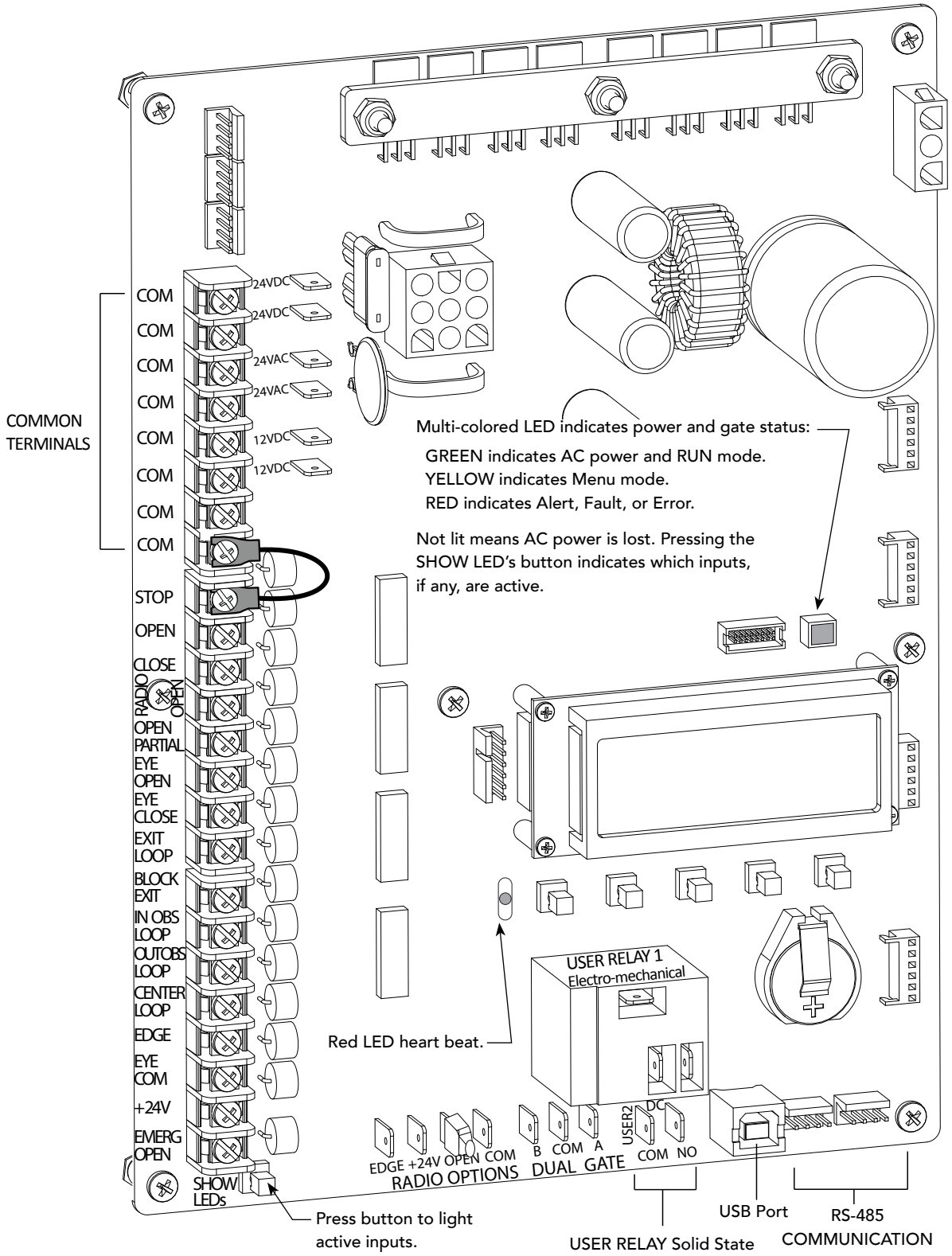

Integrating with Security Systems

HySecurity gate operators provide a serial interface (RS-485 connection) which allows remote access to one or more operators. With software protocols provided by HySecurity, bi-directional status updates and control commands are easily integrated with a central controller (computer or server), which becomes the master to the connected operators. Several physical operators (1 to 99) can be polled from the central master command station. Reset requests, gate control, gate status, and gate faults can be monitored and information can be retrieved from the central command station.

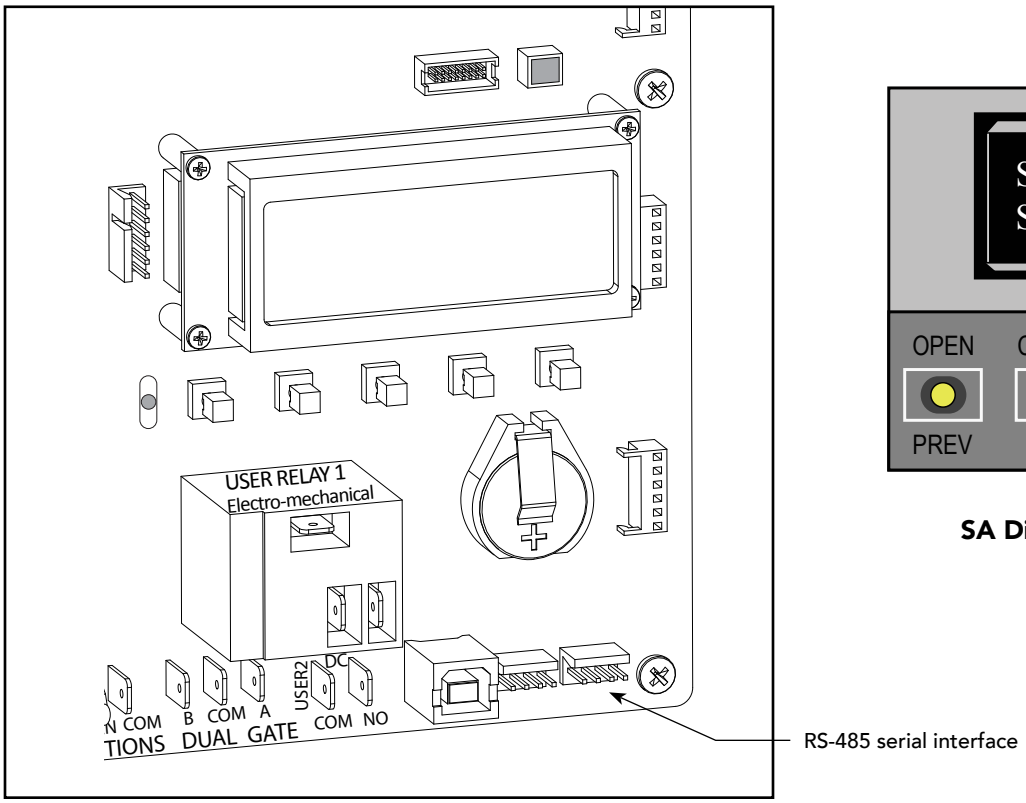

Smart DC Controller

SA Display in the Installer Menu

When the physical connection is made and protocols are established, an SA (System Address) must be assigned for each operator through its Installer Menu. For network communication, choosing a SA of 1 to 99 establishes individual network polling addresses. An SA of zero means no network communication is desired.

If you plan to connect operators to a networked central master command station, contact HySecurity for software protocols and additional information. Refer to "Contact Information" on page Safety-1.

Smart DC Controller Inputs

When using AC power, an LED lights next to active inputs. On a new operator, no active input should appear until external accessories and wiring are attached. If any inputs are active before connecting external wiring, refer to "Troubleshooting" on page 5-1.

1. Test the open and close function of the barrier arm before wiring to accessory devices (external control inputs).

   NOTE: If you are using the operator strictly in a DC capacity, the Smart DC Controller has a tact button you can push which lights an LED next to the active inputs. This button is in the bottom left corner of the SDC board. Press the SHOW LEDs push button to verify the status of the terminal inputs.

2. All control device inputs listed below are shown as a single input. In most cases, the second wire is connected to one of the eight Common Terminal Bus (COM) on the Smart DC Controller board.

   NOTE: The Emergency Close and Fire Dept. Open inputs are an exception and require a +24V input, as well as activation in the Installer Menu. For convenience, a +24V is located next to the EMERG OPEN terminal.

SDC Terminal Inputs

NOTICE: A label on the Control Box indicates the change in inputs for revenue control sites. Refer to "Revenue Control Parking Applications" on page 4-10.

SDC Inputs Chart

Label	SDC Terminal	Wire Connections	Commonly used for...
COM	COM	Common terminal. all user inputs are energized when connected to common except Emergency Open.	All inputs except Emergency Open.
STOP	Stop* Button	Normally Closed input. Jumper to Common if input is not being used.	Line of sight, external stop button or 3-button station.
OPEN	Open* Button	Normally Open (N.O.) input. Do not use for radio or remote access controls.	Line of sight, external open button or 3-button station.
CLOSE	Close Button	N.O. input. Do not use for radio or remote access controls.	Line of sight, external close button or 3-button station.
RADIO OPEN	Remote Open & Radio Control	N.O. input. For radio/remote open device: Access the RO from the User Menu and set to 1 for close function too.	Remote access control or radio controls
OPEN PARTIAL	Open Partial	Normally Open (N.O.) input.	Supervised access controls

Label	SDC Terminal	Wire Connections	Commonly used for...
EYE OPEN	Eye Open	Spare input for StrongArmPark DC only. N.O. input for SlideSmart DC & SwingSmart DC. Connection for Photo Eye Open direction. Can be changed to a monitored Normally Closed (N.C.) contact through the Installer Menu	Non-contact entrapment sensors.
EYE CLOSE	Photo Eye Close direction	N.O. input. Connection for Photo Eye Close direction. Can be changed to a monitored Normally Closed (N.C.) contact through the Installer Menu.	Non-contact entrapment sensors.
EXIT LOOP	Free Exit Vehicle Detector	N.O. input. Connection for free exit vehicle detector.	Vehicle detector, box type connections for free exit loop.
BLOCK EXIT	Block Free Exit vehicle detector or Close Timer	N.O. input. Free Exit is only disabled if Close Limit Switch is tripped.	Installer menu enabled. See DT 0 If the gate is partially opened, the Free Exit detector will trigger the gate to open fully. The input can be converted in the Installer Menu to alternately disable the Close Timer.
IN OBS LOOP	Inside Obstruction/ Arming Vehicle Detector	N.O. input. Inside reversing loop.	Vehicle detector, box type connections inside reversing loop
OUT OBS LOOP	Outside Obstruc-tion/Arming Vehicle Detector	N.O. input. Outside reversing loop.	Vehicle detector, box type con-nections outside reversing loop
CENTER LOOP	Center Loop (Shadow) Vehicle Detector	N.O. input. Center Loop for StrongArmPark DC. Shadow function used for Swing gates only.	Vehicle detector, box type con-nections. Shadow function for swing gates, reset function for barrier arm gates.
EDGE	Edge Sensor	N.O. input. One input works for both directions of travel. It can be changed to N.C. contact through the Installer Menu.	Gate edge, entrapment device sensor connections. One input works for both travel directions.
EYE COM	Photo Eye Common	When the Photo Eye Open and Photo Eye Closed common wires are connected to this terminal, the photo eyes energize only when the motor runs.	Photo eye connections. Use these terminals to preserve battery power.
+ 24	+24V DC	24VDC power.	Convenient 24VDC power for photo eyes or the Emergency Open input.
EMERG OPEN	Emergency Open (Fire Dept.Open) **	N.O. input.	The Emergency Open must be enabled via the Installer Menu. It is energized by connecting to the +24V terminal above it. The EMERG OPEN overrides photo eye & edge sensor commands.

* Do not connect an external control to the STOP or OPEN inputs unless the controls are located in clear view of the entire gate area. Use the RADIO OPEN input or RADIO OPTIONS spade connections for all out-of-sight controls, such as a telephone entry or radio operated controls.

**The Fire Department Open control must be keyed or guarded so that it can only be used by authorized personnel.

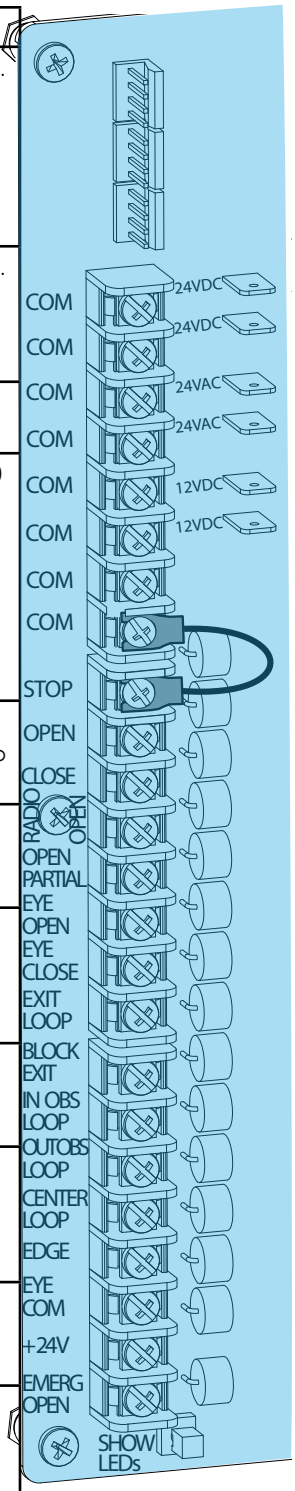

SDC Inputs

Connecting Accessory Devices

Devices, such as gate edge sensors and photoelectric beams, must be installed to protect against entrapment. These secondary entrapment protection devices are required for the gate installation to be in compliance with UL 325 Safety Standards. Most Crash gates are site-specific when it comes to safety standard compliance, and power requirements fall under UL 508A. Always check your local area codes and comply with all regulations.

Standard accessory (entrapment and loop wire) connections are shown in the following illustration. All accessories require a minimum of two connections:

- a device input
- a Common Bus Terminal (COM)

Three power supplies (2 terminals each)are available for peripheral connections: 24VAC, 24VDC & 12VDC

NOTE: Each power supply (and its corresponding terminals) can be used in any combination to draw the available 1A maximum.

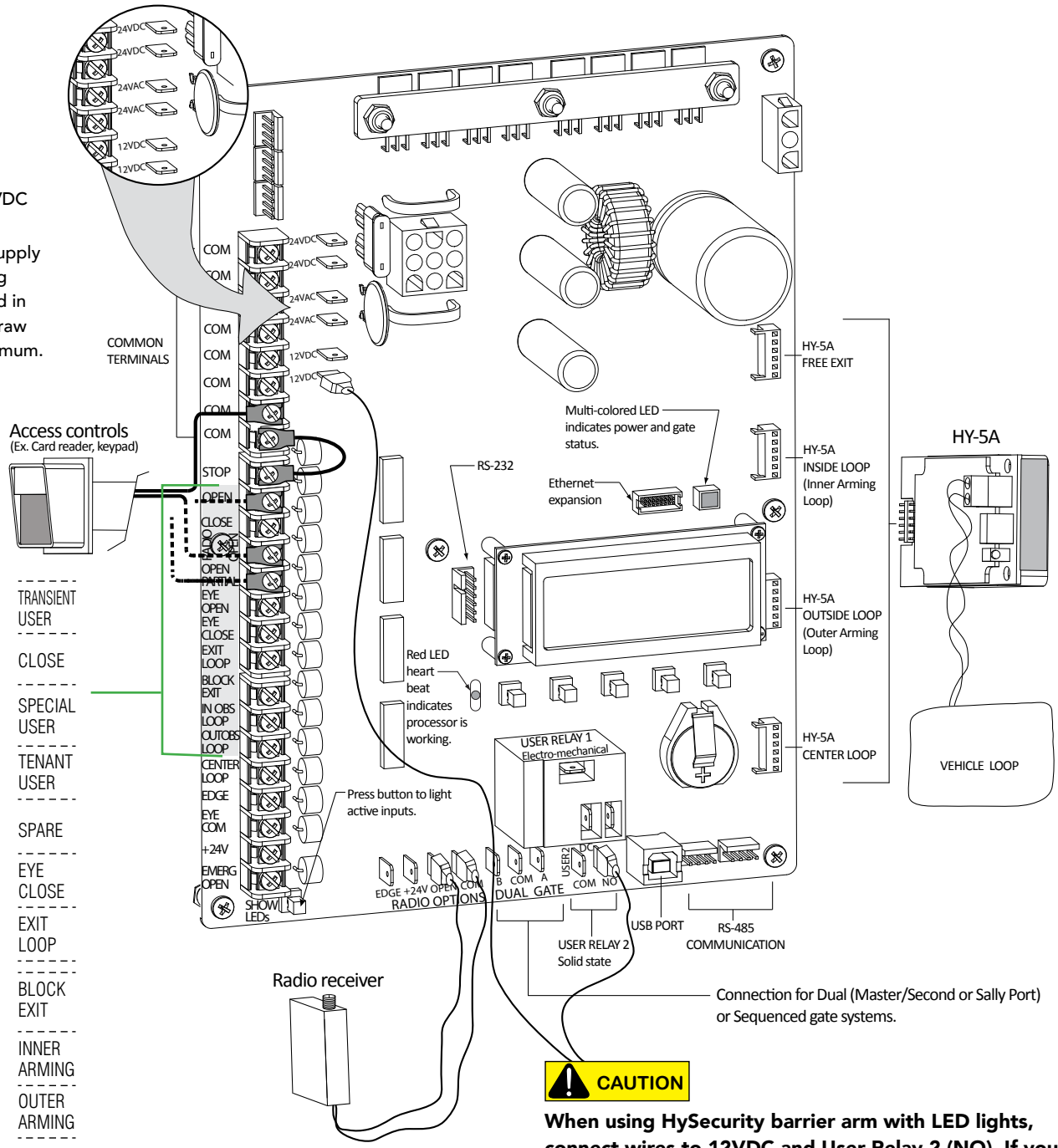

Parking Site Use

The label for the Smart DC Controller accommodates arming loops and establishes which open commands need to be wired for vehicle counts (transient, special, and tenant "user types").

The software identifies the access control inputs and uses the arming loops to control relay and network outputs.

TRANSIENT USER
CLOSE
SPECIAL USER
TENANT USER
SPARE
EYE CLOSE
EXIT LOOP
BLOCK EXIT
INNER ARMING
OUTER ARMING

NOTE: The most current software must be loaded on your Smart DC Controller and the operator identified as OT 14 for the Parking Site labeled inputs to be effective.

CAUTION

When using HySecurity barrier arm with LED lights, connect wires to 12VDC and User Relay 2 (NO). If you connect the wire lead to 24VDC, damage to the arm lights will occur and void the Limited Warranty.

User Relays - Programming Procedure

The Smart DC Controller is able to interface with many types of external devices through the use of programmable output relays: one mechanical relay (User 1) and one solid state relay (User 2) which is used most often for connection to flashing devices.

NOTE: For StrongArmPark DC, an extended relay module option provides 8 additional mechanical relay connections. In the chart below, you use Relay 3 Logic through Relay 10 Logic for wire connections.

All of the user relay functions identified and described in the table below are accessible in the Installer Menu selections.

NOTE: A setting of zero disables a user relay. The user relays will operate normally to 18VDC. Below 18VDC, alert notification occurs. On StrongArmPark DC the R2 RELAY 2 LOGIC is recommended for LED arm lights.

Use the SDC buttons to program the user relays according to the following steps:

1. Select the relay you wish to use through the "Installer Menu: Table 2." on page 3-7.
   For example: R1, RELAY 1 LOGIC.
2. Select the appropriate function (1 through 39) by changing the display to the associated number listed in the table. Use the Select, Next and Previous buttons to make your selection. See "Menu Mode Navigation" on page 3-2.

Programmable User Relays: Table 4

Relay No.	Name	Description	Wire Connection
1	Close limit output	Output can be used as an interlock signal to another operator's interlock input, or simply to indicate that the gate is secure. The relay is "off" when the gate is closed. The relay energizes when the fully-closed limit is released. (Any open command energizes the relay.)	Relay 1
2	Close limit pulse output	Used in a sequenced system to command a second operator to close. Generates a brief pulsed output that occurs when the close limit is triggered.	Relay 1
3	Open limit output	Indicates a full-open position. This output becomes active when an open-limit is triggered and deactivates when the open-limit is released or a close command is received.	Relay 1
4	Open limit pulse output	Used in a sequenced system to command a second operator to open. Generates a brief pulsed output that occurs when the open limit is triggered. An additional pulse is also generated with any new open command even when the gate is already fully-opened.	Relay 1
5	Warn before/during operate output	Controls an external warning device. This output operates at the same time as the internal warn before operate buzzer.	Relay 1

Relay No.	Name	Description	Wire Connection
6	Gate Lock output	Controls external solenoid or magnetic locks. In both directions of travel, this output is activated about 7/10ths of a second before the operator starts moving the gate and remains active while moving. Output remains active, for a few seconds, after stopping.	Relay 1
7	Gate forced open output	Controls an external warning device. Activated if the gate is forced off the closed limit switch and the operator is not able to restore the gate to full closed position within four seconds. **NOTE:** This alarm resets itself in 30 seconds.	Relay 1
8	Gate open too long output	Controls an external warning device. Activates when the gate is open longer than the user-selected period of time. Adjustable from 0 seconds with 15 to 135s selectable delay timeframes in 30s increments. **NOTE:** TL - Open TIME ALERT adjustments can be made in the Installer Menu. The TL Installer Menu display only appears when using this relay.	Relay 1
9	Safety Mode Alert output	Controls an external warning device. Activated when the system is in Safety Mode or Entrapment Mode. Safety Mode occurs when the gate encounters an obstruction. In Entrapment Mode ,the gate is stopped, and alert occurs if the internal inherent sensor triggers while the system is in Safety Mode.	Relay 1
10	Entrapment Mode Alert output	Controls an external warning device. Activated only when in the Entrapment Mode.	Relay 1
11	Unauthorized Vehicle Entry output (Tail gate alert)	Controls an external warning device. Activated when a second vehicle enters from the outside without a valid input from an access control device. This output releases when an access control input signals open or the arm/gate reaches the close limit.	Relay 1
12	Outside Obstruction Vehicle Detector output	Interlocks an entry device to prevent pedestrian use. This output is active whenever the Outside Obstruction Loop Detector is tripped.	Relay 1
13	Loitering Alert	Indicates a vehicle is loitering on the Outside Obstruction Loop. Adjustable from 0 seconds with 15 to 135s selectable delay timeframes in 30s increments. **NOTE:** LT LOITERING ALERT adjustments can be made in the Installer Menu. The LT Installer Menu display only appears when using this relay.	Relay 1 or 2
14	Gate nearing full travel output	Applies to operators with position/proximity sensors only. This output is used to reduce the sensitivity of a proximity sensor near the ends of gate travel. Activated when the gate is 3s (approx. 3 ft) from expected limit switch trigger (full travel in both the open and close directions). **NOTE:** If the operator has not yet learned limits, it will energize Relay 14 when the motor begins moving the barrier arm.	Relay 1
15	Gate failure output	Activated to report occurrence of a problem. Indicates the system is in an Error Mode, Fault Mode or Entrapment Mode. If the relay is active, the gate is disabled.	Relay 1
16	Motor Running output	Active when the motor is running and gate is in motion.	Relay 1
17	AC Power Failure output	This relay is normally energized and drops with loss of AC power.	Relay 1
18	DC Power Failure output	**DC operators only.** The relay activates when the battery power is very low, but the output ceases when the battery is dead. The relay is triggered when the battery is less than 20 volts.	Relay 1

Relay No.	Name	Description	Wire Connection
19	Flasher Relay	Flashes lights once per second. The relay is constantly pulsing except when the open limit switch is triggered. * Preferred connection is Relay 2, a solid state relay.	Relay 1 or 2*
20	Free Exit Loop Vehicle Detector output	Active when the Free Exit Loop is tripped.	Relay 1
21	Inside Obstruction Vehicle Detector output	Active when the Inside Obstruction loops is tripped.	Relay 1
22	Reset Loop Detector output	Active when the Reset loop detector is tripped.	Relay 1
23	External Latching Gate Lock Output	Not used in the Smart DC Controller.	Relay 1
24	Gate at Partial Open Position	Active when the partial open position is reached or exceeded.	Relay 1
25	DC Power Alert	Deactivates when the software detects a low battery voltage (below 21VDC, but greater than 18VDC) for a duration of 2 seconds or more. To slow battery drain, accessory power loads are shed.	Relay 1
26	Free Vehicle Detector Pulse	Activates when the Exit Loop Detector is tripped and causes a 250mS pulse output to occur.	Relay 1
27	Not Open (requires AC power)	When AC power is detected, this relay activates when the gate in NOT on the open limit. If AC power fails, or the gate is on the open limit, the relay is deactivated.	Relay 1
28	Flasher (requires AC power)	Controls flashing lights that pulse 500ms per second. The relay is constantly activating except when the open limit switch is triggered or AC power fails.	Relay 1

Revenue Control Parking Applications

Additional mechanical relay options are shown in Table 5. Any of the options can be configured through the relays on the Smart DC Controller. If you need additional mechanical relay terminals, an optional extended relay module with 8 terminals is available from HySecurity.

NOTE: System baud rate: 38,400

Programmable User Relays: Table 5

StrongArmPark DC Revenue Control Parking Application

Relay No.	Name	Description	Wire Connection
29	Outer Arming Loop Active Output OALD	Input. Interlocks an entry device to prevent pedestrian use. This output is active whenever the Outer Arming Loop Detector is tripped. **NOTE:** If the Center Loop is tripped before the Outer Arming Loop (indicating a vehicle is exiting the facility), this relay will not energize.	R1, R3 through R10
30	Inner Arming Loop Active Output IALD	If the Center Loop is tripped before the Inner Arming Loop (indicating a vehicle is entering the facility), this relay will not energize.	R1, R3 through R10
31	Device Reset Pulse Output	N.O. Input. A 250ms pulse occurs when the Center Loop is triggered. If a back out occurs, this relay sends a reset pulse to the access control device or computer system to invalidate the ticket.	R1, R3 through R10
32	Back Out Pulse Output	N.O. Input. The relay outputs a 250ms pulse when a back out has occurred based on the criteria given in the "Revenue Control Parking Functions."	R1, R3 through R10
33	Inbound Transient/Lot Output	N.O. Input. The relay outputs a 250ms pulse used to increment the transient and total vehicle counts.	R1, R3 through R10 TRANSIENT USER
34	Outbound Transient/Lot Output	N.O. Input. The relay outputs a 250ms pulse used to decrement the transient and total vehicle counts.	R1, R3 through R10 TRANSIENT USER
35	Inbound Tenant Output	N.O. Input. The relay outputs a 250ms pulse and increments the tenant counter when the Tenant User input is activated and OALD, then CLD, are tripped and released. This activity signals a prepaid customer has entered the facility.	R1, R3 through R10 TENANT USER
36	Outbound Tenant Output	N.O. Input. The relay outputs a 250ms pulse and decrements the tenant counter when the Tenant User input is activated and IALD, then CLD, are tripped and released. This activity signals a prepaid customer has exited the facility.	R1, R3 through R10 TENANT USER
37	Inbound Special Output	N.O. Input. The relay outputs a 250ms pulse and increments the special counter when the SPECIAL USER input is activated and OALD, then CLD, are tripped and released. This activity signals a customer has entered the facility.	R1, R3 through R10 SPECIAL USER

Relay No.	Name	Description	Wire Connection
38	Outbound Special Output	N.O. Input. The relay outputs a 250ms pulse and decrements the tenant counter when the SPECIAL USER input is activated and IALD, then CLD, are tripped and released. This activity signals a customer has exited the facility.	R1, R3 through R10SPE-CIAL USER
39	Set aside for Factory Use	HySecurity Testing Only	Do not use

Extended Relay Module Option

The extended relay module provides 8 numbered mechanical relays. R3, RELAY 3 LOGIC through R10, RELAY 10 LOGIC can be accessed through the Installer Menu. Set the number for the relay based on the information found in Tables 4 or 5. Table 5 is oriented toward revenue control parking lot applications.

Wire communication cable connections between the DUAL GATE ports, at the base of the SDC, and the extended-mechanical relay module. See illustration"Overview of the Smart DC Controller" on page 4-2.

Vehicle Detector Logic

In parking or barrier arm applications, where detectors may be used to close the gate, the Smart DC Controller needs to told what to do with the wired connections. Vehicle detector functions for the Center Loop (reset loop) are configurable through the "Installer Menu: Table 2." on page 3-7. They include, CR CB, CP, EB and DL.

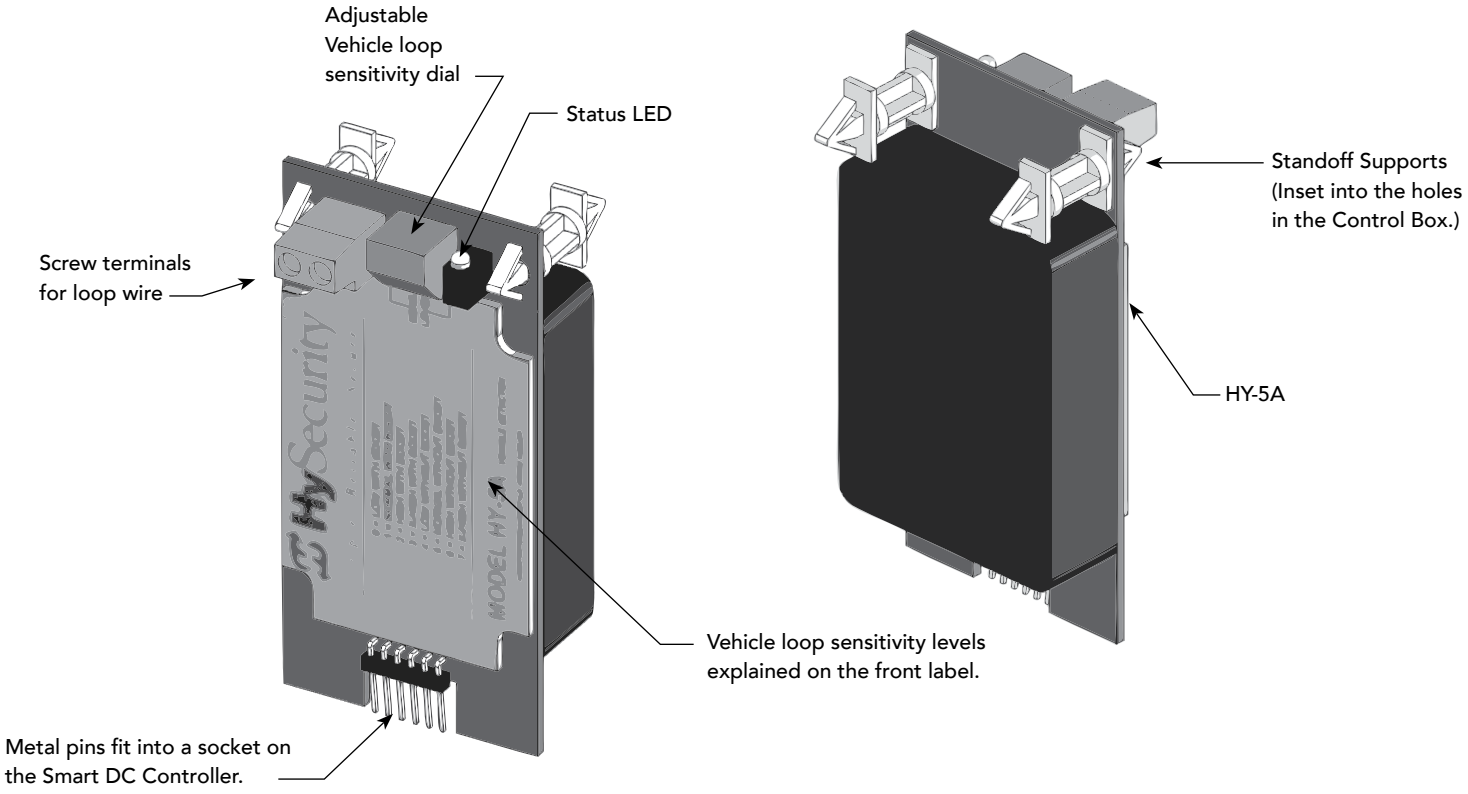

HY-5A Vehicle Detector Module

Vehicle Detector Logic Mode Selection

The Detector Logic (DL) menu item, found in the Installer Menu, lets you set the anti-tailgate mode. This menu item works in conjunction with the Close Timer (CT) when the vehicle detector is triggered. If you plan to use the anti-tailgate feature, re-check the the Close Timer (CT) setting to make sure it's compatible.

The two selectable modes for DL are as follows:

Mode 1 (Default): The default setting 1 causes the Close Timer to start when the Center Loop is clear. The Close Timer begins to count down only after all vehicle detectors are clear and no other open command is present.

Mode 2: A setting of 2 causes the Close Timer to start when the open limit switch trips. The close timer does not wait for vehicle detectors to clear, but instead it starts running as soon as the open limit is reached.

NOTICE: Using any vehicle detector logic mode other than Mode 1 (default) requires that all the loops be placed with the geometry and spacing as shown in the layout drawings. See "Reference" on page 7-1.

TailGate Alert

User Relay 11 is available for notification devices. For example, it is used to activate an alarm, or camera. If a tailgating vehicle is detected, the relay will be activated.

Vehicle Detector Installation: HY-5A

The Smart DC Controller provides an interface for up to four different vehicle detector functions.

NOTE: Standard box type 11 pin (24 VDC or 24 VAC) vehicle detectors may be connected in the traditional manner, but HySecurity's custom HY-5A mini-detector module plugs directly into the Smart DC Controller, making field installation much faster and enhancing performance.

The detector communicates with the Smart DC Controller microprocessor to achieve the following benefits over common box type detectors:

- Loop frequency is automatically set and monitored by the Smart DC Controller.
- Best operating frequency for each loop is automatically selected.
- Cross-talk between multiple loops is impossible.
- Very low power draw, which is important for maximum UPS capability during a power failure or for solar applications.
- Loop frequency and call strength can be reported on the Smart DC Controller display.
- Loop malfunctions are stored by the Smart DC Controller and appear in code on the display.

NOTE: It is not mandatory to use two separate detectors for inner and outer obstruction detection; however, the benefits of using the additional HY-5A detector are great. Several new features are possible, such as second vehicle tailgating detection, loitering alert, and selectable non-reversing options.

Four vehicle detector inputs (terminals: EXIT LOOP, IN OBS LOOP, OUT OBS LOOP, CENTER LOOP) exist on the Smart DC Controller, as well as the four direct plug ins for the HY-5A modules. See "Overview of the SDC and Power Module" on page 4-2.

The vehicle detector input functions are as follows:

- Free Exit Loop Detector - Opens a fully closed gate.
- Inside Obstruction Loop Detector (IOLD) - Triggered by the inside (secure side) vehicle detector loop
- Outside Obstruction Loop Detector (OOLD) - Triggered by the outside (public side) vehicle detector loop
- Center/Reset/Shadow Loop Detector (CLD) - On barrier arm gates, prevents closure when active. On swing gates, prevents gate from opening or closing when the vehicle detector is active.

NOTE: Use of any combination of HY-5A detectors and box detectors is acceptable. On occasion, multiple obstruction detectors may be mandatory. For example, an area greater than 200 square feet (61 square meters) of vehicle loop cannot be connected to any one detector because the sensitivity becomes inadequate.

Connecting HY-5A Vehicle Detectors

NOTE: Refer to the installation instructions provided with the HY-5A vehicle detectors. It provides detailed illustrations and instructions that are not found in the steps below.

A quick overview on how to install the HY-5A Vehicle Detector modules, one at a time, follows:

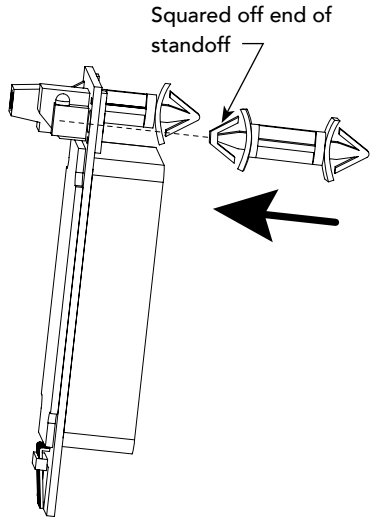

1. Turn off the AC power switch on the Control Box.
2. Insert the locking end of the two white plastic standoffs into the mounting holes on the detector.
3. Plug the detector into the appropriate socket along the right edge of the Smart DC Controller. Be careful to align the six detector pins into the socket correctly (the screws for tightening the terminals should face toward the board), and then snap the standoffs into the holes in the control box.
4. Route the loop wires through the holes provided in the control box and connect the loop leads to the two terminals on the HY-5A detector. Tighten the terminal screws securely.
5. To enable the detector, turn on power. The detector will immediately tune if it is connected to a vehicle loop. Make sure no cars or other metal objects are over the loop.
6. Repeat Steps 1 through 5 for each HY-5A detector.
7. If the detector module is unplugged after it is enabled, a communications alert (ALERT 10) will be triggered. If the fault is not resolved, an error message, ERROR 3 "Detector Failed" is displayed.

   NOTE: If there is any detector fault, the gate operator functions as if the detector is triggered.

   Pressing the RESET button:
   - Clears any errors
   - Tunes the detectors on connected loops
   - Un-installs any detectors that have been removed

8. The Smart DC Controller automatically governs frequency selection for all HY-5A detector modules. This simplifies installation and guarantees that there is no cross-talk between multiple loops. The frequency and call level can also be manually selected; if this is required, refer to the appropriate loop set in the "Installer Menu: Table 2." on page 3-7.
   For example, CLD0 RUN MODE
   CENTER LOOP SET controls the center loop detector.

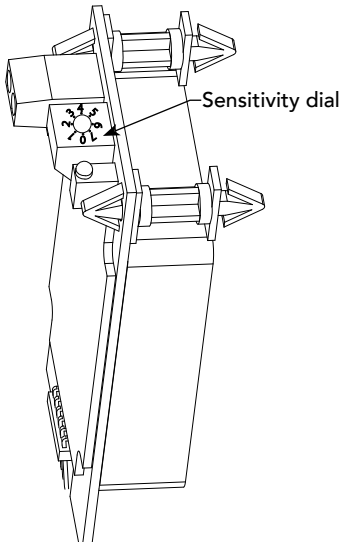

9. Sensitivity is the only adjustment available on the detector itself. Generally, sensitivity does not need to be increased unless the loop is large or there are multiple loops connected to one detector.

   NOTE: Do not exceed more than 200 square feet (61 square meters) of loop area to one detector.

   If required, adjust the sensitivity using the rotary dial.
   The factory default setting is 1.

0 = Low with boost*	4 = Low without boost
1 = Normal with boost*	5 = Normal without boost
2 = Medium with boost*	6 = Medium without boost
3 = High with boost*	7 = High without boost

   NOTE: *A boost feature is applied for settings 0 through 3. Boost increases the sensitivity during a call and is useful for maintaining continuous detection if the signal becomes weak (such as with tractor-trailer trucks). Sensitivity settings 4 through 7 are the same as 0 through 3, but without the boost feature.

10. Set the loop configuration in the Installer Menu. Display settings include, DT, CR, CB, CP, EB, OR, and IR.
11. Set the vehicle detector logic (DL).

NOTE: The outside and inside Obstruction Loop Detectors are factory configured to fully re-open the gate as a default setting. In the Installer Menu, each detector can individually be set so that when the gate is closing there is only a pause if triggered. To change the setting, go to the menu OR or IR item and set to 0.

Installing Standard 11-Pin Box Type Vehicle Detectors

If standard 11-pin box type vehicle detectors are to be used, perform the following procedure.

If there is sufficient space, install the sockets in the control box; if not, then install them in a separate external housing. Carefully consider your peripheral connections. Any peripheral device required for safe gate operation should be attached 24VDC in case of an AC power outage.

NOTE: Box detectors with relays require five times more power than HY-5A detectors. One HY-5A detector draws about 0.005A.

1. Connect 24 Volt power to the detector. Connect Pin No. 1 to a 24VAC or 24VDC terminal and Pin No. 2 to common.

2. Connect output Pin No. 6 to the Common Bus and output Pin No. 5 to one of the four detector terminal inputs (depending upon the detector function required) on the Smart DC Controller.

If multiple detectors are used, route the power wires and common wire from socket to socket (daisy-chaining) rather than individually running each wire to the same location. The only wires that are separate are the output wire to the Smart DC Controller and the detector loop input wires.

Always keep the detector loop wires well twisted beyond the area of the loop. The lead in portion sealed in a saw cut does not need to be twisted so long as the wires are encapsulated in loop sealant and cannot move.

Photo Eyes (Non-Contact) Installation

Plan to integrate photo eyes (photoelectric sensors) in your site plan. Photo eyes are wired to the SDC and require low voltage conduit to the HydraSupply cabinet. If your site conditions require a battery-powered transmitter, it can be ordered through your distributor.

Understand your site requirements and use the layout diagrams available in the appendix to determine the most appropriate mounting positions for any additional photo eyes. The Smart DC Controller has two photoelectric sensor inputs (Photo eye open and Photo eye close).

If there are no other secondary external entrapment protection sensors (typically an edge sensor), then for slide gates, swing gates or any site that must comply with UL 325 regulations, at least two photo eyes are required to serve and reverse the gate in each direction of travel.

The two common photoelectric sensor types are thru-beam and retro-reflective; each has its advantages. A thru-beam sensor is generally more powerful and able to function reliably with dirty optics and in poor weather. A retro-reflective sensor has the convenience of not requiring the installation and electrical wiring of the remote emitter required in a thru beam system, but is generally less reliable in poor weather.

NOTE: Avoid using a retro-reflective device to span a distance greater than 24 feet (7.3 meters) in an outdoor environment because of reduced performance.

Compatibility

The UL 325 standard requires that a photoelectric sensor be laboratory tested and "recognized" under UL 325. In order to be compatible with all HySecurity operators, a photo eye must be rated to function from 24 Volts DC source power.

Installation

Install additional photo eyes according to the following steps.

1. Locate the photo eye approximately 15 to 30 inches (38 to 76 cm) above the ground and as close to the gate as possible. See site layout below.
2. Mount the receivers on the left or right side of the gate operator.
3. Mount the emitters just beyond the travel of the arm in the fully-closed position.

NOTE: The installation locations described above are intended for pedestrian detection. If photo eyes are also to be used for vehicular detection, consider (in addition to the low elevation photo eye for cars) installing another photo eye at a height of about 55 inches (140 cm) to detect semi (tractor- trailer) trucks.

Configuration

Configure the photo eyes according to the following procedure.

1. If the photo eye has an internal switch for setting Light Operate versus Dark Operate, select Light Operate.
2. If the photo eye has a relay output and has both NO and NC terminals, some experimentation may be required to determine the proper connection because, when its in the Light Operate mode, the output relay is normally energized and releases when the beam is blocked.

Some manufacturers label an output as NO, when it is actually an NC contact.

If the photo eye has a solid-state output, you must choose a sinking-type connection.

Photo Eye Connections

Connect the three wires to the receiver and two wires to the emitter according to the following procedure.

1. Obtain the +24 Volt source power at one of the three spade-terminals on the power module.
2. Obtain the 24 Volt Common from screw-terminals on Terminal Nos. 14 or 15 (which are labeled Photo Eye Power Common) on the Smart DC Controller.

   NOTE: The -24 Volt Photo Eye Power also supplies the photo eye output Common.

3. Perform one of the following as applicable:
   - If the photo eye spans the road, connect the NO or NC output to Terminal No. 19 on the Smart DC Controller.
   - If the photo eye spans the gate's open storage area as in a slide gate scenario, connect the NO or NC output to Terminal No. 17 on the Smart DC Controller. (Not used on StrongArm M30/M50.)

Photo Eye Alignment

Most photo eyes require careful optical alignment in order to aim the emitter beam to the center of the receiver or reflector. In order to avoid false triggering, it is important to carefully align the system, especially with retro-reflective photoelectric sensors. To that end, HySecurity has provided a unique feature that turns power on to the photo eyes and causes a buzzer to chirp when the photo eye enters and exits alignment. Align the photo eyes using this feature by taking the following steps:

1. Refer to "User Menu: Table 1." on page 5-4.
2. Move the barrier arm off (away from) the close limit.
3. Set the menu item [PE_0] to [PE_1] .
4. Start aligning the photo eyes; the buzzer will chirp twice when the beam is broken and once when remade. (The parameter will automatically reset the next time the Close Limit Switch is triggered.)

Monitored Connection

A monitored connection tests for the presence and correct operaton of the photo eye prior to each gate activation and prevents gate operation if any fault is present. The Installer Menu item [PC_0] must be changed to [PC_1] to enable this feature.

Photo Eye Function

If the gate is stationary, a tripped photo eye will prevent the gate from starting in either direction. If tripped while in motion, the standard function is to pause the gate motion and then automatically restart again if the photo eye is clear within five seconds. An optional setting in the Installer Menu will cause a 2 second reversal of travel. See EC and EO in "Installer Menu: Table 2." on page 3-7.

Troubleshooting

The Smart DC Controller reports system malfunctions using three simultaneously occurring methods:

- Codes presented on its display (alert, fault or error)
- Activation of a buzzer which emits a series of chirps at defined interval
- Gate travel stops

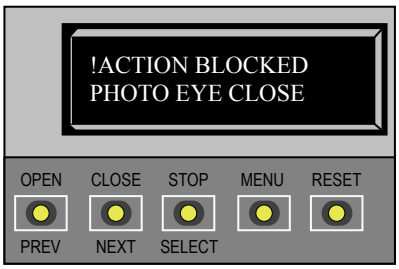

Refer to Table 3, "Troubleshooting Codes" on page 5-2, for details concerning identification and description of Alerts, Faults and Errors.

To help in problem-solving, the active status of each input on the controller is indicated by its associated LED.

- On AC-powered gate operators: Active-input LEDs are always illuminated.
- On solar-powered gate operators (with input power OFF): Press and hold the Tact button to illuminate the active-input LEDs.

NOTE: A qualified technician may troubleshoot the operator with the aid of the information and procedures that follow. If it is necessary to call a distributor for assistance, be sure to have the model and serial numbers available. Other helpful information is the job name, approximate installation date, and service and records of any recently-performed maintenance work.

System Diagnostic Messages

Code	Priority	How to clear
ALERT	Low	Enter a new command such as Open or Close.
FAULT	Medium	Press the Stop or Reset button
ERROR	High Serious issue that may require Technical Support.	Errors can only be cleared by pushing the Reset button or cycling power.

NOTE: The green LED near the display on the Smart DC Controller is the "fault indicator" of the processor. A steady green LED indicates the system is receiving power and operating in Run mode. When a fault, error, or alert occurs, it turns red. A yellow LED indicates Menu mode.

The Smart DC Controller maintains self-diagnostics. Specific codes appear on the display and the Audio Alert buzzer emits distinctive chirping sounds. Any Alert, Fault, or Error is logged into memory and stamped with the date and time. These diagnostic messages can be retrieved for analysis purposes via optional PC-based S.T.A.R.T. software.

NOTE: S.T.A.R.T. configuration and diagnostic software is available at no charge from www.hysecurity.com. Schedule software updates as part of routine maintenance. See "General Maintenance" section.

Troubleshooting Codes

Table 3: Troubleshooting Codes				
Alert/Fault/Error Display	**Type**	**Buzzer**	**Possible Cause**	**Suggested Corrective Action**
ENTRAPMENT MODE	ALERT	4 to 5 chirps/s for 5 minutes or until cleared	Occurs when the inherent sensor is tripped when the gate is already in Safe Mode. The operator will not function until it is reset, which can occur by: • An Open or Stop command • A Reset button command or a Fire Open command. With any one of these inputs, the operator will return to Safe Mode. Barrier arm binding or wind can cause a false alert.	1. Remove the obstruction. 2. Correct the gate hardware or temporarily, remove the arm in high wind conditions.
SAFE MODE	ALERT		Occurs when either the edge sensor or inherent sensor has been tripped. In Safe Mode, the automatic close timer is disabled, but any command will reset and/or start the gate in motion. Safe Mode clears when full travel is reached or the RESET button is pressed. Note that too tight of a spring on the DC14, hardware binding, or wind can cause a false alert.	1. Remove the obstruction. 2. Correct the gate hardware. 3. Adjust spring tension on a StrongArmPark DC14
NO AC POWER	ALERT	Chirps once whenever the gate reaches the close limit	AC power is shut off at the source (breaker) or is not connected. The AC power switch on the operator (lower rocker switch) is turned off, or the circuit breaker on the operator has tripped.	1. Have a licensed electrician check the wiring. 2. Connect AC power to the operator. 3. Reset circuit breaker at electrical panel. Reset the operator circuit breaker. 4. Turn AC power switch on.
LOW 24VDC	ALERT	Flashes on display 1s every 5s	Occurs when the battery voltage has dropped to less than 22 Volts. At this level, the batteries are 80% depleted. **NOTE:** Functionality of the controller board becomes impaired when the voltage drops below 21 Volts.	1. No AC Power. See above item. 2. Check all wiring connections. Clean or repair as required. 3. Check the following and replace, if necessary: • Battery condition • Charger failure. Check charger voltage • SDC • Transformer
DEAD BATTERY	ALERT	3 chirps upon any operating command entry	Extremely low UPS batteries – no automatic operation - batteries below 21 Volts. At this level, the batteries are 90% depleted. The gate will automatically open or close depending upon the setting chosen. Gate movement is possible, but limited to push button control until batteries reach 18 V.	See corrective action above.

Table 3: Troubleshooting Codes				
Alert/Fault/Error Display	**Type**	**Buzzer**	**Possible Cause**	**Suggested Corrective Action**
HYSECURITY BAD POWER	ALERT	N/A	Critically low 24V supply power. DC Buss power is below 14V – no control functions will be allowed. This message can occur only on initial start up, if power is critically low.	See corrective action above.
No display, LED blinks	ALERT		Smart DC Controller is receiving power, but battery voltage is very low. Several possible causes: • The AC power has been shut off from the operator for too long and the batteries are drained. • Wiring problem. • Batteries no longer hold a charge. • The Smart DC Controller failed. • Bad transformer.	See corrective action above.
HYSECURITY LOADER	ALERT		Software is currently being loaded.	Wait for software to finish loading.
FORCE OPEN	ALERT 1	2 chirps/s for 30s	The gate has been forced open from a full close limit and is being prevented from re-closing.	Will self-clear after an open or close input.
DRIFT CLOSED	ALERT 2	2 chirps/s for 10 seconds	The gate has drifted closed from a full open limit and is being prevented from re-opening.	Will self-clear after an open or close input.
EXCESS DRIFT	ALERT 3		Gate drift in transit - Advisory only. The alert appears if the gate drifts three times in a five minute period.	High wind factor: Remove arm or open gate. Slide gates: Check the track to make sure it is level.
MOTOR OVERLOAD	ALERT 4	2 chirps/s every 15 seconds	Thermal overload alert. Motor drive heat sink exceeds 210°F. When the alert is triggered, the gate can only "fully open" until the alert is cleared. The alert temporarily disables the operator.	1. Check gate hardware. 2. Check for properly sized weight/ length of gate/arm. Alert automatically clears when the temperature drops below threshold.
BOTH LIM ACTIVE	ALERT 5	2 chirps/s every 15 seconds	Both limit switches are on at the same time. Possible causes: • Short in wiring • Stuck limit switch • Debris in limit plate area (SwingSmart)	The SDC is seeing both limits tripped at the same time. Repair any wiring issues.
LIM NOT RELEASED	ALERT 6	2 chirps/s every 15 seconds	The limit did not release when the operator was commanded to move. Possible causes: • Broken drive belt. • Hardware holding the arm.	• Check/replace drive belt. • Release any holds on the arm. • Relearn Limits.
FREQ SHIFT FAULT	ALERT 7	2 chirps/s every 15 seconds	An HY-5A vehicle detector: Abnormal frequency change alert. Likely causes are poor integrity of loops or metallic objects within range. The display indicates which detector the alert applies to: Exit Loop (ELD), Inside Arming Loop (IALD), Outside Arming Loop (OALD), Center Loop (CLD).	Check the loop, lead in wires, and roadway for problems. Replace them, if needed.

Table 3: Troubleshooting Codes				
Alert/Fault/Error Display	**Type**	**Buzzer**	**Possible Cause**	**Suggested Corrective Action**
LOOP SHORTED	ALERT 8	2 chirps/s every 15s	An HY-5A vehicle detector: Loop is shorted. Inadequate insulation of loop wires.	Temporarily switch detector to be sure the loop is at fault, and then repair it.
LOOP OPEN	ALERT 9	2 chirps/s every 15s	An HY-5A vehicle detector: Disconnected loop alert. Lack of continuity in the loop wire possibly caused by broken loop wire or wire unplugged from detector.	The loop and lead in wires should be checked for problems or replaced.
I²C BUS ERROR	ALERT 10	2 chirps/s every 15s	An HY-5A vehicle detector: Communications error alert. HY-5A has been removed or there's a lack of integrity of the socket connection. The display indicates which detector the alert applies to: Exit Loop (ELD), Inside Arming Loop (IALD), Outside Arming Loop (OALD), Center Loop (CLD).	Remove and re-install the HY-5A and press RESET. Replace the HY-5A, if necessary. If communication is not re-established within 30 seconds, the controller will reset and the message changes to ERROR 3.
DETECTOR FAULT	ALERT 11	2 chirps/s every 15s	An HY-5A vehicle detector: Malfunction alert Caused by a fault within the HY-5A. The display indicates which detector the alert applies to: Exit Loop (ELD), Inside Arming Loop (IALD), Outside Arming Loop (OALD), Center Loop (CLD).	Remove and re-install the HY-5A and press RESET. Replace the HY-5A, if necessary.
ON TOO LONG	ALERT 12	2 chirps/s every 15s	The Smart DC Controller has an active loop input (HY-5A or box detector output) for more than 5 minutes. The SDC "sees" an active loop for more than 5 minutes. The "active" loop can be actual or false. The display indicates which detector the alert applies to: Exit Loop (ELD), Inside Arming Loop (IALD), Outside Arming Loop (OALD), Center Loop (CLD).	1. Check traffic patterns at the site and make sure that a vehicle is not parked on the loop. 2. Determine if the loop is stable. An unstable loop can hold the detector in a triggered state. 3. The loop and lead in wires should be checked for problems and replaced, if necessary. 4. Check sensitivity setting on the detector.
STIFF GATE	ALERT 13	2 chirps/s every 15s	The SDC detects a gate that, over time, is requiring more power to move it. Usually caused by degrading gate hardware or debris in a slide gate track, this alert appears in the history log. It does not affect opening or closing the gate.	1. Check and correct gate hardware as required. 2. Check motor brushes for excessive wear.
STUCK GATE	ALERT 14	2 chirps/s every 15s	The SDC detects that it cannot move the gate at all possibly caused by broken gate hardware or ice/snow buildup.	1. Manually move the gate. Verify that it moves easily and is unobstructed throughout gate travel. 2. Check and correct gate hardware, as required.
NO TARGET	ALERT 15	2 chirps/s every 15s	Target magnet fell off or target sensor wires are damaged. The target magnet on the chain (slide gate) is missing or has not been detected.	1. Make sure target is properly fastened. 2. Check the target sensor to make sure it is reading the magnet. 3. Change the sensor if it or its wires are damaged.

Table 3: Troubleshooting Codes				
Alert/Fault/Error Display	**Type**	**Buzzer**	**Possible Cause**	**Suggested Corrective Action**
BAD COIN BATTERY	ALERT 17	3 chirps at initial power up	The small battery on the SDC is loose or needs replacing.	1. Check for current software, install update, if necessary. 2. Verify that the battery is properly seated. 3. Replace coin battery. 4. Restore power. 5. Press RESET button.
CHANGE BATTERY	ALERT 18	1 chirp a minute	Batteries are not taking a charge properly. The SDC has detected that the 24VDC UPS batteries need to be replaced.	Replace the batteries. (The buzzer will chirp every minute until the UPS batteries are replaced.)
INTLOCK FAILURE	ALERT 22	2 chirps/s every 15 seconds	Interlock/Sequenced Gate communication lost. Appears when the RS-485 communication connection is lost for more than 15s between interlocked (dual gate) or sequenced gate operators.	1. Check cable connections and wiring. Make sure both operators are working properly and have the same current and up-to-date software versions. The alert automatically clears when communication between the two operators is restored. 2. Verify operators are configured correctly. For example, if the operator on site is a solo gate operator and the display code ALERT 22 appears, access the Installer Menu. 3. Verify the Installer Menu items: DG (Dual Gate) and SG (Sequenced Gate) are both set to zero. If gates are interlocked, make sure the DG and SG settings are correct. 4. Upload currect S.T.A.R.T. software and operator code.
EXT RELAY FAULT	ALERT 24	2 chirps/s every 15 seconds	Communication issue exists. The extended relay module, Hy8Relay, is not being recognized or it is not connected and values exist in the extended relay menu items. Alert noted in diagnostic log. **NOTE**: Keep your HySecurity gate operators current by "uninstalling" outdated versions of the S.T.A.R.T. application. Be aware that the current operator software code is not compatible with older version of S.T.A.R.T. find the latest software and operator code at www.hysecurity.com	Check the wiring: 1. Make sure the slide switch on the side of the extended relay module is set at "Normal." 2. (Y) Data + is connected to "A" DUAL GATE. 3. (G) DATA - is connected to DUAL GATE. 4. Connector cable (4-Pin) attaches to RS-485. If the Hy8Relay module is not connected, access the Installer menu and check that the extended relays are set to zero. SDC relays = R3 to R10.

Table 3: Troubleshooting Codes				
Alert/Fault/Error Display	**Type**	**Buzzer**	**Possible Cause**	**Suggested Corrective Action**
MOTOR RUN TIME	FAULT 1	1 chirp every 15s	The Smart DC Controller has detected the motor is on longer than the maximum run time selected. Should not occur in StrongArmPark DC. Possible causes: • Broken drive belt • Taper clamp slipping (SwingSmart)	1. Check and replace drive belt. 2. Increase Max Run Timer in the Installer Menu.
PHOTO EYE	FAULT 2	2 chirps/s once per minute	The photo eye is missing or not working. This fault can only occur if the supervised photo eye function is enabled in the Installer Menu.	Correct malfunctioning photo eye.
GATE NO LOAD	FAULT 4	2 chirps/s once per minute	The Smart DC Controller detects there is no load on the operator. The gate is not operational while this fault is triggered. Several possible causes: • DC switch off • Motor wires disconnected	1. Turn on DC power switch. 2. Replace drive belt. 3. Check DC motor wires. 4. Press RESET to clear fault.
LIMIT FAILED	FAULT 5		Not used in StrongArmPark DC.	
STUCK GATE	FAULT 14	2 chirps/s once per minute	The Smart DC Controller has tried 3 times to overcome a stuck gate/arm. The gate/arm is non-operational while this fault is triggered. Caused by broken gate/arm hardware or ice/snow buildup.	1. Check and correct gate hardware as required. 2. Press RESET to clear fault.
DIRECTION ERROR	ERROR 1	3 chirps/s once per minute	The Smart DC Controller detects that the operator ran in the wrong direction. Possible causes: • Motor wiring • Limit switch wiring (SwingSmart)	1. Check the following and correct, as needed. • Motor wiring 2. Press RESET to clear error.
!ACTION BLOCKED PHOTO EYE CLOSE	Photo Eye Close	1 chirp indicates command cannot be initiated	Operator received command to run, but movement is prevented. Photo eye is blocked or battery is dead.	1. Check the following and correct, as needed. • Photo eye path. Realign photo eye. User Menu: PE1, PHOTO EYE ALIGN • Photo eye battery 2. Press RESET to clear error.
!ACTION BLOCKED PHOTO EYE OPEN	Photo Eye Open	1 chirp indicates command cannot be initiated	Operator received command to run, but movement is prevented. Photo eye is blocked or battery is dead.	1. Check the following and correct, as needed. • Photo eye path. Realign photo eye. User Menu: PE1, PHOTO EYE ALIGN • Photo eye battery 2. Press RESET to clear error.
!ACTION BLOCKED GATE EDGE	Gate Edge Sensor	1 chirp indicates command cannot be initiated	Operator received command to run, but movement is prevented. Gate edge blocked or disconnected. If tripped when gate is moving, causes operator to enter SAFE mode.	1. Check the following and correct, as needed. • Obstructions, remove. • Faulty edge sensor. 2. Press RESET to clear error.

Table 3: Troubleshooting Codes				
Alert/Fault/Error Display	**Type**	**Buzzer**	**Possible Cause**	**Suggested Corrective Action**
HY-5A FAILED	ERROR 3	3 chirps/s once per minute	HY-5A communication failure. Caused by removal of HY-5A or lack of integrity of the socket connection. The display indicates which detector the alert applies to: Exit Loop (ELD), Inside Obstruction Loop (IOLD/IALD), Outside Obstruction Loop (OOLD/OALD), or Center Loop (CLD).	1. Press RESET to clear error. 2. Remove and re-seat the HY-5A. 3. If needed, replace the HY-5A.
MASTER-SLAVE COM	ERROR 4	3 chirps/s once per minute	The Smart DC Controller detects a communication error between master and slave in a dual gate installation. Several possible causes: • Master/Slave communication cable has not been installed correctly. • Master/Slave not configured properly through the Installer Menu. • Operator not properly earth grounded. • Master/Slave communication cable installed in same conduit as high-voltage AC power. • One operator does not have power applied to it. • One operator may have a different software version.	1. Correct communication cable. 2. Verify that each operator is configured properly through the Installer Menu. One operator must be set as Master and the other as Slave using the Installer Menu. 3. Install ground rod per NEC/NFPA standard. 4. Install separate conduit for communication cables. 5. Ensure AC power is present at both operators and all power switches are ON. 6. Check software version in operators by pressing RESET. Make sure both operators are running the same software version.
No display	ERROR 5	3 chirps/s once per minute	The display provides no indication of this error, but it can appear in the S.T.A.R.T. log and means that the Smart DC Controller has detected a serious internal error.	1. Report any instance of this error to HySecurity Technical Support. 2. Turn both power switches off to reset software. 3. Use S.T.A.R.T. to update the operator to the most current software version. 4. Replace Smart DC Controller.
MENU CHECKSUM	ERROR 7	2 chirps/s every 15s	Software issue exists that may require factory reset. Corrupt software or data.	Call HySecurity Technical Support for assistance.
RPM SENSOR	ERROR 8	3 chirps/s once per minute	RPM sensor disconnected. Motor Encoder or wires are damaged or unplugged.	Check wiring from the motor to the Smart DC Controller board.
BATT DISCONNECT	ERROR 9	3 chirps/s when detected	The Smart DC Controller cannot identify battery connection. The batteries are disconnected or a wiring fault exists. Automatically resets after one minute.	Smart DC operators ship with a wire disconnected to prevent battery drain. 1. Ensure the red wire's spade connector in the upper left corner of the control box is plugged in. 2. Correct any issues with battery wiring. 3. Check the 35 amp fuse on the circuit board. If blown, replace it.

Adjusting the Dynamic Reversing Sensor

StrongArmPark DC uses a dynamic reversing sensor. A solid immovable object blocking the gate will trip the sensor and cause the operator to stop, reverse and enter safe mode.

Available settings (0, 1, and 2), accessed through the Installer Menu, allow you to adjust the level of sensitivity. A maximum sensitivity of zero (0) is the default setting.

When changing the setting, consider the site design and vehicular gate traffic. It is recommended that you use the most sensitive setting while still allowing for reliable gate operation.

Figure 1: StrongArmPark DC Adjusting the dynamic reversing sensitivity

To adjust the sensitivity, take the following steps:

At a gate status display, press the MENU button twice. The CLOSE TIMER display appears.

Simultaneously, press the OPEN and RESET buttons to enter the Installer Menu.

Release the buttons and the LEARN LIMITS display appears.

Press NEXT until the display, shown in Figure 1, appears. The factory default setting is 0.

Use the SELECT and NEXT buttons to navigate and change the number on the display.

Press SELECT again to accept what appears on the display.

To exit the Installer Menu, press the MENU button. The gate status appears in the display indicating you have returned to Run Mode.

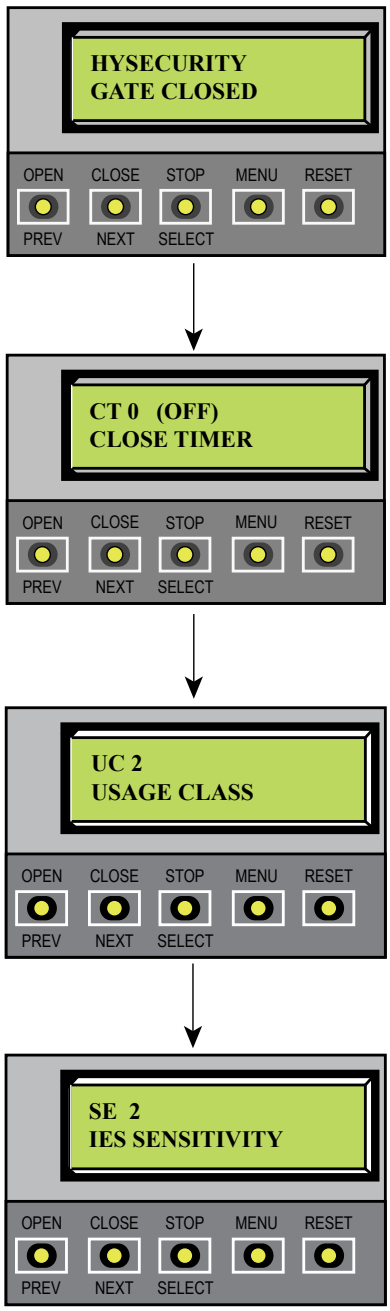

NOTE: On the StrongArmParkDC 14, you can also adjust the spring tension, in combination with the dynamic reversing sensor. A spring that is too tight can cause a false alert.

Other adjustments involved in the arm reversing include:

- SR (IES Sensor Logic) provides two settings: Half second reversal or full open upon trigger. The default is ½ second reversal.

For more information, review settings in the Installer Menu table.

If the dynamic reversing sensor is tripped, a fault occurs and SAFE MODE will appear on the display. For more information, refer to the *"System Diagnostic Messages" on page 5-1.*

Conditions Affecting the Dynamic Reversing Sensor

Wind load: In windy environments, large variations in motor current may occur. In these types of scenarios, you may want to use a higher number (less sensitive) setting.

NOTE: If you know a strong wind storm is imminent, removal of the barrier arm is recommended.

Barrier arm condition: Gate hardware near salty sea air can rust and may impede gate travel over time.

Gate maintenance: Barrier arms that are hit and bent should be replaced. In poorly maintained gate areas, the chance for false trips is higher.

StrongArmPark DC Wiring Schematics

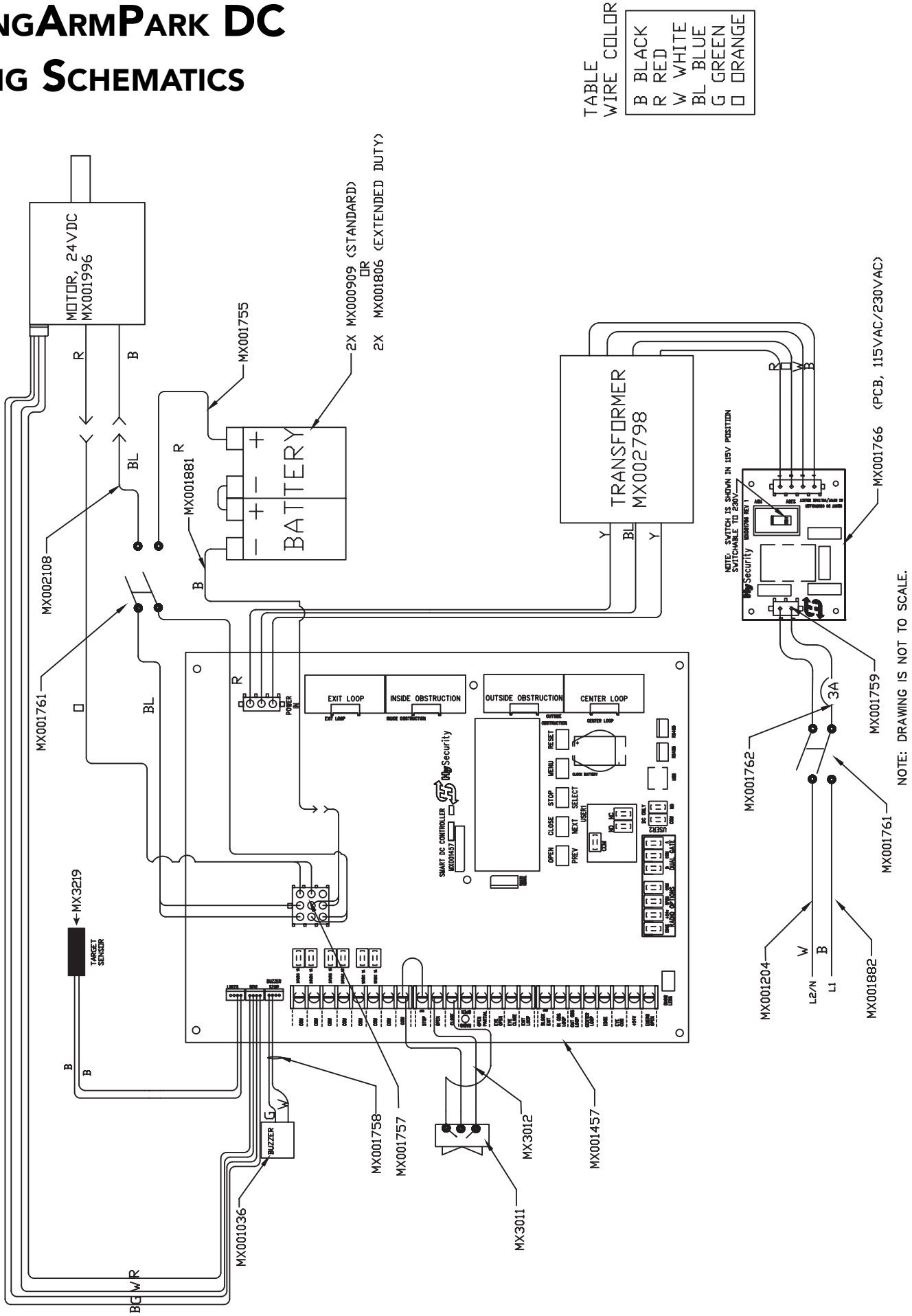

StrongArmPark DC 10 and StrongArmPark DC 14 Schematics

StrongArmPark DC Wiring Schematics - Solar

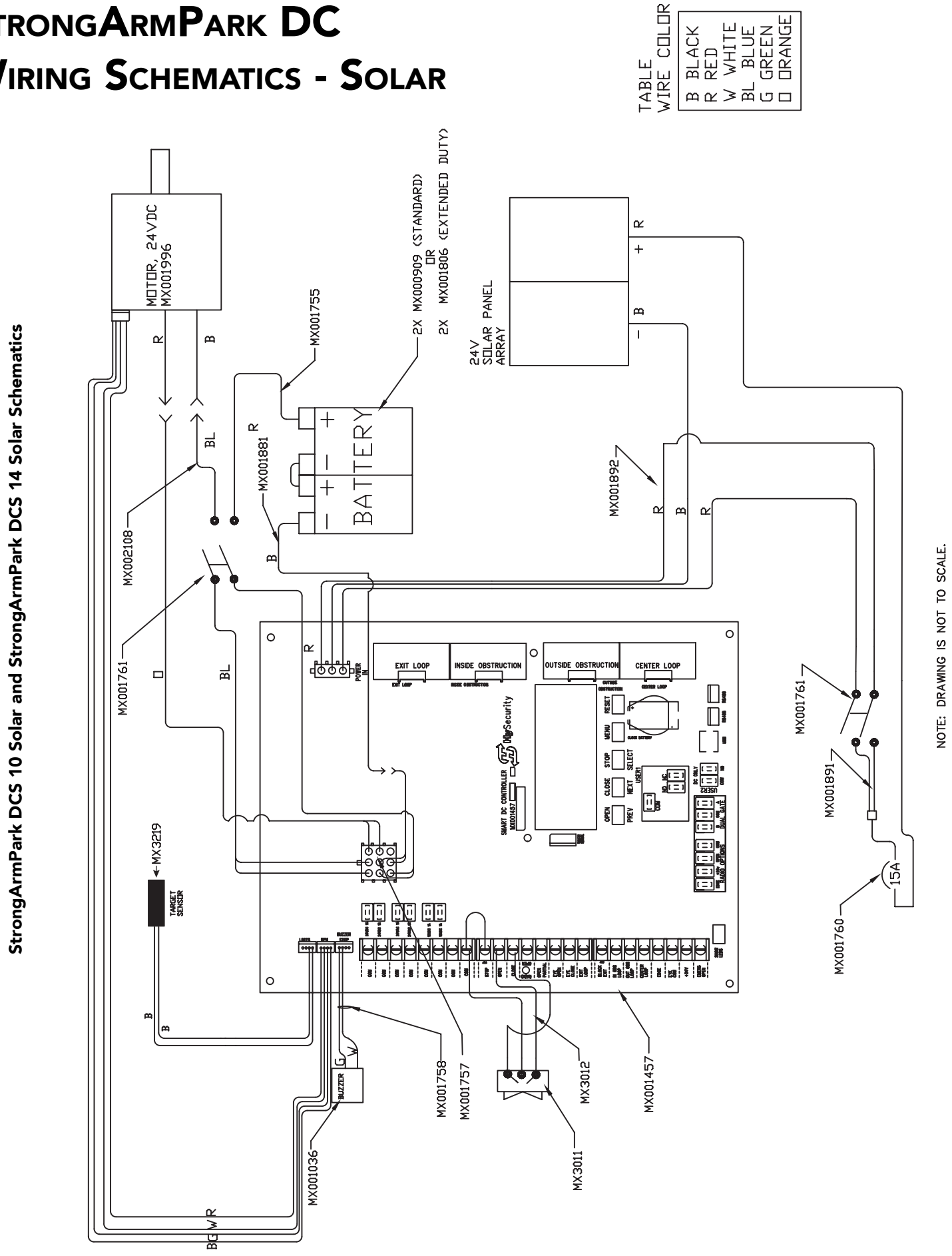

StrongArmPark DCS 10 Solar and StrongArmPark DCS 14 Solar Schematics

General Maintenance

Smart Touch Analyze and Retrieve Tool (S.T.A.R.T.)

HySecurity provides Smart Touch Analyze and Retrieve Tool (S.T.A.R.T.) software to help HySecurity gate operator users and installers conduct the following field service activities:

- Configure installer and user menu settings
- View the operator history (event) log
- Display monitored inputs for operator diagnostics
- Load Smart DC Controller (SDC) software

With S.T.A.R.T. software loaded on your laptop computer, you have an invaluable management tool for all HySecurity operators. The USB or RS-232 serial port (found on the Smart DC Controller), allows you to download system diagnostics and upload system configurations using the S.T.A.R.T. software. The free S.T.A.R.T. software is conveniently located at www.hysecurity.com. Instructions for downloading S.T.A.R.T. are on the website.

What You Need

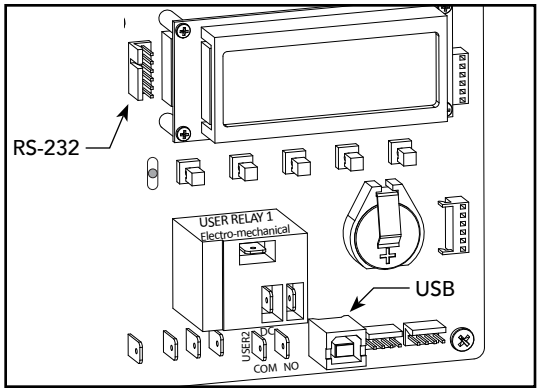

Standard USB 2.0 A-B communications cable or a RS-232 to USB adapter. Be sure to install the appropriate USB driver for your laptop computer with Windows PC operating system (XP, Vista, Windows 7, or Windows 8).

- Minimum 128MB of RAM
- Minimum 5MB of hard drive disk space
- VGA graphics card (minimum resolution of 800 x 600)

Installing S.T.A.R.T. Software

Read the S.T.A.R.T. User Manual, and then take the following steps to download S.T.A.R.T. software:

CAUTION The latest version of S.T.A.R.T. is encrypted. An error message will appear stating that the file is corrupt if you try to load new operator code using outdated S.T.A.R.T. software. Be sure to "uninstall" any outdated versions of S.T.A.R.T. from your laptop and install the latest version from www.hysecurity.com.

1. Bring up your web browser and type in http://www.hysecurity.com in the command line.
2. Click Technical Support (left column) on the HySecurity home page.
3. Enter your user name and password. If you do not have a user name, register as an online member.
4. Click to Download: S.T.A.R.T. software for Smart Touch and Smart DC.
5. Read the End User License Agreement and, if you agree to the terms, click, "I accept" (bottom of page).
6. Click RUN. A setup window appears.

7. Follow the step-by-step instructions to complete the installation.*
8. When the download is complete, log out of the HySecurity website. Shortcuts for the S.T.A.R.T. and SDC History Logs appear on your laptop's desktop.

***NOTE:** Confirm you have administrative rights by clicking the following on your computer screen: Windows start ->Control Panel ->User Accounts ->User Accounts. See if your name appears as an administrator. If you are the only user of a computer, you are by default the administrator. If not, you may need to consult with your company's system administrator prior to downloading the HySecurity START program.

Software Maintenance

The software on the SDC board is periodically being enhanced with new features that create an easier install and improve the on board diagnostic tools. Be sure to check the HySecurity website for the latest version of software and operator code before heading out for field maintenance.

Electrical Controls

CAUTION

Before servicing, turn off all power switches.

No routine maintenance is needed for the electrical system or controls. If the environment is very sandy or dusty, or has many insects, be certain to seal all holes in the electrical enclosure. Blow the dust out of the electric panel with compressed air. Use the "Troubleshooting Codes" on page 5-2 to assess and fix error, alert, and fault codes. If it is necessary to call a distributor for assistance, be sure to have your model and serial number ready. Other helpful information includes the name of the job, approximate date of installation, software version, and the service record of the operator, especially if any work has been done recently.

Clock Battery Replacement

A lithium coin battery supports the clock, so the date and time is retained even when the main power is turned off. Replace the battery about every two years (or as needed) with a DL 2025, DL 2032, or CR 2025, or CR 2032 battery.

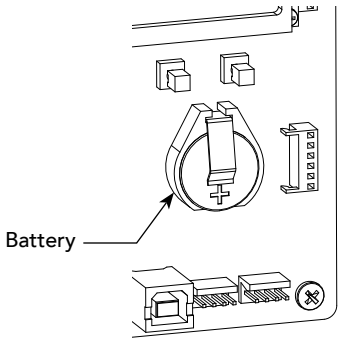

Fuse Replacement

A 35A fuse is located next to the 24VDC power supply inputs on the SDC. It requires no maintenance, but if it were blown due to a power surge or other unusual circumstance, it must be swapped out with a new fuse. The symptoms of a blown fuse appear as a control system malfunction (i.e. all control systems may not work properly).

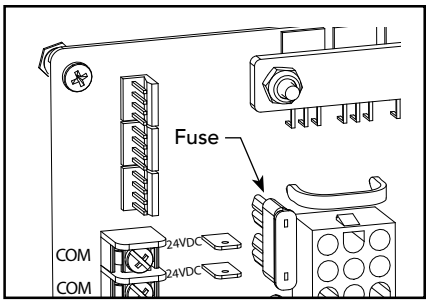

HyProtect™ Breakaway Arm Mount

The breakaway arm fasteners may need to be replaced from time to time. Use the following table to gauge which fasteners should be used.

NOTE: Each bolt is secured with an aluminum lock washer and nylon hex nut. Torque to 15 in-lb.

Breakaway Fasteners

Arm Length	Fasteners	Applies to:
10 ft or shorter	2 nylon bolts	Low wind
10 ft or shorter	1 nylon bolt 1 steel bolt	High wind
10 ft or longer		Low wind
10 ft or longer	2 steel bolts*	High wind

***NOTE:** Be aware, when using two steel bolts, that the arm may bend before the bolts break which voids the Limited Warranty.

Mechanical Maintenance

CAUTION

Before checking the internal mechanisms of the operator, turn off all power switches.

The StrongArmPark DC mechanical maintenance is not in depth or difficult, but should be performed on a routine basis. The operator chassis is zinc plated, but some environments may speed corrosion of this plating.

Schedule regular maintenance and look for the following:

- Assess that the drive belt has the proper tension. Check for drive belt wear. Fraying edges or missing teeth indicate that the drive belt needs to be replaced.
- Check for signs of rust. If any areas of rust are found, reduce the spread of corrosion by treating the areas with a rust inhibitor.
- Replace worn-out batteries.
- On the StrongArmPark DC 14 spring assembly, apply grease to zerk fitting and upper rod end.

Drive Belt Tension and Alignment

Proper drive belt tension is important for prolonging the life of the drive belt and maintaining the superior performance of the operator. To check the drive belt tension, take the following steps:

1. Remove the Front Access Panel.
2. Turn off the AC and DC power switches.
3. Remove the StrongArmPark DC top cover and drive belt cover.
4. Check to make sure the pulleys are aligned vertically.
5. With your finger, apply light outward pressure to
   the drive belt. If it is properly tensioned, it should only move about 1/16 to 1/8-inch (1.6 to 3.2cm).
6. To replace or re-tension the drive belt. Loosen the four motor bracket nuts and move the motor accordingly.
7. Retighten the motor bracket nuts.
8. Replace the drive belt cover and top cover.
9. Turn the AC and DC power switches ON. This cycles power which allows the operator to search for the target magnet and "relearn" its limits.

   NOTE: Be aware that the arm will cycle open, and then close, as it relearns its limits. If you don't cycle the power, the operator will not "relearn" its limits and will not operate properly.

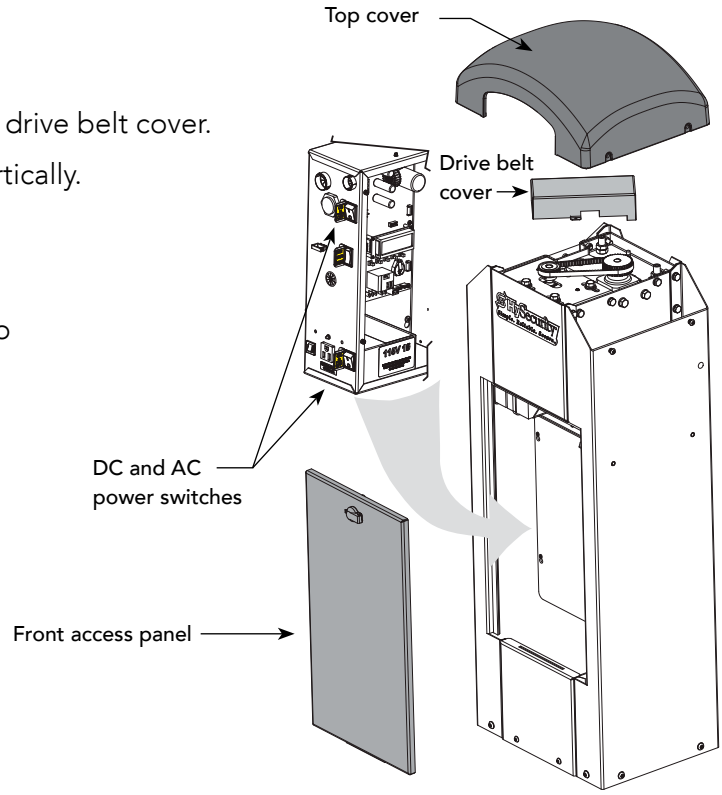

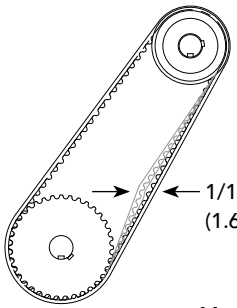

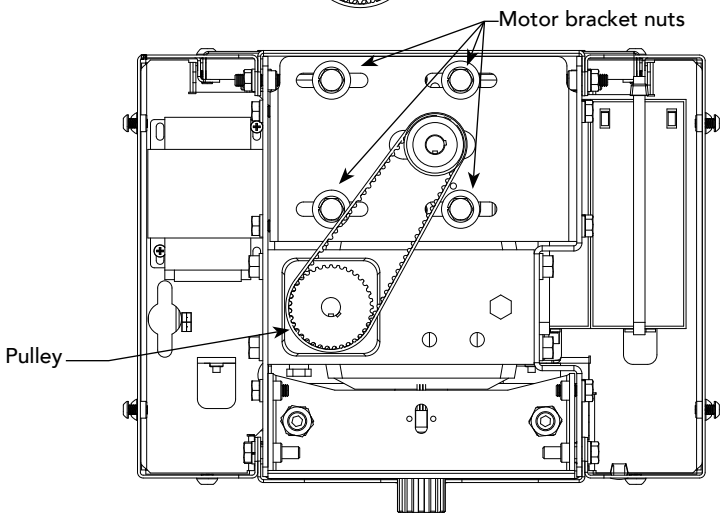

DC Battery Replacement

HySecurity provides a one year warranty from the date of shipment for all batteries supplied with the StrongArmPark DC operator.

Display indicators of a low battery include:

- LOW BATTERY or DEAD BATTERY appears on the Smart DC Controller display which may or may not be indicative of normal discharge.
- ALERT 18 CHANGE BATTERY appears on the Smart DC Controller display. The operator emits an audible chirp every minute to indicate a problem exists.
- AP (#) AC LOSS appears on the Smart DC Controller display. Gate operation is affected by AC power loss depending on customer preferences and the configuration set by the installer in the AP (#) AC LOSS User Menu.

Symptoms of a low battery may include:

- Gate remains locked in the open position
- Gate remains locked in the closed position
- Gate opens five seconds after AC power loss and locks open

CAUTION

Before replacing the batteries, turn off all power switches. Use only AGM batteries as replacements (8Ah - MX002008). The batteries supplied in the StrongArmpark DC operator are state-of-the-art AGM batteries. Do NOT use flooded cell batteries as damage may occur to the unit. Wear protective clothing while working with batteries.

The two 8Ah batteries are accessible within the operator on a tray next to the gear box.

To replace the batteries, take the following steps:

1. Remove the front access panel.
2. Turn off the DC and AC power switches.
3. Remove the top cover.
4. Access the two 8Ah batteries from the top. Cut the two black wire ties holding the batteries to the shelf.
5. Disconnect the red, blue, and black wires as you lift the batteries through the access window.
6. To install the two new batteries, reverse the removal procedure.
   - Install the first battery and connect the black wire.
   - Connect the blue jumper wires between the two batteries.
   - Connect the red wire to the red terminal on the second battery.
7. Replace the top cover.
8. Turn the AC and DC power switches ON. This cycles power which allows the operator to search for the target magnet and "relearn" its limits.

   NOTE: Be aware that the arm will cycle open and close (close or open) as it relearns its limits. If you don't cycle the power, the operator will not "relearn" its limits and will not operate properly.
9. Replace the front access panel and lock it.

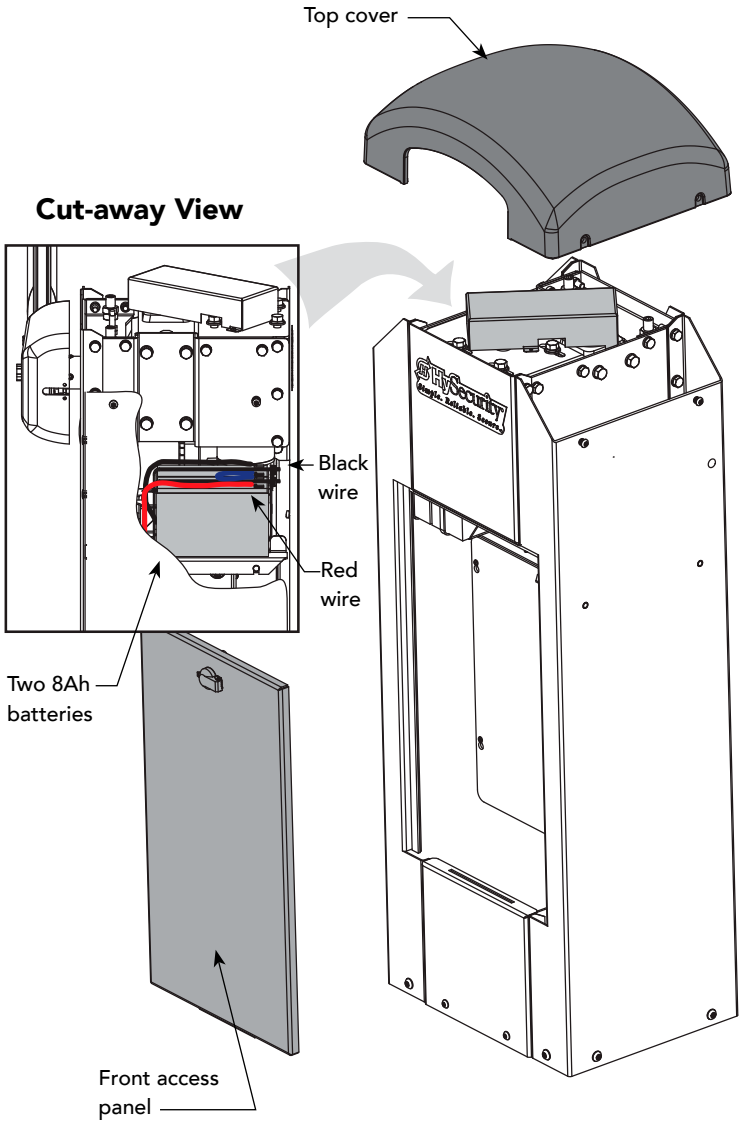

Handing Change

All StrongArmPark DC operators are shipped from the factory in a left handing configuration unless specified otherwise. If you need to change the StrongArmPark DC14 handing at the site, you will need to:

- Release spring tension
- Swap locations of the spring's eyebolt and spacer on the physical stop lever
- Retention the spring

NOTE: If changing the handing on StrongArmPark DC10, follow steps 1 and 10.

1 Remove the front access panel. (Keys come with the operator.)

Use a phillips head screwdriver to remove the plastic cover from the control box.

2 If the drive belt cover is in place, use a phillips head screwdriver to remove two screws that secure it to the motor plate. Set the drive belt cover and fasteners aside.

3 Using a 1/2-inch socket wrench, remove four fasteners securing the physical stop bracket. (Do NOT break the wire connections.) Hang the bracket from the side of the chassis, as shown.

CAUTION

Wires are attached to the physical stop bracket. Do NOT sever the wires or hang the bracket by the wires.

4 Remove the drive belt. Use a 9/16-inch socket wrench to loosen (do NOT remove) the 4 bolts securing the motor to the motor plate.

CAUTION

5 Wires are attached to the motor!

- Disconnect the 2 motor wire leads from the wire harness inside the chassis.
- Disconnect the blue connector wire from the Smart DC Controller and pull it out of the control box.

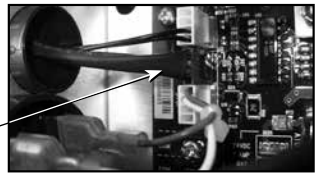

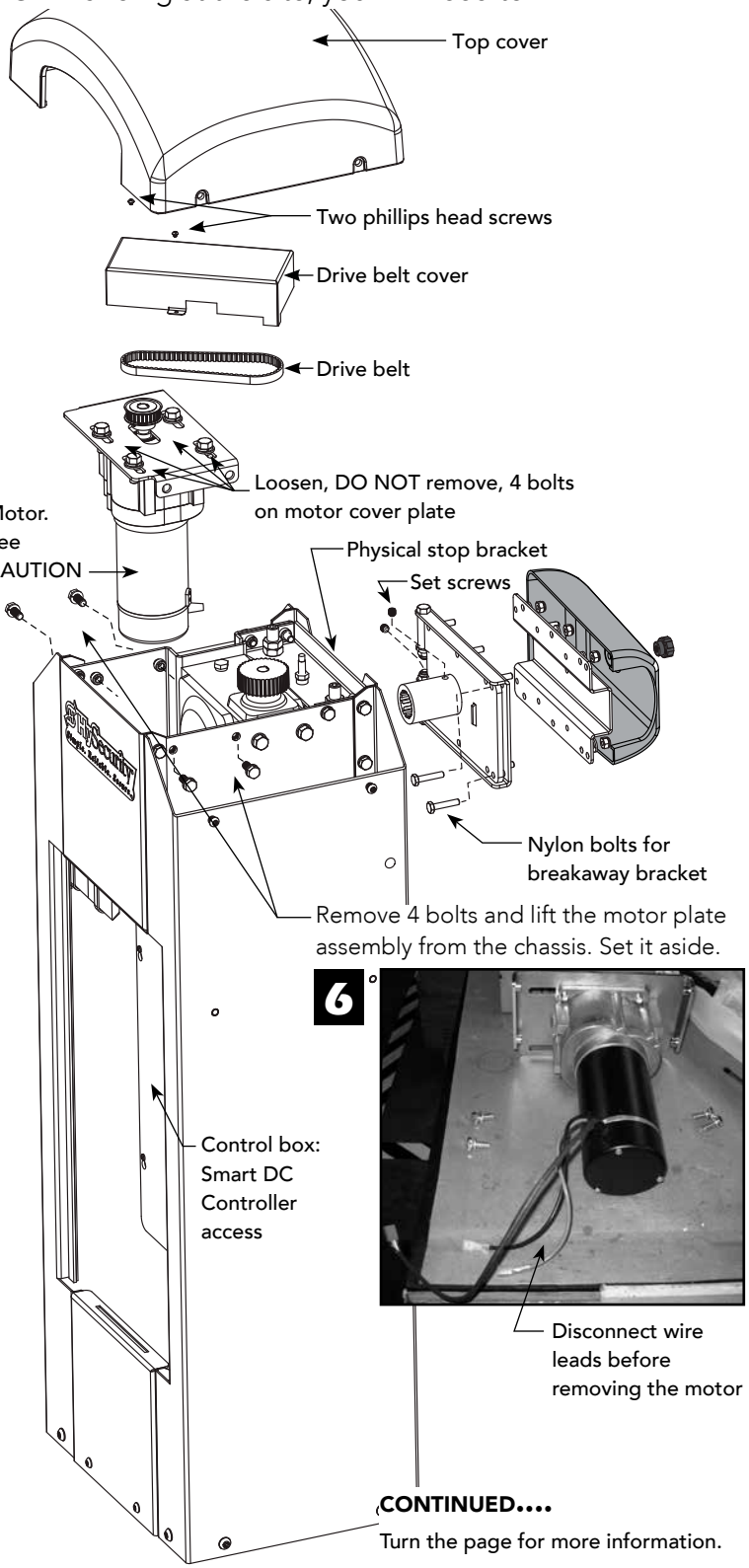

CONTINUED....

Turn the page for more information.

Spring & Physical Stop Lever Assembly

7 Remove spring tension. Use a crescent wrench (or 12 point ratchet) to remove the square base nut and washer.

NOTE: You do not need to loosen the nut on the top of the bracket. It helps keep the spring tension at factory settings.

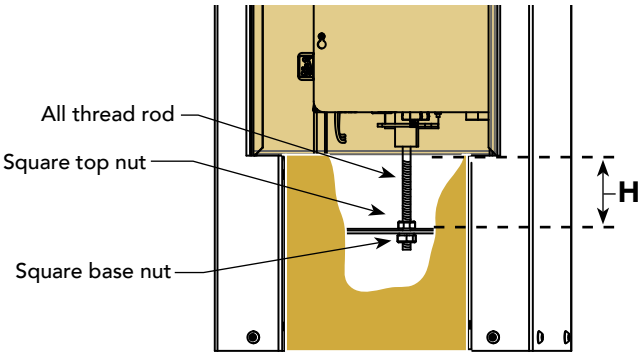

8 Swap physical stop lever hardware. Use a 3/4-inch deep well socket and box end wrench to remove the fasteners securing the eyebolt. Then, loosen and remove the fasteners from the other the physical stop lever and swap positions on the physical stop levers.

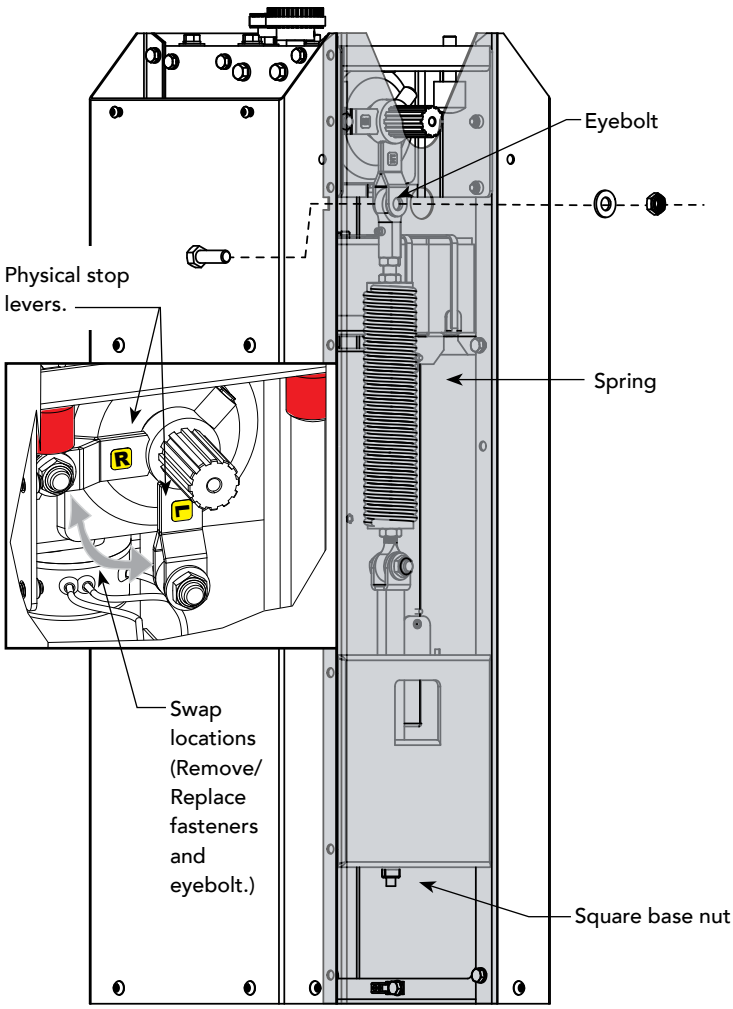

NOTE: For better access, you can rotate the gear box to reposition the physical stop levers.

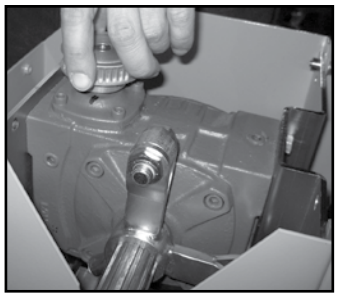

9 Reverse the steps found on page 1.

- Insert the all thread and re-attach the base nut.
- Tighten the two base nuts to the required "H" dimension. See chart.

StrongArmPark DC 14

Arm Length	Spring Setting (H)
11 - 12 ft (3.6 m)	3.5 inches (89 mm)
12 - 13 ft (4 m)	3 inches (76 mm)
13 - 14 ft (4.3 m)	2.5 inches (63 mm)

NOTE: If the arm length is less than 11 ft (3.3 m), disconnect the spring from the physical stop lever.

- Replace the motor and reconnect the 3 wire leads.
- Replace the drive belt and adjust the tension by sliding the motor plate and tightening its 4 bolts.
- Replace the physical stop bracket removed in step 3.
- Replace the drive belt cover.

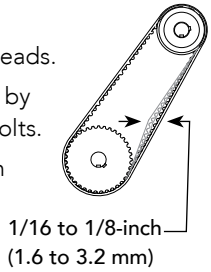

10 Set Handing

Turn ON the DC power switch and set the handing using the Smart DC Controller.

- Press MENU twice.
- Press and hold OPEN and RESET, and then release.
- Press NEXT until GATE HANDING appears.
- Press SELECT. SH blinks.
- Press NEXT to set the handing (Left or Right).
- To accept what is being displayed, press SELECT.
- To exit Menu mode, press RESET.
- Turn OFF the DC power switch.
- Install the breakaway bracket by aligning its splines with the gear box.
- Assemble the arm, apply power, and re-learn limits.
- Finish the site installation.

StrongArmPark DC Center Loop Layout

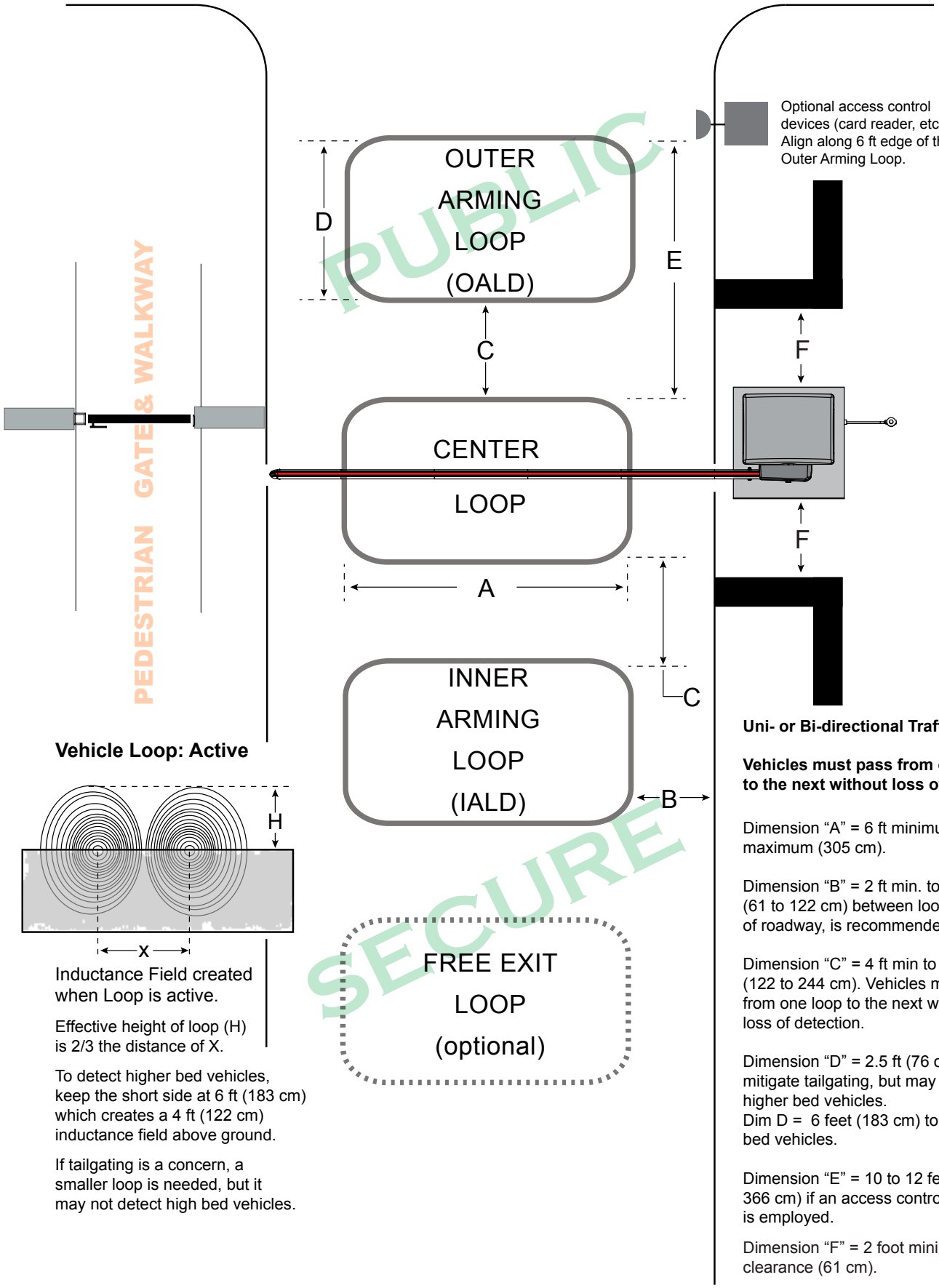

Vehicle Loop: Active

Inductance Field created when Loop is active.

Effective height of loop (H) is 2/3 the distance of X.

To detect higher bed vehicles, keep the short side at 6 ft (183 cm) which creates a 4 ft (122 cm) inductance field above ground.

If tailgating is a concern, a smaller loop is needed, but it may not detect high bed vehicles.

Uni- or Bi-directional Traffic Control

Vehicles must pass from one loop to the next without loss of detection

Dimension “A” = 6 ft minimum to 10 feet maximum (305 cm).

Dimension “B” = 2 ft min. to 4 feet max. (61 to 122 cm) between loop and edge of roadway, is recommended.

Dimension “C” = 4 ft min to 8 ft max (122 to 244 cm). Vehicles must pass from one loop to the next without loss of detection.

Dimension “D” = 2.5 ft (76 cm) to help mitigate tailgating, but may not detect higher bed vehicles.
Dim D = 6 feet (183 cm) to detect higher bed vehicles.

Dimension “E” = 10 to 12 feet (305 to 366 cm) if an access control device is employed.

Dimension “F” = 2 foot minimum clearance (61 cm).

StrongArmPark DC Center Loop Configuration

Two different types of vehicle loop connections are shown in the illustration:

- HY-5A - HySecurity vehicle detector (see "Connecting HY-5A Vehicle Detectors" on page 4-13 for more information).
- Generic box detector

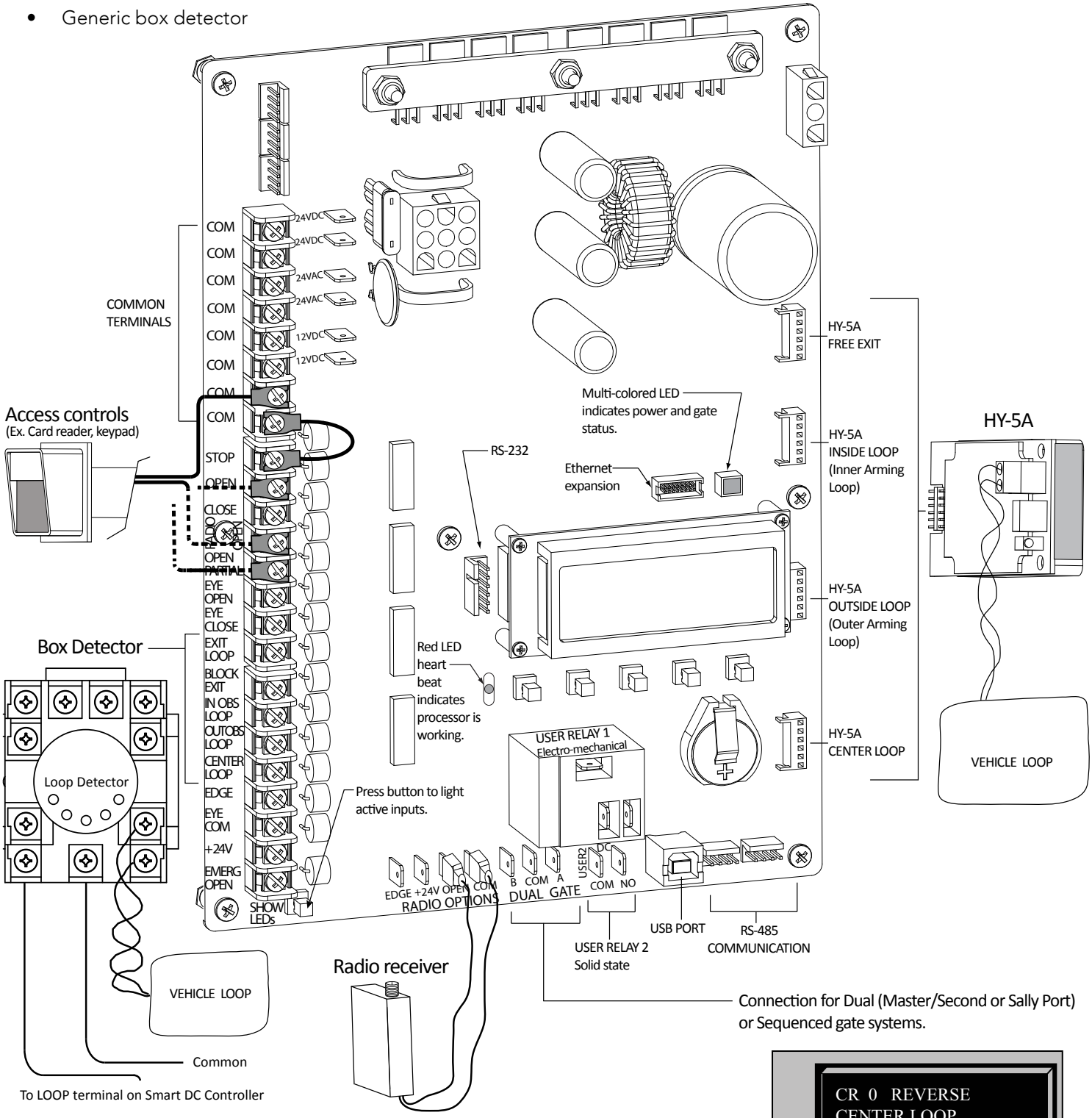

If you have a simple set up, similar to the single center loop diagram on page 7-3, you can change the default from re-opening if the center loop is triggered to only pause when triggered. Closure continues as soon as the loop is clear again. See the "CR" menu item in the "Installer Menu: Table 2." on page 3-7.

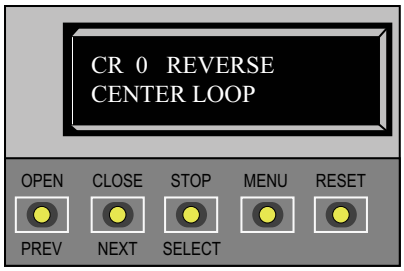

StrongArmParkDC Loop Layout

Sequenced Gates #1: Loop Layout

StrongArmPark DC with SlideSmart DC

1

To sequence the gates,set the Installer Menu item, SG to "1" in both gate operators.*

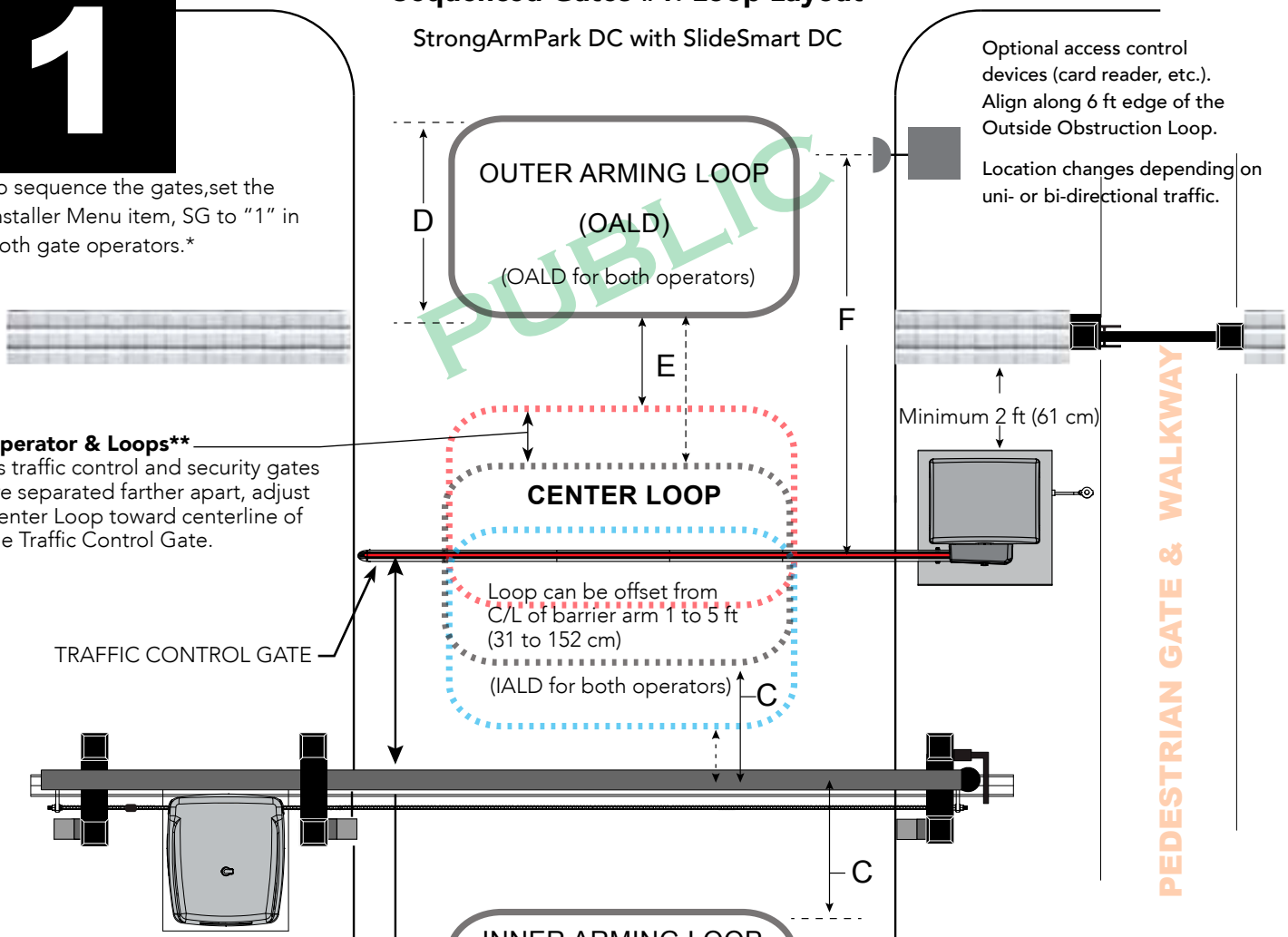

Optional access control devices (card reader, etc.). Align along 6 ft edge of the Outside Obstruction Loop.

Location changes depending on uni- or bi-directional traffic.

Operator & Loops**
As traffic control and security gates are separated farther apart, adjust Center Loop toward centerline of the Traffic Control Gate.

INNER ARMING LOOP
(IALD)
IALD for Traffic Control Gate or Free Exit for both operators. If loop used as Free Exit, you must have an OALD loop.

B

A

FREE EXIT LOOP
(optional)

Uni- or Bi-directional Traffic Control

Vehicles must pass from one loop to the next without loss of detection.

Dimension "A" = 6 ft minimum to 12 ft maximum (183 to 366 cm).

Dimension "B" = 2 ft minimum to 3 ft maximum (61 to 91 cm).

Dimension "C" = 3 ft min. to 4 ft max. Distance from edge of Center Loop to C/L of the Security Gate is 3 to 4 ft.

Dimension "D" = 6 ft (183 cm).

Dimension "E" = 4 ft min. to 8 ft (122 to 244 cm) max. Center Loop can be offset from C/L of gate:1 to 5 ft (31 to 152 cm).

Dimension "F" = 10 to 15 feet (3 to 3.6 m)

***NOTICE**

For sequenced gates to operate properly, all vehicle detectors must be wired to the Traffic Control Gate.

If a communication failure occurs, an AL22 (Alert 22) appears and the buzzer sounds. The Traffic Control Gate maintains functionality while-the Security Gate defaults to open until communication is restored (or the Security Gate is manually closed).

****NOTICE**

Center to center between gates:
4 ft minimum (122 cm)
9 ft maximum (274 cm)

Drawings not to scale.

StrongArmParkDC Loop Layout

Sequenced Gates #2: Loop Layout

StrongArmPark DC with SlideSmart DC

2

To sequence the gates,set the Installer Menu item, SG to "2" in both gate operators.*

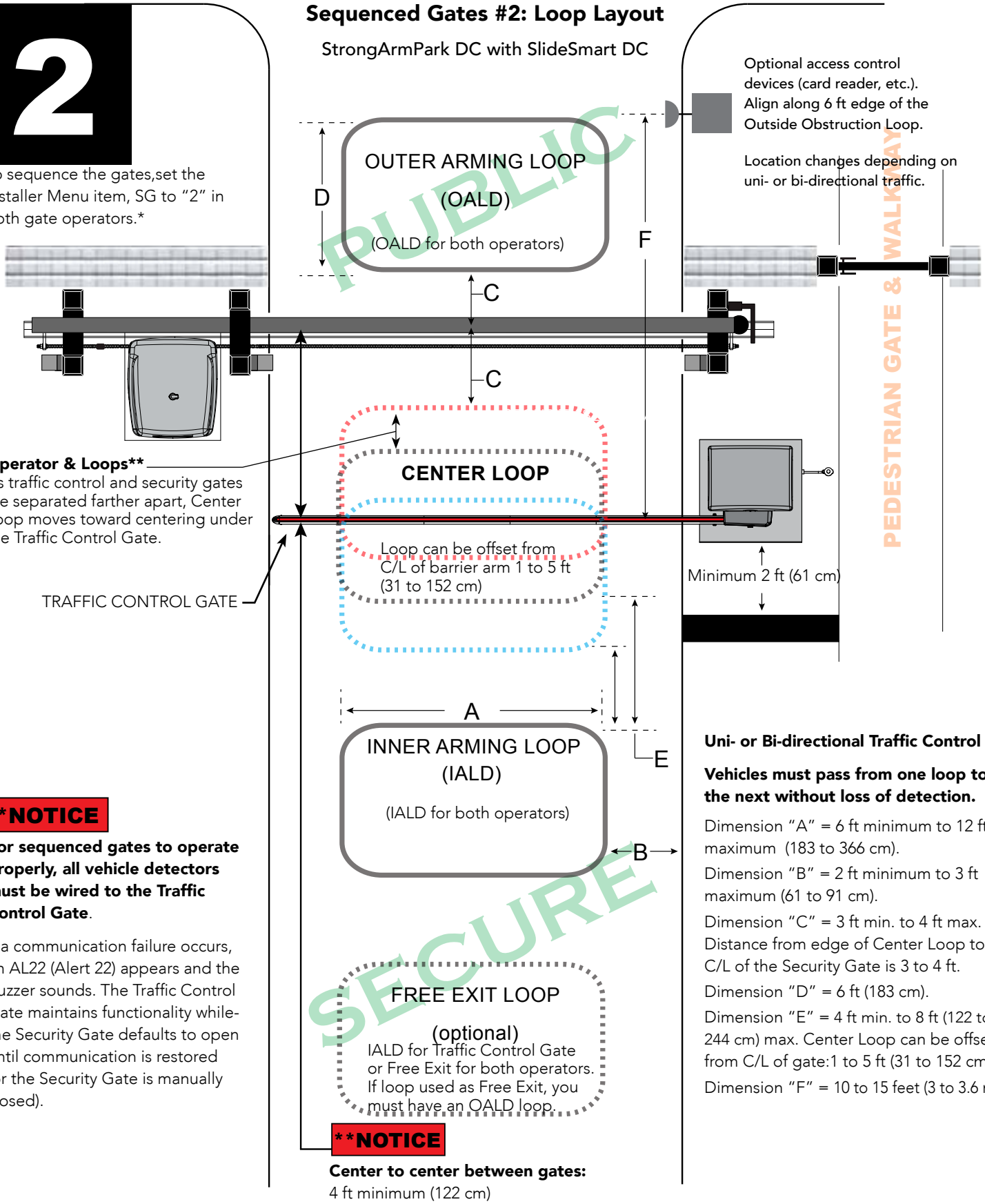

Optional access control devices (card reader, etc.). Align along 6 ft edge of the Outside Obstruction Loop.

Location changes depending on uni- or bi-directional traffic.

Operator & Loops**
As traffic control and security gates are separated farther apart, Center Loop moves toward centering under the Traffic Control Gate.

TRAFFIC CONTROL GATE

Uni- or Bi-directional Traffic Control

Vehicles must pass from one loop to the next without loss of detection.

Dimension "A" = 6 ft minimum to 12 ft maximum (183 to 366 cm).

Dimension "B" = 2 ft minimum to 3 ft maximum (61 to 91 cm).

Dimension "C" = 3 ft min. to 4 ft max. Distance from edge of Center Loop to C/L of the Security Gate is 3 to 4 ft.

Dimension "D" = 6 ft (183 cm).

Dimension "E" = 4 ft min. to 8 ft (122 to 244 cm) max. Center Loop can be offset from C/L of gate:1 to 5 ft (31 to 152 cm).

Dimension "F" = 10 to 15 feet (3 to 3.6 m)

***NOTICE**

For sequenced gates to operate properly, all vehicle detectors must be wired to the Traffic Control Gate.

If a communication failure occurs, an AL22 (Alert 22) appears and the buzzer sounds. The Traffic Control Gate maintains functionality while-the Security Gate defaults to open until communication is restored (or the Security Gate is manually closed).

****NOTICE**

Center to center between gates:
4 ft minimum (122 cm)
9 ft maximum (274 cm)

Drawings not to scale.

6623 South 228th St.
Kent, WA 98032-1872
800-321-9947

LIMITED WARRANTY

1. Warranty.

Hy-Security Gate, Inc. ("HySecurity") warrants that at the time of sale each of its products will, in all material respects, conform to its then applicable specification and will be free from defects in material and manufacture. This warranty does not extend to items listed as "accessories" in HySecurity's price list, when those items carry another manufacturer's name plate and they are not a part of the base model. HySecurity disclaims all warranties for such accessory components, which carry only the original warranty, if any, of their original manufacturer. HySecurity hereby assigns its rights under such manufacturer warranties—to the extent that such rights are assignable—to Buyer. The following additional durational warranties apply to HySecurity's products. The term of these additional warranties is determined by whether (1) the product is purchased through an authorized HySecurity distributor and (2) whether a timely and complete warranty registration is submitted to HySecurity. It is therefore important that you register your product with HySecurity within the 60 day period described below.

1(a) Warranty Items (Registered Gate Operators Purchased from Authorized Distributors)

For any gate operator product that is purchased from an authorized HySecurity distributor (this excludes product purchased through internet resellers or any distributor not authorized by HySecurity), if the online Warranty registration is completed at www.hysecurity.com/warranty within 60 days of the date of purchase by the dealer/installer and returned to HySecurity within the same 60-day period, the following Warranty terms will apply. HySecurity will warrant that the product will remain serviceable for the following periods:

a. Hydraulic Gate Operators: Five Years or 500,000 gate cycles (whichever occurs first) after the date of installation, or

b. Electromechanical Barrier Arm Operators: Two Years or 1,000,000 gate cycles (whichever occurs first) after the date of installation, or

c. Electromechanical Slide and Swing operators: Five Years after the date of installation—unless installed in a single family residential application, in which case the warranty term shall be Seven Years after the date the product is shipped from HySecurity; provided that the Five Year warranty period will not extend beyond Seven Years from the date that the product was shipped from HySecurity. This warranty does not apply to the components described below, which have the shorter warranty period indicated:

d. Hydraulic Gate Operator Drive Wheels including XtremeDrive™ wheels and rack: Two Years from date of installation.

e. Batteries used in all D.C. operators, inverters or other battery powered devices: One Year from date of shipment from HySecurity.

f. Items subject to normal wear including, but not limited to, chains, belts, idler wheels, sprockets, fuses and motor brushes: One Year from date of installation.

1(b) Warranty Items (Operators Not Purchased from an Authorized Distributor or Registered within 60 Days)

For any gate operator product that is not purchased from an authorized HySecurity distributor or for which the online Warranty registration or warranty registration form sent with every HySecurity operator was not filled out completely or not returned to HySecurity within 60 days of the date of purchase by the dealer/installer, the following One-Year Warranty will apply to that product: HySecurity warrants that the product will remain serviceable for the following periods, which begin on the date that the product was shipped from HySecurity:

a. All Gate Operators: One Year or 100,000 gate cycles whichever comes first.

b. Hydraulic Gate Operator Drive Wheels: One Year

1(c) Replacement Parts

HySecurity warrants that replacement parts (whether new or reconditioned) will remain serviceable for One Year from the date that the product was shipped from HySecurity.

1(d) Limitations and Exclusions Applicable to Each of the Preceding Warranties

The preceding warranties shall not apply to equipment that has been (1) installed or maintained improperly or contrary to instructions; (2) subjected to negligence, accident, vandalism, or damaged by severe weather, wind, flood, fire, or war; or (3) damaged through improper operation, maintenance, storage or abnormal or extraordinary use or abuse. Any modification made to products will void the warranty unless the modifications are approved in writing by HySecurity, in advance of the change (this exclusion does not apply to normal installation of approved accessories and/or protective devices or sensors). It is the responsibility of the distributor, installer, or End User to ensure the software version in the operator is maintained to the latest revision level.

THESE ARE THE ONLY WARRANTIES GIVEN BY HYSECURITY AND ARE IN PLACE OF ALL OTHERS.

These warranties extend to HySecurity's Distributors, to the Dealer/Installer, and to the End User of the product following installation. They do not extend to subsequent purchasers. Dealer/Installers or End Users may receive a replacement HySecurity Warranty form by calling HySecurity at 800-321-9947.

2. Exclusion of Other Warranties.

The warranties contained in Section 1 are the exclusive warranties given by HySecurity and supersede any prior, contrary or additional representations, whether oral or written. Any prior or extrinsic representations or agreements are discharged or nullified.

HYSECURITY HEREBY DISCLAIMS AND EXCLUDES ALL OTHER WARRANTIES—WHETHER EXPRESS, IMPLIED, OR STATUTORY—INCLUDING ANY WARRANTY OF MERCHANTABILITY, ANY WARRANTY OF FITNESS FOR A PARTICULAR PURPOSE, AND ANY IMPLIED WARRANTIES OTHERWISE ARISING FROM COURSE OF DEALING, COURSE OF PERFORMANCE, OR USAGE OF TRADE.

3. Buyer's Exclusive Remedies for Any Nonconformity.

If a HySecurity product fails to conform to the warranties in Section 1, Buyer must notify and order replacement parts from the Distributor through which the product was purchased within a reasonable time and in no event more than thirty (30) days after the discovery of the nonconformity. HySecurity will investigate and, in the event of a breach, will provide, within a reasonable period of time, one of the following: (1) repair or replacement of any nonconforming products or components or (2) refund of the price upon return of the nonconforming items. Replacement goods will conform to this warranty for the unexpired duration of the warranty period for the original, nonconforming product. HySecurity reserves the right to supply used or reconditioned material for all warranty claims. This warranty does not cover or extend to any incidental expenses, including labor, shipping, travel time or standby time, that are incurred for inspection or replacement of any nonconforming items. As a condition of warranty coverage, warranty claims must be submitted in accordance with the following paragraph.

THE REMEDY SELECTED BY HYSECURITY IN ACCORDANCE WITH THIS PARAGRAPH SHALL BE THE EXCLUSIVE AND SOLE REMEDY OF BUYER FOR ANY BREACH OF WARRANTY. IN NO EVENT SHALL HYSECURITY BE OBLIGATED TO INDEMNIFY BUYER FOR ANY BREACH OF WARRANTY.

For warranty coverage, you must follow the procedures described on HySecurity's form, "RMA Procedures." A current version of the form is available from HySecurity.

4. Exclusion of Consequential and Incidental Damages.

IN NO EVENT SHALL HYSECURITY BE LIABLE FOR ANY INCIDENTAL, SPECIAL, INDIRECT, OR CONSEQUENTIAL DAMAGES, WHETHER RESULTING FROM NONDELIVERY OR FROM THE USE, MISUSE, OR INABILITY TO USE THE PRODUCT OR FROM DEFECTS IN THE PRODUCT OR FROM HYSECURITY'S OWN NEGLIGENCE OR OTHER TORT.

This exclusion applies regardless of whether such damages are sought for breach of warranty, breach of contract, negligence, or strict liability in tort or under any other legal theory. This exclusion does not apply to claims for bodily injury or death.

5. Severability.

If any provision of this warranty is found to be invalid or unenforceable, then the remainder shall have full force and effect, and the invalid provision shall be partially enforced to the maximum extent permitted by law to effectuate the purpose of the agreement.

6. Applicable Law.

This Warranty will be interpreted, construed, and enforced in all respects in accordance with the laws of the State of Washington, without reference to its choice of law principles. The U.N. Convention on Contracts for the International Sale of Goods will not apply to this Warranty.

Specifications

Standard	StrongArmPark DC 10	StrongArmPark DC 14	Solar
Arm Length Capacity	10 ft (3 m)	14 ft (4.3 m)	
Field Adjustable Open/Close Time	Three speeds: 1.5, 2, and 2.5 seconds	Three speeds: 2.5, 3, and 3.5 seconds	
Full Open Angle	Adjustable 90°± 10°	Adjustable 90°± 10°	
Handing	Left handing standard. Easy to convert to right handing in field.	Left handing standard. Right handing optional.	
Maximum Gate/Arm Load	8 lbs/3.6 kg at 10 ft/3 m (0.8 lbs per foot, 0.4 kg per 30 cm)	11.2 lbs/5 kg at 15 ft/4.3 m (0.8 lbs per foot, 0.4 kg per 30 cm)	
Power: Single Phase (switch selectable)	115 Volts, 3 amps, 50/60 Hz 230 Volts, 1.5 amps, 50/60 Hz	115 Volts, 3 amps, 50/60 Hz 230 Volts, 1.5 amps, 50/60 Hz	24VDC
Duty Cycle	Continuous	Continuous	Continuous
Accessory Power	1A each at 12VDC, 24VDC & 24VAC	1A each at 12VDC, 24VDC & 24VAC	1A each: 12VDC & 24VDC
DC Batteries	Two 12VDC, 8Ah batteries. Field configurable to fail open or secure (close) when batteries deplete.		
Programmable Output Relays	Two configurable user relays: 30VDC, 3A Solid State and 250VAC, 10A electromechanical. Optional: Extended Relay Module (8 ports)		
User Controls	Smart DC Controller (32 character LCD display, 5 tact buttons). S.T.A.R.T. software with PC laptop.		
Communication	USB, RS-232, RS-485		
Temperature Rating	-13°F to 158°F (-25°C to 70°C) No heater necessary.		
UL 325 Compliant	Usage Class I,II, III, IV		
Limited Warranty	Operator: 2 years		

Copyright Notice

© Copyright 2014 by HySecurity Gate, Inc.

All rights reserved. No part of this manual may be reproduced by any means (photocopier, electronic, or mechanical), without the express written permission of HySecurity Gate, Inc. Federal copyright law prohibits the reproduction, distribution, or public display of copyrighted materials without the express written permission of the copyright owner, unless fair use or other exemption under copyright law applies. Additionally, HySecurity Gate, Inc. makes no representations or warranty with respect to this manual. We also reserve the right to make changes in the products described without notice and without any obligation to notify any persons of any such revision or change.

Trademarks

StrongArmPark DC, SwingSmart DC, SlideSmart DC, StrongArm M30, StrongArm M50, StrongArm, SlideDriver, SwingRiser, HydraSwing, HydraLift, SlideWinder, Smart DC Controller, Smart Touch Controller, S.T.A.R.T. and the HySecurity logo are trademarks or registered trademarks of HySecurity Gate, Inc.