SlideSmart™ CNX

SlideSmart CNX 15

Slide gate operator

EN - Advanced manual

 ©2020

SlideSmart CNX 15

Table of contents 2
Safety Requirements 3-10
Features 11
Unpack the Operator 12
Operator Position 13
Prepare an Installation Site 14-20
Attach Back Cover 21
Install Chain Kit 22
Rear Installation - Right Hand 23
Rear Installation - Left Hand 24
Attach Target Magnet and Chain Cover 25
Wiring and Power 26-28
Solar Power 29-31
Solar Power 32
Extended Battery Kit 33
Controller Connections 34
User Interface 35
Initial Setup 36
SmartCNX Controller Menus 37
Operator Configurations 38-39
Operator Functions 40-41
Operator Communications 42-43
Bi-Parting Gate Setup 44
Vehicle Detector Loop Layouts 45
Sequenced Gate: Loop View #1 46
Sequenced Gate: Loop View #2 47
Programmable Inputs 48-49
Controller Inputs 50
Entrapment Sensor Wiring - BlueBUS 51
Entrapment Sensor Wiring 52
List of Entrapment Sensors 53
Approved Sensor Wiring 54-56
Entrapment Sensor Response 58-59
IES Sensitivity and Wind Load Factor 60
User Relay Outputs 62-66
Relay Outputs - Basic 67
Relay Outputs - Mechanical 68
Relay Outputs - Solid State 69
Loop Options 70-72
SmartCNX - Hy5B Module 73
SmartCNX - Hy5B Loop Diagnostics 74
SmartCNX - Hy5B Loop Diagnostics 75
External Communications 76-77
Firmware Updates and Debug Data 78
Connect to The SmartCNX Installer App 79
External Communications 80-81
OXI Installation and Programming 82
Expansion Board Inputs 84
I/O Expansion Module Mounting and Wiring 85
Diagnostics Menu 86
24 7 Clock and Timer 87
Maintenance 88
Additional Safety Information 89-90
Troubleshooting/Alerts/Faults/Errors 91-97
Appendix B - French Translations 98-101
Warranty 102
Specifications 104

Visit support.hysecurity.com for Installation manuals, replacement part instructions, part diagrams, and more.

SAFETY MESSAGES

The safety messages below inform you about potential hazards that can result in injury. Safety messages specifically address level of exposure to operator and are preceded by one of four words: **DANGER, WARNING, CAUTION** or **NOTICE.**

DANGER

Indicates a hazardous situation which, if not avoided, **WILL** result in **DEATH** or **SERIOUS INJURY.**

WARNING

Indicates a hazardous situation which, if not avoided, **COULD** result in **DEATH** or **SERIOUS INJURY.**

CAUTION

Indicates a hazardous situation which, if not avoided, **COULD** result in **MINOR** or **MODERATE INJURY.**

NOTICE

Addresses practices not related to personal injury. Indicates damage to equipment is probable if the hazardous situation is not avoided.

COMMON INDUSTRIAL SYMBOLS

These international safety symbols may appear on product or in its literature to alert of potential personal injury hazards. Obey all safety messages that follow these symbols to avoid possible injury or death.

Symbol	Safety Hazard
	Attention - Take Notice
	Danger - Keep Away
	Entrapment Zone
	Possible Pinch Point

IMPORTANT SAFETY INSTRUCTIONS

Hazards, associated with automatic gates, can be reduced with proper site design, installation, and use. Installers, maintenance crews, and owners/users must read and follow the safety requirements found in HySecurity® product manuals.

It is important that only qualified installers handle installation of HySecurity Gate vehicular gate operators. A “qualified” installer has one of the following:

1. A minimum of three years experience installing similar equipment.
2. Proof of attending a HySecurity Technical Training seminar within the past three years.
3. Significant manufacturer endorsements of technical aptitude in gate operator installation and operation.

Underwriter Laboratories (UL) and the American Society for Testing and Materials (ASTM) are responsible for current safety standards and regulations regarding gate operators and automated gates. All aspects of gate installation must comply with the appropriate safety standard. For the most up-to-date ASTM F2200 Gate and Fence Standards, refer to www.astm.org. For UL 325 Safety Standard, refer to www.ul.com. Consult local government agencies for up-to-date rules and regulations as certain municipalities have established licensing, codes or regulations that regulate automated gate system design and installation.

WARNING

To reduce the risk of injury or death:

1. READ AND FOLLOW ALL INSTRUCTIONS.
2. Never let children operate or play with gate controls. Keep the remote control away from children.
3. Always keep people and objects away from the gate. NO ONE SHOULD CROSS THE PATH OF THE MOVING GATE.
4. Test the gate operator monthly. The gate MUST reverse on contact with a rigid object or stop when an object activates the non-contact sensors. After adjusting the force or the limit of travel, retest the gate operator. Failure to adjust and retest the gate operator properly can increase the risk of injury or death.
5. Use the emergency release only when the gate is not moving.
6. KEEP GATES PROPERLY MAINTAINED. Read the user’s manual. Have a qualified service person make repairs to gate hardware.
7. The entrance is for vehicles only. Pedestrians must use separate entrance.
8. SAVE THESE INSTRUCTIONS.

GENERAL SAFETY INFORMATION

A gate operator is only a component in a gate system. The other parts of the gate system can include the gate, the external safety sensors, access controls, and vehicle detectors. To have a gate system that provides for safety, security, and reliable operation it is essential these components operate together as a system. It is the responsibility of the system designer and/or installer to ensure any safety or operational issues have been addressed.

IDENTIFYING GATE OPERATOR CATEGORY AND UL 325 USAGE CLASS

The UL 325 standard covers gate operators. Within this safety standard several Usage Classes are described that define different types of installations where gate operators can be applied. Some operators are restricted in their usage application. Appropriate Usage Classes are shown in the Specifications.

Class I

Class I: Intended for use in a location of one to four single family dwellings or a parking area associated with one to four single family dwellings.

Class II

Class II: Intended for use in a commercial location or building such as a multi-family housing units (five or more single family units) hotels, garages, retail stores or other buildings servicing general public.

Class III

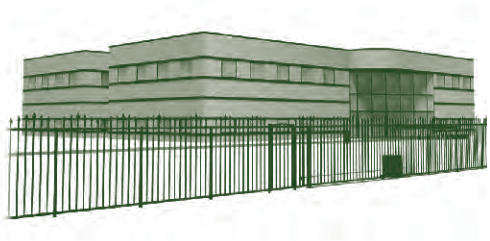

Class III: Intended for use in an industrial location or building such as factories or loading docks or other locations not accessible by the general public.

Class IV

Class IV: Intended for use in guarded industrial locations or buildings such as an airport security area or other restricted access location, not servicing general public, in which access is monitored by security personnel or via closed circuitry.

VEHICULAR TRAFFIC ONLY

WARNING

This automatic gate operator is not designed nor is it intended for pedestrian traffic. Vehicular gate operators must by their nature be powerful to function reliably. This power can cause injury or death. Accordingly, direct all pedestrian traffic to a separate walk-through gate.

Install this gate operator only when:

- The operator is appropriate for the construction of the gate and the usage Class of the gate.
- All openings of a horizontal slide gate are guarded or screened from the bottom of the gate to a minimum of 1.83 m (6 ft) above the ground to prevent a 57.2 mm (2-1/4 in) diameter sphere from passing through the openings anywhere in the gate, and in that portion of the adjacent fence that the gate covers in the open position.
- All exposed pinch points are eliminated or guarded.
- Guarding is supplied for exposed rollers.

The operator is intended for installation only on gates used for vehicles. Pedestrians must be supplied with a separate access opening. The pedestrian access opening shall be designed to promote pedestrian usage. Locate the gate such that persons will not come in contact with the vehicular gate during the entire path of travel of the vehicular gate.

The gate must be installed in a location so that enough clearance is supplied between the gate and adjacent structures when opening and closing to reduce the risk of entrapment. Swinging gates shall not open into public access areas.

The gate must be properly installed and work freely in both directions prior to the installation of the gate operator. Do not over-tighten the operator clutch or pressure relief valve to compensate for an improperly installed, improperly functioning, or damaged gate.

Permanently mounted controls intended for user activation must be located at least 1.83 m (6 ft) away from any moving part of the gate and where the user is prevented from reaching over, under, around or through the gate to operate the controls.

- Exception: Emergency access controls only accessible by authorized personnel (e.g. fire, police, EMS) may be placed at any location in the line-of-sight of the gate.

The Stop and/or Reset button must be located in the line-of-sight of the gate. Activation of the reset control shall not cause the operator to start.

A minimum of two (2) WARNING SIGNS shall be installed, in the area of the gate. Each placard is to be visible by persons located on the side of the gate on which the placard is installed.

For gate operators utilizing a non-contact sensor (Photo Eye):

- See instructions on the placement of non-contact sensors for each type of application.
- Care shall be exercised to reduce the risk of nuisance tripping, such as when a vehicle trips the sensor while the gate is still moving.
- One or more non-contact sensors shall be located where the risk of entrapment or obstruction exists, such as the perimeter reachable by a moving gate or barrier.

For a gate operator utilizing a contact sensor (Edge):

- One or more contact sensors shall be located where the risk of entrapment or obstruction exists, such as at the leading edge, trailing edge, and postmounted both inside and outside of a vehicular horizontal slide gate.
- A hardwired contact sensor shall be located and its wiring arranged so that the communication between the sensor and the gate operator is not subjected to mechanical damage.
- A wireless device such as one that transmits radio frequency (RF) signals to the gate operator for entrapment protection functions shall be located where the transmission of the signals are not obstructed or impeded by building structures, natural landscaping or similar obstruction. A wireless device shall function under the intended end-use conditions.
- One or more contact sensors shall be located on the inside and outside leading edge of a swing gate. Additionally, if the bottom edge of a swing gate is greater than 152 mm (6 in) but less than 406 mm (16 in) above the ground at any point in its arc of travel, one or more contact sensors shall be located on the bottom edge.

USE OF VEHICLE DETECTORS

Use of vehicle detectors (loop detectors) is strongly encouraged to prevent damage to vehicles caused by gates closing on them. This is not considered to be a safety item as vehicle detectors cannot provide protection to pedestrians. In some situations, photoelectric devices may be used as vehicle detectors, but should be wired accordingly.

GATE CONSTRUCTION AND SAFETY

Gate construction plays a very important role in ensuring the safety of any automated gate system. The standard for gate construction is ASTM F2200. Below are key areas to address in gate design for safety. For complete information consult the standard. Copies of the standard are available at:

https://www.astm.org/Standards/F2200.htm.

Another source of information is available from DASMA, the Door and Access System Manufacturer's Association. The Association publishes Technical Data Sheets, one of which concerns ASTM F2200. For more information, see:

http://www.dasma.com/PDF/Publications/TechDataSheets/OperatorElectronics/TDS370.pdf.

General Requirements for gate construction:

- Gates shall be constructed in accordance with the provisions given for the appropriate gate type listed. Refer to ASTM F2200 for additional gate types.
- Gates shall be designed, constructed and installed to not fall over more than 45 degrees from the vertical plane, when a gate is detached from the supporting hardware.
- Gates shall have smooth bottom edges, with vertical bottom edged protrusions not exceeding 0.50 in (12.7 mm) other than the Exceptions listed ASTM F2200.
- The minimum height for barbed wire shall not be less than 6 ft (1.83 m) above grade. The minimum height for barbed tape shall not be less than 8 ft (2.44 m) above grade.
- An existing gate latch shall be disabled when a manually operated gate is retrofitted with a powered gate operator.
- A gate latch shall not be installed on an automatically operated gate.
- Protrusions shall not be permitted on any gate. Consult ASTM F2200 for exceptions.
- Gates shall be designed, constructed and installed such that their movement shall not be initiated by gravity when an automatic operator is disconnected.
- For pedestrian access in the vicinity of an automated vehicular gate, a separate pedestrian gate shall be provided. The pedestrian gate shall be installed in a location such that a pedestrian shall not come in contact with a moving vehicular access gate. A pedestrian gate shall not be incorporated into an automated vehicular gate panel.
- Any non-automated gate that is to be automated shall be upgraded to conform to the provisions of this specification.
- This specification shall not apply to gates generally used for pedestrian access and to vehicular gates not to be automated.
- Any existing automated gate, when the operator requires replacement, shall be upgraded to conform to the provisions of this specification in effect at that time.

The following requirements shall apply to Class I, Class II, Class III, and Class IV vehicular horizontal slide gates:

All weight bearing exposed rollers 8 ft (2.44 m), or less, above grade shall be guarded or covered.

All openings shall be designed, guarded, or screened from the bottom of the gate to the top of the gate or a minimum of 72 inch (1.83 m) above grade, whichever is less, to prevent a 2-1/4 inch (57 mm) diameter sphere from passing through the openings anywhere in the gate, and in that portion of the adjacent fence that the gate covers in the open position. The gate panel shall include the entire section of the moving gate, including any back frame or counterbalance portion of the gate.

A gap, measured in the horizontal plane parallel to the roadway, between a fixed stationary object nearest the roadway (such as a gate support post) and the gate frame when the gate is in either the fully open position or the fully closed position, shall not exceed 2-1/4 inches (57 mm).

- Exception: All other fixed stationary objects greater than 16 inches (406 mm) from the gate frame shall not be required to comply with this section.

Positive stops shall be required to limit travel to the designed fully open and fully closed positions. These stops shall be installed at either the top of the gate, or at the bottom of the gate where such stops shall horizontally or vertically project no more than is required to perform their intended function.

All gates shall be designed with sufficient lateral stability to assure that the gate will enter a receiver guide. Consult ASTM F2200 for details on various gate panel types.

MAINTENANCE OF GATE SYSTEMS

To keep your automated gate system performing both safely and reliably it is important to ensure that the components of that system are functioning properly.

At least monthly:

- Disconnect the gate operator and manually move the gate through its range of travel. Note any squeaks from rollers or hinges or areas of binding. The gate should travel smoothly and quietly throughout its range. If it does not, contact a gate professional to correct the problem.
- Reconnect the gate operator and perform the following tests:
  - With the gate opening, block any photo eyes and/or depress any safety edges used to protect the open direction. The gate should stop and/or reverse.
  - With the gate closing, block any photo eyes and/or depress any safety edges used to protect the close direction. The gate should stop and/or reverse.
  - Using a suitable obstruction in the path of the gate (a solid, immovable object), run the gate in the open direction until it contacts the obstruction. The gate should stop and reverse.
  - Using a suitable obstruction in the path of the gate (a solid, immovable object), run the gate in the close direction until it contacts the obstruction. The gate should stop and reverse.

ENTRAPMENT PROTECTION

The UL 325 standard for gate operators requires a minimum of two independent entrapment protection means for each entrapment zone.

An entrapment zone is defined as follows:

For slide gates, any locations between a moving gate and a counter opposing edge or surface where entrapment is possible up to a height of 6 ft (1.83 m) above grade. Such locations occur if at any point in travel the gap between a moving gate and the fixed counter opposing edges or surfaces is less than 16 inches (406 mm).

All Nice HySecurity gate operators feature an Inherent Entrapment System (IES) (UL 325 Type A) that monitors the force on the gate during travel. This system protects in both the open and close direction and reverses on contact with an obstruction. The IES serves as one of the means of entrapment protection.

Potential entrapment zones are shown on the next page for slide gates, but keep in mind there may be other entrapment zones presented by the actual installation and adjacent structures or landscape that must be protected as well. External sensors must be used to protect against entrapment at each location where an entrapment zone exists. The minimum number of external sensors required to enable automatic operation of the gate operator is as follows:

- Slide Gates: One external sensor in the Open direction and one external sensor in the Close direction.

The gate operator tests for the presence of these sensors, and if the required minimum number is not found, the operator will only run using continuous pressure on an Open/Close button, either on the controller, or an external device.

Installers must identify all potential entrapment zones and install sensors that protect these areas.

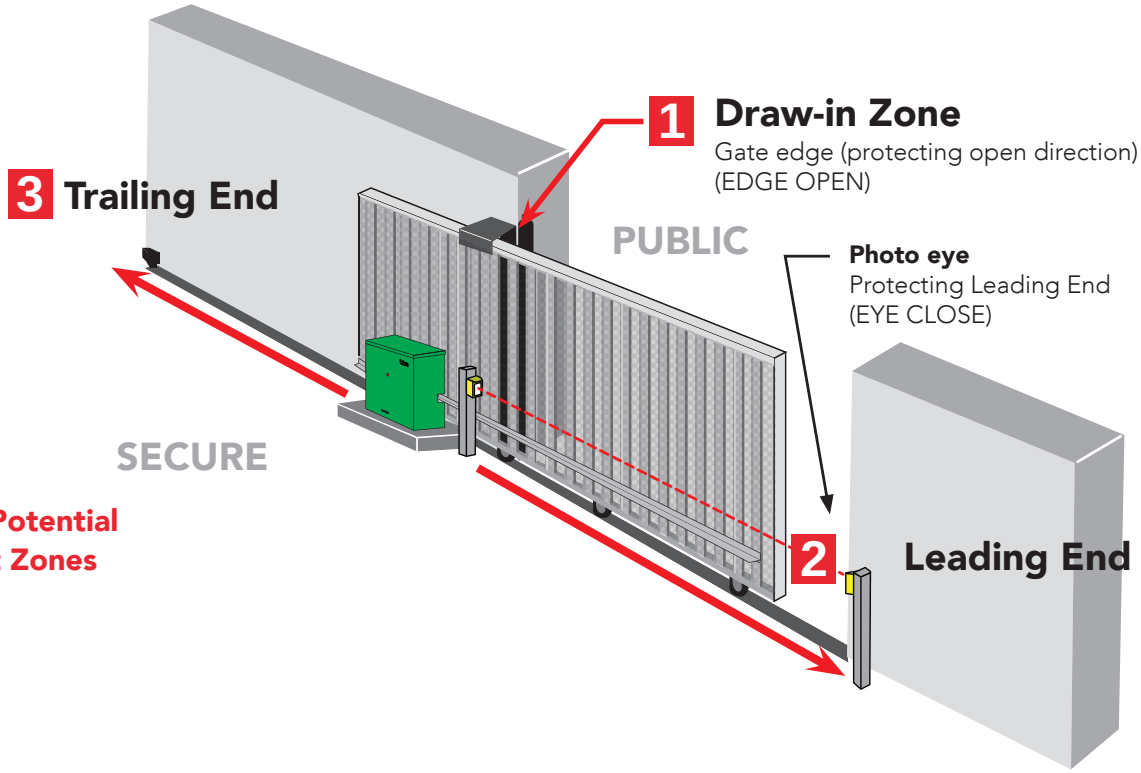

Slide Gate Potential Entrapment Zones

1. Draw-in zone
2. Leading end
3. Trailing end

STOP BUTTON

The stop button clears entrapment mode and resets some faults, errors, and alarms.

The stop button on SmartCNX operators is located on the cover.

Press the stop button while the gate is opening or closing to stop gate travel and disable the automatic close timer. The operator requires a new open or close command to resume function.

Inform all users of the location of the stop button and its function.

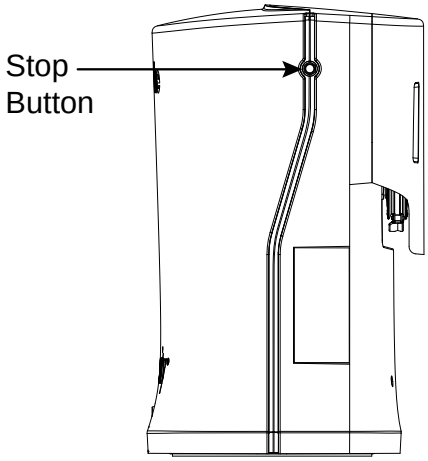

Figure 1. Stop Button

EMERGENCY RELEASE

Teach all users how to turn off electric power and backdrive the operator.

To manually release the gate:

1. Remove the front cover.
2. Set DC power to OFF to disengage the motor.

Note: With DC switch OFF and AC switch ON, the software will monitor gate position during backdrive.

3. Manually push the gate open or close.

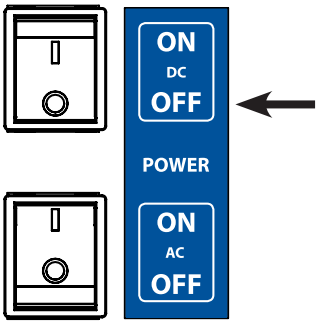

Figure 2. DC Switch Set to OFF

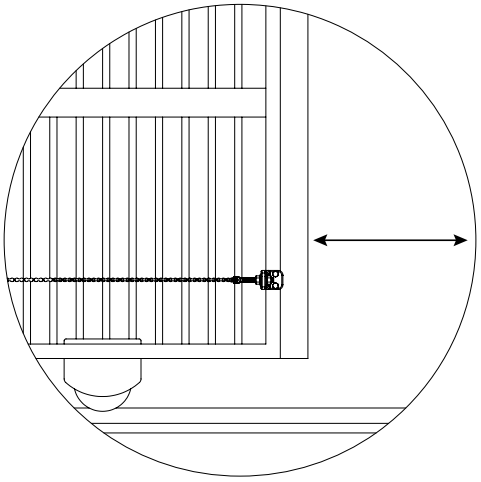

Figure 3. Slide the Gate Manually

To return SlideSmart to automatic operation, follow these steps:

1. Set the DC power switch to ON.
2. Press STOP or RESET to clear any faults.
3. Attach the front cover.

Note: If both DC and AC switches are OFF, the operator will search for the target magnet to establish limits upon power up. If the target magnet is not recognized, the operator will enter Learn Limits mode.

INTELLIGENT FEATURES: SmartCNX™ Controller

SmartCNX installer smartphone app for full control from your phone via Bluetooth.

Save operator configurations and troubleshoot system via installer smartphone app or USB.

User Interface – The SmartCNX controller manages 70+ configurable items in a simple menu driven interface. The controller includes a library of dozens of solutions for relay logic applications.

Three configurable user relays plus optional SmartCNX I/O Expansion module for 8 additional relay outputs.

OLED display – A 32-character OLED provides increased readability for programming and troubleshooting.

Independent adjustment for open and close gate speeds - An easy-to-use menu on the SmartCNX Controller allows the installer to independently vary the open and close speed settings.

Intelligent Inherent Entrapment Sensor (IES) - Any impediment to gate travel is sensed by the system, stopping gate movement per UL 325 Safety Standards. The intelligent system monitors gate power then adapts the IES to trip at an adjustable threshold above normal power.

Hy5B™ 2.0 vehicle detector – Four ports for HySecurity Hy5B 2.0 vehicle detectors, enabling advanced features like automatic gate compensation and loop diagnostics.

Integrated HyNet™ technology provides remote management capabilities over Ethernet: Securely report gate system status, vehicle tailgating, gate hits, failure to operate, and more, in real time to maintain perimeter security. Additionally, configure email alerts to communicate issues to installer, facility or security responders.

Compatible with Nice accessories. OXI receiver, ERA and INTI transmitters and BlueBUS photo eyes.

UNPACK THE OPERATOR

1. Open the box and remove the front cover, chain cover, rear cover, edge sensor, photo eye, chain hardware kit, and ship with kit.
2. Check the contents of the ship with kit:
   a. Basic Manual
   b. UL 325 required gate safety signs and zip ties
   c. DASMA gate safety literature
   d. Rear cover mounting hardware
   e. Cover keys
   f. Chain cover lock pin
   g. Optional 208/230VAC and 24VDC voltage labels
3. Lift the chassis using the lift handles.

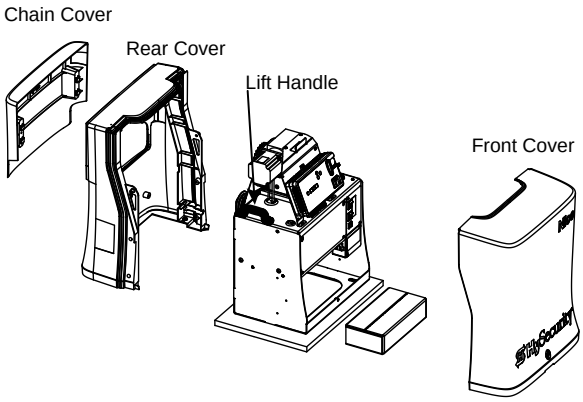

Note: You can mark the slots and conduit area on the plywood underneath the chassis and then use the plywood as an anchor hole template.

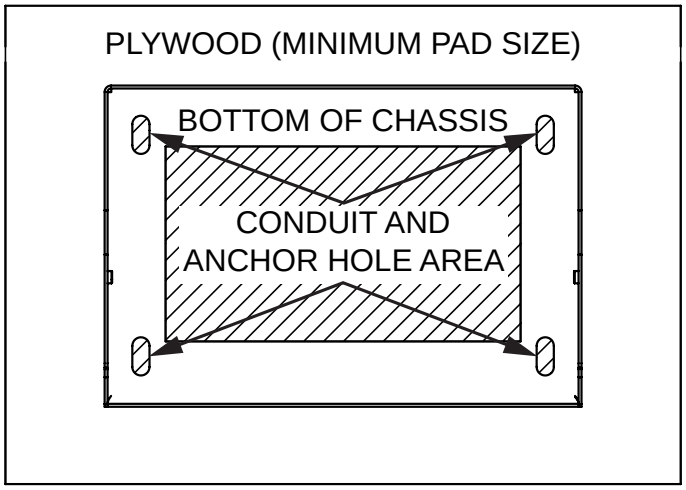

GENERAL OPERATOR DIMENSIONS

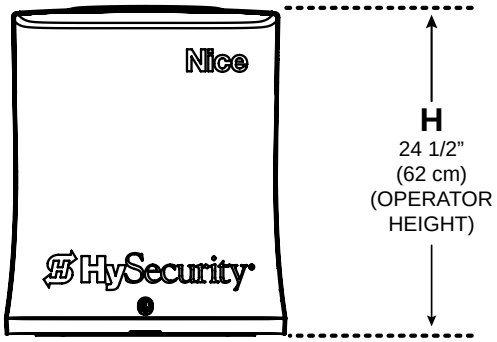

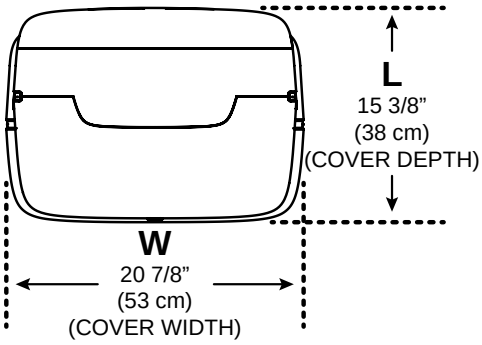

NEW INSTALLATION

1. Determine the location of the operator from the gate (Figure 4).
2. Refer to Figure 4 for minimum dimensions for a new concrete pad. Refer to Figure 6 for conduit and earth ground requirements.
3. Make sure the pad is completely level before installation.
4. Mark the anchor hole positions on the concrete pad (Figure 4).
5. Remove the operator and drill holes for four 1/2 inch UNC x 3-1/2 inch wedge style anchors.
6. Install the anchor bolts and mount the operator on the bolts.
7. Check the level of the operator and shim as necessary.
8. Put a heavy duty flat washer on each bolt and tighten the anchor-bolt nuts.
9. Bury the earth ground rod and connect earth ground wire to the chassis ground lug.

RETROFIT INSTALLATION

1. Remove any existing operator and anchor bolts.
2. Check the level of the concrete pad and level it if needed.
3. Position the new SlideSmart CNX operator around the conduit and parallel to the gate.
4. Mark the new anchor locations (Figure 4).
5. Remove the operator and drill holes for four 1/2 inch UNC x 3-1/2 inch wedge style anchors.
6. Install the anchor bolts and mount the operator on the bolts.
7. Check the level of the operator and shim as necessary.
8. Put a heavy duty flat washer on each bolt, and tighten the anchor-bolt nuts.
9. Route the earth ground wire and connect it to the earth ground lug.

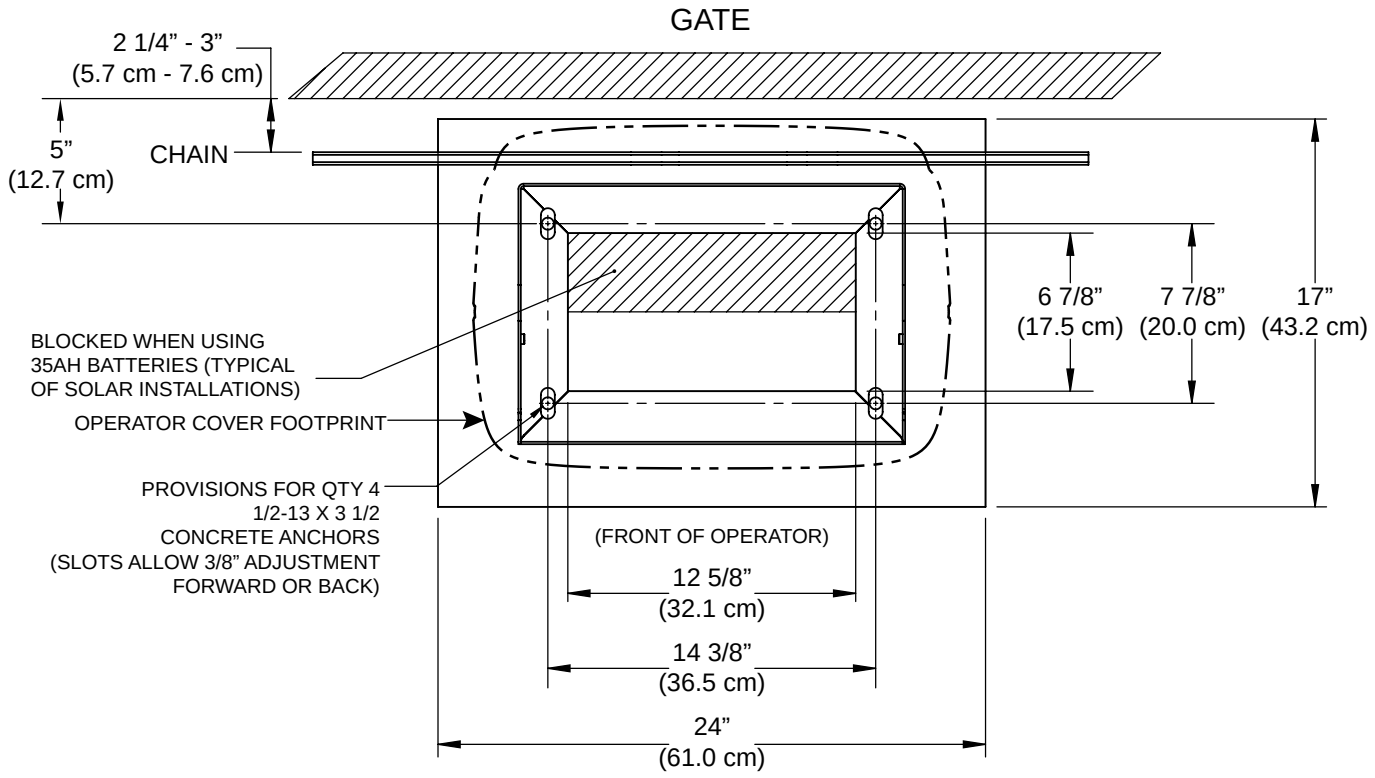

Figure 4. Concrete Pad, Anchor Hole, and Conduit Dimensions

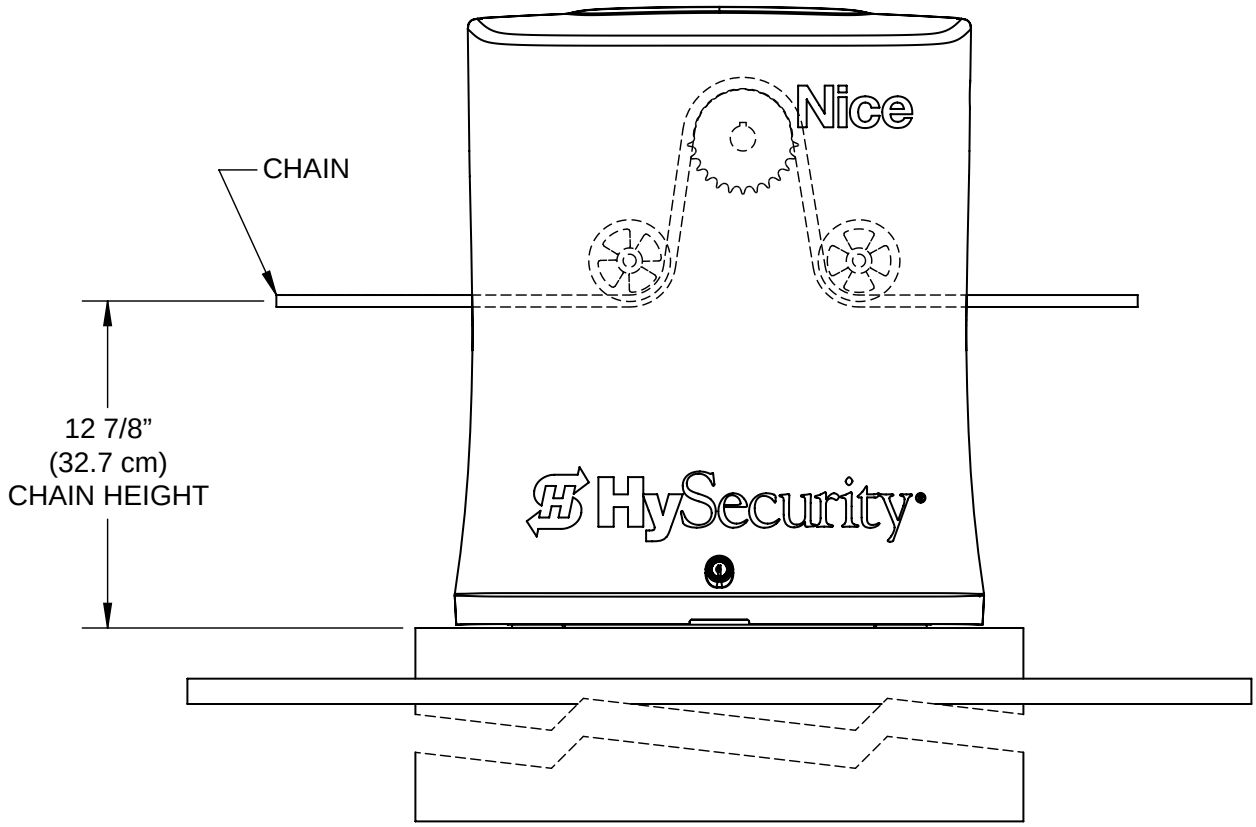

Figure 5. Front Installation Chain Height

HySecurity requires a concrete pad with a minimum 2 inch extension above ground and a pad depth of 16 inch or at least to the frost line, whichever is deeper. Follow local building codes to identify the frost line.

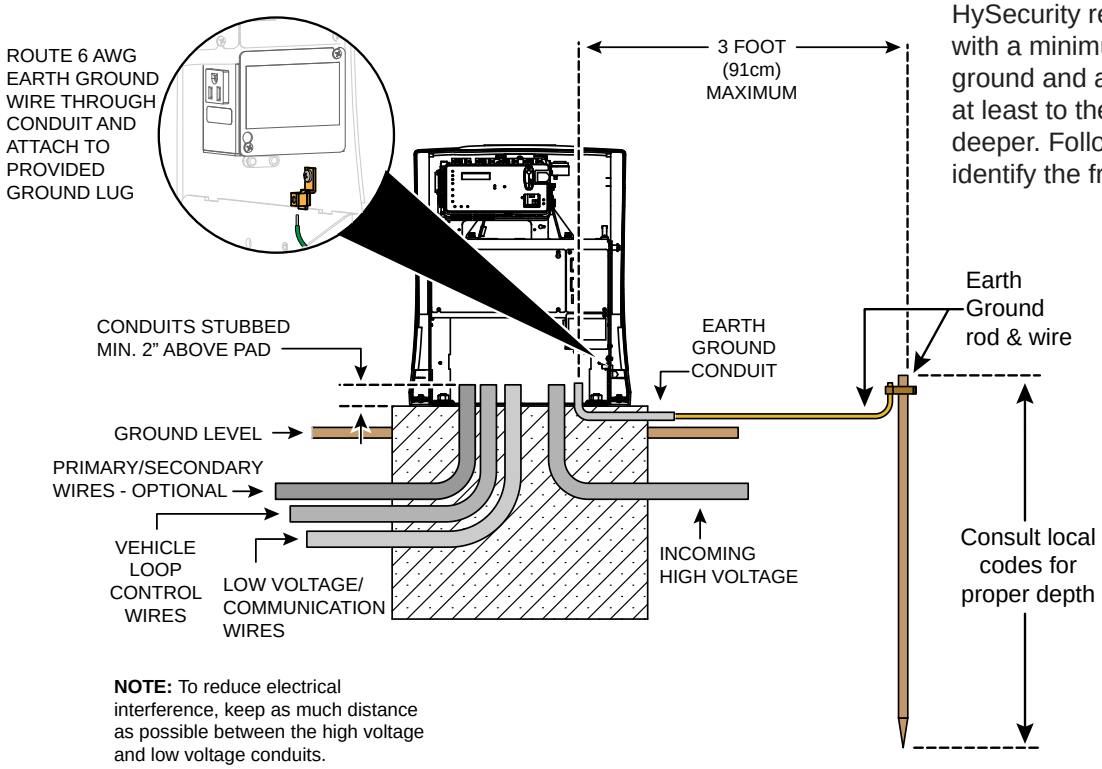

DANGER The potential for lightning discharge exists with all gates, fences, and gate operators. National Electric Code (NEC) requires a separate earth ground in addition to the required equipment ground. A local earth ground also serves to protect the electronic controls.

Figure 6. Conduits and Earth Ground

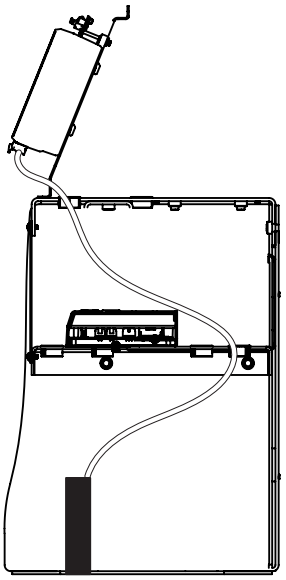

Figure 7. Preferred Control Wire Routing to SmartCNX Controller

2 INTERNAL POST MOUNT, 4"-5" OD, U-BOLT ATTACHMENT

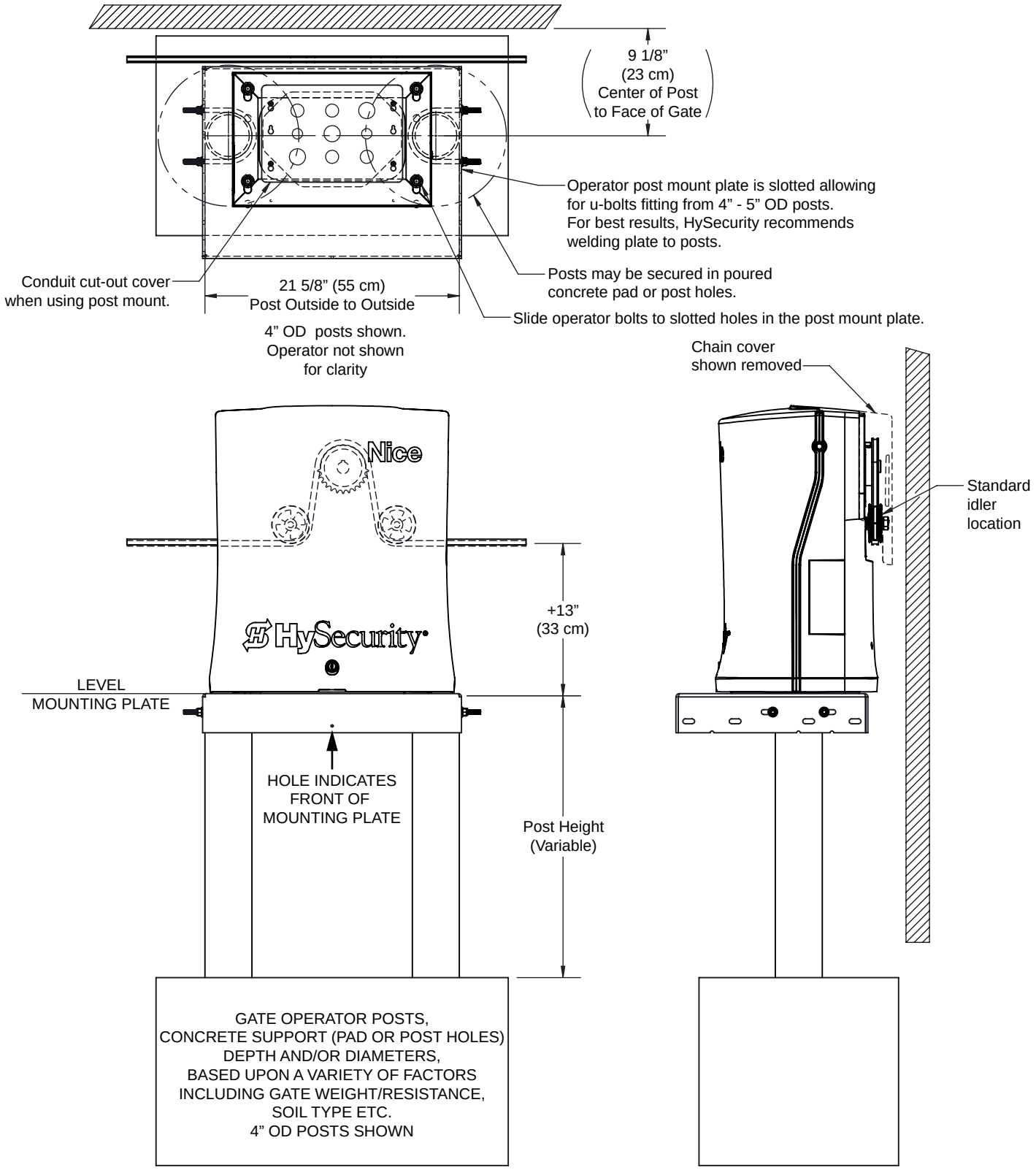

2 EXTERNAL POST MOUNT, 4"-5" OD, U-BOLT ATTACHMENT

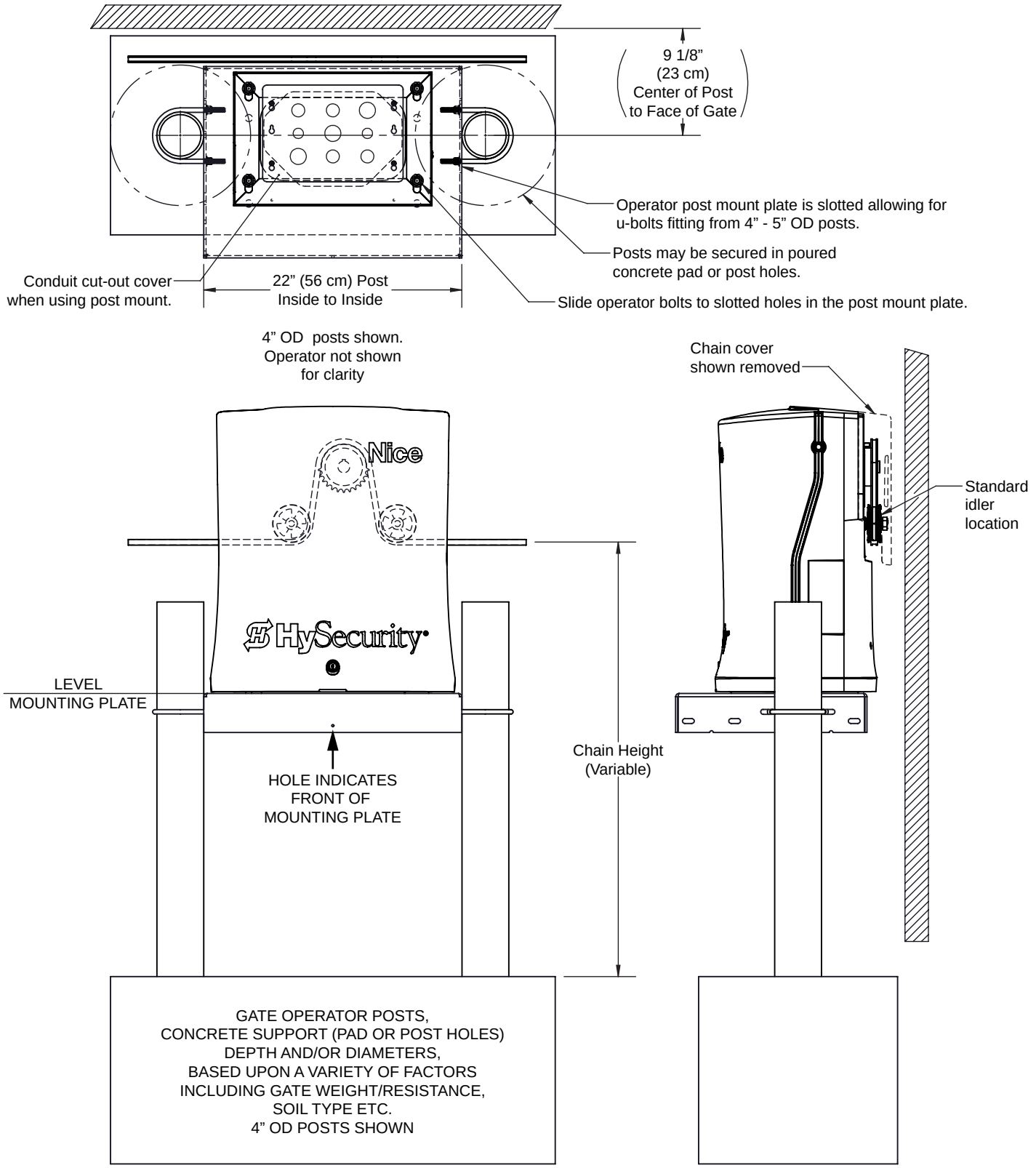

4 INTERNAL POST MOUNT, 3" OD, U-BOLT ATTACHMENT

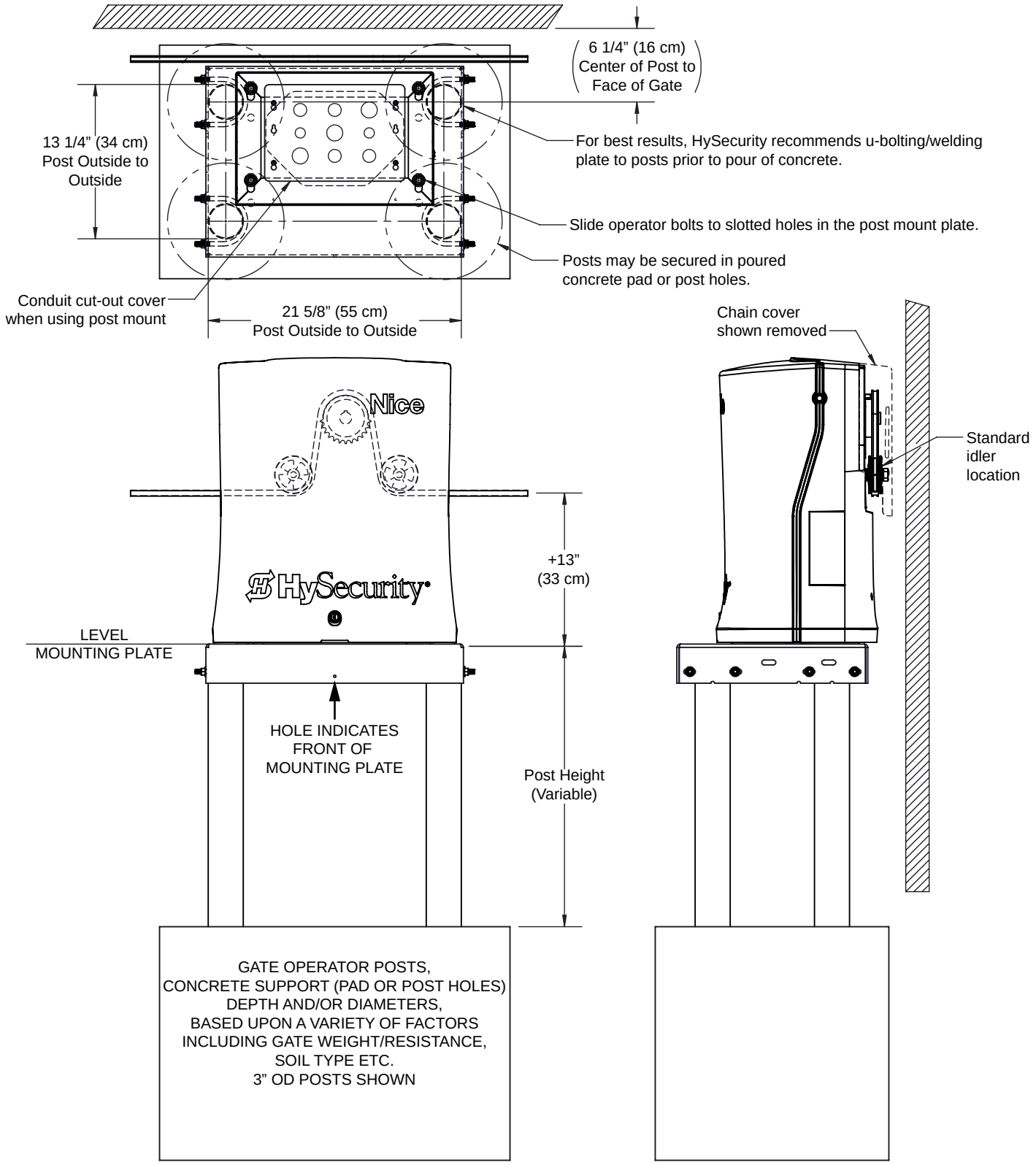

4 EXTERNAL POST MOUNT, 3" OD, U-BOLT ATTACHMENT

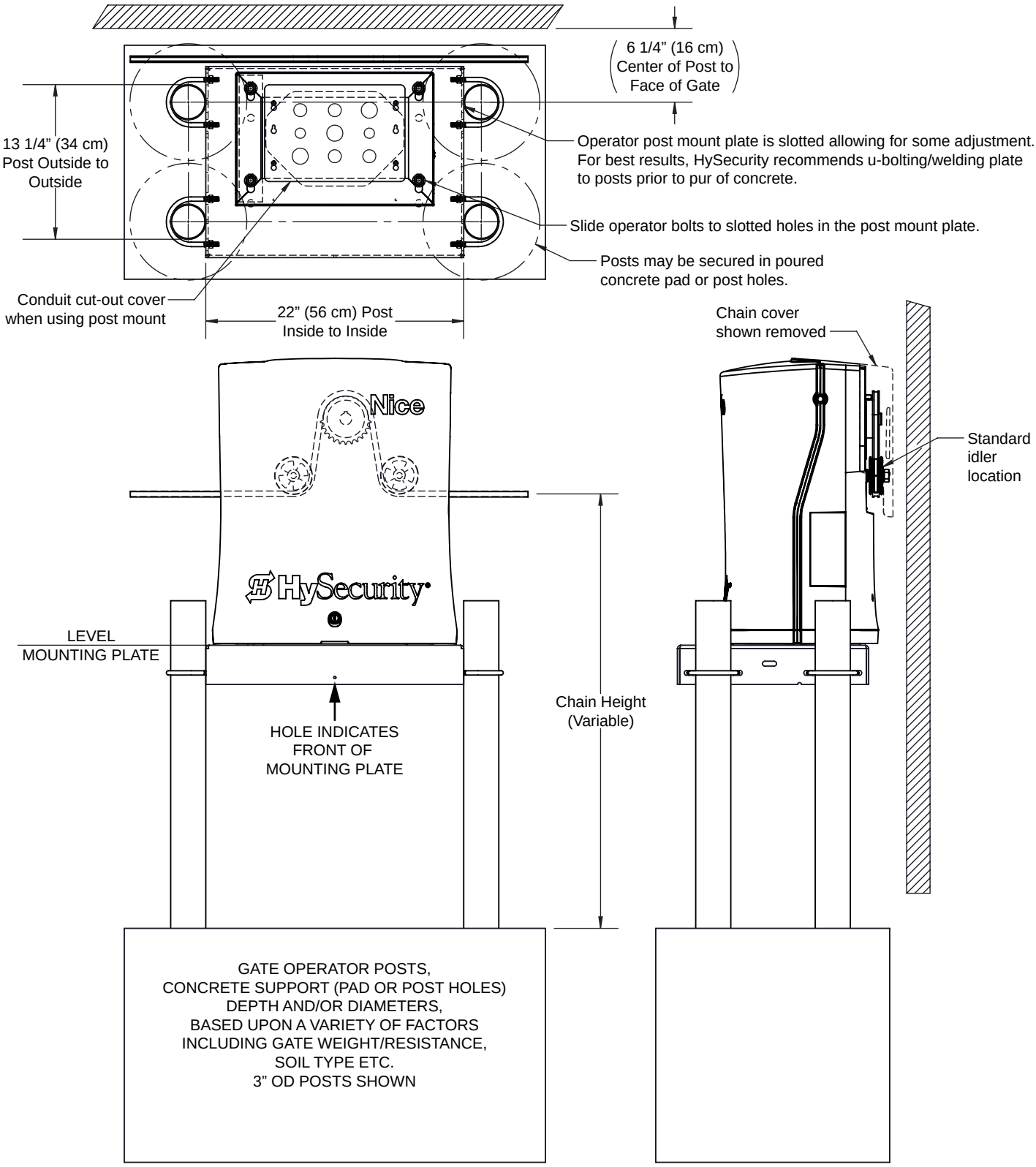

4 INTERNAL POST MOUNT, 3" OD, WELD ATTACHMENT

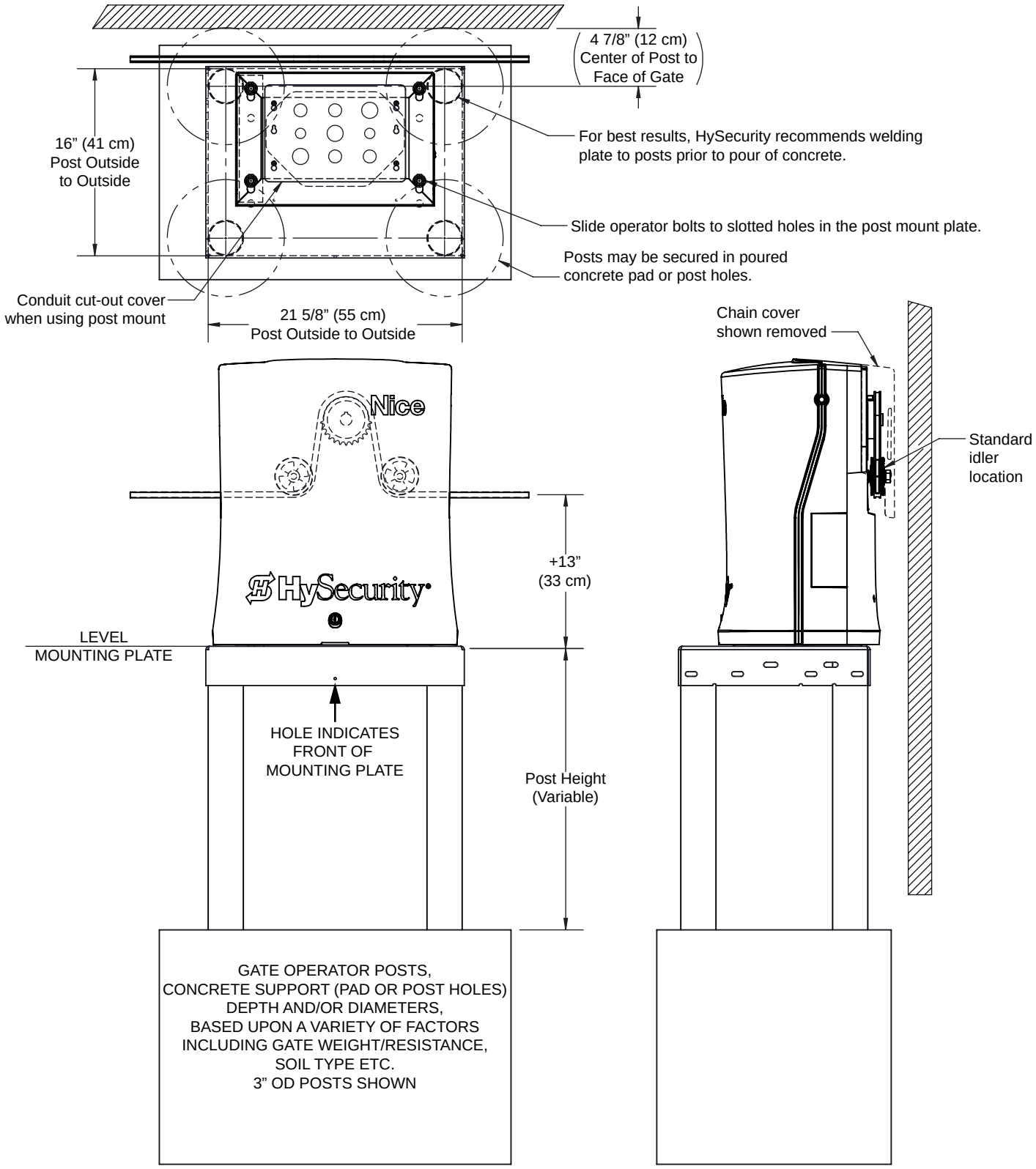

Attach the back cover before you install the chain.

1. If 208V/230V AC incoming power is used, set the voltage switch on the power supply to the correct setting with a flathead screwdriver before you attach the back cover. Refer to page 26 for more information.
2. Set the back cover on the chassis (A).

Note: Make sure that the vertical tab on the controller mounting bracket is behind the gasket groove in the back cover (B).

3. Tighten the back cover bolts to snug, sides first, and then the back (C).
4. Connect wires to stop button (D).

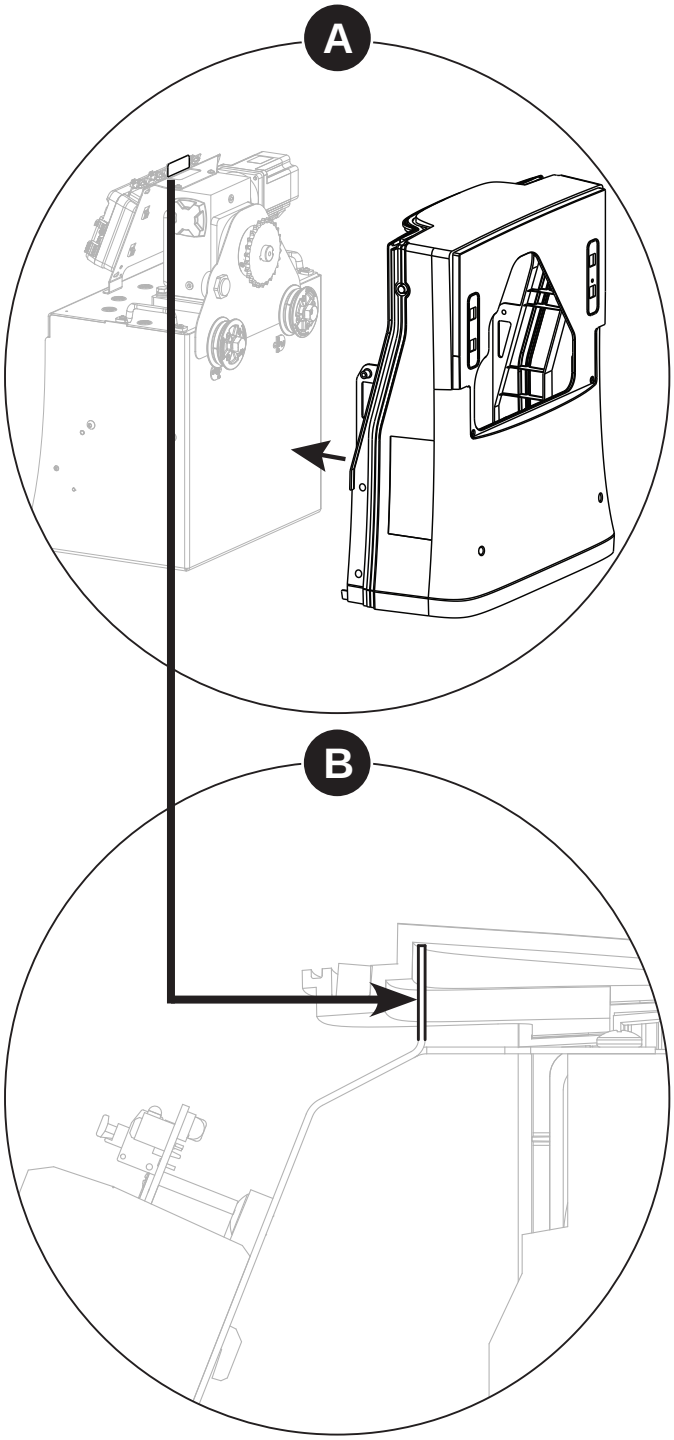

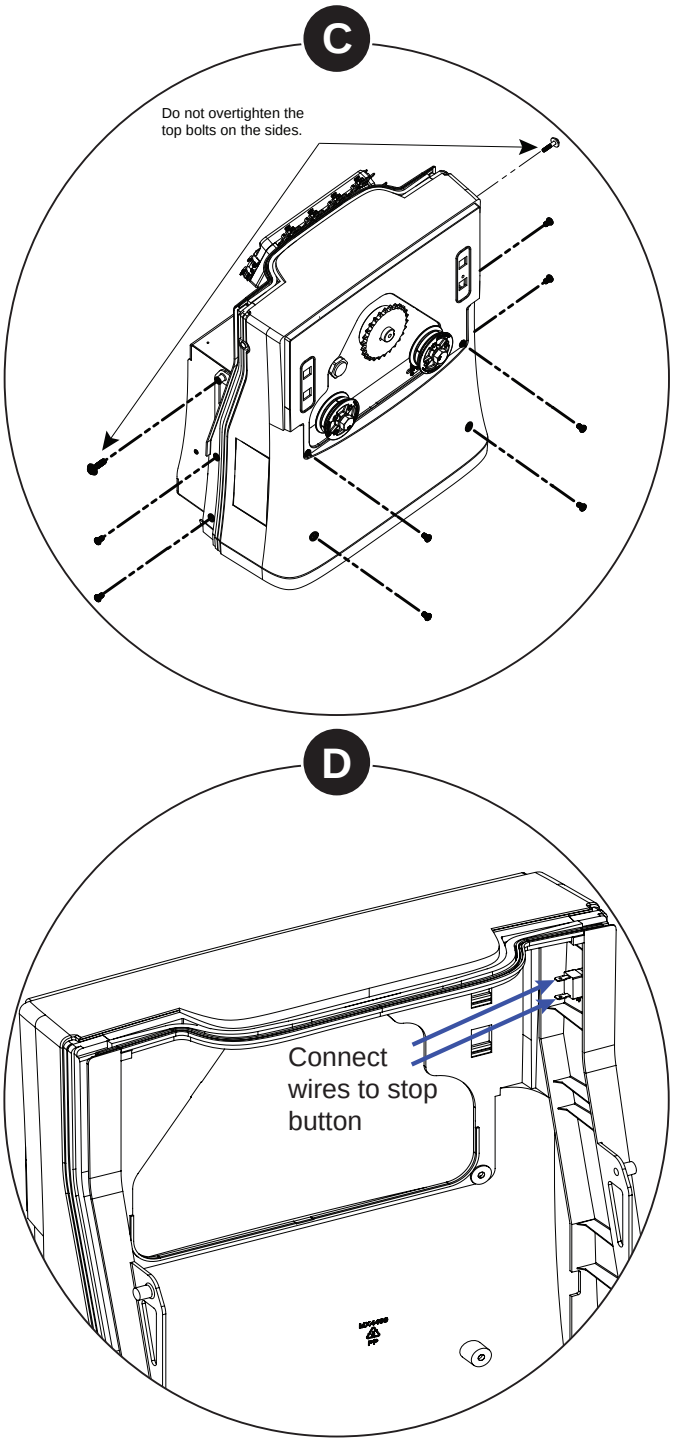

INSTALL CHAIN KIT

1. Set the DC and AC switches to OFF before you install the chain kit.
2. Install the back cover before you install the chain kit, page 21.
3. Secure the gate so that it does not move.
4. Position the gate brackets with the center of the chain hole at 12-7/8 inch height from the bottom of the operator.
5. Mark the hole positions, drill holes through the gate, put bolts through the holes, and fasten the bolts in place.
6. Alternatively, weld the gate brackets in place (Figure 8 and Figure 9).
7. Attach a tension bolt to each gate bracket (Figure 10).
8. Route the chain through the idlers and sprocket (Figure 11).
9. Connect chain ends to tension bolts with connector link.
10. Check the length of the chain. Add or remove chain links to make sure chain is within adjustment.
11. Adjust the bracket eye bolts to reduce sag in the chain to a maximum of 1 inch per 10 feet of chain.
12. Chain must be parallel to ground and gate (Figure 9, Figure 12, Figure 13).

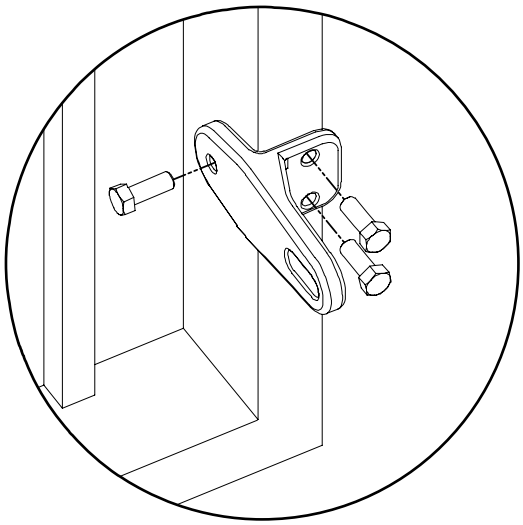

Figure 8. Attach Gate Bracket

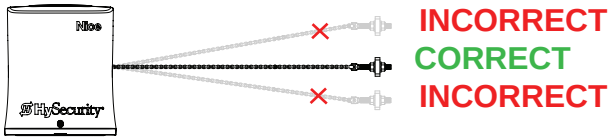

Figure 9. Correct Bracket Height

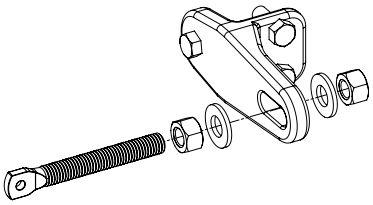

Figure 10. Attach Tension Bolt

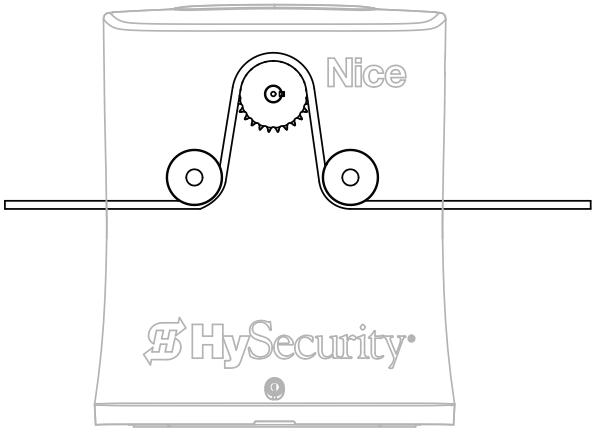

Figure 11. Front Installation Chain Route

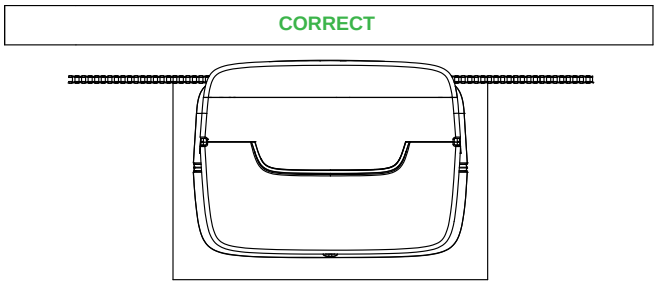

Figure 12. Correct Distance to Gate

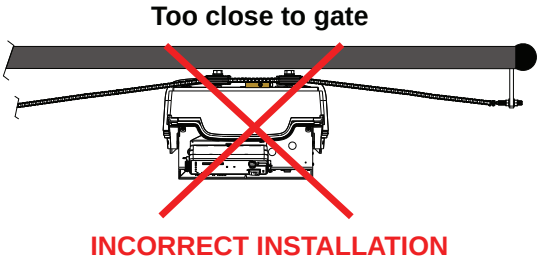

Figure 13. Incorrect Distance to Gate

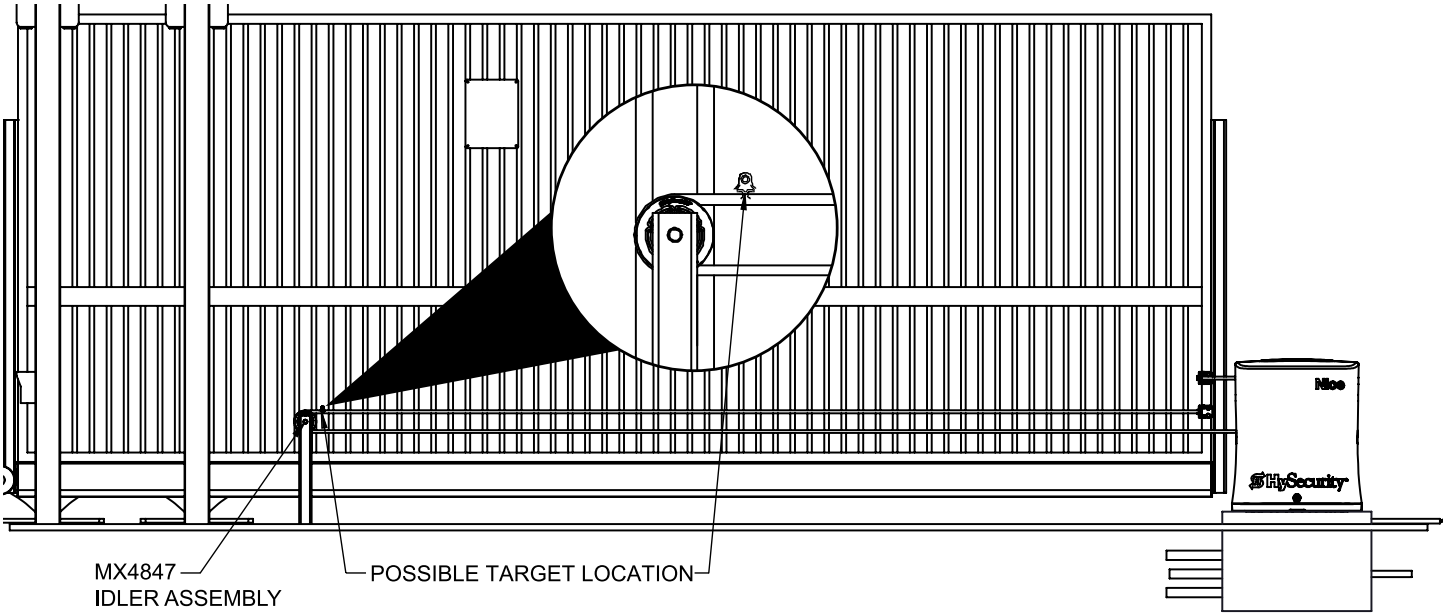

SlideSmart CNX: REAR MOUNTED INSTALLATION - OPEN

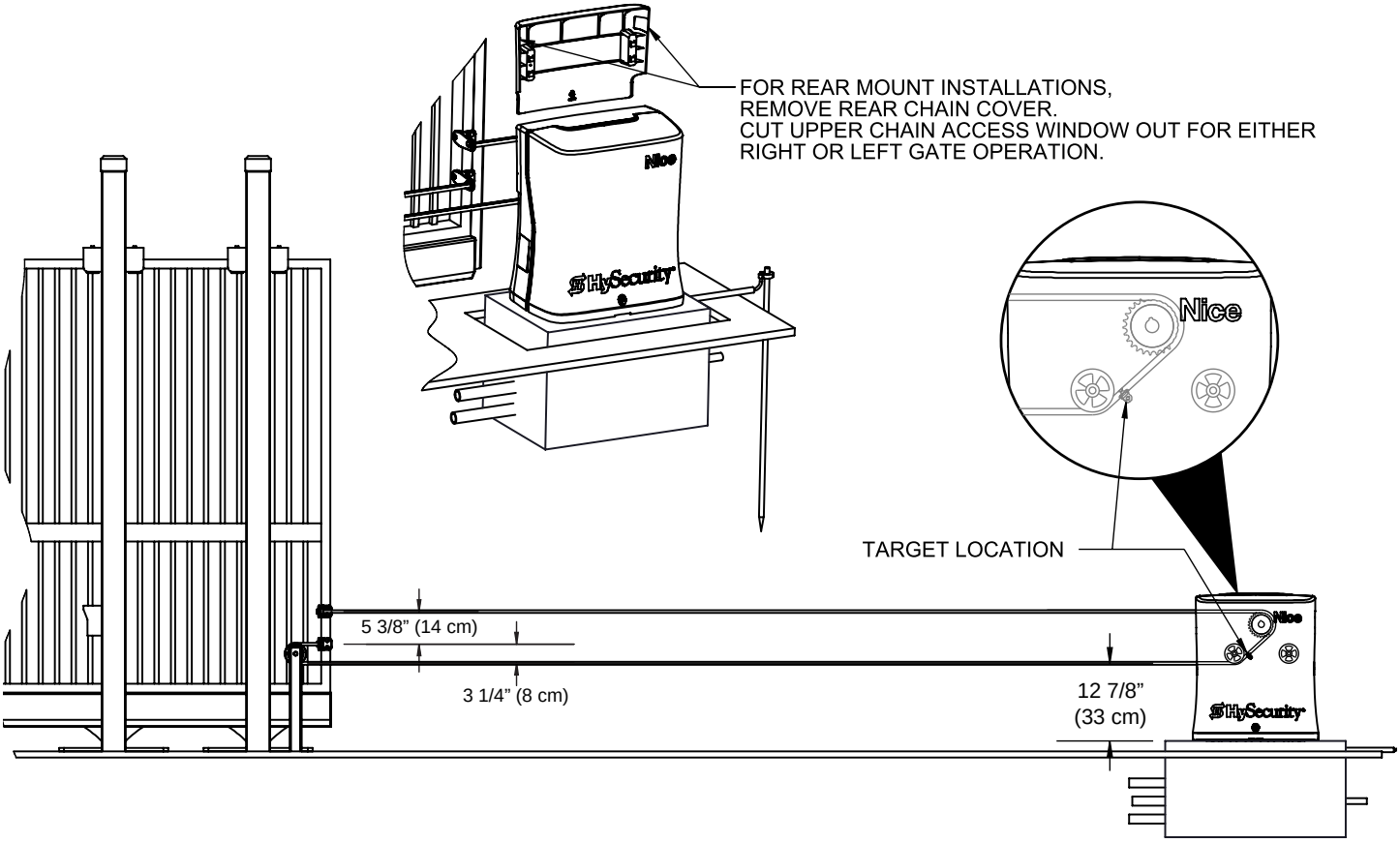

SlideSmart CNX: REAR MOUNTED INSTALLATION - CLOSED

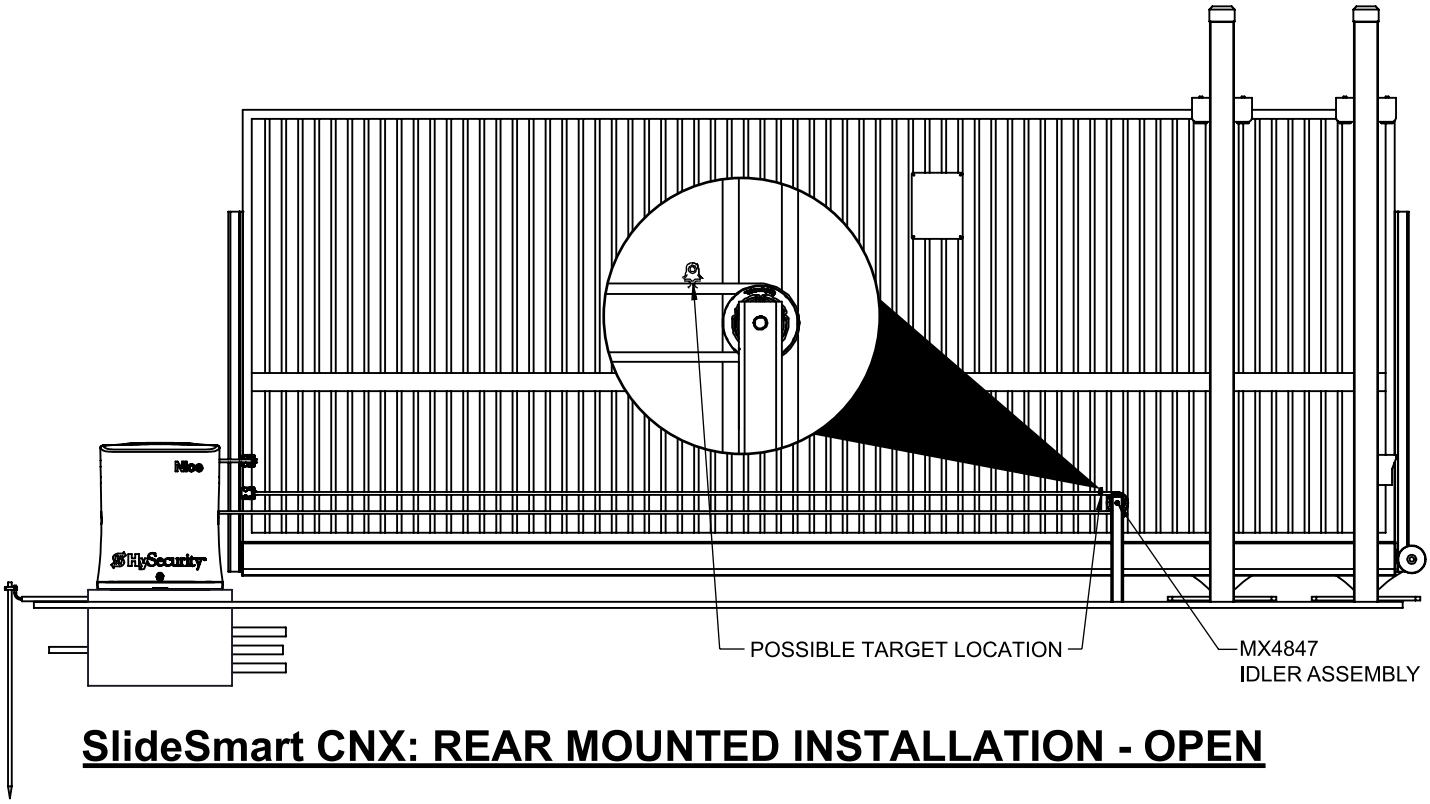

SlideSmart CNX: REAR MOUNTED INSTALLATION - OPEN

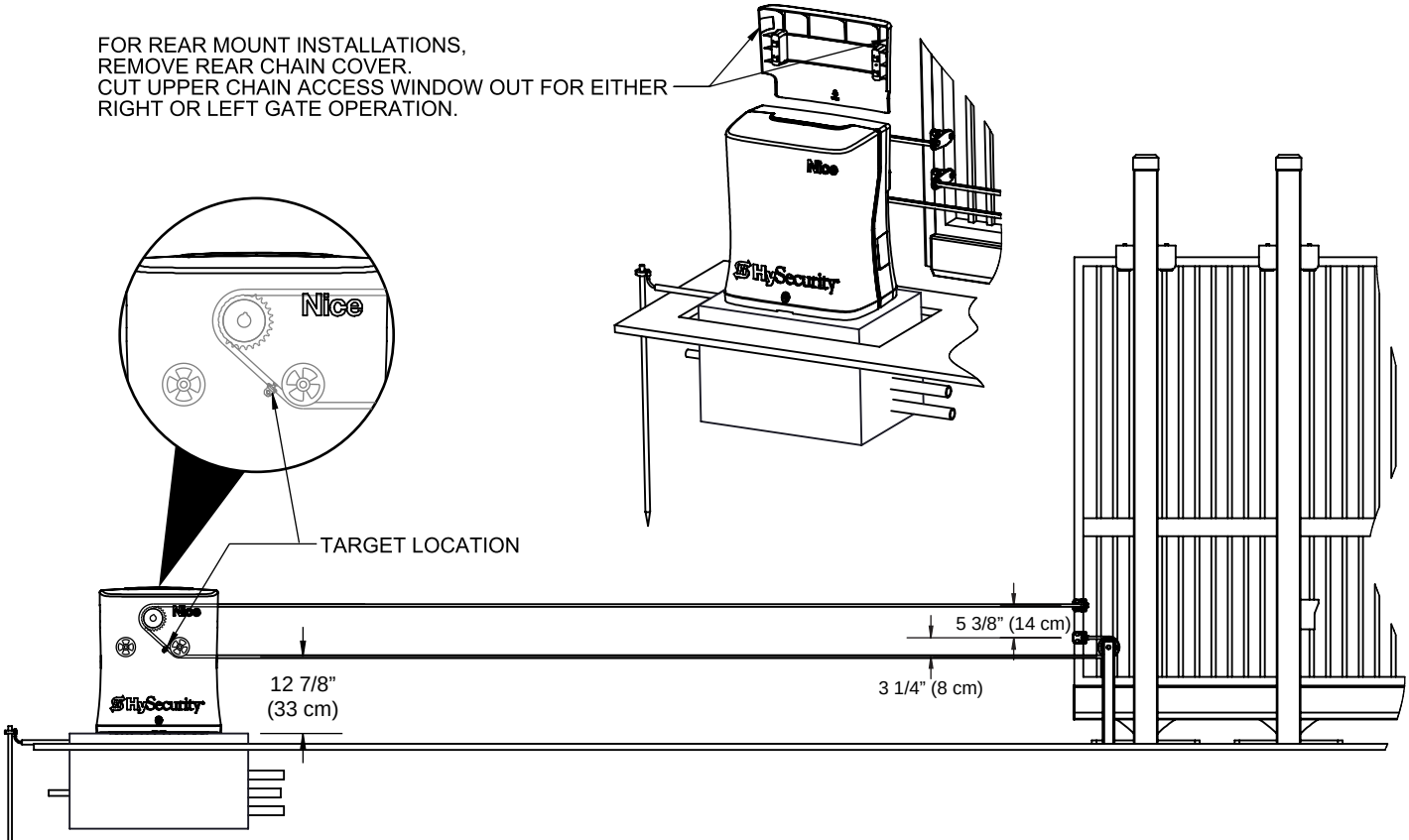

SlideSmart CNX: REAR MOUNTED INSTALLATION - CLOSED

The SlideSmart CNX requires one target magnet as a "home position" for the software's gate position monitoring. Two limit sensors are provided, but only one is used depending on operator handing.

1. Set the DC and AC switches to OFF.
2. Push the gate to the full CLOSED position.
3. Attach the target magnet to a fixed link between the sprocket and the idler furthest from the gate opening. Point the magnet towards the operator.

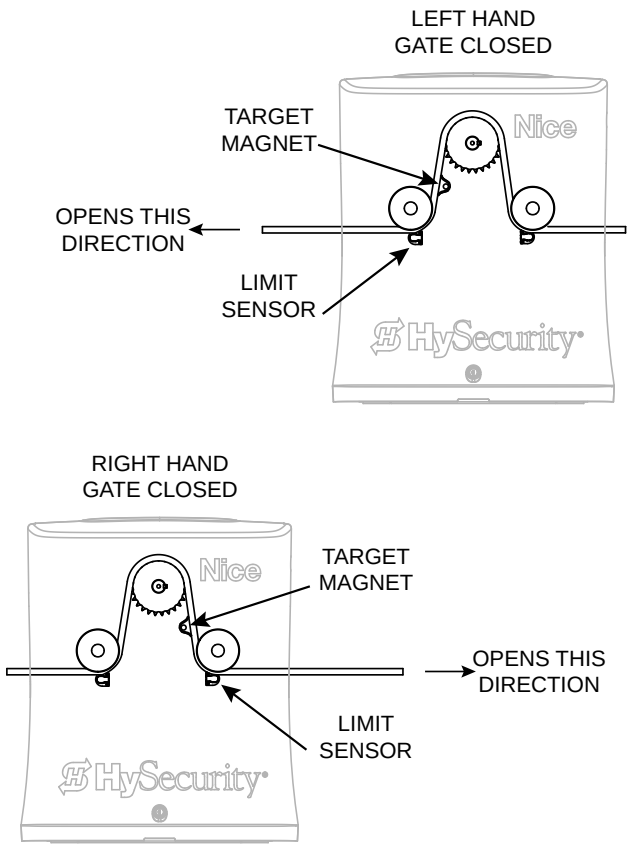

Figure 14. Limit Sensor and Target Magnet Position

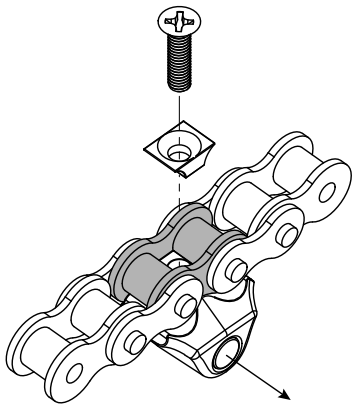

Figure 15. Target Magnet Toward Operator Attached to a Fixed Link

1. For rear installed gates, remove the appropriate tab from the chain cover.

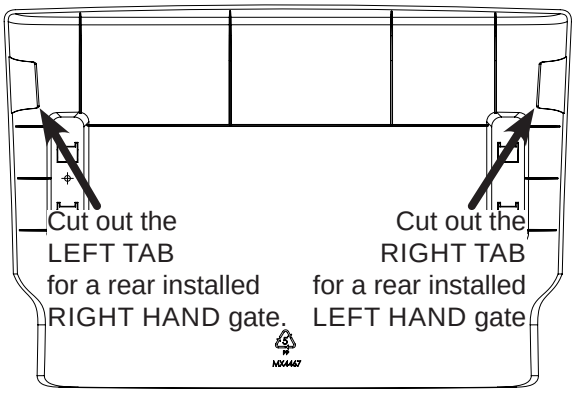

Figure 16. Rear Installation Chain Cutouts

2. Align the chain cover tabs to the rear cover slots and then push down to snap it in place.

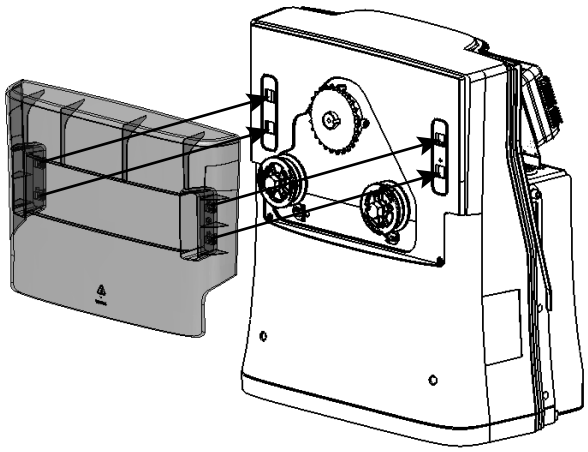

Figure 17. Attach Chain Cover

3. For additional safety, install the lock pin to prevent easy removal of the chain cover.

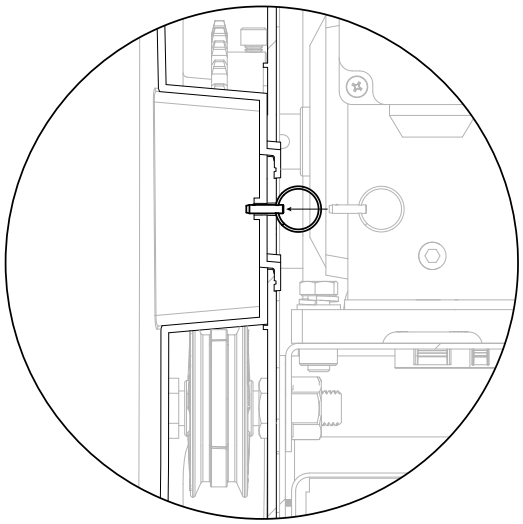

Figure 18. Install Spring Pin

WIRING 115VAC OR 208/230VAC POWER

- Verify AC power supply wires and low voltage accessory wires run through separate conduits. The higher voltage to the AC power supply may cause interference and anomalies in SlideSmart CNX operation if the high voltage wires are routed through the same conduit as the low voltage wires.
- Maximum gate operator current draw is 7.5 Amps on a dedicated 115VAC circuit (20A dedicated circuit is recommended).
- Maximum gate operator current draw is 4 Amps on a dedicated 208/230VAC circuit (20A dedicated circuit is recommended).
- Make sure proper wire gauge is used for the length of the wire run. The following tables show the maximum allowable wire run from the power source to the operator for various wire sizes.

Table 1. Wire Gauge versus Run

AC Power	14 gauge wire	12 gauge wire	10 gauge wire
One operator 115V	485 ft (147 m)	775 ft (236 m)	1235 ft (376 m)
Two operators 115V	242 ft (73 m)	387 ft (117 m)	617 ft (188 m)

Table 2. Wire Gauge versus Run

AC Power	14 gauge wire	12 gauge wire	10 gauge wire
One operator 208/230V	1375 ft (419 m)	2185 ft (665 m)	3475 ft (1059 m)
Two operators 208/230V	687 ft (209 m)	1092 ft (332 m)	1737 ft (529 m)

NOTICE

Table 1 and Table 2 assume a dedicated circuit with an accessory power load up to 2A. Additional loads require that the wire size be increased or the distance of the run be decreased.

Operators are factory set for incoming power of 115VAC. If 208/230VAC, change the voltage switch on the power supply to 230VAC with a flathead screwdriver (Figure 19 and Figure 20).

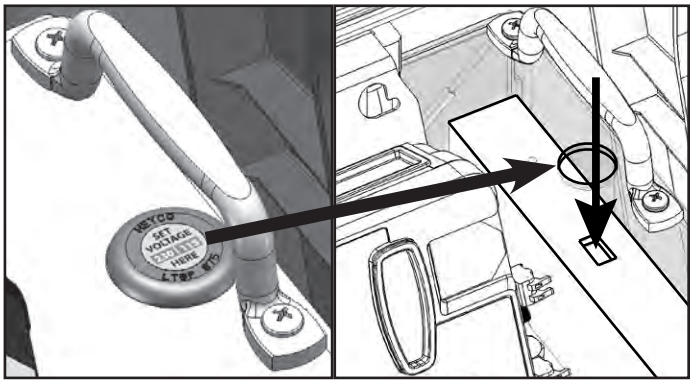

Figure 19. Voltage switch access

Figure 20. Voltage switch positions

Always connect electrical power and ground the operator in accordance with the NFPA 780 & NEC, Article 430 and Article 250. Research and adhere to other local codes that may apply.

DANGER

Turn off AC power at the source (circuit breaker panel) before accessing the wires in the CNX junction box. Follow facility Lock Out/Tag Out procedures.

1. Make sure both the DC and AC power switches are in the OFF position.
2. Connect the battery harness to the back right hand corner of the drive module. (Figure 21)
3. Remove the junction box cover. (Figure 22)
4. Connect the incoming power supply wires to the AC or DC (solar) terminal block inside the junction box. Match the wire colors. (Figure 23). Remember to set the power supply voltage switch to match 115VAC or 208/230VAC. (Figure 20)
5. Organize all the wire connections and put the cover onto the junction box.

Note: For 208V/230V or solar (24V) installations, place the label (included in the ship with kit) over the factory default 115V 1Ø label.

6. For solar installations, remove the power switch mounting plate and disconnect the red (+V) and blue (-V) wires from the power supply. Tape or wire nut the ends separately to prevent shorts (Figure 24).

Note: CNX operators require 24VDC rated solar panels with a maximum open circuit voltage of 48VDC.

7. Set both DC and AC power switches to ON (Figure 25).
8. Software version will appear on LCD display and then the Setup Menu.

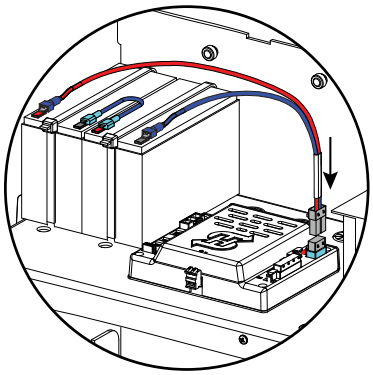

Figure 21. Battery harness to drive module

Figure 22. Junction box cover

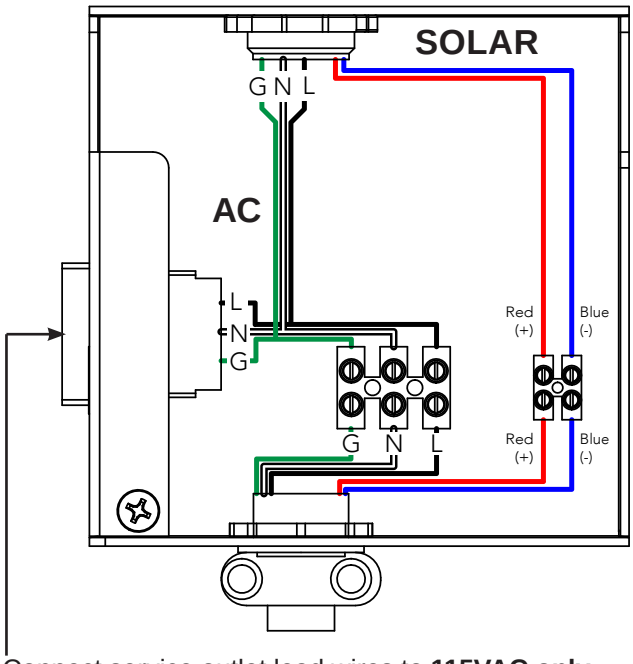

Connect service outlet lead wires to **115VAC only.**

Figure 23. 115VAC/230VAC and Solar DC Terminals

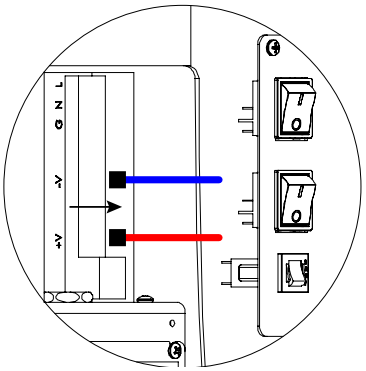

Figure 24. Disconnect DC Power Supply Wires

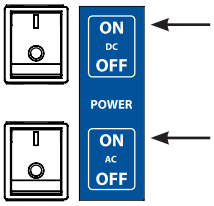

Figure 25. Set both power switches to ON

LOW VOLTAGE CONTROL WIRING: WIRE GAUGE AND DISTANCE

The SmartCNX Controller has very sensitive control inputs. The following is a chart of maximum distances for wire size:

Wire Size	Maximum Distance
18 ga	7.0 miles (11 km)
20 ga	3.5 miles (5.6 km)
22 ga	2.7 miles (4.3 km)
24 ga	2.0 miles (3.2 km)
26 ga	1.0 mile (1.6 km)
28 ga	3700 feet (1.1 km)

Other control wiring distances:

BlueBUS 18 ga	164 feet (50 m)
Dual Gate and Seq Gate 18 ga	0.75 miles (1.2 km)

USING A SOLAR POWERED OPERATOR

You can directly connect a 24V solar panel (or two 12V panels in series) to the SmartCNX operators because of the built-in charger.

Solar panels are not included in the purchase of the SlideSmart CNX operators.

To plan a solar-powered site, read through this entire section.

HySecurity offers an online Solar Calculator at www.hysecurity.com/Solar that can be used to determine the solar power requirements for your specific gate installation configuration.

GLOSSARY OF SOLAR POWERED OPERATOR TERMS

Battery life, aging: refers to the number of charge and discharge cycles before the batteries need to be replaced.

Capacity: refers to how long the batteries can power the operator before a recharge.

Gate Specs: refers to the gate weight, length, and open/close speed. Used to roughly determine the energy required to cycle the gate.

DESIGN REQUIREMENTS & CONSIDERATIONS

SmartCNX operators come with two 8Ah batteries which nominally support up to 1,500 feet of gate travel per day, based on the following:

- 60W (minimum) solar panel system.
- A gate with the following specs: 1000 lbs (454kg), 30 ft (9 m) long, and 1 ft/s (30.5 cm/s) speed.
- Connection to two Hy5B vehicle loop detectors and one multi-code radio receiver.

The following design factors significantly affect the cycle capacity of a solar-powered gate operator and the life of the batteries:

- Power needs: Several factors affect the amount of solar power to automate a gate. Some of the most important include:
  - Usage: The number of cycles per day.
  - Gate size: More important for slide gates than swing.
  - Idle power draw: All systems draw power even when the gate is not moving. Include idle current draw from your operator and accessories. Choose low power accessories when able. Some wireless accessories are battery powered and put no load on the solar system.
- Available solar power
  - Plan your system to operate in December, when days are shortest and often cloudy. A solar hours map like the one below depict the power available in kWh/day on a 1m by 1m solar panel in December.
  - Size your panels to provide a little more than daily power used during the worst month of the year.
- Power storage
  - The batteries need to power the system for extended times of cloudiness when there will be no solar charging. Take the daily power needed and multiply by the desired backup power duration. Size the batteries to have about twice the needed power. This prevents deep cycling the batteries, which reduces their life. For 24V systems always use two batteries of the same size wired in series.
- Other considerations
  - Select low power accessories when possible.
  - Locate solar panels for full sunlight. Avoid shade and other obstructions
  - Assume greater power usage during calculations.
  - For additional resources including an online calculator, more detailed planning sheets, and other resources go to:
    HySecurity.com/solar
    solarelectricityhandbook.com
    solarinsolation.org
  - Gate cycle frequency. As the peripherals draw power from the batteries the cycle capacity goes down. An operator that cycles constantly is most likely to achieve maximum cycles from battery power.
  - Extreme temperatures reduce battery capacity and accelerate aging. Keep the batteries away from temperatures above 90°F (32C).
  - Good gate hardware and smooth, unobstructed gate travel lower the operator's power draw and serve to extend battery life.

CONNECTING THE SLIDESMART CNX TO A SOLAR PANEL SYSTEM

1. Install one 24VDC solar panel or two 12VDC solar panels in series with a total capacity of at least 60W (Figure 26). Mount them according to the manufacturer's installation instructions within 100 ft of the operator. Check NEC and local regulations for other distances that may apply.
2. Set both DC and AC switches on the operator to OFF.
3. Remove the power switch mounting plate and disconnect the DC wires from the power supply. Tape or wire nut the ends separately to prevent shorts (Figure 24).
4. Connect any earth ground wires from the solar panels to the operator chassis ground (Figure 6).

NOTICE

There is a risk of damage to electrical components if working on them while the solar panels are energized. Disconnect or disable the solar panels while working with the electrical components.

5. Connect the solar panel wires to the solar terminal block with matching polarity. Use 14 gauge wire or larger (Figure 23).
6. Set DC and AC switches on the operator to ON. Continue to initial set up on page 36.

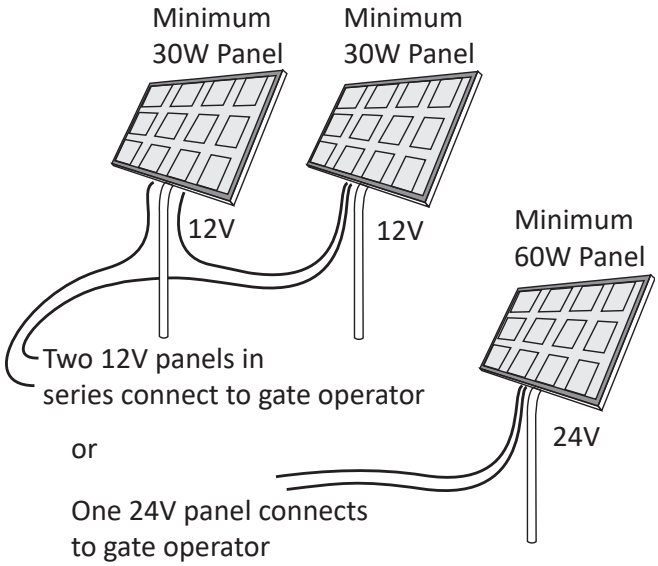

Figure 26. Minimum Solar Panel Configuration

CONNECTING PERIPHERALS TO SOLAR OPERATORS

To connect any peripheral devices to a solar operator, use the 24VDC terminals. Because a solar operator gets its energy from the sun and stores the energy produced by the solar panels in batteries that are constantly discharging, it is important to use peripheral devices that draw and consume as little power as possible.

HySecurity recommends the Hy5B vehicle detector for solar powered sites that require vehicle detectors. The Hy5B draws a minimal 0.005A per detector. Box detectors usually draw much more current.

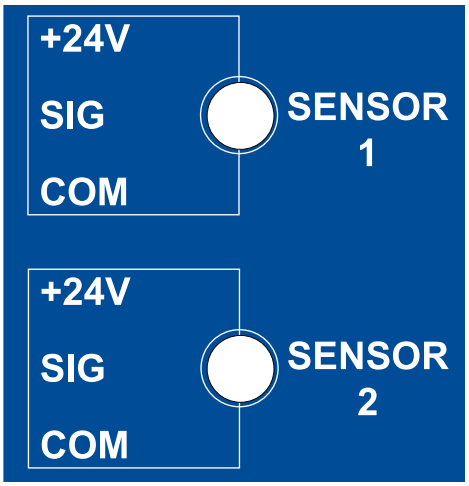

Figure 27. Solar Peripheral Connections

UNDERSTANDING GATE ACTIVITY BASED ON SOLAR ZONES

Use the solar maps to determine the number of solar hours per day that can be reasonably expected in a particular zone. The number of solar hours per day affects the amount of gate travel for a free-moving gate powered by the SlideSmart CNX solar operator. See Figure 28.

NOTICE

Remember, the sun is the only source of energy. If you need to increase the amount of gate travel per day (i.e. feet of gate travel), additional solar panels may be required. The greater the battery capacity, the longer the operator can cycle the gate on cloudy days without the recharge provided by the solar panels. Sites requiring more feet of gate travel per day or those sites located in less sunny locations, need larger capacity batteries and larger solar panels. HySecurity offers a 35Ah battery option which provides 4 times the storage capacity of the standard 8Ah batteries.

Map Legend

Solar hrs/day	Feet of gate travel/day using 35Ah batteries
5.0	3,000 (60W panel)
4.5	2,250 (60W panel)
4.0	1,600 (60W panel)
3.5	850 (60W panel)
3.0	200 (60W panel)

Four Week Average, December 7 - January 4

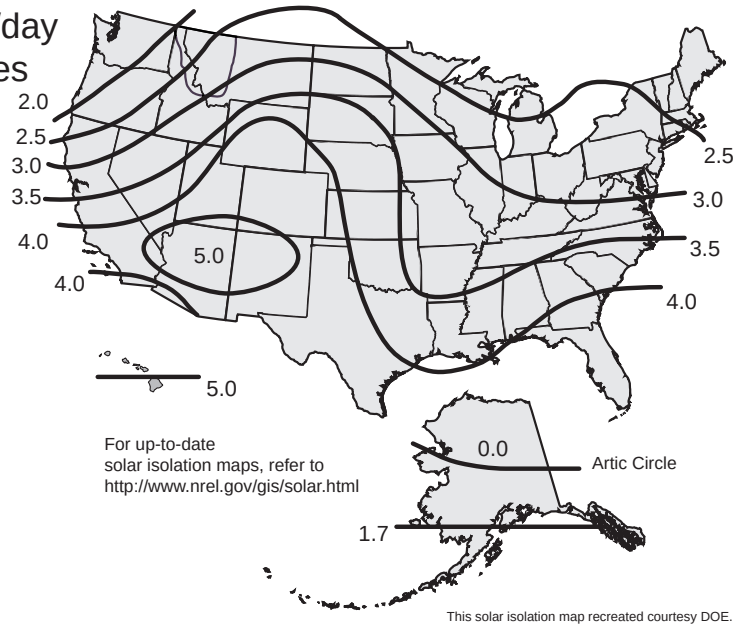

The chart is based on a 60 Watt (24VDC) solar panel system with SlideSmart powering a 30 foot (9m), 1000 lbs, 1ft/s gate with the following peripherals attached:

- One low current multi-code radio receiver (50mA)
- Two HY-5B vehicle detectors (100mA)
- Two monitored photo eyes

The number of amps that the peripherals draw coupled with the gate travel occurring throughout the night determines the battery capacity required. Overcast weather increases required battery capacity.

The number of amps that the peripherals draw coupled with the gate travel during the day, determines the solar panel size needed.

NOTE: HySecurity provides a 35Ah battery option for sites where high gate travel and inclement weather are an issue. For sites of this nature, consider at least a 120W system. A 120W system doubles the feet of gate travel/day that is shown in the chart above.

Figure 28. Solar Legend Map

IMPORTANT CONSIDERATIONS FOR BATTERY POWERED OPERATORS

- Since the operator is intended to run on batteries, control of the load is important. Gates that move easily and do not bind will drain less energy from the battery, preserving capacity for more cycles during a power failure.
- Be certain to observe polarity when connecting the batteries or adding accessories. Reversed polarity may result in a non-functional operator or damage to a component. Red (+) is positive and black (-) is negative.
- If shorted, the batteries will generate a very high current.
- The batteries are connected in series. Connect the red harness wire to the red terminal on left battery. Connect the black harness wire to the black terminal on the right battery. Connect the blue jumper wire between the batteries.
- Batteries have a finite life and age more quickly when exposed to temperatures above 80°F (27°C). Battery temperatures above 104°F (40°C) are damaging and significantly shorten battery life.

Table 3. Battery Lifespan and Average Operating Temperature

Average Temperature	Battery Lifespan
80°F (27°C)	100%
90°F (32°C)	50%
104°F (40°C)	25%

- As the batteries age, they will progressively lose their capacity to store energy. If the total amount of back up capacity is critical, plan to replace the batteries after two years of use especially in hot climates. Properly discard used batteries. Refer to Hazardous Materials and Proper Disposal.

WARNING

Batteries contain sulfuric acid. Acid in your eyes, on your skin, or on your clothing can cause injury and severe burns. If batteries are dropped or damaged dispose of them properly.

- Batteries are rated to perform to capacity at certain temperatures. Variations in temperature affect performance of the batteries. An example of amp hour performance is shown in Table 4.

Table 4. Battery Capacity and Temperature During Operation

Temperature	Capacity
77°F (25°C)	100%
32°F (0°C)	80%
-22°F (-27°C)	50%

- HySecurity uses a sealed AGM-type battery which last much longer than wet cell batteries and needs no maintenance over its life span. The charger circuit regulates to allow high charger output when the battery is partially discharged. The charger circuit automatically reduces the output to near zero as the batteries become fully charged. The charger circuit compensates for temperature fluctuations to optimize battery performance.

NOTICE

The SlideSmart CNX operator stores all menu settings in non-volatile memory. Configurations are saved if a power loss occurs, and reinstated once power is restored.

INSTALL THE EXTENDED BATTERY KIT

1. Remove the front cover.
2. Set the DC and AC switches to OFF.
3. Remove the wiring access panel.
4. Remove the zip ties and wire harness from the 8Ah batteries.
5. Remove the 8Ah batteries.
6. Install the extended battery tray at the back of the conduit cut out. (Figure 29)
7. Place the 35Ah batteries on the tray. (Figure 30)
8. Connect the adjacent red (+) and black (-) terminals with the blue wire in the 35Ah wire harness.
9. Connect the red and black wires in the 35Ah wire harness to the matching battery terminals (red – red and black – black).
10. Connect the 35Ah wire harness to the 8Ah wire harness (red – red and black – blue). Figure 31
11. Install the access panel.
12. Set the DC and AC switches to ON.
13. Set the BATTERY TYPE to 1 (EXTENDED) in the menus. MENU > OPERATOR CONFIGURATIONS > BATTERY TYPE > 1 (EXTENDED) > SELECT > exit menus.
14. Install the front cover.

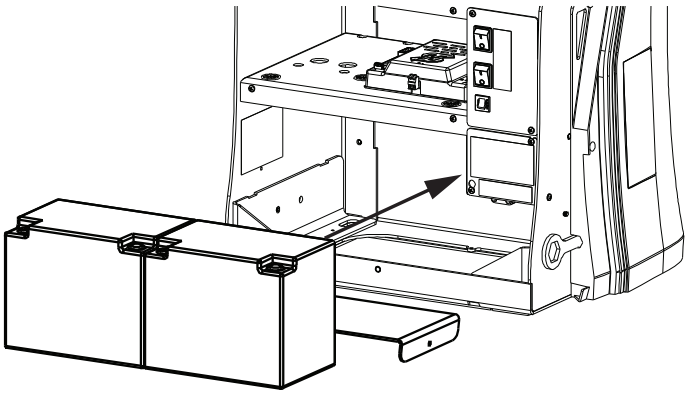

Figure 29. Extended Battery Kit

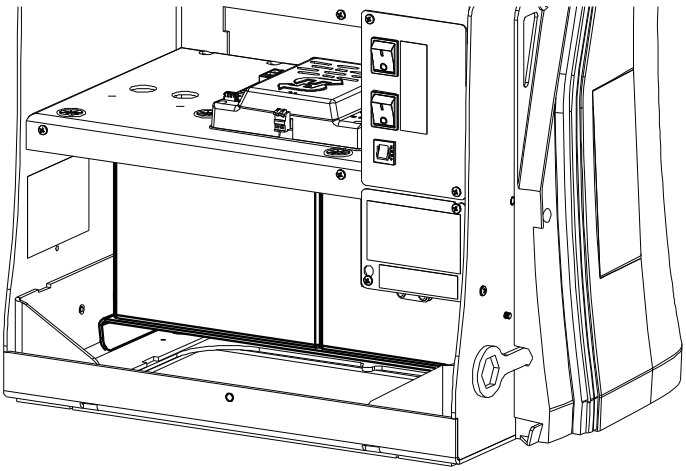

Figure 30. Installed Extended Batteries

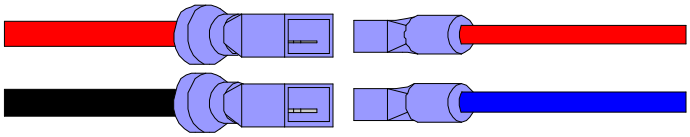

Figure 31. 35Ah Wire Harness to 8Ah Wire Harness

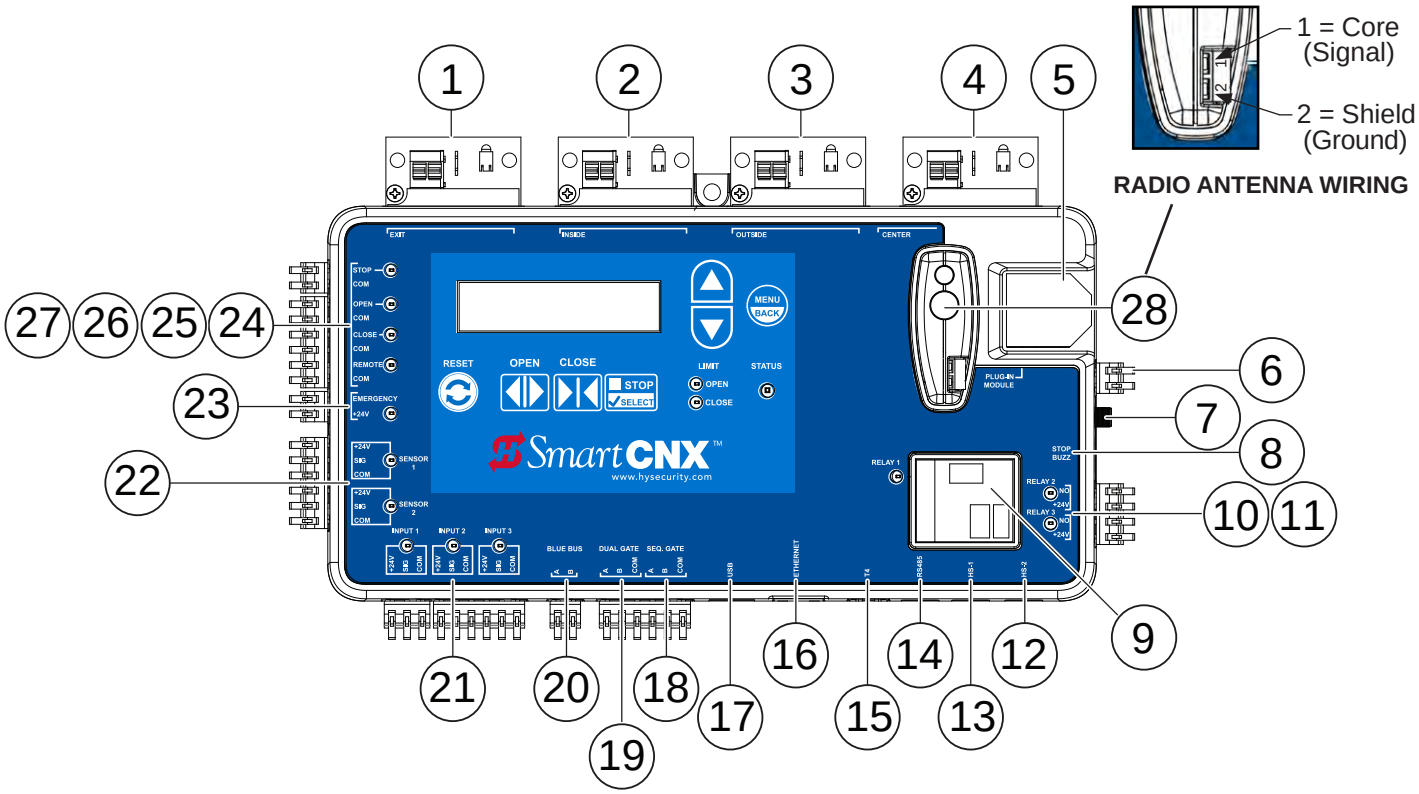

Figure 34. SmartCNX Controller Connections

1. **Hy5B EXIT Loop –** This opens a fully closed gate or reopens a closing gate.
2. **Hy5B INSIDE Loop –** Reversing loop on secure side.
3. **Hy5B OUTSIDE Loop –** Reversing loop on public side.
4. **Hy5B CENTER Loop –** Detect vehicle in swing arc of the gate
5. **(Not Used)**
6. **OXI Antenna**
7. **(Not Used)**
8. **Stop/Buzzer Harness**
9. **Relay 1 –** Mechanical relay
10. **Relay 2 –** Solid state relay
11. **Relay 3 –** Solid state relay
12. **HS-2 –** Can connect to expansion module.
13. **HS-1 –** Harness connects communication to drive module.
14. **RS485**
15. **T4 Port**
16. **Ethernet** – See Network Setup Menu in the External Communications Menu on page 76.
17. **USB –** Used for software updates & fault log download.
18. **Sequenced Gate Connection**
19. **Dual Gate Connection**
20. **BlueBUS –** For use with NICE BlueBUS devices
21. **Programmable Inputs 1-3**
22. **Programmable Sensor Inputs 1-2 –** UL 325 required external entrapment sensors
23. **Emergency –** Programmable to fire department open or emergency close
24. **Remote –** Programmable for three functions, defaults to step function
25. **Close –** Close only input
26. **Open –** Open only input
27. **Stop –** Stop and reset input
28. **OXI –** Radio for NICE access control devices.

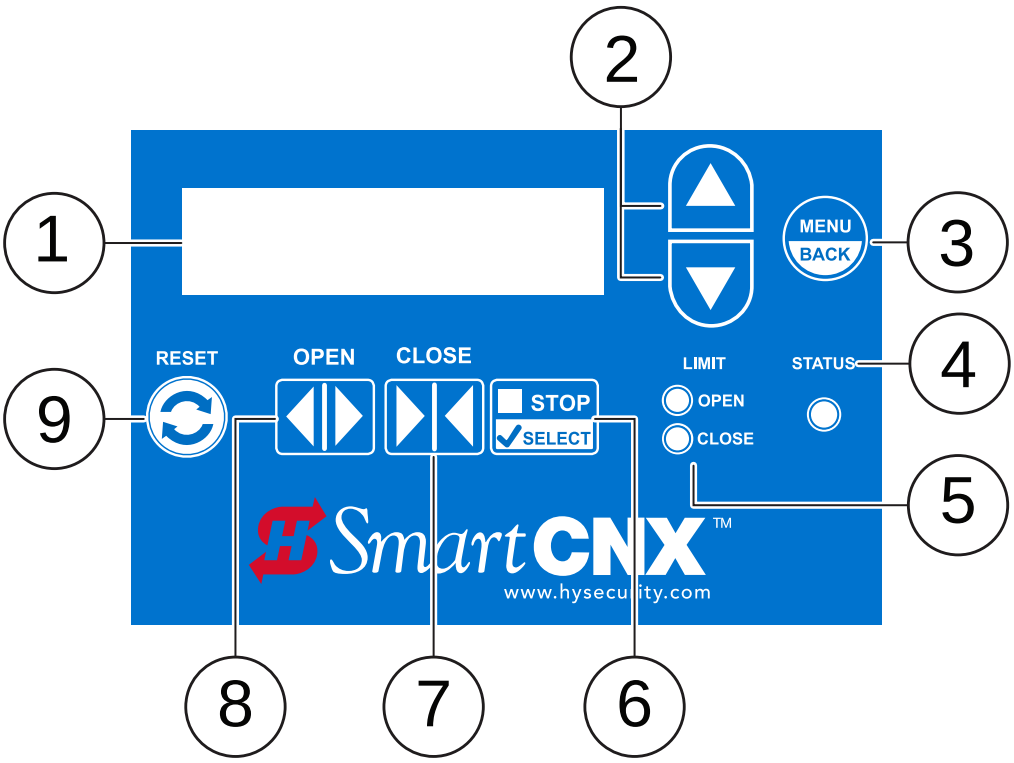

Figure 35. SmartCNX Controller User Interface

1. **OLED Display –** 16 characters per line, 2 line display. Displays current operator status, menus, and alerts/faults/errors.
2. **Up/Down Arrows –** Navigate through menu and display options while in Menu Mode.
3. **Menu/Back –** Open the configuration menu from the operator status display. Go back from the current menu (exit the current menu).
4. **Status LED –** Indicates gate operator status
   a. Flashing Red – An Alert, Fault, or Error has occurred. Immediately shut down the machine and correct the fault.
   b. Solid Red – Operator is in Menu Mode
   c. Flashing Green – Operator is in Run Mode
   d. Flashing Blue – Operator is pairing with a Bluetooth device.
   e. Alternating Blue and Red/Green – Operator is communicating with a Bluetooth device.
5. **Limit Open/Close –** Solid green when target magnet activates limit sensor.
6. **Stop/Select –** Stops gate travel when in run mode. Press to select current menu option or to confirm setting value
7. **Close –** Closes the gate while in Run Mode.
8. **Open –** Opens the gate while in Run Mode.
9. **Reset –** Press to clear faults and return to Run Mode. Cannot be used in Menu Mode.

Note: You can configure the menus on battery power when an external power source is not yet present.

CONFIGURE THE SETUP MENU (SLIDE)

The first time the SmartCNX controller powers on set USAGE CLASS, GATE HANDING, and LEARN LIMITS before normal operation.

1. Set the DC and AC switches to ON the first time. Software version appears on the display and then USAGE CLASS - 0.
2. Press SELECT twice, press the UP or DOWN arrow to select the right month (MM), press SELECT, and press the DOWN arrow to move the indicator to day (DD). Repeat the process to set the day and move to the next part until you are done setting the date and time.
3. Press SELECT, press the UP or DOWN arrow to navigate to the correct USAGE CLASS (page 5), and press SELECT to accept value.
4. Press the UP or DOWN arrow until GATE HANDING appears on the display, press SELECT, press the UP or DOWN arrow to navigate to the correct option, and press SELECT to accept value.
5. SCAN FOR DEVICES appears on the display after the controller resets. Press SELECT and press the UP or DOWN arrow to change the setting to 1 (ON). When the scan is complete the display will show BlueBUS photo eye configuration information.
6. STARTING UP flashes on the display, then LEARN LIMITS appears.
7. Hold the OPEN button until the gate slides to full open. Release the OPEN button.

Note: Press CLOSE to reverse direction.

Note: Do not set limits at the physical OPEN and CLOSE stop. Leave a 1 to 2 inch (2.5 - 5 cm) gap to allow slack in the chain to prevent wear and avoid stress on gate hardware.

8. Press SELECT twice to store the full open location in memory.
9. Hold the CLOSE button until the gate slides to full close. Release the CLOSE button.

Note: Press OPEN to reverse direction.

10. Press SELECT twice to store the full close location in memory.
11. GATE CLOSED appears on the display. ALERT 15 flashes until the limit sensor detects the target magnet on the next open cycle.

Note: NO AC POWER flashes if the AC power is not connected or the AC power switch is set to OFF.

12. Press OPEN and then CLOSE to cycle the gate. An audible beep and both OPEN and CLOSE limit LEDs flash when the target is first recognized on the close cycle.

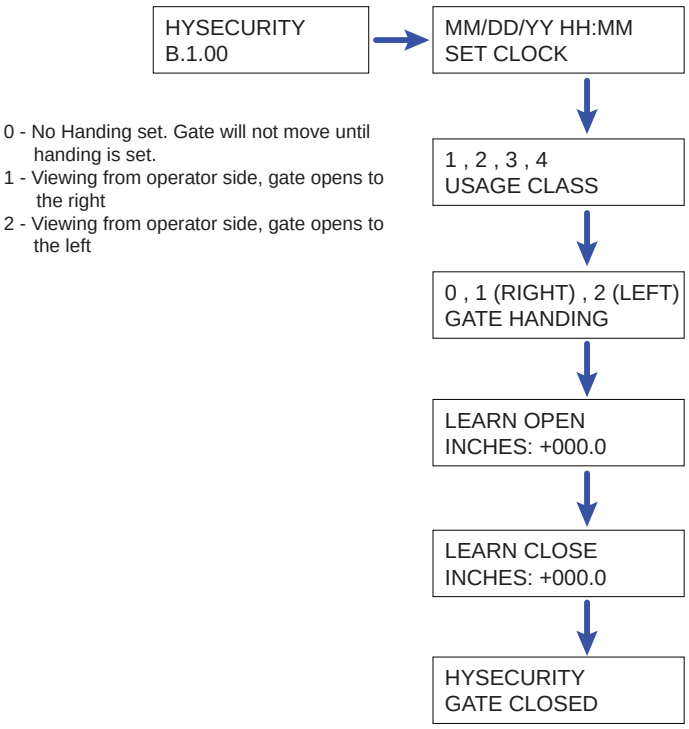

Figure 36. Configuring Setup Menu

NAVIGATE THE MENUS

Press MENU/BACK to enter the menus or to exit the current screen (up one level without saving any changes).

Press the UP or DOWN arrow to change the current selection until you find the one you want.

Press SELECT to access the menu or sub-menu. Press SELECT to accept the current option or value.

Note: These navigation instructions are the same throughout the SmartCNX controller menus.

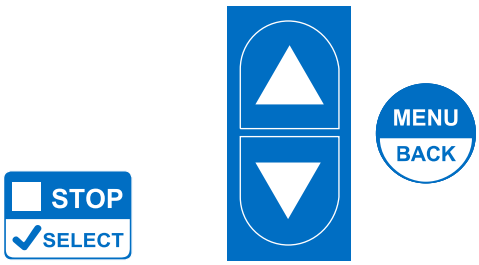

These are the top level menus in the SmartCNX controller. The following pages show the submenus with settings and descriptions.

OPERATOR CONFIGURATIONS

OPERATOR FUNCTIONS

OPERATOR COMMUNICATIONS

PROGRAMMABLE INPUTS

ENTRAPMENT SENSOR RESPONSE

USER RELAY OUTPUTS

LOOP OPTIONS

EXTERNAL COMMUNICATIONS

EXPANSION BOARD INPUTS

DIAGNOSTICS MENU

24/7 CLOCK AND TIMER

OPERATOR CONFIGURATIONS

- USAGE CLASS
  - 0 (GATE DISABLED)†
  - 1 (RESIDENTIAL)
  - 2 (PUBLIC)
  - 3 (INDUSTRIAL)
  - 4 (HIGH-SECURITY)
- CLOSE TIMER
  - 0 (OFF)†
  - 1 - 99 (SECONDS)
- GATE HANDING
  - 0 (NOT ASSIGNED)†
  - 1 (RIGHT)
  - 2 (LEFT)
- AC LOSS
  - 0 (UPS FAIL OPEN)†
  - 1 (UPS FAIL CLOSE)
  - 2 (AUTO OPEN)
  - 3 (NO CLOSE TIMER)
- BATTERY TYPE
  - 0 (STANDARD)†
  - 1 (EXTENDED)
- OPEN TIME ALERT
  - 0 (0 SECS)
  - 1 (15 SECS)
  - 2 (45 SECS)†
  - 3 (75 SECS)
  - 4 (105 SECS)
  - 5 (135 SECS)
- LOITERING ALERT
  - 0 (0 SECS)
  - 1 (15 SECS)
  - 2 (45 SECS)
  - 3 (75 SECS)†
  - 4 (105 SECS)
  - 5 (135 SECS)

SLIDE-only

- LEARN LIMIT
  - 0 (OFF)†
  - 1 (ON)
- FACTORY DEFAULTS
  - 0 (CUSTOM)†
  - 1 (RESET TO)
- OPERATOR TYPE 15†
  - 1-17 (OPERATOR TYPE)
- MENU PIN
  - 0 0 0 0

† = Indicates default

Table 5. SmartCNX Operator Configurations Settings		
MENU DISPLAY	**SETTINGS**	**DESCRIPTION**
USAGE CLASS	**0 = Gate disabled** 1 = Residential 1 to 4 units 2 = Comm./public access 3 = Light industrial 4 = Industrial secure	Assign the operator's Usage Class designation per UL 325 standards. The installer must designate a usage class before the operator will function.
CLOSE TIMER	**0 = Off** 1-99 (seconds)	Number of seconds before open gate initiates closure after all inputs are clear.
GATE HANDING	**0 = NOT ASSIGNED** 1 = RIGHT 2 = LEFT	Designates which way a gate opens viewed from operator. If it opens to the left, it is a left-hand gate.
AC LOSS	**0 = UPS FAIL OPEN** 1 = UPS FAIL CLOSE 2 = AUTO OPEN 3 = NO CLOSE TIMER	Action operator performs during an AC power loss.
BATTERY TYPE	**0 = STANDARD** 1 = EXTENDED	Configures operator's battery type. Standard is for 8Ah batteries and Extended is for 35Ah batteries.
OPEN TIME ALERT	0 = 0 (seconds) 1 = 15 **2 = 45** 3 = 75 4 = 105 5 = 135	Activates relay (function 8) when gate is open longer than selected time period.
LOITERING ALERT	0 = 0 (seconds) 1 = 15 2 = 45 **3 = 75** 4 = 105 5 = 135	Activates relay (function 13) when vehicle is over Outside Obstruction Loop with gate closed longer than selected time period.
LEARN LIMIT	**0 = OFF** 1 = ON	(SLIDE ONLY) Set to 1 to place operator in learn limits mode. Installer must then set open and close limits.
FACTORY DEFAULTS	**0 = CUSTOM** 1 = RESET TO	Set to 1 to erase all installer entered settings and return to factory defaults.
OPERATOR TYPE	**15 = SLIDESMART CNX**	Factory set. Used only if replacing the SmartCNX Controller.
MENU PIN	**0 0 0 0** ^	Allows installer to set a 4-digit security pin to restrict access to CNX controller menus.

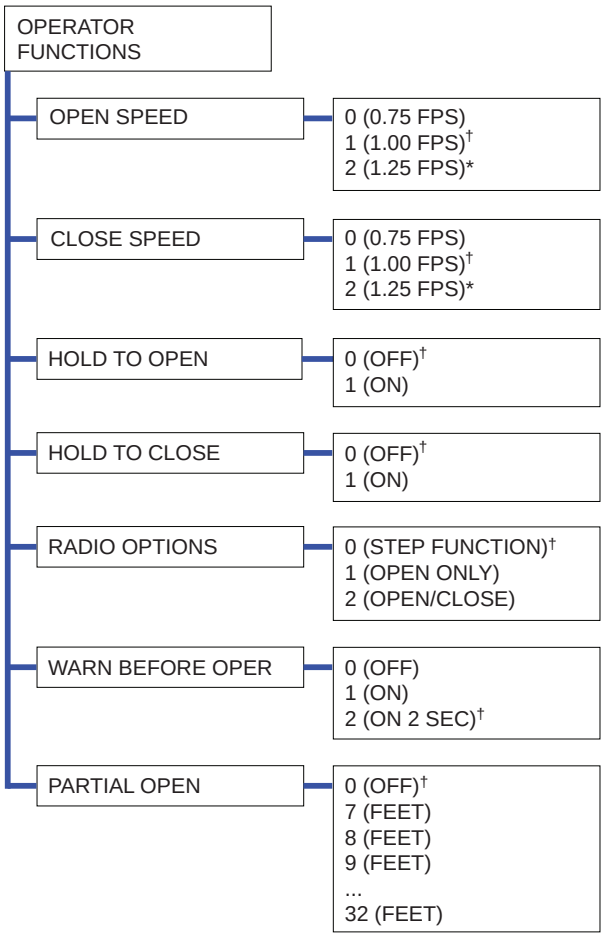

*(USAGE CLASS 3, 4 ONLY)

† = Indicates default

Table 6. SmartCNX Operator Functions Settings		
MENU DISPLAY	**SETTINGS**	**DESCRIPTION**
OPEN SPEED	0 = 0.75 FPS **1 = 1.00 FPS** 2 = 1.25 FPS	Designates how quickly gate moves in the open direction. Setting 2 (1.25 FPS) only appears when operator is set to UC 3 or 4.
CLOSE SPEED	0 = 0.75 FPS **1 = 1.00 FPS** 2 = 1.25 FPS	Designates how quickly gate moves in the close direction. Setting 2 (1.25 FPS) only appears when operator is set to UC 3 or 4.
HOLD TO OPEN	**0 = OFF** 1 = ON	Set to 0 to produce a gate open when a momentary signal is transmitted. Set to 1 if a constant hold to open signal, such as a push button control, is being used. 0 = Momentary open signal 1 = Constant hold open push button required. You must set HOLD TO OPEN to 1 to comply with UL 325 Type D protection.
HOLD TO CLOSE	**0 = OFF** 1 = ON	Set to 0 to produce a gate closure when a momentary signal is transmitted. Set to 1 if a constant hold to close signal, such as a push button control, is being used. A setting of 1 also deactivates the automatic close timer and causes its menu to disappear. 0 = Momentary open signal. 1 = Constant hold open push button required. You must set HOLD TO CLOSE to 1 to comply with UL 325 Type D protection.
RADIO OPTIONS	**0 = STEP FUNCTION** 1 = OPEN ONLY 2 = OPEN/CLOSE	Default setting is to function as a STEP function where each consecutive activation reverses or stops the gate. First activation opens the gate. Configures radio input for open only (1). If changed to setting 2 then adds capability for radio input to close gate, but only when gate is fully open.
WARN BEFORE OPER	0 = OFF 1 = ON **2 = ON 2 SEC**	Controls warn-before-operate buzzer and can be configured three ways: Set to 0: Buzzer is disabled Set at 0, buzzer will still beep when alerts, faults, errors, or entrapment are detected. Set to 1: Buzzer beeps for 3 seconds before gate motion begins and continues through entire gate travel. Set to 2: buzzer beeps for 3 seconds before gate motion begins and continues for 2 seconds of gate travel. **WARNING** Do NOT cut wires to buzzer or unplug it as operator will not be in compliance with UL 325. Failure to comply may result in serious injury or death.
PARTIAL OPEN	**0 (OFF)** 7 (FEET) 8 (FEET) 9 (FEET) ... 32 (FEET)	Sets distance (from closed gate position) where gate stops if the partial open input is activated. When a number is entered in PO display, open partial input becomes operational. Only available on slide gate operators.

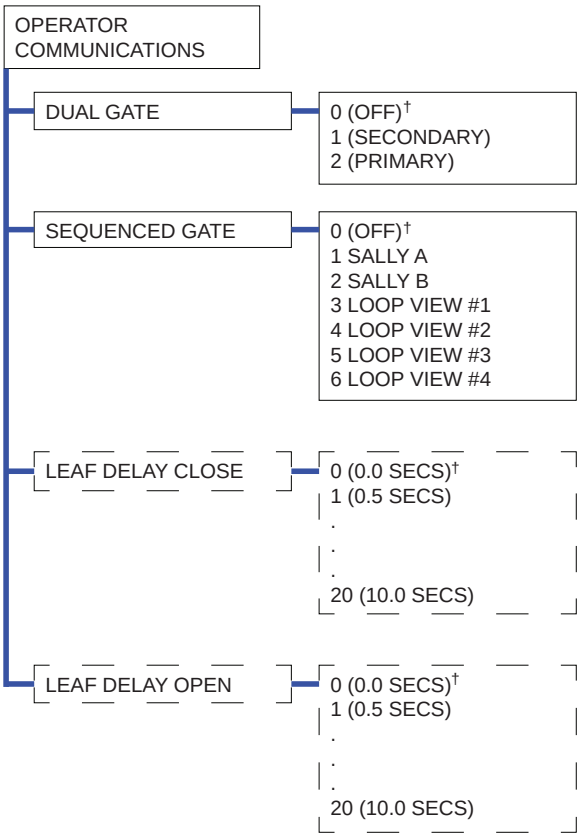

LEAF DELAY OPEN/CLOSE ONLY APPEAR IF THE GATE OPERATOR IS SET UP AS PRIMARY OR SECONDARY.

† = Indicates default

Table 7. SmartCNX Operator Communications Settings		
MENU DISPLAY	**SETTINGS**	**DESCRIPTION**
DUAL GATE	**0 = OFF** 1 = SECONDARY 2 = PRIMARY	Configures gate operator as a Primary or as a Secondary in a dual-gate installation. When you assign one unit as Primary, you must configure the other as Secondary.
SEQUENCED GATE	**0 = OFF** 1 = SALLY A 2 = SALLY B 3 = LOOP VIEW #1 4 = LOOP VIEW #2 5 = LOOP VIEW #3 6 = LOOP VIEW #4	This menu is used to configure a Sally Port or Sequenced gate system. For a Sally Port, set one operator to Sally A and the other to Sally B. For sequenced gates, set both operators to the same Loop View setting. Establishes communication after wiring two or more gate operators as sequential gates. **NOTE:** After selecting SEQUENCED GATE settings, set the CLOSE TIMER in each gate operator.
LEAF DELAY CLOSE	**0 = 0.0 (seconds)** 1 = 0.5 2 = 1.0 ... 20 = 10	Only appears if the gate operator is set up as PRIMARY or SECONDARY. Available settings are 1 through 20. Each increment adds 0.5 second time delay following a command to close before the operator activates. Provides up to a 10 second time before the gate starts closing.
LEAF DELAY OPEN	**0 = 0.0 (seconds)** 1 = 0.5 2 = 1.0 ... 20 = 10	Only appears if the gate operator is set up as PRIMARY or SECONDARY. Available settings are 1 through 20. Each increment adds 0.5 second time delay following a command to close before the operator activates. Provides up to a 10 second time delay before the gate starts opening.

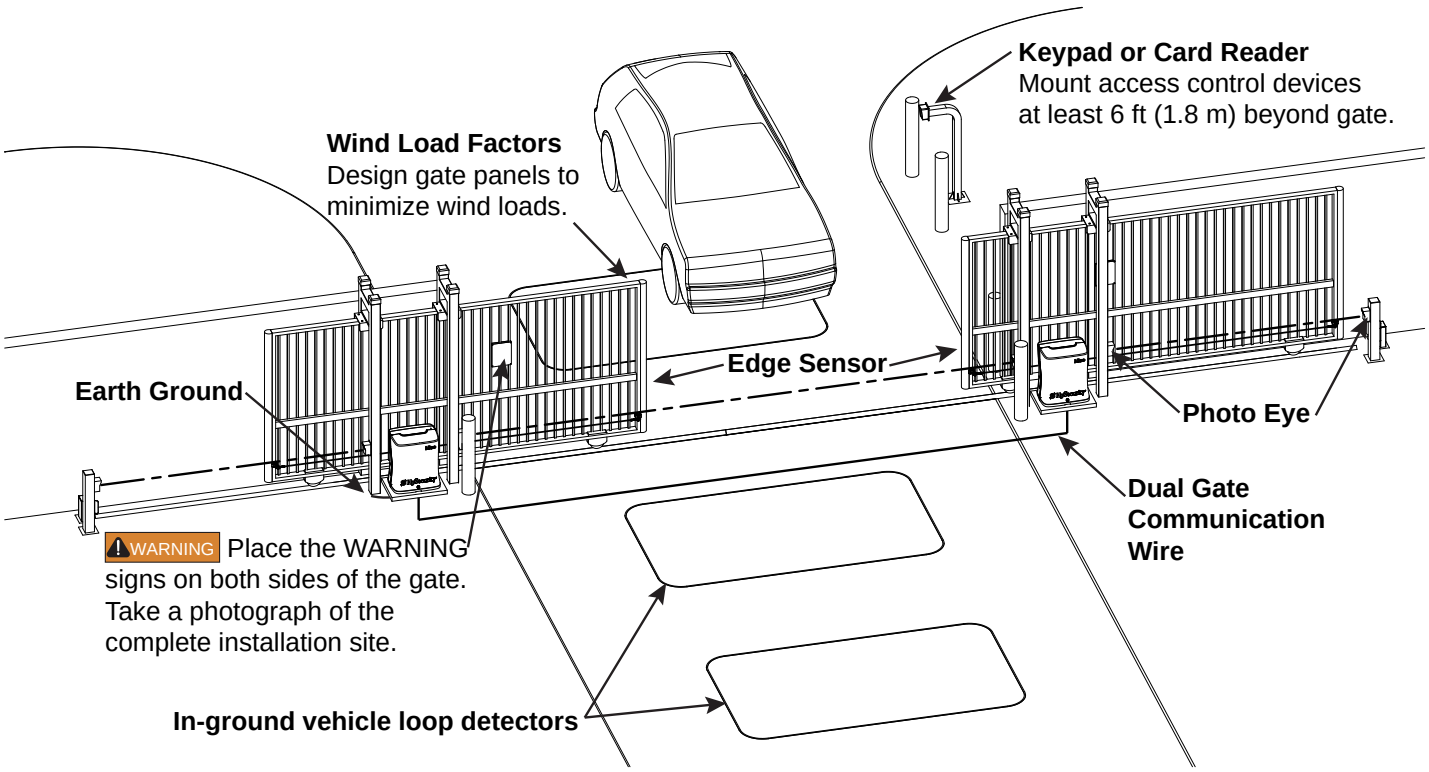

Bi-parting gate setup:

1. Install the primary and secondary operators.
2. Set up external entrapment sensors on both operators. Vehicle detectors may be installed in either operator. Make these connections before you connect the operators.
3. Test cycle the operators independently to make sure there are no problems with gate travel and open/close limits.
4. Install a twisted shielded 2 pair wire harness between the two operators. Match A-A, B-B, and COM-COM. Install the grounding shield on only one of the controller mounting brackets.

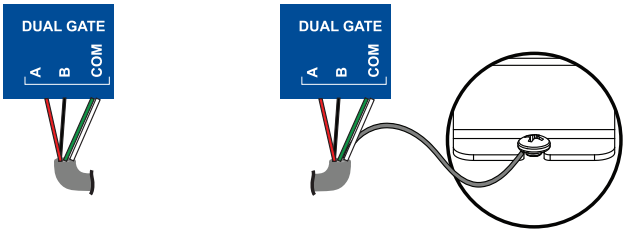

Figure 39. Dual Gate Connection

5. Set one operator as the primary and the other as the secondary.
6. Test the gate operation.
7. Adjust LEAF DELAY CLOSE and LEAF DELAY OPEN if required.

Sequenced gate wiring:

Sequenced gate wiring is similar to dual gate wiring. Instead of the DUAL GATE terminal, use the SEQ GATE terminal. Install a twisted shielded 2 pair wire harness between the two operators. Match A-A, B-B, and COM-COM. Install the grounding shield on only one of the controller mounting brackets. Figure 40. Refer to page 46 and page 47 for loop view diagrams.

When sequenced gates are being used in barrier arm and security gate system, both operators must be set to the same loop view setting. When sequenced gates is used for a Sally Port system, then one gate must be set to Sally A and the other must be set to Sally B.

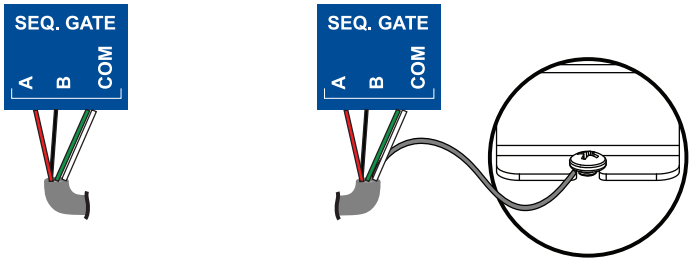

Figure 40. Sequenced Gate Connection

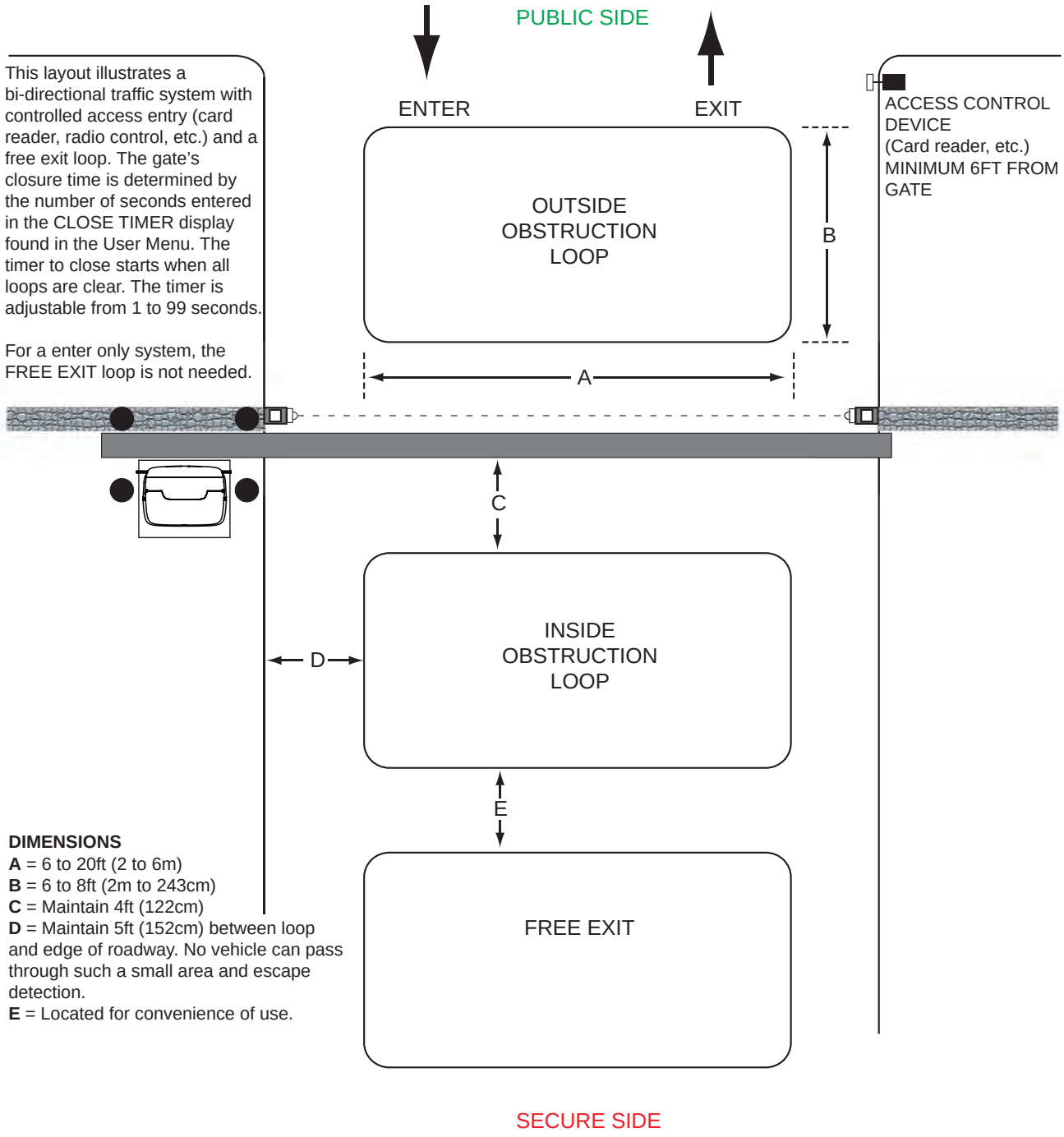

Vehicle Detectors and Loop Layout for Slide Gates

SEQUENCED GATE: LOOP VIEW #1

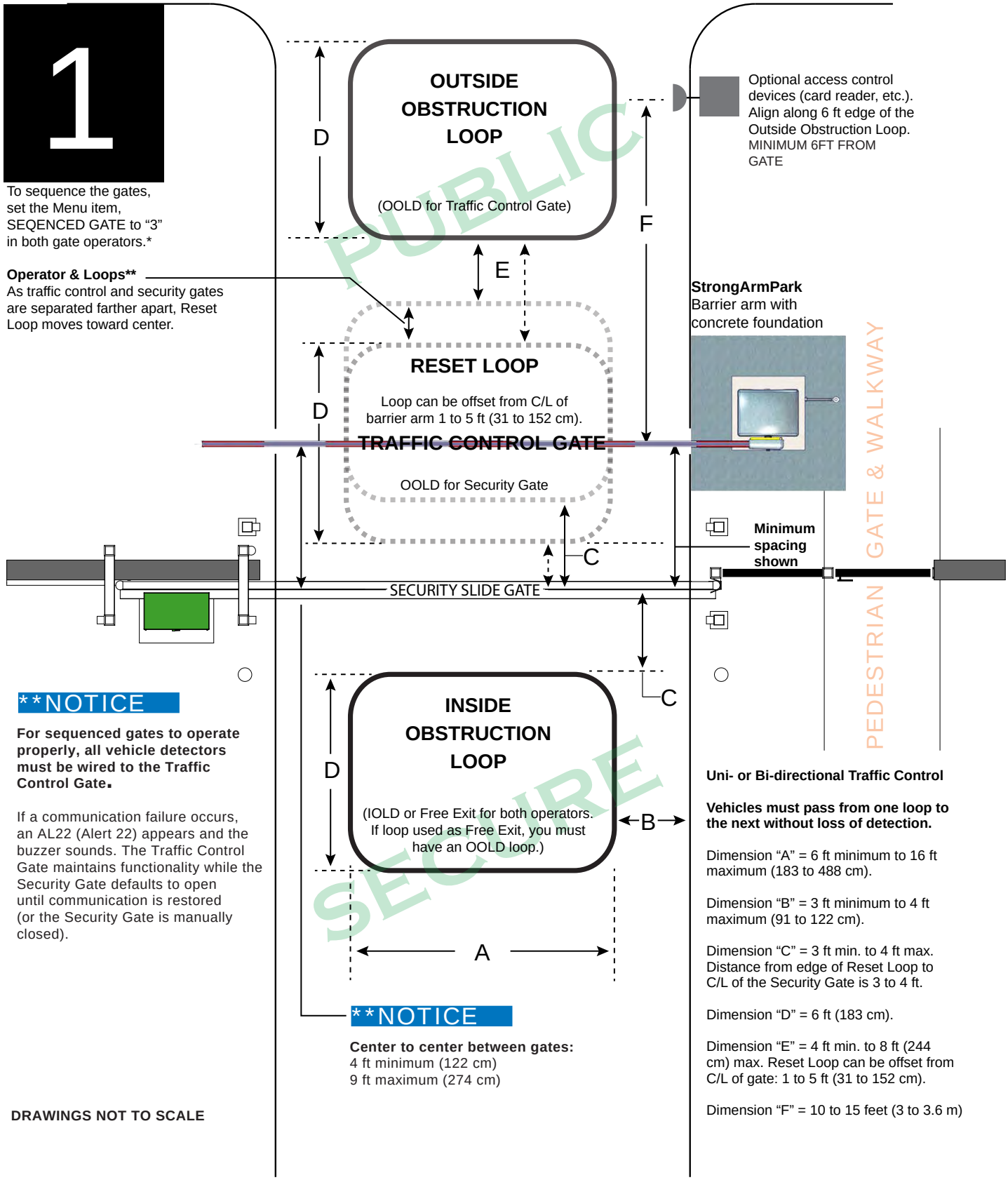

****NOTICE**

For sequenced gates to operate properly, all vehicle detectors must be wired to the Traffic Control Gate.

If a communication failure occurs, an AL22 (Alert 22) appears and the buzzer sounds. The Traffic Control Gate maintains functionality while the Security Gate defaults to open until communication is restored (or the Security Gate is manually closed).

DRAWINGS NOT TO SCALE

****NOTICE**

Center to center between gates:
4 ft minimum (122 cm)
9 ft maximum (274 cm)

Uni- or Bi-directional Traffic Control

Vehicles must pass from one loop to the next without loss of detection.

Dimension “A” = 6 ft minimum to 16 ft maximum (183 to 488 cm).

Dimension “B” = 3 ft minimum to 4 ft maximum (91 to 122 cm).

Dimension “C” = 3 ft min. to 4 ft max. Distance from edge of Reset Loop to C/L of the Security Gate is 3 to 4 ft.

Dimension “D” = 6 ft (183 cm).

Dimension “E” = 4 ft min. to 8 ft (244 cm) max. Reset Loop can be offset from C/L of gate: 1 to 5 ft (31 to 152 cm).

Dimension “F” = 10 to 15 feet (3 to 3.6 m)

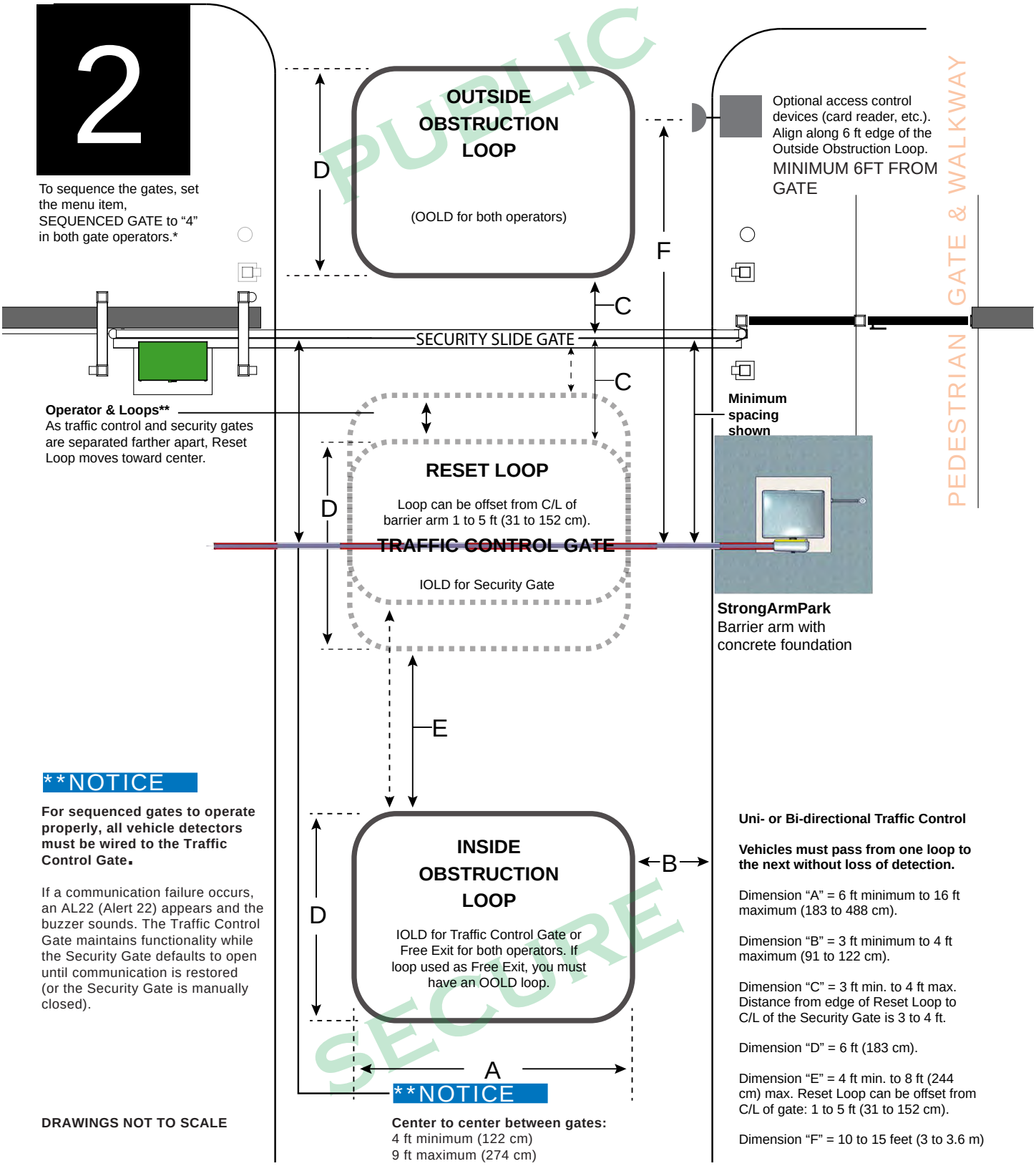

****NOTICE**

For sequenced gates to operate properly, all vehicle detectors must be wired to the Traffic Control Gate.

If a communication failure occurs, an AL22 (Alert 22) appears and the buzzer sounds. The Traffic Control Gate maintains functionality while the Security Gate defaults to open until communication is restored (or the Security Gate is manually closed).

DRAWINGS NOT TO SCALE

****NOTICE**

Center to center between gates:
4 ft minimum (122 cm)
9 ft maximum (274 cm)

Uni- or Bi-directional Traffic Control

Vehicles must pass from one loop to the next without loss of detection.

Dimension “A” = 6 ft minimum to 16 ft maximum (183 to 488 cm).

Dimension “B” = 3 ft minimum to 4 ft maximum (91 to 122 cm).

Dimension “C” = 3 ft min. to 4 ft max. Distance from edge of Reset Loop to C/L of the Security Gate is 3 to 4 ft.

Dimension “D” = 6 ft (183 cm).

Dimension “E” = 4 ft min. to 8 ft (244 cm) max. Reset Loop can be offset from C/L of gate: 1 to 5 ft (31 to 152 cm).

Dimension “F” = 10 to 15 feet (3 to 3.6 m)

- PROGRAMMABLE INPUTS
  - EMERGENCY INPUT
    - 0 EMERG CLOSE
    - 1 FIRE DEPT OPEN†
  - SENSOR #1 TYPE
    - 1 NOT USED†
    - 2 EYE CLOSE
    - 3 EDGE CLOSE
    - 4 EYE OPEN
    - 5 EDGE OPEN
    - 6 EDGE BOTH
  - SENSOR #2 TYPE 5†
    - "SEE SENSOR #1 TYPE"
  - INPUT #1 TYPE
    - 1 NOT USED
    - 2 EYE CLOSE
    - 3 EDGE CLOSE
    - 4 EYE OPEN
    - 5 EDGE OPEN
    - 6 EDGE BOTH
    - 7 NOT USED
    - 8 PARTIAL OPEN
    - 9 OPEN INTERLOCK
    - 10 TIME CLK OPEN
    - 11 NOT USED
    - 12 BLK FREE EXIT
    - 13 EXIT LOOP†
    - 14 INSIDE LOOP
    - 15 OUTSIDE LOOP
    - 16 CENTER LOOP
  - INPUT #2 TYPE (15†)
    - "SEE INPUT #1 TYPE"
  - INPUT #3 TYPE (8†)
    - "SEE INPUT #1 TYPE"

† = Indicates default

Table 8. SmartCNX Programmable Inputs Settings		
MENU DISPLAY	**SETTINGS**	**DESCRIPTION**
EMERGENCY INPUT	0 = EMERG CLOSE **1 = FIRE DEPT OPEN**	Activation of this input requires a +24VDC signal. Defaults to Fire Department Open input. When set to 1, signal received through this input overrides all photoelectric eyes and edge sensors and opens gate. Pressing RESET button (or the OPEN or the STOP button) is required before gate can be closed. When set to 0, the input can be used as an Emergency Close.
SENSOR #1 TYPE	**1 = NOT USED** 2 = EYE CLOSE 3 = EDGE CLOSE 4 = EYE OPEN 5 = EDGE OPEN	Monitored input per UL325 requirements for connection of external entrapment sensors - contact (edge sensor) or non-contact (photo eye). Edge Both is only available in Swing Gate operator types.
SENSOR #2 TYPE	SAME SETTINGS AS SENSOR #1 TYPE **5 = EDGE OPEN**	Same as Sensor #1 Type
INPUT #1 TYPE	1 = NOT USED 2 = EYE CLOSE 3 = EDGE CLOSE 4 = EYE OPEN 5 = EDGE OPEN 6 = EDGE BOTH (SWING ONLY) 7 = NOT USED 8 = PARTIAL OPEN (SLIDE ONLY) 9 = OPEN INTERLOCK 10 = TIME CLK OPEN 11 = NOT USED 12 = BLK FREE EXIT **13 = EXIT LOOP** 14 = INSIDE LOOP 15 = OUTSIDE LOOP 16 = CENTER LOOP	When set to 2-6, this input will be monitored and requires connection of an external sensor's 10K or 4-wired pulsed output. The common terminal for a monitored sensor must be connected to the switched common at the Sensor 1 or Sensor 2 input.
INPUT #2 TYPE	SAME SETTINGS AS INPUT #1 TYPE **15 = OUTSIDE LOOP**	
INPUT #3 TYPE	SAME SETTINGS AS INPUT #1 TYPE (2-6 not applicable) **8 = PARTIAL OPEN**	

SmartCNX Controller Input Examples Only

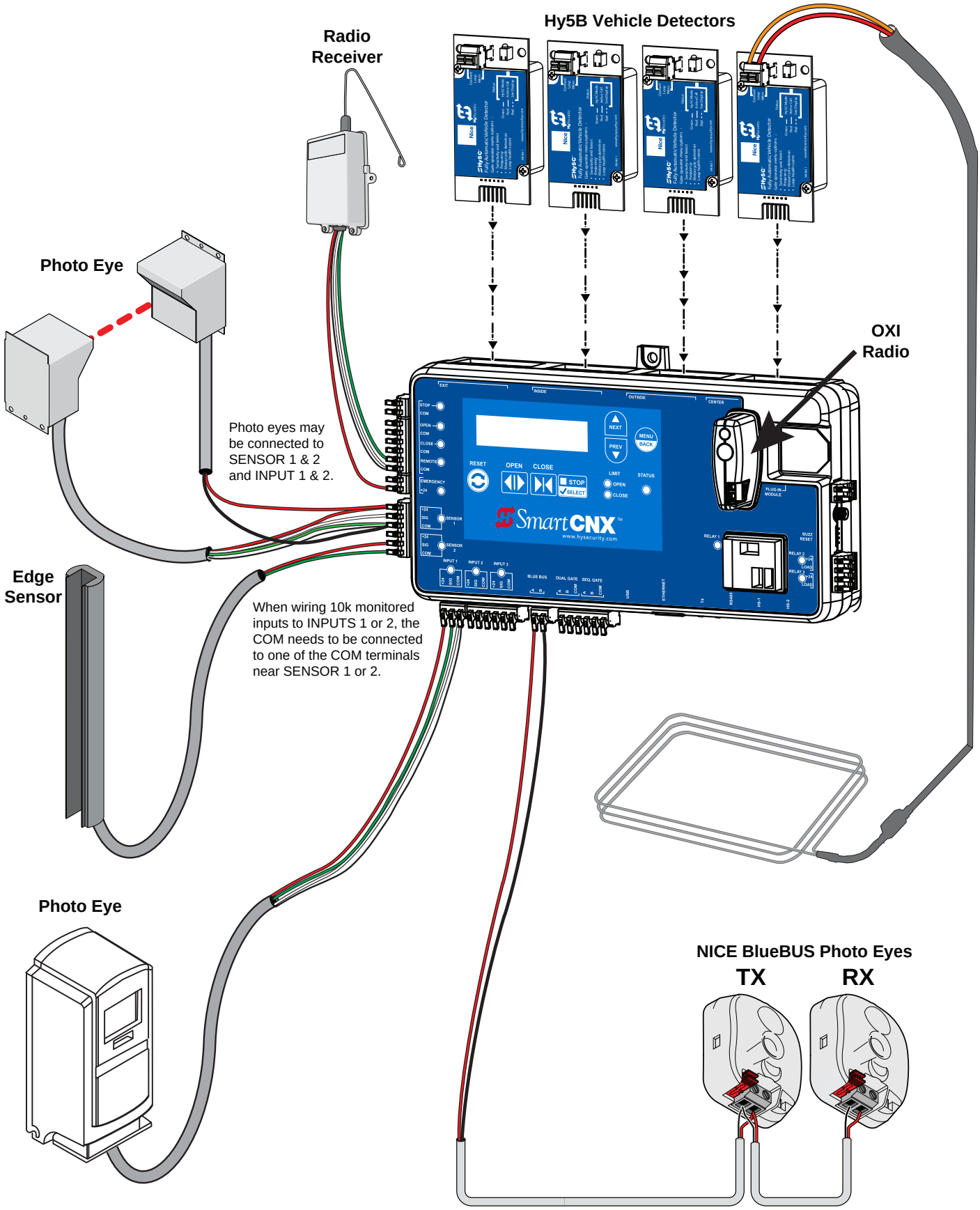

HySecurity provides one BlueBUS through-beam photo eye pair typically used as EYE CLOSE with the SlideSmart CNX.

Install a BlueBUS photo eye:

1. Verify the jumpers on transmitter (TX) and receiver (RX) are in the same positions (Figure 41).
2. Install the BlueBUS photo eyes in appropriate locations for entrapment protection (page 9).
3. Set the DC and AC switches to OFF.
4. Route the wires to the inside of the CNX chassis (Figure 7).
5. Install the wires between the TX and RX and then into BlueBUS terminals on the SmartCNX controller (Figure 31).

Note: With BlueBUS technology there are 4 total close direction pairs and 2 open direction pairs available. Pairs may either be connected in parallel to one another or directly to the SmartCNX Controller.

6. Set DC and AC switches to ON.
7. In EXTERNAL COMMUNICATIONS MENU, select BLUEBUS OPTIONS MENU, and set SCAN FOR DEVICES to 1 (ON).

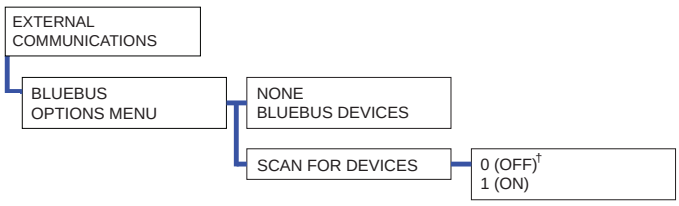

8. Display will show EYE CLOSE BlueBUS P1 or the P# for the jumper configuration used.
9. In ENTRAPMENT SENSOR RESPONSE menu, set the desired response action for each entrapment type.
10. Test the function of each sensor pair.

BlueBUS RX LED Status Light	Status
Off	No power
3 flashes, pause, repeat	Controller has not memorized the pair
Slow flashes	Good signal
Fast flashes	Weak signal
Always on	No signal

Direction	Pair	Jumper Positions (Pairs must match)
CLOSE	P1	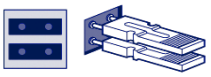
CLOSE	P2	
CLOSE	P3	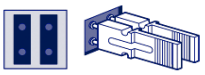
CLOSE	P4	
OPEN	P5	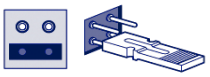
OPEN	P6	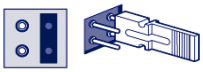

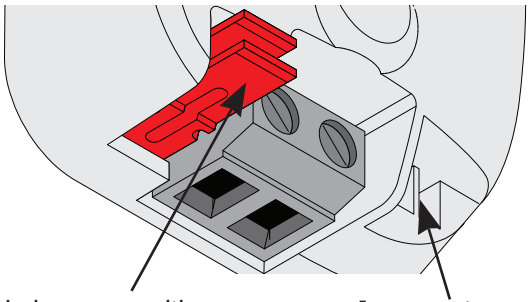

Example jumper position Close P1

Jumper storage

Figure 41. BlueBUS and Jumper Designation

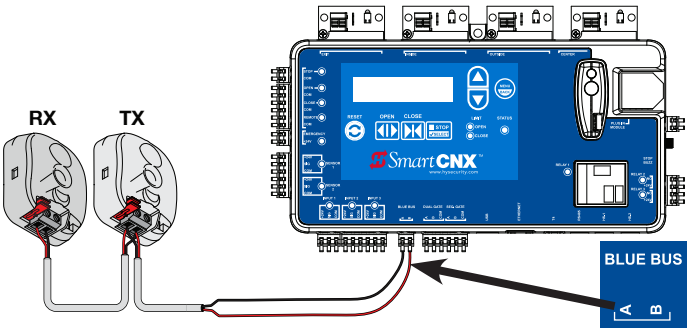

NOTE: Matching wire polarity is not required for BlueBUS photocells.

NOTE: Jumper locations shown here are for a CLOSE P1 installation.

Figure 42. Connect the BlueBUS Photo Eye

† = Indicates default

ENTRAPMENT SENSOR WIRING

HySecurity provides one edge sensor with the SlideSmart CNX typically used as hardwired EDGE OPEN.

Install the edge sensor:

1. Install the edge sensor in an appropriate location for entrapment protection (page 9).
2. Set DC and AC switches OFF.
3. Route the wires to the inside of the CNX chassis (Figure 7).
4. Install the wires into input Sensor #1, Sensor #2, or Input #1, or #2 (not #3) on the SmartCNX controller (Figure 43). Make sure to connect to a Sensor COM port for switched common for monitoring purposes.

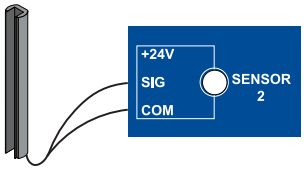

Figure 43. Sensor Connection

5. Set DC and AC switches to ON.
6. In PROGRAMMABLE INPUTS menu, select the SENSOR TYPE or INPUT TYPE for each external entrapment sensor. The indicator LED changes to green when sensor is activated or not installed correctly.
7. In ENTRAPMENT SENSOR RESPONSE menu, set the desired response action for each entrapment type.
8. Test the function of each sensor.

Install a non-BlueBUS photo eye:

Additional photo eyes can connect to the SmartCNX Controller terminals Sensor 1 - 2 and Input 1 - 2. Follow the same instructions for an edge sensor.

An example wiring diagram is shown below for a non-contact sensor (photo eye). Set any DIP-switches and jumpers according to manufacturer instructions for 10k output.

Example wiring for the EMX IRB-MON transmitter and receiver. Make sure to connect to a Sensor COM port for switched common for monitoring purposes.

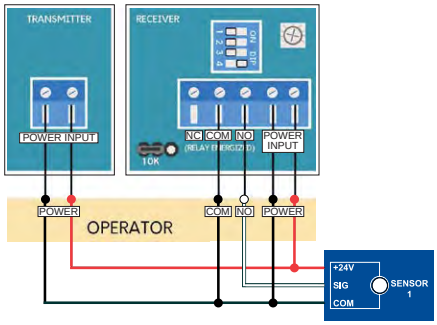

† = Indicates default

PROGRAMMABLE INPUTS

- EMERGENCY INPUT
  - 0 EMERG CLOSE
  - 1 FIRE DEPT OPEN†
- SENSOR #1 TYPE
  - 1 NOT USED†
  - 2 EYE CLOSE
  - 3 EDGE CLOSE
  - 4 EYE OPEN
  - 5 EDGE OPEN
  - 6 EDGE BOTH
- SENSOR #2 TYPE (1†)
  - "SEE SENSOR #1 TYPE"
- INPUT #1 TYPE
  - 1 NOT USED†
  - 2 EYE CLOSE
  - 3 EDGE CLOSE
  - 4 EYE OPEN
  - 5 EDGE OPEN
  - 6 EDGE BOTH
  - 7 NOT USED
  - 8 PARTIAL OPEN
  - 9 OPEN INTERLOCK
  - 10 TIME CLK OPEN
  - 11 NOT USED
  - 12 BLK FREE EXIT
  - 13 EXIT LOOP
  - 14 INSIDE LOOP
  - 15 OUTSIDE LOOP
  - 16 CENTER LOOP
- INPUT #2 TYPE (1†)
  - "SEE INPUT #1 TYPE"
- INPUT #3 TYPE (1†)
  - "SEE INPUT #1 TYPE"

ENTRAPMENT SENSOR RESPONSE

- IES SENSITIVITY (2†)
  - 0 (MAXIMUM) - 9
- PHOTO EYE ALIGN
  - 0 (OFF)†
  - 1 (ON)
- GATE EDGE LOGIC
  - 0 FULL OPEN†
  - 1 REVERSE 2S
- EYE CLOSE LOGIC
  - 0 STOP ONLY†
  - 1 REVERSE 2S
  - 2 FULL OPEN
- EYE OPEN LOGIC
  - 0 STOP ONLY†
  - 1 REVERSE 2S
- IES STOP ONLY
  - 0 (OFF)†
  - 1 (ON)
- REVERSAL LOGIC
  - 0 FULL OPEN†
  - 1 REVERSE 2S

ENTRAPMENT SENSORS COMPATIBLE WITH HYSECURITY OPERATORS

NOTICE

The SmartCNX Controller inputs use 10k or 4-wire pulsed monitoring. Connect sensor using sensor instructions for the compatible output connections. The SmartCNX Controller does not support normally closed inputs.

Table 9. Sensors Tested for Use with HySecurity Operators

	Mfg. Part #	Mfg.	Details	10k or 4-Wire Pulsed	Hysecurity Part #
Photo Eyes (Retroreflective)	E3K-R10K4-NR-1	Omron	40 ft max range limit	10k	MX000999
	NIR-50-325	EMX	45 ft max range limit	10k	
	IRB-RET	EMX	53 ft max range limit	Both	
	E-931-S50RRGQ	Seco-Larm	46 ft max range limit	10k	
Photo Eyes (Through-Beam)	IRB-MON	EMX	65 ft max range limit	10k	MX3990
	E-960-D90GQ	Seco-Larm	90 ft max range limit	10k	
	BlueBUS	Nice	65 ft max range limit		
Edge Sensors	Sentir Series	ASO Safety	Channel mount, high profile Channel mount, low profile Round, wraparound Square, wraparound	10k	AS1502-0440-05 AS1502-0430-05 AS1501-0760 AS1501-0790
	CPT210-2U-#-T2	Miller Edge	10k resistor termination (replace # with length requirement in feet)	10k	
Edge, Wireless Kits	iGAZE RE Kit	Transmitter Solutions	50 ft line of sight max range limit	10k	
	WEL-200 (kit with receiver and transmitter)	EMX	200 ft line of sight max range limit	Both	

The following examples show wiring to SENSOR 1, but one can also make these connections to SENSOR 2 as well as INPUT 1-2. Remember to change the setting for the SENSOR or INPUT terminal to match the connected device. Reference the manufacturer's installation instructions for help with programming or other setup issues.

Omron E3K-R10K4-NR-1 (Photo Eye)

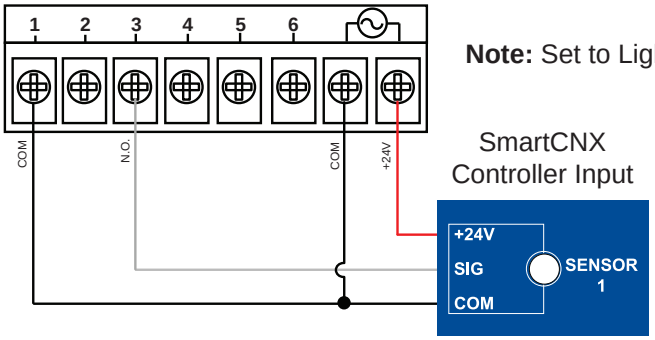

Note: Set to Light-On operation.

Figure 44. Omron E3K

EMX NIR-50-325 (Photo Eye)

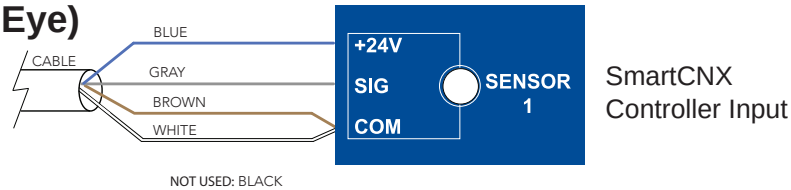

Figure 45. EMX NIR-50-325

EMX IRB-RET (Photo Eye)

NOTE: Set board as shown in red boxes per Figure 46. Jumpers are three pin type, and placed LEFT or RIGHT as indicated.

DIAGRAM A:

10K OHM RESISTIVE WIRING

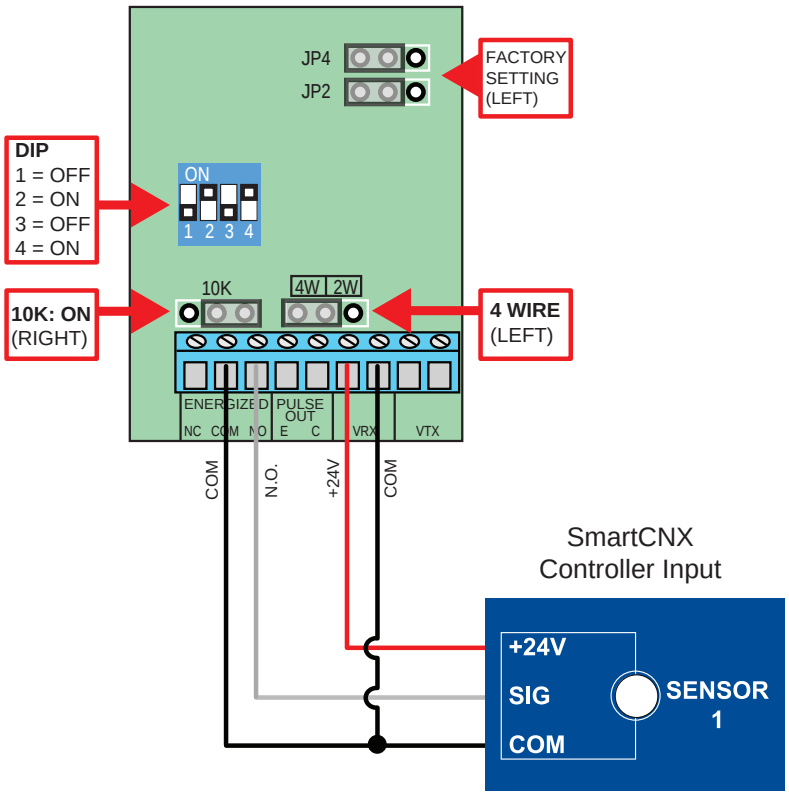

DIAGRAM B:

4-WIRE PULSED WIRING

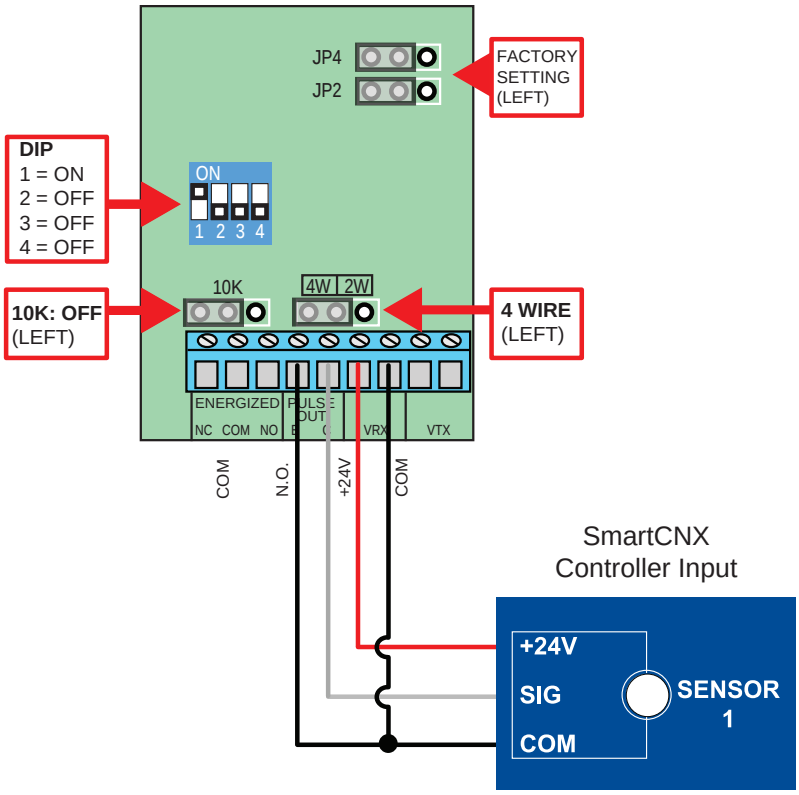

Figure 46. EMX IRB-RET Wiring - 10K OHM Resistive (Top) and 4-Wire Pulsed (Bottom)

Seco-Larm Enforcer Retro-Reflective (E-931-S50RRGQ) (Photo Eye)

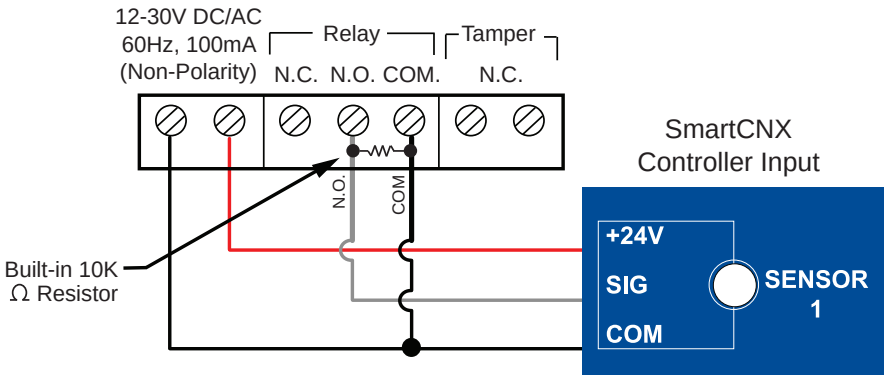

Figure 47. Seco-Larm Enforcer Retro-Reflective (E-931-S50RRGQ)

Seco-Larm Enforcer Through-Beam (E-960-D90GQ)

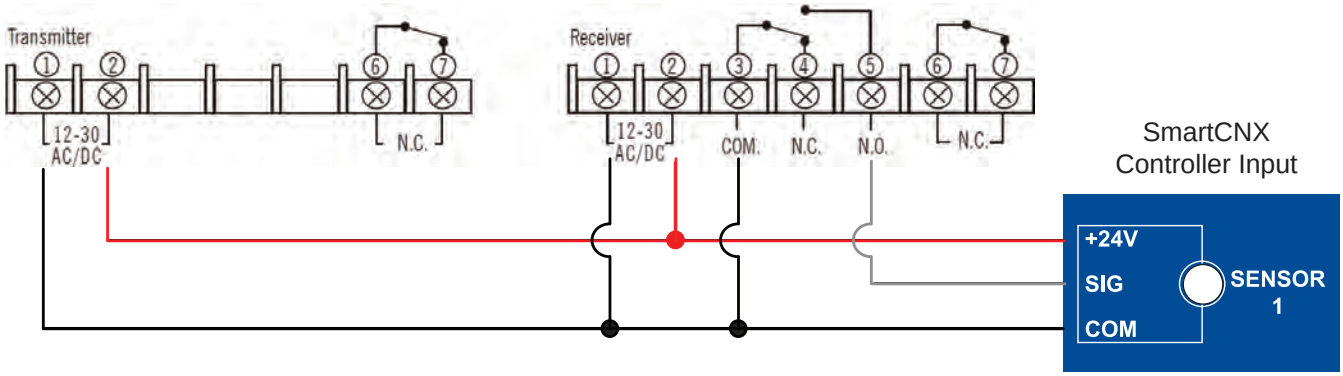

Figure 48. Seco-Larm Enforcer Through-Beam (E-960-D90GQ)

Transmitter Solutions iGaze RE Kit (Photo Eye)

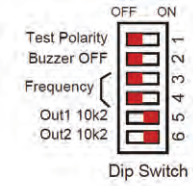

NOTE: Dashed lines indicate the secondary wiring connections if an additional CNX sensor input is wired to the sensor. See manufacturer's instructions for details.

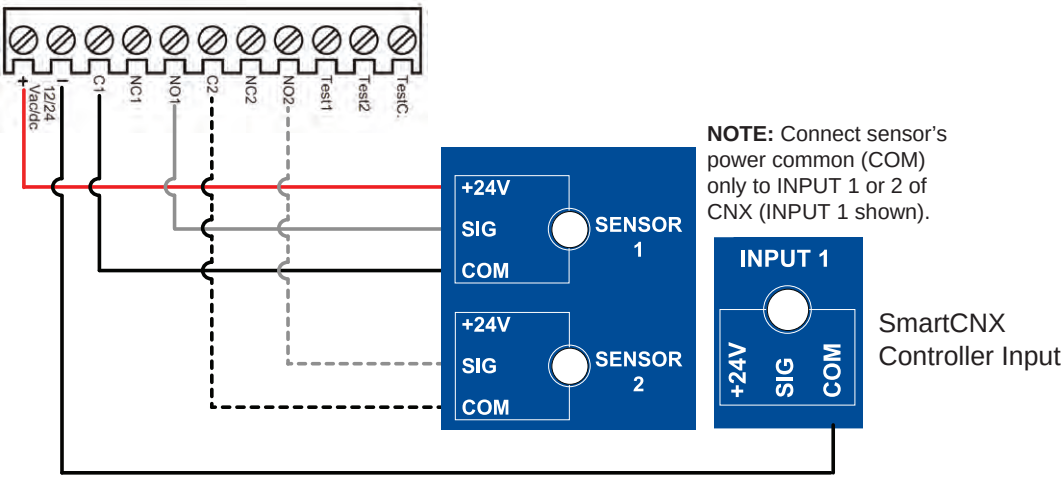

NOTE: Connect sensor's power common (COM) only to INPUT 1 or 2 of CNX (INPUT 1 shown).

Figure 49. Transmitter Solutions iGaze RE Kit

EMX WEL200 (Edge Sensor)

NOTE: Set board as shown in red boxes per FIG 58 for desired configuration. Jumpers are three pin type, and placed UPPER or LOWER as indicated. Dashed lines indicate the secondary wiring connections if an additional CNX sensor input is wired to the sensor. See manufacturer's instructions for details.

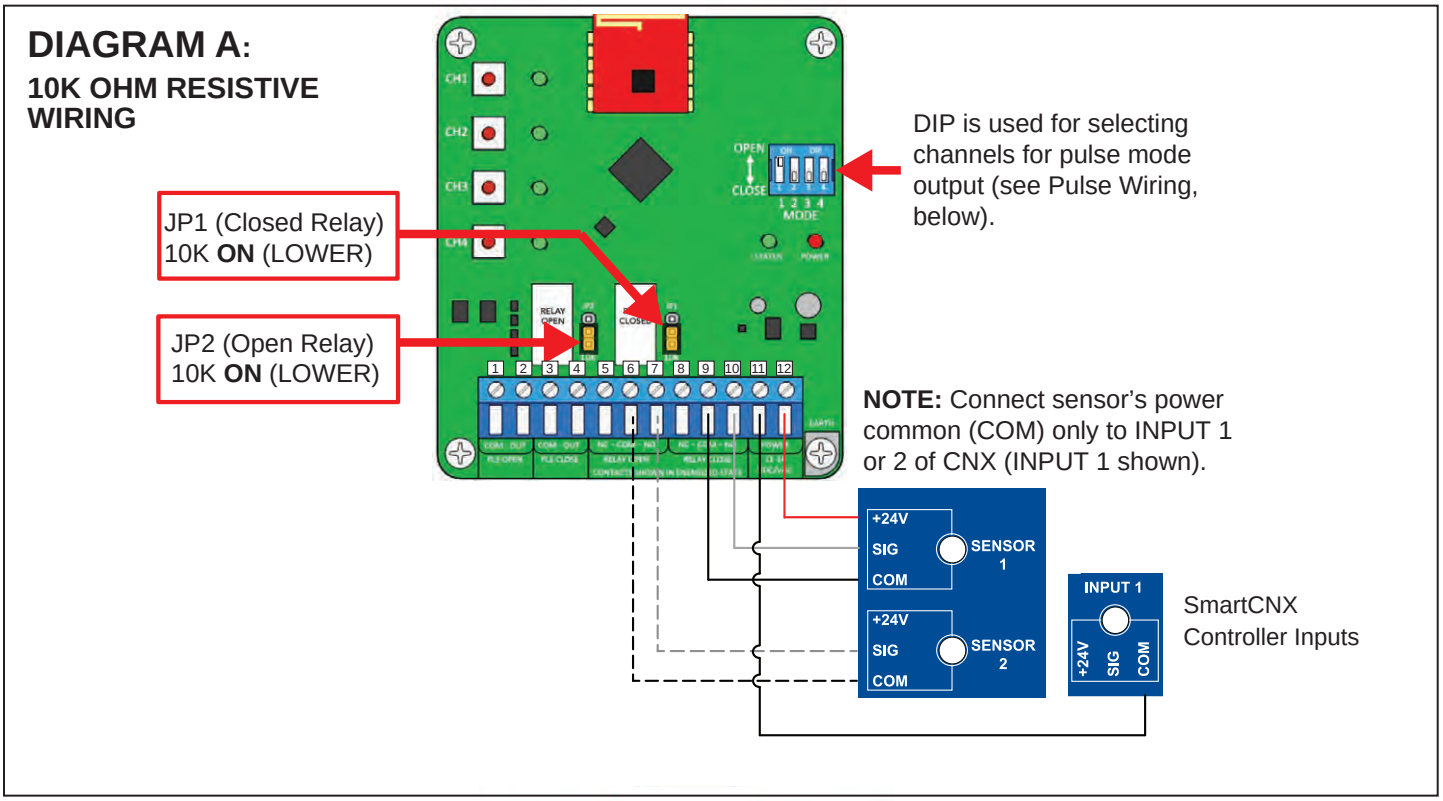

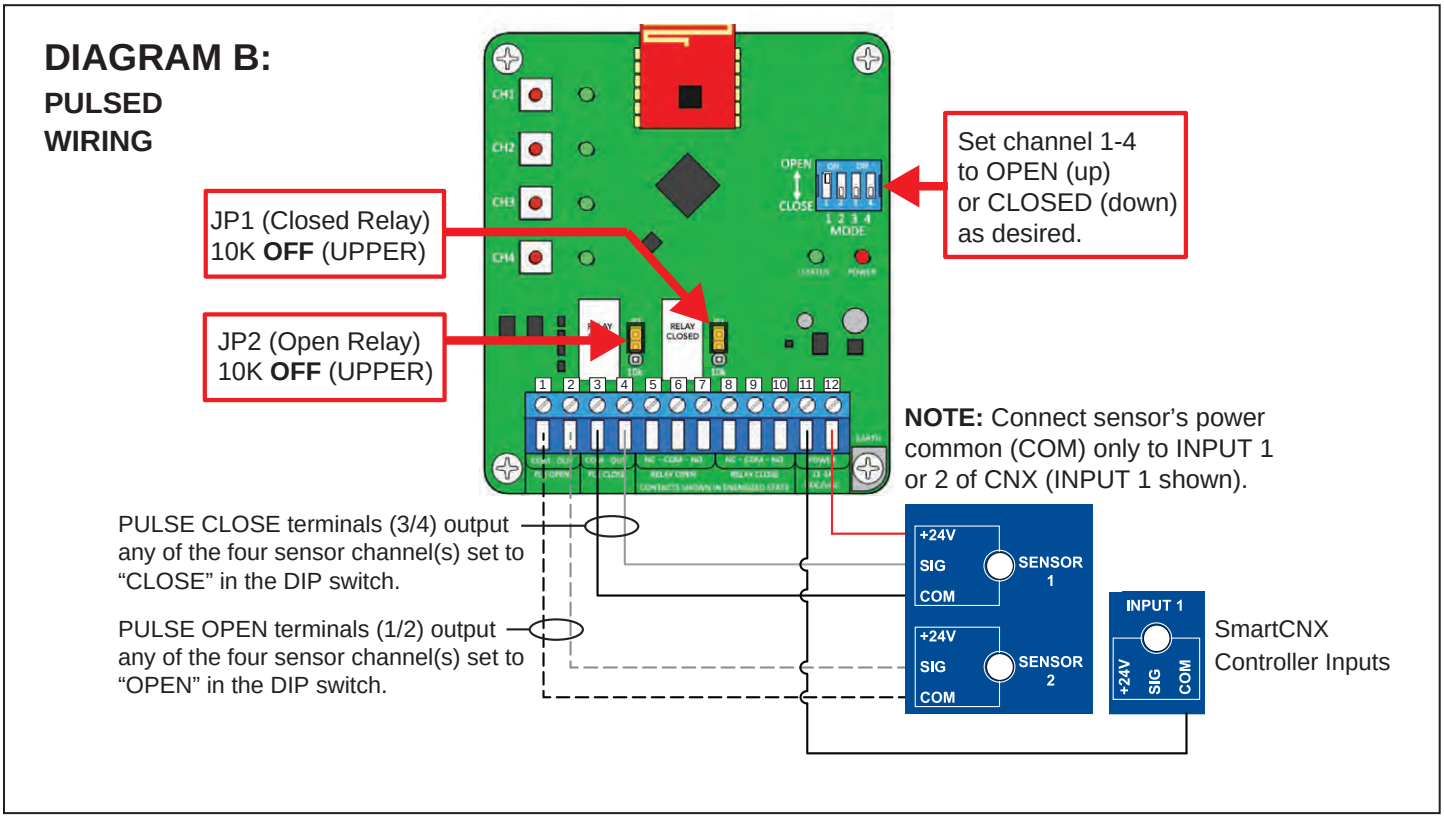

Figure 50. EMX WEL200 Wiring

Page intentionally left blank.

ENTRAPMENT SENSOR RESPONSE

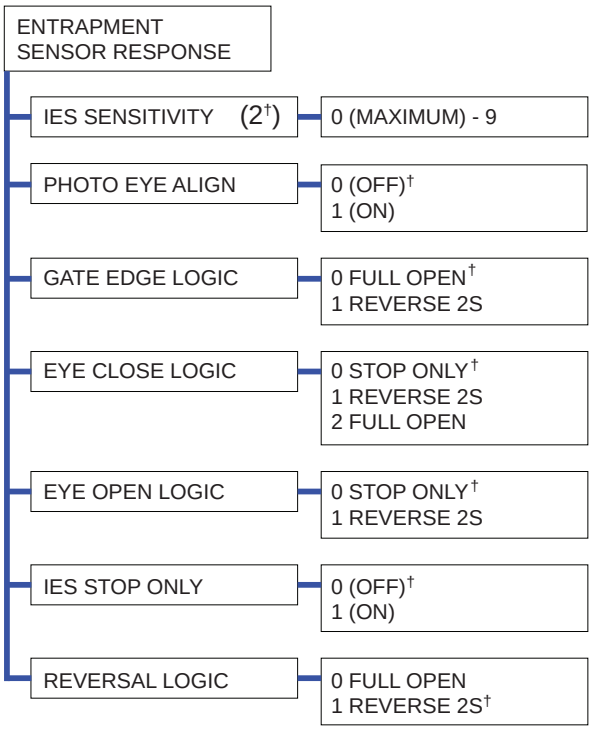

† = Indicates default

Table 10. SmartCNX Operator Configurations Settings		
MENU DISPLAY	**SETTINGS**	**DESCRIPTION**
IES SENSITIVITY	0 (MAXIMUM) 1 **2 (DEFAULT)** ... 9 (MINIMUM)	Adjusts the sensitivity of the internal inherent entrapment sensor (IES). Available settings are 0 to 9 with 0 being the most sensitive. HySecurity strongly recommends that you avoid setting the IES sensitivity higher than 6. **NOTE:** Before changing the IES sensitivity, make sure that the gate moves smoothly without obstruction. Fix any issues with gate hardware.
PHOTO EYE ALIGN	**0 = OFF** 1 = ON	When set to 1, operator assists photo eye alignment. Buzzer chirps once when transmitter and receiver are not aligned. When transmitter and receiver are aligned, buzzer chirps twice. If they go out of alignment again or if beam is blocked, buzzer will chirp once. PHOTO EYE ALIGN changes to OFF on the next limit contact, reset, or power cycle.
GATE EDGE LOGIC	**0 = FULL OPEN** 1 = REVERSE 2S	Default setting is a full-open reversal if gate edge close or edge both is triggered while closing. Optional setting of 1 causes gate to reverse for two seconds if triggered while closing. Gate Edge Open will reverse to full close when all open inputs and loop detectors are not active. There is no adjustment to gate edge open reversal.
EYE CLOSE LOGIC	**0 = STOP ONLY** 1 = REVERSE 2S 2 = FULL OPEN	Default setting is non-reversal if photo eye close is triggered while closing. A setting of 1 causes gate to reverse toward open for two seconds if triggered while closing. A setting of 2 reverses the gate to full open.
EYE OPEN LOGIC	**0 = STOP ONLY** 1 = REVERSE 2S	Default setting is non-reversal if photo eye open is triggered while opening. A setting of 1 causes gate to reverse travel and close for two seconds if triggered while opening.
IES STOP ONLY	**0 = OFF** 1 = ON	In a Usage Class 4 environment, operator can be set to stop gate and not reverse gate travel after an IES trip.
REVERSAL LOGIC	0 = FULL OPEN **1 = REVERSE 2S**	Sets the reversal logic for IES response. Default is reverse for 2 seconds. Set to 0 for full open.

To comply with UL 325 Safety Standards, CNX operators are equipped with a Type A, Inherent Entrapment Sensor (IES). The IES software monitors the average motor current when a gate is in motion and reverses direction of gate travel when the current exceeds a self-adapting threshold. A spike in motor current can be caused by the gate hitting a pedestrian, a collision with a vehicle, failing gate hardware, extreme wind gust, or any other force applied against the moving gate. To set the IES sensitivity for your site follow these instructions:

1. Press MENU on the Smart CNX Controller.
2. Press the UP or DOWN arrow to navigate to ENTRAPMENT SENSOR RESPONSE, press SELECT.
3. Press the UP or DOWN arrow to navigate to IES SENSITIVITY, press SELECT.
4. Press the UP or DOWN arrow to choose an IES SENSITIVITY, press SELECT to update the setting.

Note: Settings 0-8 are adaptive and setting 9 is fixed.

WARNING

Avoid setting the IES sensitivity to a fixed level (9 setting). The high motor current required for the IES to trip could cause severe injury or death to people caught in the moving gate.

5. Press BACK until the display shows the operator status.
6. Run the operator for 3 uninterrupted gate cycles so the IES can adapt to the new setting.
7. Apply force to the leading edge of the moving gate with an immovable obstruction to trigger the IES. Gate will stop motion and reverse for two seconds. “SAFE MODE” appears on the display.

WARNING

Do not enter the path of gate travel to test IES sensitivity. Vehicular gate operators must by their nature be powerful to function reliably. This power can cause injury or death to people caught in the moving gate.

8. Cycle the gate a few times to test the IES sensitivity.

Note: In Safe Mode, the automatic close timer is disabled, but any open or close input restarts gate motion. Safe Mode clears when full travel reached or Reset button pushed.

Note: A second IES trip before Safe Mode is cleared, results in an Entrapment Mode Alert which can be cleared with a Reset on the display, an open input, stop input, or stop button on CNX cover.

WIND LOAD FACTORS & SITE PREP

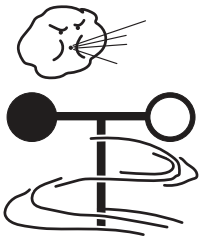

Wind load is always a factor when considering the appropriate gate for a particular site. Solid gate panels produce a larger wind load than gates with slats or open decorative features. If you are installing a gate operator in a high wind area, gate design will affect the load on the gate operator because wind load acts the same as an obstruction. Good gate panel design presents a low surface area to reduce the wind load.

If the gate is heavy and near weight capacity of what the gate operator can handle (see specifications), make sure it has an open design that allows wind to flow through it. A solid or semi-solid gate design under certain wind load conditions may cause damage to gate operator and is not covered by the HySecurity Limited Warranty.

Several factors play into calculations of wind load on a gate panel. To find out maximum wind speed in areas around the United States, search for US government wind speed maps on the internet. If you don’t know how to calculate for wind load, ask a mechanical engineer or site architect for assistance prior to installing gate operator and gate panels.

When the IES trips, it sends a signal to gate operator to stop and reverse direction. This feature may be falsely triggered in excessively windy conditions because wind itself, acting over surface area of gate panel, can provide necessary force to trigger IES.

CAUTION

Do not adjust IES sensitivity to accommodate for inappropriately designed gate panels. It may also pose a safety hazard. Compensating for wind loads by adjusting IES sensitivity to a level which, when encountering an obstruction, ignores obstruction and fails to reverse direction. For more information, refer to Adjusting the IES Sensitivity.

Page intentionally left blank.

USER RELAY OUTPUTS

- RELAY 1 – 3 LOGIC
  - 0 DISABLED†
  - 1 CLOSE LIMIT
  - 2 CLOSE PULSE
  - 3 OPEN LIMIT
  - 4 OPEN PULSE
  - 5 WARN B4 OP
  - 6 GATE LOCK
  - 7 FORCE OPEN
  - 8 OPEN 2LONG
  - 9 SAFE MODE
  - 10 ENTRAPMENT
  - 11 TAILGATER
  - 12 OUTSIDE LOOP
  - 13 LOITERING
  - 14 NEAR LIMIT
  - 15 ALERT/FAULT
  - 16 MOTOR RUNNING
  - 17 AC POWER LOSS
  - 18 LOW BATTERY
  - 19 FLASHER
  - 20 EXIT LOOP
  - 21 INSIDE LOOP
  - 22 CENTER LOOP
  - 23 PRISON LOCK
  - 24 PARTIAL OPEN
  - 25 BATTERY OK
  - 26 EXIT PULSE
  - 27 NOT OP AC
  - 28 FLASH AC
  - 29 ARM ENTRY
  - 30 ARM EXIT
  - 31 RESET TKT
  - 32 BACKOFF
  - 33 TRANS IN
  - 34 TRANS OUT
  - 35 TENANT IN
  - 36 TENANT OUT
  - 37 SPEC IN
  - 38 SPEC OUT
  - 39 UNK IN
  - 40 UNK OUT
  - 41 TEST OPEN
  - 42 ARM BREAK
  - 43 WARN THRU
  - 44 POL PULSE
  - 45 OUTS CLOSE
  - 46 TIMER OPEN
  - 47 OXI ACCESSORY
  - 48 OXI ACC/1-MIN
- RELAY 4 – 11 LOGIC
  - 0 DISABLED† – 48 OXI ACC/-MIN

RELAY 4 – 11 ARE VISIBLE AND CONFIGURABLE ONLY WITH OPTIONAL I/O EXPANSION MODULE WHICH CONNECTS VIA COMMUNICATION CABLE (MX4330 IN THE I/O EXPANSION MODULE KIT) FROM HS-2 ON THE SMARTCNX CONTROLLER TO HS-A ON THE I/O EXPANSION MODULE

† = Indicates default

Table 11. SmartCNX User Relay Outputs Settings		
MENU DISPLAY	**SETTINGS**	**DESCRIPTION**
RELAY 1-3 LOGIC	0 = DISABLED 1 = CLOSE LIMIT 2 = CLOSE PULSE 3 = OPEN LIMIT 4 = OPEN PULSE 5 = WARN B4 OP 6 = GATE LOCK 7 = FORCE OPEN 8 = OPEN 2 LONG 9 = SAFE MODE 10 = ENTRAPMENT 11 = TAILGATER 12 = OUTSIDE LOOP 13 = LOITERING 14 = NEAR LIMIT 15 = ALERT/FAULT 16 = MOTOR RUNNING 17 = AC POWER LOSS 18 = LOW BATTERY 19 = FLASHER 20 = EXIT LOOP 21 = INSIDE LOOP 22 = CENTER LOOP 23 = PRISON LOCK 24 = PARTIAL OPEN 25 = BATTERY OK 26 = EXIT PULSE 27 = NOT OP AC 28 = FLASH AC 29- 40 = PARKING ARM OPERATORS ONLY 41 = TEST OPEN 42 = NOT USED 43 = WARN THRU 44 = POL PULSE 45 = OUTS CLOSE 46 = TIMER OPEN 47 = OXI ACCESSORY 48 = OXI ACC/1-MIN	See Table 12
RELAY 4-11 LOGIC	SEE RELAY 1 LOGIC SETTINGS **(0)**	See Table 12

Table 12. User-Programmable User Relays - Function Options		
No.	**Name**	**Description**
1	Close limit output	Creates an interlock signal to another operator's interlock input, or simply to indicate that gate is secure or not. Relay is released when fully-closed limit switch is tripped. Relay is energized when fully-closed limit is released. (Any open command energizes relay.)
2	Close limit pulse output	Used in a sequenced system to command a second machine to close. Generates a brief pulsed output that occurs when close limit is triggered.
3	Open limit output	Indicates gate is at full-open position. Output becomes active when an open-limit is triggered and deactivates when open-limit is released or a close command is received. Use this output for a traffic light.
4	Open limit pulse output	Triggers a sequenced barrier arm gate operator to open. Generates a brief pulsed-output when open-limit is triggered. An additional pulse is also generated with any new open command even when gate is already fully-opened.
5	Warn before/during operate output	Controls an external warning device. This output is active whenever internal warn before operate buzzer is sounding but the relay output is constant on. Activation timing of this relay is controlled by setting Warn Before Operate.
6	Gate Lock output	Controls external solenoid locks or magnetic locks. In both directions of travel, this output is activated about 7/10ths of a second before operator starts moving the gate.
7	Gate forced open output	Activated if gate is forced off closed limit switch and operator is not able to restore gate to full closed position within four seconds. The buzzer resets itself in 30 seconds but relay stays active until gate receives a run command.
8	Gate open too long output	Activates when gate is open longer than the user-selected period of time. Adjustable from a 0 second to 15 second to 135 seconds delay in 30-second increments. **NOTE:** OPEN TIME ALERT adjustments can be made in the menus.
9	Safety Mode Alert output	Activated when system is in Safety Mode or Entrapment Mode. Safety Mode occurs upon an impact with an obstruction. Entrapment Mode means gate is stopped and occurs if inherent entrapment sensor triggers or if emergency input is activated while system is in Safety Mode.
10	Entrapment Mode Alert output	Activated only when system is in Entrapment Mode.
11	Unauthorized Vehicle Entry output	Activated when a second vehicle enters from outside without a valid input from an access control device. The OOLD and IOLD loops must be capable of being triggered at the same time for this relay to ever activate. This output releases when an access control input signals open or gate reaches the close limit position.
12	Outside Obstruction Vehicle Detector output	This output is active whenever Outside Obstruction Loop Detector is tripped. Interlocks an entry device to prevent pedestrian use.
13	Loitering Alert	Indicates vehicle is loitering on Outside Obstruction Loop with the gate closed. Adjustable from a 0 second to 15 second to 135 second delay in 30-second intervals. **NOTE:** LOITERING ALERT adjustments can be made in the menus.
14	Gate nearing full travel output	Activated when gate is approaching full open or full closed. Relay activates three feet from where software expects limit switch to be triggered whether moving toward full open, full close, or in a reverse travel mode.
15	Gate Failure output	Activated to report occurrence of problem. Indicates the system is in an Error, Fault, Alert, or Entrapment Mode. If active, gate is disabled.
16	Motor Running output	Active when motor is running and gate is in motion.
17	AC Power Failure output	This relay is normally energized and drops with loss of AC power.

Table 12. User-Programmable User Relays - Function Options		
No.	**Name**	**Description**
18	DC Power Failure output	Activated when battery power is very low, but output ceases when battery is dead (18 volts). Relay is triggered when battery is less than 21 volts.
19	Flasher Relay	Controls flashing lights to pulse once per second. Relay is constantly pulsing except when open limit switch is triggered. Recommended to use User Relay 2 or 3 since it is an electronic switch.
20	Free Exit Loop Vehicle Detector output	Active whenever Exit Loop is tripped.
21	Inside Obstruction Vehicle Detector output	Active whenever Inside Obstruction Vehicle Detector is tripped
22	Center Loop Detector output	Active whenever Center (Shadow) loop detector is tripped.
23	External Latching Gate Lock Output	Not functional in SmartCNX operators.
24	Gate at Partial Open Position	Active when partial open position is reached or exceeded. (Slide gates only)
25	DC Power Alert	Active when on AC power or the battery voltage is above 21V. When used with User Relay 2, this option can shed electrical loads to conserve battery energy.
26	Free Exit Loop Detector pulse	Outputs a 250ms pulse when the free exit vehicle detector is tripped.
27	Not Open (w/ AC power)	Activated when gate is not on open limit and AC power is present. Deactivated when AC power fails or gate is on open limit.
28	Flasher (w/ AC power)	Output identical to relay #19 and pulses relay 500 ms/sec when gate not on open limit and AC power is present. Deactivated when AC power fails or gate is on open limit.
29	Arm Entry Ticket Dispenser	Not used.
30	Arm Exit Ticket Dispenser	Not used.
31	Resert Ticket Dispenser Pulse	Not used.
32	Backoff Pulse	Not used.
33	Transient In Pulse	Not used.
34	Transient Out Pulse	Not used.
35	Tenant In Pulse	Not used.
36	Tenant Out Pulse	Not used.
37	Special In Pulse	Not used.
38	Special Out Pulse	Not used.
39	Unknown In Pulse	Not used.
40	Unknown Out Pulse	Not used.
41	Test Open Pulse	Output pulses five seconds after close limit is activated. Typically used for cycle testing.
42	Break-Away Switch Output	Not used.
43	Warn Before	Combination of relays #5 and #16.
44	Partial Open Limit Pulse	Pulses for 250ms when gate, commanded with Partial Open input, reaches Partial Open Limit, or, gate is past Partial Open Limit and Partial Open input is activated.
45	Outside Obstruction/Arming Loop Detector	Activated when OOLD/OALD detector input tripped and gate closed. Used for testing purposes.

Table continued on next page

Table 12. User-Programmable User Relays - Function Options		
No.	**Name**	**Description**
46	Timer Open	Relay activates when 7 day timer is programmed and the timer is active.
47	OXI Accessory	Latching output controlled by an OXI remote. When pairing a remote, a button can be programmed to energize a relay and latch it until the button is pressed a second time.
48	OXI Accessory/1-min	Output controlled by an OXI remote. When pairing a remote, a button can be programmed to energize a relay and latch it for 1 minute or until the button is pressed a second time, whichever comes first.

The three relays on the SmartCNX Controller are configurable to perform a wide range of options for integration with external devices.

- Accessory power limited to 2A at 24VDC across all inputs and relays.
- Relay capacity: (1) Mechanical 20A max at 240VAC (Figure 52 Item 9). (2) Solid state relays 30VDC, 2A max (Figure 52 Item 10, 11).

1. Install the relay controlled device according to the manufacturer's instructions.
2. Route the relay wires to the SmartCNX Controller (Figure 51).

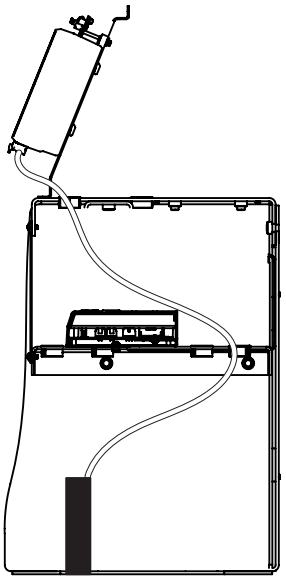

Figure 51. Route Relay Wires

3. Install the relay wires in the appropriate relay port: mechanical (Relay 1) or solid state (Relay 2 and 3) (Figure 52).

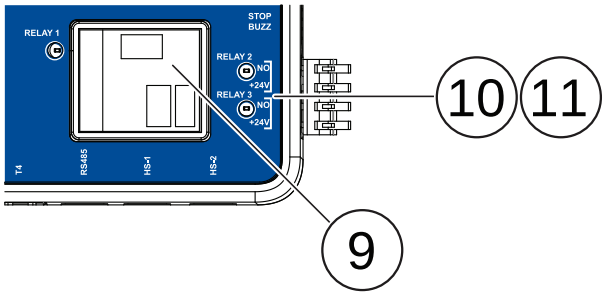

Figure 52. Relay Ports

4. Press MENU on the SmartCNX Controller.
5. Press the UP or DOWN arrow to navigate to USER RELAY OUTPUTS, press SELECT.
6. Press the UP or DOWN arrow to navigate to RELAY LOGIC, press SELECT.
7. Press the UP or DOWN arrow to highlight the appropriate setting, press SELECT.
8. Press BACK until the SmartCNX controller resets and operator status displays.

USER RELAY OUTPUTS

RELAY 1 – 3 LOGIC

0 DISABLED	25 BATTERY OK
1 CLOSE LIMIT	26 EXIT PULSE
2 CLOSE PULSE	27 NOT OP AC
3 OPEN LIMIT	28 FLASH AC
4 OPEN PULSE	29 ARM ENTRY
5 WARN B4 OP	30 ARM EXIT
6 GATE LOCK	31 RESET TKT
7 FORCE OPEN	32 BACKOFF
8 OPEN 2LONG	33 TRANS IN
9 SAFE MODE	34 TRANS OUT
10 ENTRAPMENT	35 TENANT IN
11 TAILGATER	36 TENANT OUT
12 OUTSIDE LOOP	37 SPEC IN
13 LOITERING	38 SPEC OUT
14 NEAR LIMIT	39 UNK IN
15 ALERT/FAULT	40 UNK OUT
16 MOTOR RUNNING	41 TEST OPEN
17 AC POWER LOSS	42 ARM BREAK
18 LOW BATTERY	43 WARN THRU
19 FLASHER	44 POL PULSE
20 EXIT LOOP	45 OUTS CLOSE
21 INSIDE LOOP	46 TIMER OPEN
22 CENTER LOOP	47 OXI ACCESSORY
23 PRISON LOCK	48 OXI ACC/1-MIN
24 PARTIAL OPEN	

RELAY 4 – 11 LOGIC

0 DISABLED – 48 OXI ACC/-MIN

RELAY 4 – 11 ARE VISIBLE AND CONFIGURABLE ONLY WITH OPTIONAL I/O EXPANSION MODULE WHICH CONNECTS VIA COMMUNICATION CABLE (MX4330 IN THE I/O EXPANSION MODULE KIT) FROM HS-2 ON THE SMARTCNX CONTROLLER TO HS-A ON THE I/O EXPANSION MODULE

RELAY OUTPUTS - MECHANICAL

Maglocks and solenoids are common examples of relay driven devices used with gate operators to increase security. Follow these instructions to connect a maglock or solenoid to the SmartCNX controller:

1. Follow manufacturers instructions to install and position the relay driven device. HySecurity recommends Input 3 COM.
2. Set the DC and AC switches to OFF.
3. Connect COM on RELAY 1 to any COM terminal on the SmartCNX controller.
4. Connect the power lead from the maglock or solenoid to power. You can pull +24VDC from anywhere on the controller labeled +24V.
5. For a maglock, connect to the NC connector on RELAY 1. For a solenoid, connect to the NO connector.
6. Set the DC and AC switches to ON.
7. Press MENU on the SmartCNX Controller.
8. Use the UP or DOWN button to navigate to USER RELAY OUTPUTS and press SELECT.
9. Use the UP or DOWN button to navigate to RELAY 1 LOGIC and press SELECT.
10. Use the arrow buttons to navigate to 6 GATE LOCK and press SELECT.
11. Press BACK until gate status display appears.

Note: Relay 1 can handle up to 240VAC for external power source use.

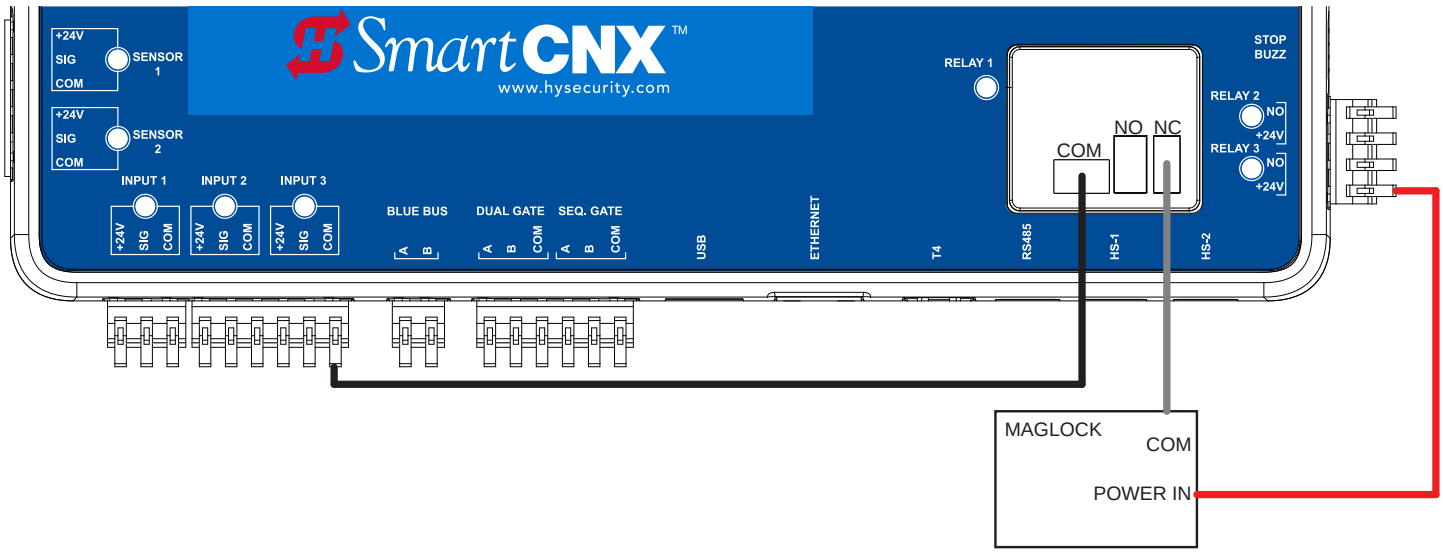

Figure 53. Maglock Wiring Example. For Solenoid Connect Solenoid COM to Relay 1 NO.

Solid state relay (Relay 2 and Relay 3) wiring diagrams.

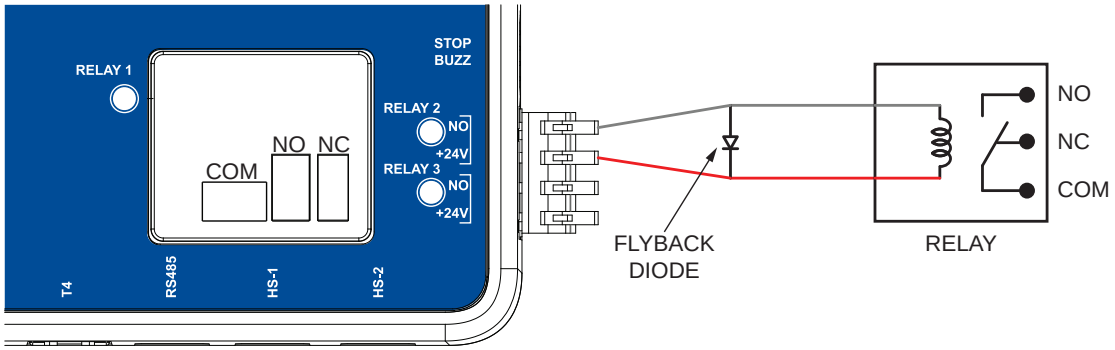

Figure 54. Wiring a 24V Accessory

Note: A flyback diode protects the SmartCNX controller form voltage spikes caused by switching the coil in the relay. HySecurity recommends a 1n4007 diode for use with most accessories.

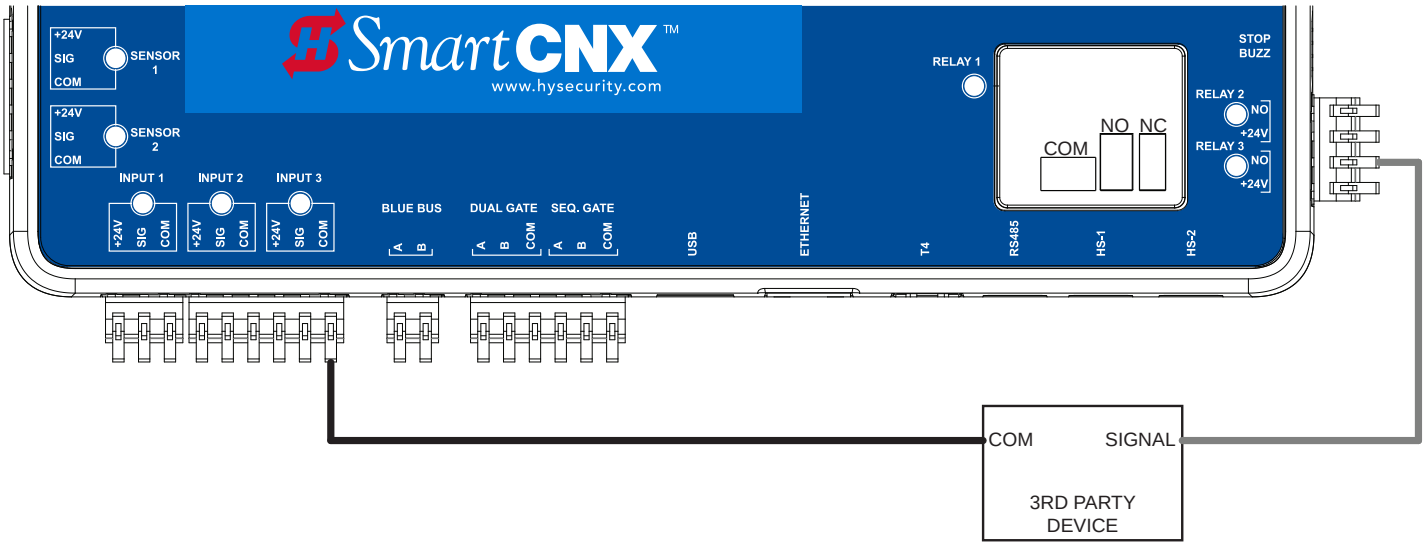

Figure 55. Wiring a 3rd Party Device

Note: Relay 2 and Relay 3 on the SmartCNX controller use a switched common signal when the relay is triggered.

Note: Relay 2 and Relay 3 can only handle up to 24VDC.

LOOP OPTIONS

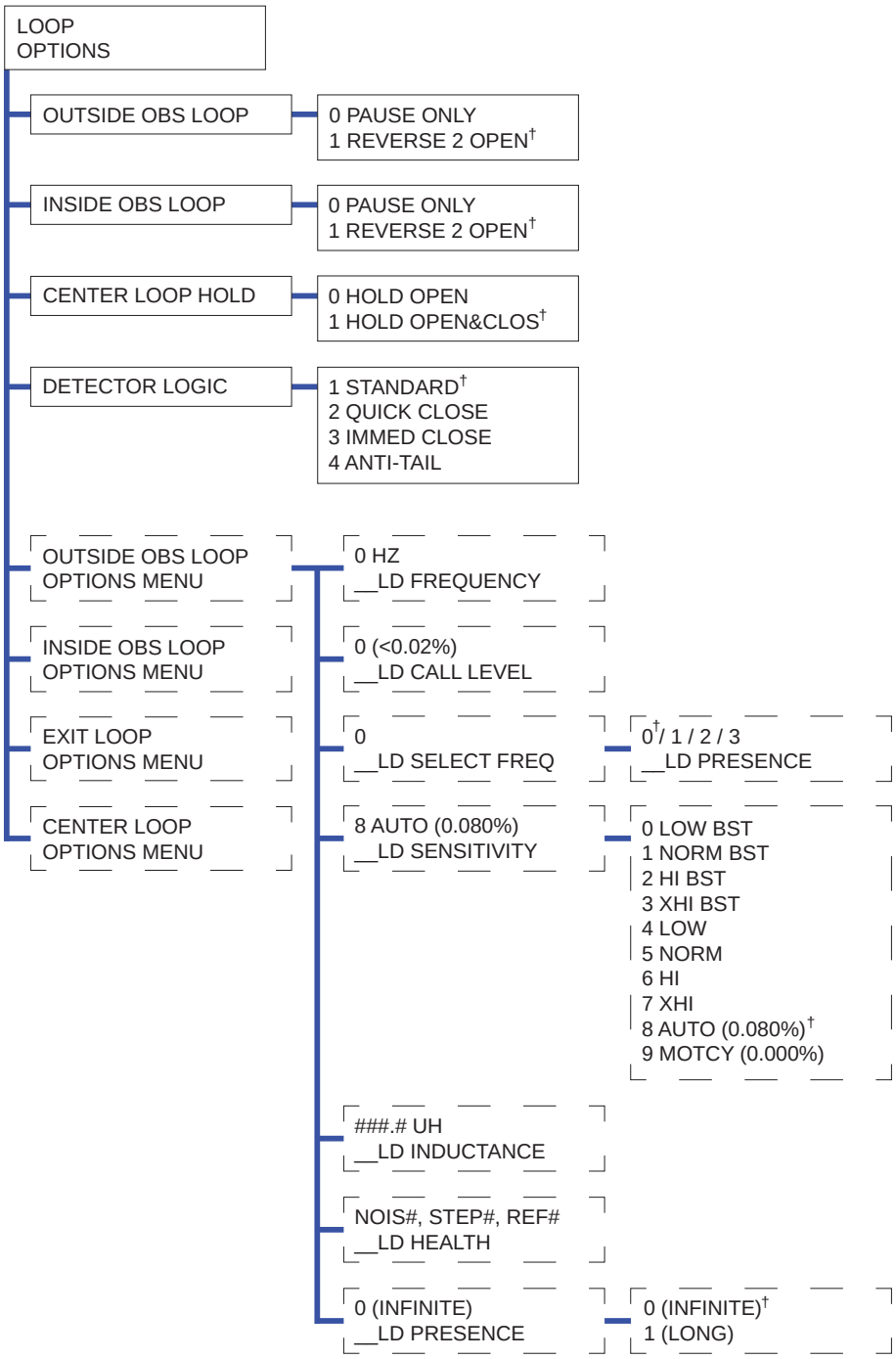

MENU STRUCTURES FOR LOOP OPTIONS ARE VISIBLE AND CONFIGURABLE ONLY WHEN AN HY5B MODULE IS INSTALLED INTO THE SMARTCNX CONTROLLER. OOLD, IOLD, ELD, AND CLD SUB-MENUS ARE IDENTICAL.

† = Indicates default

Table 13. SmartCNX Loop Options Settings		
MENU DISPLAY	**SETTINGS**	**DESCRIPTION**
OUTSIDE OBS LOOP	0 = PAUSE ONLY **1 = REVERSE 2 OPEN**	Default is for full reversal when Outside Obstruction Loop is triggered while closing. A setting of 0 causes gate to only pause when triggered. Gate closure continues as soon as loop is clear again.
INSIDE OBS LOOP	0 = PAUSE ONLY **1 = REVERSE 2 OPEN**	Default is for full reversal when Inside Obstruction Loop is triggered while closing. A setting of 0 causes gate to only pause when triggered. Closure begins as soon as loop is clear again.
CENTER LOOP HOLD	0 = HOLD OPEN **1 = HOLD OPEN&CLOS**	Swing only. When set to 1, an active center loop will prevent a full open gate from closing and a full closed gate from opening. When set to 0, an active center loop will prevent a full open gate from closing and will have no effect on a closed gate. The center loop has no effect on a gate that is in between limits or a slide gate.
DETECTOR LOGIC	**1 = STANDARD** 2 = QUICK CLOSE 3 = IMMED CLOSE (SLIDE ONLY) 4 = ANTI-TAIL (SLIDE ONLY)	This selection determines whether close timer begins to count down after vehicles have departed detector loops or whether close timer will count down while the loops are occupied. Gate can only close when all loop detectors are clear. Default settings causes Close Timer to start when all loops are clear. A setting of 2 causes Close Timer to start when open limit is reached. A setting of 3 forces the Close Timer to 0 when the OOLD and IOLD are tripped simultaneously (SLIDE ONLY). A setting of 4 stops the gate when OOLD and IOLD are tripped simultaneously and closes from that point when the loops clear (SLIDE ONLY).
Note: Loop Options menu continues on next page.		

Note: On the SlideSmart CNX the center loop settings menu is hidden and a center loop will not affect gate movement. However, it can still be connected and programmed to trigger a relay.

Table 13. SmartCNX Loop Options Settings		
MENU DISPLAY	**SETTINGS**	**DESCRIPTION**
OUTSIDE OBS LOOP OPTIONS MENU		
__LD FREQUENCY		Displays the center loop detector frequency
__LD CALL LEVEL		Displays the center loop detector call level
__LD SELECT FREQ	0-3	Set the center loop detector frequency 0-3
__LD SENSITIVITY	0 = LOW BST 1 = NORM BST 2 = HI BST 3 = XHI BST 4 = LOW 5 = NORM 6 = HI 7 = XHI **8 = AUTO (0.080%)** 9 = MOTCY	Set the loop detector sensitivity Note: Automatic Gate Compensation (AGC) can be disabled while in the Hy5B loop menu. In the menu, hold the reset button for 3 seconds. The AGC menu will appear where it can be turned on or off with the arrow buttons and select button.
__LD INDUCTANCE		Displays the center loop detector inductance
__LD HEALTH		Displays the center loop detector health
__LD PRESENCE	**0 = INFINITE** 1 = LONG	INFINITE = A site where standing or parked vehicular traffic (on large area loops) is a daily or consistent basis, INFINITE presence setting is a viable option. When loop may have vehicles parked on it for more than several hours and it must hold the call, set presence to INFINITE. LONG = With sensitivity set to A (AUTO) and a large sedan stationary on loop, LONG presence may hold call for many hours before vehicle's presence is tuned out. Then, stationary vehicle is ignored and unaffected portion of loop becomes operational. In contrast, with sensitivity set to M (MOTORCYCLE), default threshold only lasts about 1 hour before presence of motorcycle on loop is tuned out.
INSIDE OBS LOOP OPTIONS MENU	SAME AS OUTSIDE LOOP OPTIONS MENU	
EXIT LOOP OPTIONS MENU	SAME AS OUTSIDE LOOP OPTIONS MENU	
CENTER LOOP OPTIONS MENU	SAME AS OUTSIDE LOOP OPTIONS MENU	

INSTALL AN HY5B AND VEHICLE LOOP DETECTOR

There are 4 Hy5B ports on the SmartCNX controller: Free Exit, Outside Obstruction, Inside Obstruction, and Center. Refer to Appendix A for a standard loop layout illustration.

1. Route the loop detector wires through the operator chassis to the SmartCNX Controller
2. Switch off DC and AC power.
3. Connect the wires to the Hy5B module.
4. Plug the Hy5B into the appropriate port (remove rubber plug).
5. Use zip ties and the holes in the aluminum controller bracket to neatly organize the loop lead wires to keep wires out of the way and prevent them from moving.
6. Switch on DC and AC power. The display will show loop detectors 'Initializing'.
7. In LOOP OPTIONS menu configure the appropriate loop detector settings.

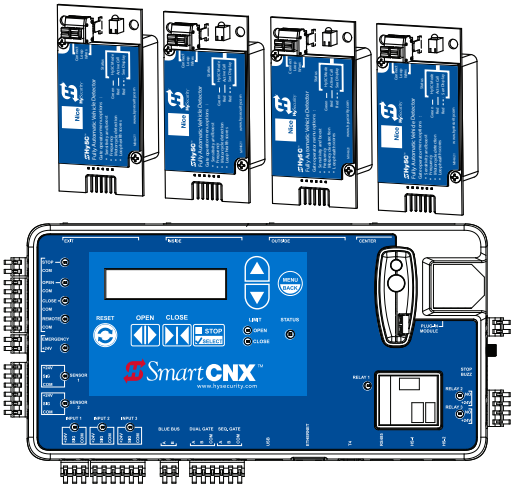

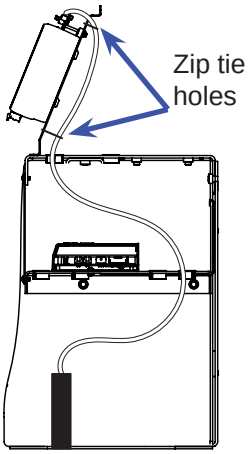

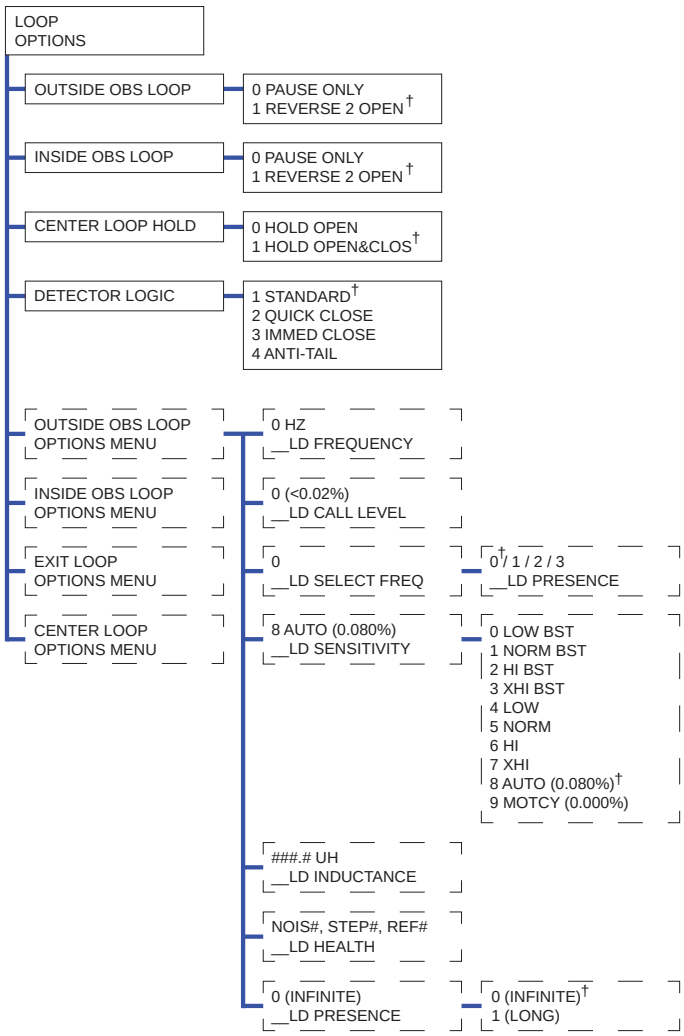

MENU STRUCTURES FOR LOOP OPTIONS ARE VISIBLE AND CONFIGURABLE ONLY WHEN AN HY5B MODULE IS INSTALLED INTO THE SMARTCNX CONTROLLER. OOLD, IOLD, ELD, AND CLD SUB-MENUS ARE IDENTICAL.

† = Indicates default

Table 14. Loop Noise Score		
Score	**Meaning**	**Possible Impact on Gate Operation**
7	Near perfect, no discernible noise	None
6	Very slight noise	None
5	Some noise	Not likely - Holding detects
4	Enough noise to be a concern	Not likely - False detects, holding detects
3	Noise probably impacting operation	Likely - False detects, holding detects
2	Significant noise	Likely - False detects, holding detects, will not reset
1	Very significant noise	Very likely - False detects, holding detects, will not reset
0	Severe noise	Very likely - False detects, holding detects, will not reset

Table 15. Loop Step Changes Score		
Score	**Meaning**	**Possible Impact on Gate Operation**
7	No step changes recorded	None
6	One step change recorded	Possible - False detects, locked in call
5	2 to 3 step changes recorded	Likely - False detects, locked in call
4	4 to 5 step changes recorded	Likely - False detects, locked in call
3	More than a few step changes recorded	Very likely - False detects, locked in call
2	Significant number of step changes recorded	Very likely - False detects, locked in call
1	Very significant number of step changes recorded	Very likely - False detects, locked in call
0	Severe number of step changes recorded	Very likely - False detects, locked in call

Table 16. Loop References Changes Score		
Score	**Meaning**	**Possible Impact on Gate Operation**
7	Very stable reference	None
6	Stable reference	None
5	Edge of normal temperature swing	None
4	Wide temperature swing	Not likely - False detects
3	Edge of effects due to any temperature swing	Not likely - False detects
2	Significant reference movement	Possible false detects
1	Very significant reference movement	Possible false detects
0	Severe reference movement	Possible false detects

Possible Causes of Loop Noise:

- Inductively-Coupled Loop Cross-talk – This is interference between two or more active loops. If all detectors used are Hy5Bs, this is not the source of the noise as the operator turns on and off each detector in sequence to ensure that this type of cross-talk cannot occur. If you are experiencing this issue, installing all Hy5Bs will be the most effective mitigation technique. If this is not possible, changing the frequency of one or both of the loops that are interfering usually reduces the cross-talk to acceptable levels.
- Capacitively-Coupled Interference – This is interference between electrical wiring in close proximity to each other (usually in the same conduit) for significant distances (usually 50 feet or more). The longer the distance the more pronounced the effect. Twisting of the loop lead in wires will help with this. If a shielded cable is used for the loop wires, the shield of the cable should be left floating (unconnected) at both ends.
- Other Electrical Interference – This is usually interference that is coupled in to the loop, lead-in, or detector itself. Changing the loop frequency on the detector may help. If the interference is coupling in to the loop itself, a figure 8 loop may be needed to mitigate the source of interference. If the interference is at the detector, additional shielding may be needed.

Possible Causes of Loop Step Changes:

- Loose Electrical Connections – If there are any splices in the loop wires, they should be checked. Wire nuts should never be used in loop connections and usually will create these types of issues. If there are splices, they should be soldered if possible or at the very least crimped.
- Failed Loop Wire Insulation – This normally occurs when there is a high moisture content in the air that condenses(rain, fog, or dew) and the loop wire insulation is damaged in some way and this moisture can wick its way to that failure point. Using a megaohm meter on the loop and getting a reading of less than 100 megaohms will usually this type of issue.
- Conductor Fatigue – If the loop is installed across a joint in the driving surface or the lead-in is exposed to significant vibration, the conductor in the wire may fatigue and change its resistance slightly when flexed. With this type of failure,the failed wire must be replaced.
- Objects Embedded in the Saw Slot – It is possible for objects (nails, screws, etc.) to become embedded in the saw slot sealant and over time get pressed down in to the loop wire (especially if good installation practices are not followed). Once this object touches a loop wire conductor, the loop must be replaced.

Possible causes of loop reference changes:

- Wide Temperature Swings – The reference within the detector will change with temperature. If there are wide temperature swings during a 24-hour period, this score will go down and is expected and normal. The detector is designed to deal with ambient temperature changes of 2°F every minute. Rates of change faster than that may cause false detections (this usually only occurs if the cabinet is opened). If you are in an area that sees quick temperature changes (hot or cold), some insulation around the detectors may help.
- Temperature Sensitivity – It is possible that some of the components on the detector are abnormally temperature sensitive.

Note: Refer to Hy5B User and Reference Guide (MX4125) for full information about Hy5B vehicle detectors.

- EXTERNAL COMMUNICATIONS
  - USB OPTIONS MENU
    - SAVE LOG
      - 0 (NO)†
      - 1 (YES)
    - LOAD SW
      - 0 (NO)†
      - 1 (YES)
    - CLR EVENT LOG
      - 0 (OFF)†
      - 1 (ON)
    - CAPTURE DEBUG
      - 0 (OFF)†
      - 1 (ON)
  - NETWORK SETUP MENU
    - HySecurity Gate GATENAME
      - HySecurity Gate ^
    - DHCP
      - 0 (OFF)†
      - 1 (ON)
    - 10.3.3.2 IPV4 ADDRESS
      - XX.X.X.X ^
    - 255.255.255.0 NETMASK IPV4
      - XX.X.X.X ^
    - 10.3.3.2 GATEWAY IPV4
      - XX.X.X.X ^
    - 8.8.8.8 DNS 1 IPV4
      - XX.X.X.X ^
    - 8.8.4.4 DNS 2 IPV4
      - XX.X.X.X ^
    - fec0::2 IPV6 ADDRESS
      - XXXX::X ^
    - 64† SUBNETLEN IPV6
      - 1-128 SUBNETLEN IPV6
    - fec0::1 IPV6 ADDRESS
      - XXXX::X ^
    - 2001::4860:4860:: DNS 1 IPV6
      - XXXX::X ^
    - 2001::4860:4860:: DNS 2 IPV6
      - XXXX::X ^
    - RESET DEFAULTS
      - 0 (NO)†
      - 1 (YES)
  - BLE OPTIONS MENU
    - BLE ENABLE
      - 0 (OFF)†
      - 1 (ON)
    - HYSECURITY GATE BLE PIN: XXXXXX

† = Indicates default

Table 17. SmartCNX External Communications Settings		
MENU DISPLAY	**SETTINGS**	**DESCRIPTION**
USB OPTIONS MENU		USB options submenu, only appears when a USB drive is connected to the SmartCNX Controller.
SAVE LOG	**0 = NO** 1 = YES	Set to YES to save the current log to a USB drive.
LOAD SW	**0 = NO** 1 = YES	Set to YES after plugging in a USB drive with software updates to load new software.
CAPTURE DEBUG	**0 = OFF** 1 = ON	Set to ON with a USB drive plugged in to constantly capture debug data for advanced troubleshooting help.
CLEAR USB LOG	**0 = NO** 1 = YES	Set to YES to clear the current log.
NETWORK SETUP MENU*		Network setup submenu
HYSECURITY GATE GATE NAME	HySecurity Gate ^	Set the name of the operator. Default name includes a four digit number for easy identification when pairing with bluetooth.
DHCP	**0 = OFF** 1 = ON	Used to assign dynamic IP addresses to devices on a network.
IPV4 ADDRESS	XX.X.X.X ^	IP address on IPv4
NETMASK IPV4	XXX.XXX.XXX.X ^	Subnet mask on IPv4
GATEWAY IPV4	XX.X.X.X ^	Gateway on IPv4
DNS 1 IPV4	X.X.X.X ^	Domain Name System address 1 on IPv4
DNS 2 IPV4	X.X.X.X ^	Domain Name System address 2 on IPv4
IPV6 ADDRESS	XXXX::X ^	IP address on IPv6
SUBNETLEN IPV6	1-128 (**64**)	IPV6 prefix length
GATEWAY IPV6	XXXX::X ^	Gateway on IPv6
DNS 1 IPV6	XXXX::XXXX::XXXX:: ^	Domain Name System address 1 on IPv6
DNS 2 IPV6	XXXX::XXXX::XXXX:: ^	Domain Name System address 2 on IPv6
MAC ADDRESS	XXXXXX-XXXXXX	Manufacturer set Media Access Control address
RESET DEFAULTS	**0 = NO** 1 = YES	Reset network settings.
BLE OPTIONS MENU		Bluetooth low energy submenu
BLE ENABLE	**0 = OFF** 1 = ON	Enable or disable bluetooth low energy. Bluetooth logo will appear on gate status display.
HYSECURITY GATE PIN	XXXXXX	PIN to connect to the SmartCNX controller with the SMART CNX installer app. HySecurity Gate PIN only appears when BLE Enable is set to 1 (ON).
Note: External Communications menu continues on page 80.		

*The NETWORK SETUP MENU settings are for the built-in HyNet functionality. Contact an IT professional for assistance with these settings to connect to a network. The SmartCNX controller can also connect to a network through the RS485 port and a separate HyNet module.

Download the firmware to a USB drive:

1. Go to support.hysecurity.com, click on Software, click SmartCNX Code vh6.##, and click h.6.##.cnx to download the .cnx firmware file.
2. Connect a USB drive to your computer.

Note: FAT32 is the preferred file system for USB drives used for CNX firmware updates.

3. Navigate to the download folder with the .cnx file.
4. Copy the .cnx file to the root folder of the USB drive.
5. Safely disconnect the USB drive.

Install the firmware:

1. Move the gate to the open position to allow free flow of traffic. The SmartCNX Controller ignores all inputs and outputs during the firmware update.
2. Plug the USB drive into the USB port on the SmartCNX Controller (Figure 56).
3. Press SELECT when USB OPTIONS MENU appears.
4. Press the UP or DOWN arrow to LOAD SW and press SELECT.
5. Press the UP or DOWN arrow to YES and press SELECT.
6. The display shows LOADING SW while the firmware loads. It could take up to 10 minutes to load the firmware.

NOTICE

Do not shut off power. Do not remove the USB or HSP1 communication cable during download. This can cause SmartCNX Controller communication to stop and requires a SmartCNX Controller replacement.

7. The display shows COMPLETE and the controller beeps once when software loading ends.
8. Remove the USB drive.

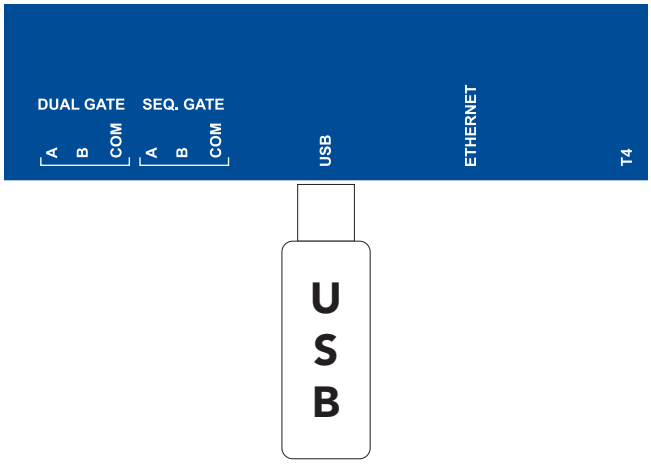

Figure 56. USB Port

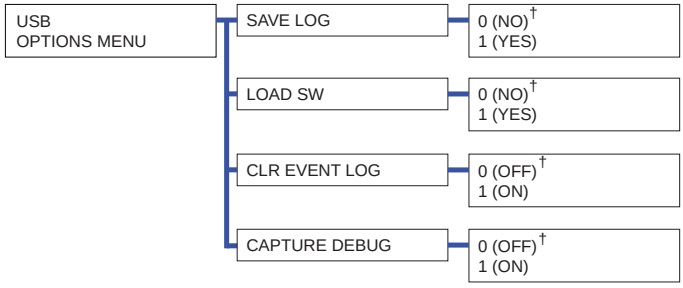

SAVE LOG allows for download of event log to USB to allow for emailing to HySecurity Tech Support.

CAPTURE DEBUG collects useful troubleshooting data when cycling the operator. Data is written to USB as long as USB remains plugged in.

† = Indicates default

Set bluetooth jumper:

1. Set the DC and AC switches to OFF.
2. Remove the rubber plug or OXI receiver from OXI receiver slot (Figure 57).
3. Move the jumper or switch to the ON position. (Left two pins on three pin version or to the left on slide switch, Figure 58)
4. Place the rubber plug in the OXI receiver slot.

Enable bluetooth in the menus:

5. Set the DC and AC Switches to ON.
6. Press MENU on the SmartCNX controller.
7. Press the UP or DOWN arrow to navigate to EXTERNAL COMMUNICATIONS and press SELECT.
8. Press the UP or DOWN arrow to navigate to BLE OPTIONS MENU and press SELECT.
9. Press the UP or DOWN arrow to select 1 (ON) and press SELECT.
10. Press the UP or DOWN arrow to show HYSECURITY GATE PIN and GATE NAME. Record the PIN and GATE NAME.

Connect the app and controller:

11. Open the SmartCNX Installer App. Always keep the app up-to-date.
12. Tap Connect.
13. Tap the name of the appropriate operator.
14. Enter the PIN from step 10.
15. Connect button changes color to green to indicate good connection.

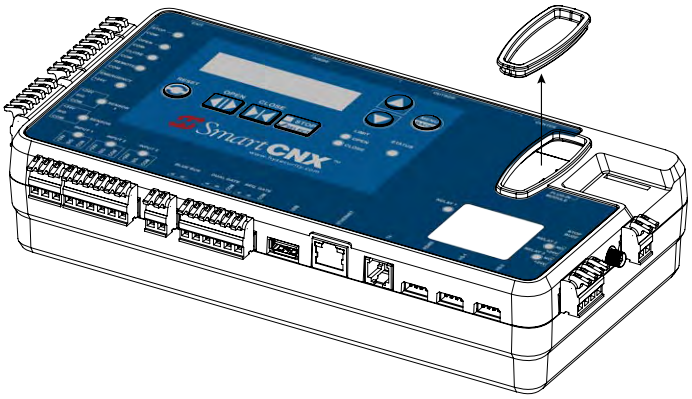

Figure 57. Remove OXI Receiver Cover

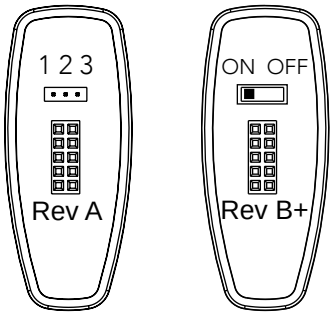

Figure 58. Bluetooth Switch

Figure 59. Bluetooth Enabled Display

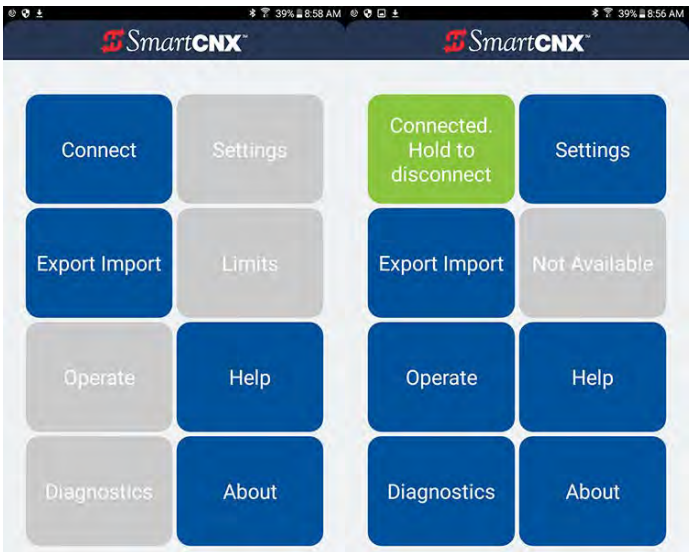

Figure 60. SmartCNX Installer App Connect and Disconnect

Continued from page 76.

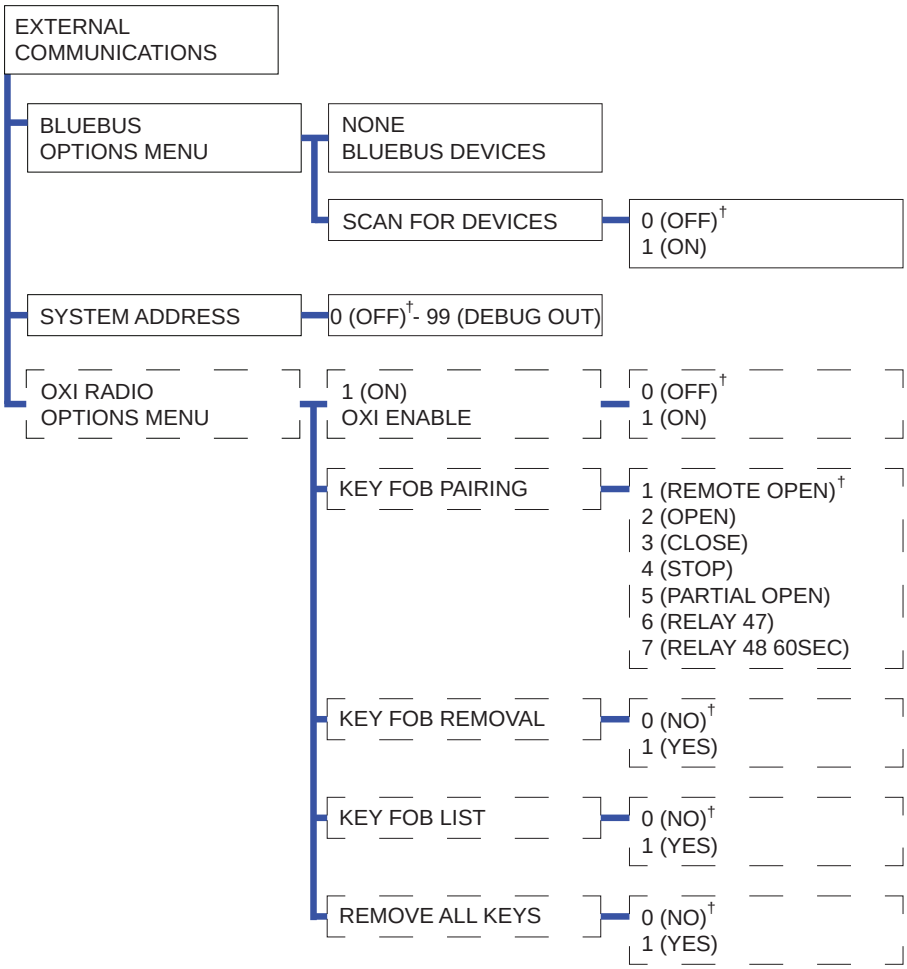

† = Indicates default

Table 17. SmartCNX External Communications Settings		
MENU DISPLAY	**SETTINGS**	**DESCRIPTION**
BLUEBUS OPTIONS MENU		BlueBUS submenu
NONE, BLUEBUS DEVICES		Lists the configurations of the connected BlueBUS devices.
SCAN FOR DEVICES	**0 = OFF** 1 = ON	Change to 1 (ON) to scan for BlueBUS devices. Use this function to install and uninstall BlueBUS device for the firmware to recognize and monitor as an external entrapment sensor(s).
SYSTEM ADDRESS	**0 (OFF)** - 99 (DEBUG OUT)	Set system address for network communication: 0 = no network communication 1 - 99 sets individual polling addresses.
OXI MENU		OXI Submenu, only appears when a receiver is connected to the SmartCNX Controller.
OXI ENABLE	**0 = OFF** 1 = ON	Enables or disables the NICE OXI/A receiver. The rest of the menus only appear when OXI Enable is seet to 1 (ON).
KEY FOB PAIRING	**1 = REMOTE OPEN** 2 = OPEN 3 = CLOSE 4 = STOP 5 = PARTIAL OPEN 6 = RELAY 47 7 = RELAY 48 60SEC	Set the function to assign to a fob/button and then press the fob button to pair it to the SmartCNX Controller.
KEY FOB REMOVAL	**0 = NO** 1 = YES	Set to YES and activate a fob button to remove it from the SmartCNX controller.
KEY FOB LIST	**0 = NO** 1 = YES	Set to YES to use the arrow buttons to scroll through the list of paired fobs. While scrolling through the porgrammed fobs, pressing SELECT on the displayed key fob button will give the option to delete the individual fob.
REMOVE ALL KEYS	**1 = NO** 1 = YES	Set to YES to remove all paired fobs from the SmartCNX Controller.

Note: The button on the OXI receiver is not needed for programing fobs for the SmartCNX and should not be pressed during the following installation processes.

Install and enable the OXI receiver:

1. Remove the OXI port rubber plug.
2. Install the OXI receiver.
3. Install a whip or coaxial antenna into the OXI antenna terminal for better range (Figure 61). Mount any external antenna onto the top of a fixed fence post near the operator.
4. Press MENU on the SmartCNX Controller.
5. Press the UP or DOWN arrow to navigate to EXTERNAL COMMUNICATIONS and press SELECT.
6. Press the UP or DOWN arrow to navigate to OXI RADIO MENU OPTIONS and press SELECT.
7. Press the UP or DOWN arrow to navigate to OXI ENABLE and press SELECT.
8. Press the UP or DOWN arrow to select ON and press SELECT.

Pair a fob:

1. Open OXI RADIO MENU OPTIONS (steps 4 - 6 to install OXI).
2. Press the UP or DOWN arrow to navigate to KEY FOB PAIRING and press SELECT.
3. Press the UP or DOWN arrow to select the function.
4. Press and hold the appropriate button on the fob.
5. Press SELECT. Display will beep and state PAIRED.
6. Repeat steps 2-5 to pair additional fob buttons or fobs.
7. Press MENU until gate status displays.
8. Press the buttons on the fob to test operation.

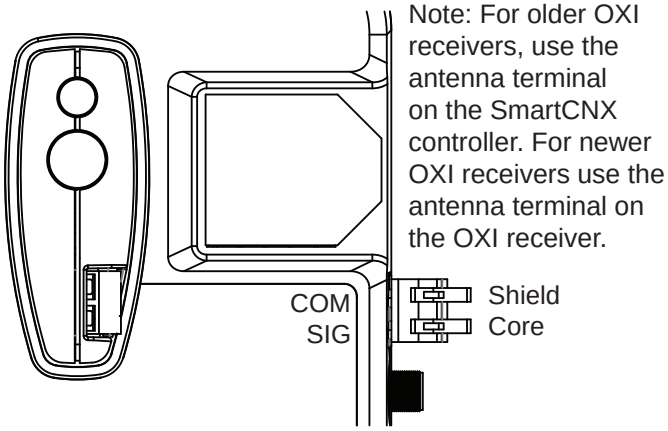

Note: For older OXI receivers, use the antenna terminal on the SmartCNX controller. For newer OXI receivers use the antenna terminal on the OXI receiver.

Figure 61. OXI Antenna Terminal

Remove a single fob in hand:

1. Open OXI RADIO MENU OPTIONS (steps 4 - 6 to install OXI).
2. Press the UP or DOWN arrow to navigate to KEY FOB REMOVAL and press SELECT.
3. Press the UP or DOWN arrow to select 1 (ON).
4. Press and hold the button on the fob and press SELECT to remove.
5. Repeat steps 3 and 4 for every fob button to be removed.

Remove a single fob from a list:

Note: It is important to keep a log of fobs and who is responsible for each for this method.

1. Open OXI RADIO MENU OPTIONS (steps 4 - 6 to install OXI).
2. Press the UP or DOWN arrow to navigate to KEY FOB LIST and press SELECT.
3. Press the UP or DOWN arrow to navigate to the fob number in the list and press SELECT.
4. Press the UP or DOWN arrow to select Y and press SELECT. This removes the fob.

Remove all fobs:

1. Open OXI RADIO MENU OPTIONS (steps 4 - 6 to install OXI).
2. Press the UP or DOWN arrow to navigate to REMOVE ALL KEYS and press SELECT
3. Change the setting to 1 (YES) and press SELECT.

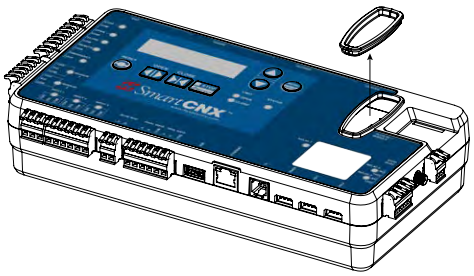

Figure 62. Remove OXI Port Rubber Plug

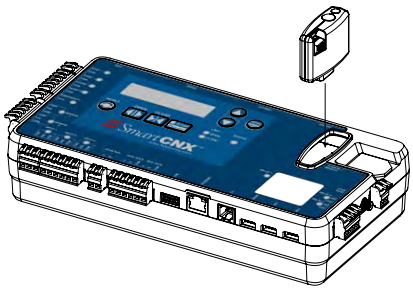

Figure 63. Install OXI Receiver

Page intentionally left blank.

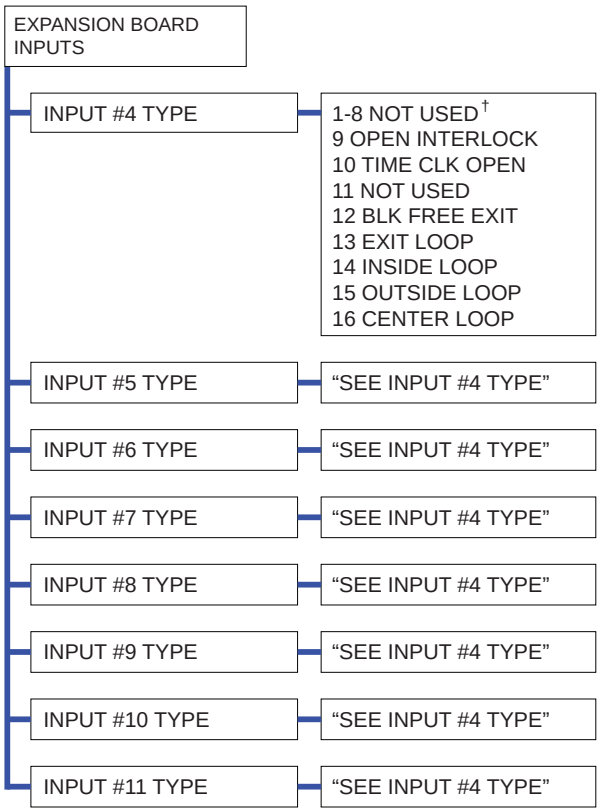

Table 18. SmartCNX Expansion Board Inputs Settings

MENU DISPLAY	SETTINGS	DESCRIPTION
INPUT #4-#11 TYPE	**1 = NOT USED** 2-7= NOT USED 8 = PARTIAL OPEN (SLIDE ONLY) 9 = OPEN INTERLOCK 10 = TIME CLK OPEN 11 = NOT USED 12 = BLK FREE EXIT 13 = EXIT LOOP 14 = INSIDE LOOP 15 = OUTSIDE LOOP 16 = CENTER LOOP	

Note: For expansion board relays see Relay Outputs on page 62.

† = Indicates default

1. Connect the mounting plate to the operator to the right of the controller mounting plate. Make sure that the three screws marked (1) are in position and snug.
2. Connect the I/O expansion module (HS-A) to the SmartCNX Controller (HS-2) with the communication cable (MX4330).
3. Optional step: To use any of the R6 - R11 +24V ports connect power from the drive module. Connect the + port on the drive module to the EXT +24V port on the I/O Expansion Module. Then connect the - port on the drive module to the EXT COM port on the I/O Expansion Module.

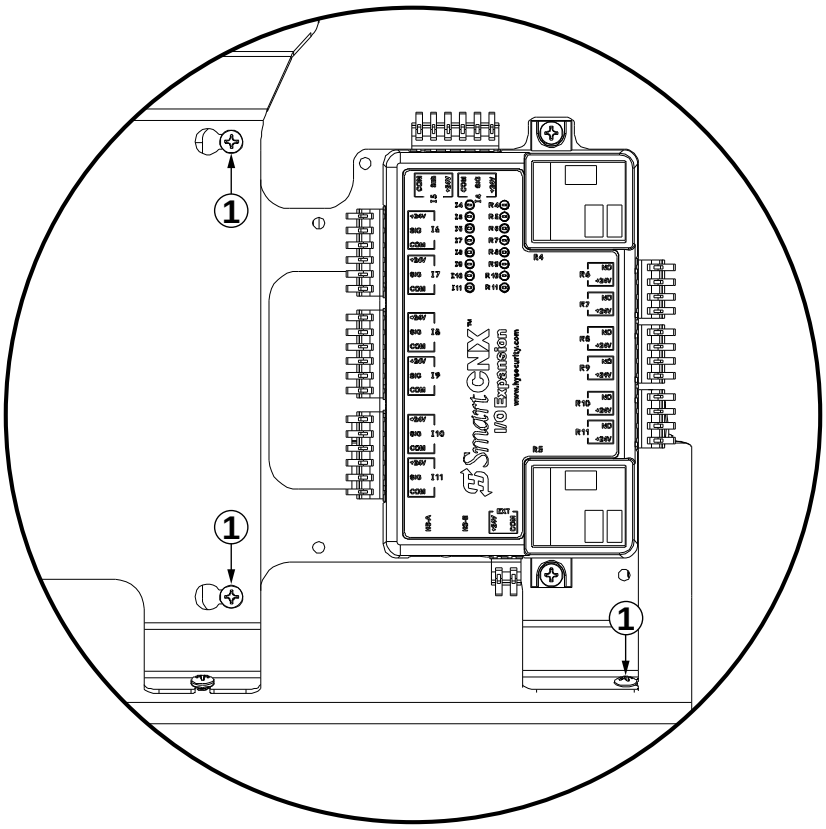

Figure 64. Install the I/O Expansion Module and Mounting Plate

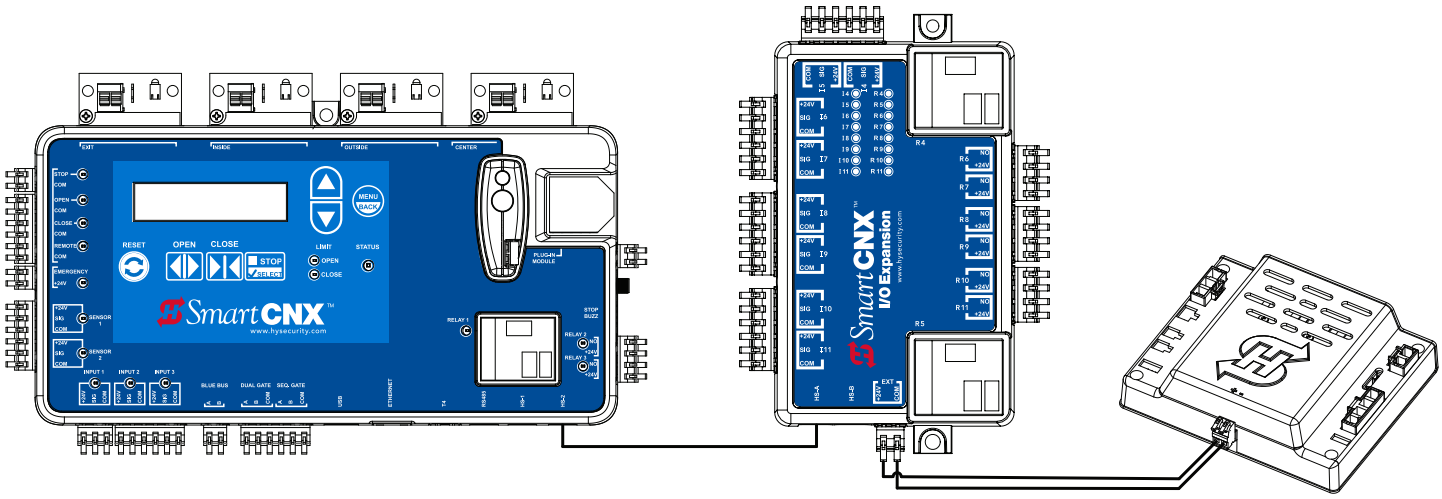

Figure 65. Connect the SmartCNX Controller (HS-2) to the I/O Expansion Module (HS-A). Optionally, connect 24V from the Drive Module to the I/O Expansion Module for 24V.

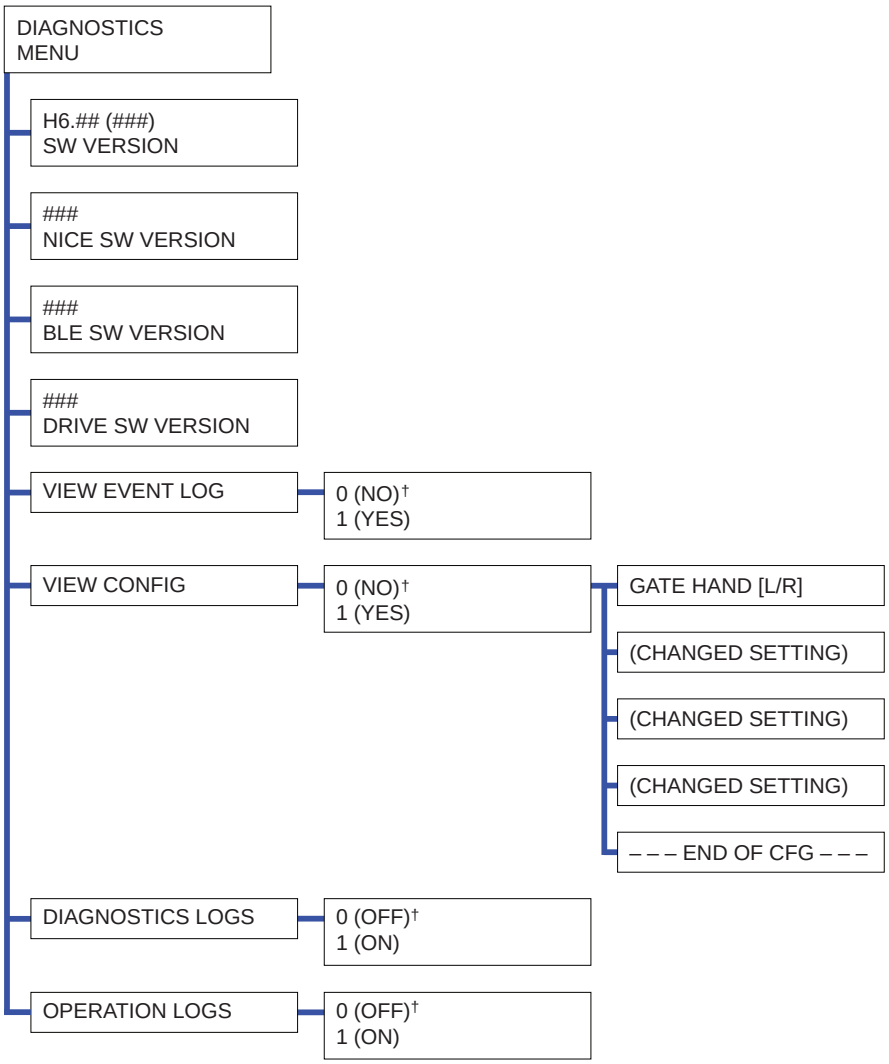

Table 19. SmartCNX Diagnostics Menu Settings		
MENU DISPLAY	**SETTINGS**	**DESCRIPTION**
VIEW EVENT LOG	**0 = NO** 1 = YES	View a list of events in the SmartCNX Controller's memory.
VIEW CONFIG	**0 = NO** 1 = YES	View a list of configuration settings for the operator that are different from the defaults (e.g. gate handing and input settings).
DIAGNOSTICS LOGS	**0 = OFF** 1 = ON	Set to ON to turn on diagnostic logging which logs every aspect of gate operation. Diagnostic logging bogs down the processor and slows response to operate command. Only use when absolutely needed to capture an intermittent issue.
OPERATION LOGS	**0 = OFF** 1 = ON	

Open the Diagnostics Menu to cycle through a status display of the firmware versions of the different processors (CNX controller, Nice, BLE, Drive module, I/O Expansion Module).

† = Indicates default

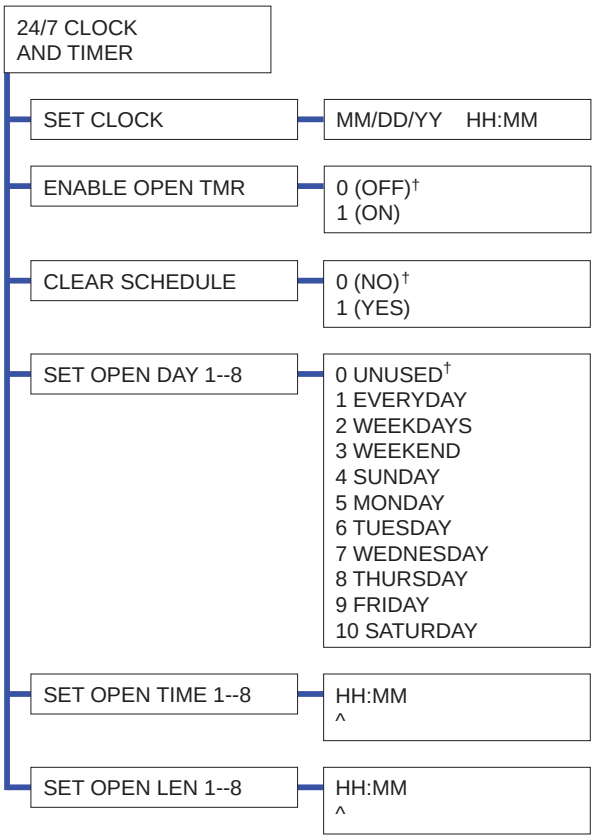

Table 20. SmartCNX 24/7 Clock and Timer Settings

MENU DISPLAY	SETTINGS	DESCRIPTION
SET CLOCK	MM/DD/YY HH:MM ^	Set the date and time. Date and time must be set before open timers can be used.
ENABLE OPEN TIMER	**0 = OFF** 1 = ON	Enable or disable the open timer. When enabled, any open timer that is programmed will hold the gate open at the programmed time for the programmed duration. Additionally, any relay set to option 46 will be activated regardless of the enable open timer setting.
CLEAR SCHEDULE	**0 = NO** 1 = YES	Clear all programmed open timer settings.
SET OPEN DAY 1-8	**0 = UNUSED** 1 = EVERYDAY 2 = WEEKDAYS 3 = WEEKEND 4 = SUNDAY 5 = MONDAY 6 = TUESDAY 7 = WEDNESDAY 8 = THURSDAY 9 = FRIDAY 10 = SATURDAY	Assign day setting to open timer setting 1-8.
SET OPEN TIME 1-8	HH:MM ^	Set the time when the programmed open timer (1-8) turns on the programmed relay or opens the gate.
SET OPEN LENGTH 1-8	HH:MM ^	Set the duration of time that the programmed open timer (1-8) holds the gate open.

† = Indicates default

MECHANICAL MAINTENANCE

The SlideSmart CNX requires minimal mechanical maintenance. Check the following on a routine basis:

- Sweep debris out and away from the chassis.
- Check for signs of rust. If any areas of rust are found, reduce spread of corrosion by treating areas with a rust inhibitor.
- Check for chain wear. Replace if stiff or excessively rusted.
- Check for damage to gate hardware due to gate strikes. Manually push/pull gate from open/close to verify smooth rolling contact. Check the gearbox for leaks.
- Replace worn-out batteries. Refer to "DC Battery Replacement" on page 88.
- Tighten chain if too loose. Make sure that chain sag is less than 1 inch per 10 feet of chain.
- Verify position of target magnet. If not located between idler and sprocket when gate is closed, reposition target magnet and relearn limits.

FUSE REPLACEMENT

A 20A fuse is located next to the battery harness. It requires no maintenance, but if blown due to a power surge, swap it out with a new fuse (Figure 66). ALERT 28 BATT DISCONNECTED indicates a blown fuse or disconnected battery.

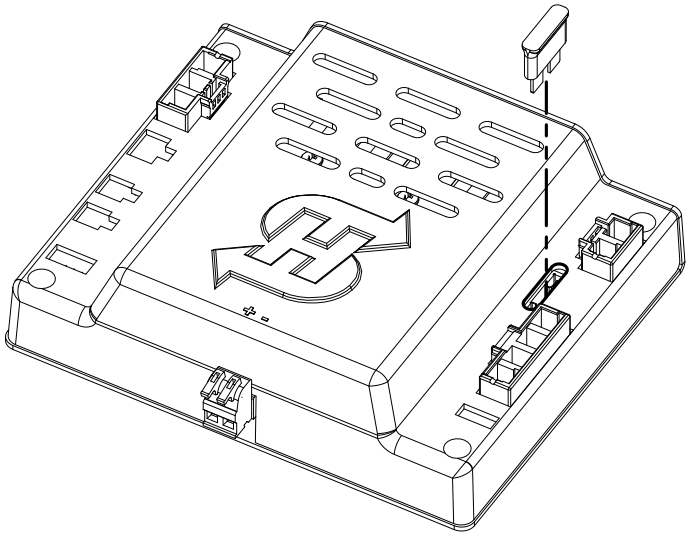

Figure 66. Fuse Replacement

DC BATTERY REPLACEMENT

HySecurity provides a one year warranty from the date of shipment for all batteries supplied with the SlideSmart CNX operator.

Display indicators of a low battery include:

- LOW BATTERY or DEAD BATTERY
- ALERT 18 - CHANGE BATTERY
- ALERT 28 - DISCONNECTED BATTERIES. Gate operation is affected by AC power loss.

The two 8Ah batteries are located on the left hand side of the power shelf behind power shelf cover.

To replace the batteries:

1. Remove the front cover.
2. Set the DC and AC power switches to OFF.
3. Remove the power shelf cover.
4. Cut the zip ties on the batteries.
5. Disconnect the blue jumper wire, disconnect the wire harness, and remove the 8Ah batteries.

Note: Dispose of batteries properly.

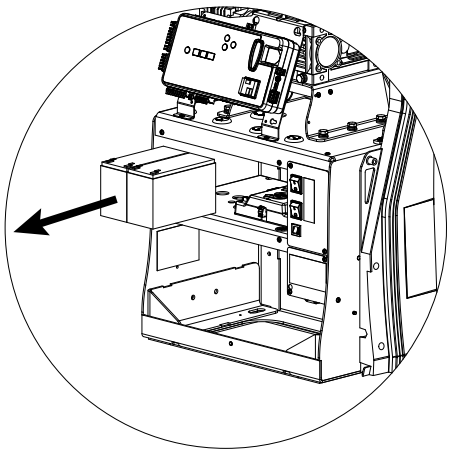

Figure 67. Remove the Batteries

6. Install the new batteries.
7. Connect the red harness wire to the red terminal on left battery.
8. Connect the blue harness wire to the black terminal on the right battery.
9. Connect the blue jumper wire between the batteries.
10. Set the DC and AC switches to ON and replace the front cover.

ELECTRICAL SAFETY

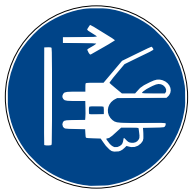

- Turn gate operator and all circuit breakers OFF before performing maintenance on the gate operator or making contact with output receptacles.

- Never insert any objects into output receptacles during operation. The possibility exists of electrical shock, electrocution, or death.
- Never let power wires lay in water.
- Never use damaged or worn wire when connecting equipment. Inspect for cuts in the insulation.

- Never grab or touch a live power cord or cable with wet hands. The possibility exists of electrical shock, electrocution or death.
- Always make certain that proper power has been selected for the job. See Cable Selection Chart in this manual.

GROUNDING SAFETY

- Always make sure that electrical circuits are properly grounded to a suitable earth ground (ground rod) per the National Electrical Code (NEC) and local codes. Severe injury or death by electrocution can result from operating an ungrounded operator.
- Never use gas piping as an electrical ground.

BATTERY SAFETY

HySecurity CNX operators use sealed Absorbed Glass Mat (AGM) batteries and HySecurity highly recommends replacing used batteries with new AGM-type batteries.

CAUTION

Batteries used with HySecurity gate operator contain materials considered hazardous to environment. Proper battery disposal is required by federal law. Refer to Hazardous Waste Regulations federal guidelines.

To reduce risk of fire or injury to persons:

- Observe polarity between batteries and charging circuit.
- Never mix battery sizes, types, or brands. Charging circuit on HySecurity DC operators is designed for AGM-type batteries, not flooded lead acid-type batteries.

- Exercise care in handling batteries. Be aware metal found in rings, bracelets, and keys can conduct electricity, short batteries, and cause potential injury.

- Do not open or mutilate batteries. Battery cells contain corrosive materials which may cause burns and other injuries. Material within batteries is toxic.

- Always dispose of batteries properly. Do not place batteries in fire. Battery cells may explode. Follow federal guidelines for proper disposal of hazardous waste.
- Always keep battery cables in good working condition. Repair or replace all worn cables.

- Replace batteries according to instructions found in DC Battery Replacement.
- Do not charge frozen battery. Battery can explode. If frozen, warm the battery to at least 61°F (16°C).

ENVIRONMENTAL SAFETY/ HAZARDOUS MATERIALS AND PROPER DISPOSAL

Decommissioning is a controlled process used to safely retire a piece of equipment that is no longer serviceable. If the equipment poses an unacceptable and unrepairable safety risk due to wear or damage or is no longer cost effective to maintain (beyond life-cycle reliability) and is to be decommissioned (demolition and dismantlement), be sure to follow rules below.

- Do not pour waste or oil directly onto the ground, down a drain or into any water source.
- Contact your country's Department of Public Works or recycling agency in your area and arrange for proper disposal of any electrical components, waste or oil associated with this equipment.
- When the life cycle of this equipment is over, remove battery and bring to appropriate facility for lead reclamation. Use safety precautions when handling batteries that contain sulfuric acid.
- When the life cycle of this equipment is over, it is recommended that the frame and all other metal and plastic parts be sent to a recycling center.

Metal and plastic recycling involves the collection of metal and plastic from discarded products and its transformation into raw materials to use in manufacturing a new product.

Recyclers and manufacturers alike promote the process of recycling metal and plastic. Using a metal and plastic recycling center promotes energy cost savings.

Table 21. SmartCNX Controller - Troubleshooting

Display Condition	Description Alert, Error or Fault	Possible Causes	Solutions
SAFE MODE	Safe Mode Alert	Occurs when an edge sensor or Inherent Entrapment Sensor (IES) trips. Gate binding, wind, or a faulty edge sensor can cause a false alert. All inputs are still functional during safe mode, but Close Timer is disabled until an operate command is received.	1. Activate any operate command. 2. Remove obstruction. 3. Correct gate hardware. 4. Correct faulty edge sensor. 5. Adjust IES sensitivity.
ENTRAPMENT MODE	Entrapment Mode Alert	Occurs when IES is tripped when gate is already in Safe Mode (two IES trips in one cycle). Operator will not function until it is reset, which can occur by: ● An Open or Stop command from a push-button control ● Pressing STOP button on operator side ● Pressing RESET button below display Gate binding, wind, or a faulty edge sensor can cause a false alert. Emergency Close or Fire Open input activation will also stop the gate in Entrapment Mode.	Refer to solutions above.
NO AC POWER	No AC Input Power Advisory only.	AC power is shut off at source (breaker) or is not connected. AC power switch on operator (lower rocker switch) is turned off, or circuit breaker on the operator has tripped. Bad power supply. Power supply selector switch is in the wrong position. May appear on a solar powered operator when there is not enough power output from the panel.	1. Verify Voltage Selector switch is set for the supplied voltage. 2. Set AC switch to On. 3. Reset operator circuit breaker or reset circuit breaker at electrical panel. 4. Verify AC power to operator. Have a licensed electrician check wiring. 5. Check power supply output is 36VDC.
LOADING SW	Software is being loaded into SmartCNX Controller.	Software is currently being loaded. Display will show which specific processor firmware is loading.	Wait for software to finish loading.

Table 21. SmartCNX Controller - Troubleshooting

Display Condition	Description Alert, Error or Fault	Possible Causes	Solutions
LOW 24VDC	Low 24VDC UPS Batteries Advisory only.	Occurs when battery voltage has dropped to less than 22V. At this level, batteries have about 20% charge. Normal function until 21V. ● No AC Power. ● Wiring / Connector problem ● Drive module charger failure ● Power supply failure	1. Verify AC power. 2. Check all connections. Clean or repair as required. 3. Check battery condition and replace as required. 4. Check charger voltage is 27VDC at red/blue battery wires. Replace drive controller. 5. Verify power supply voltage of 36VDC and replace as required.
DEAD BATTERY	Extremely low UPS batteries – no automatic operation - batteries below 21V.	Occurs when battery voltage has dropped to less than 21V. At this level, batteries have about 10% charge. Gate will automatically open or close depending upon setting chosen. No additional automatic function is possible, but limited push button control is available down to 18V.	Refer to solutions above.
HYSECURITY BAD POWER	Critically low 24V supply power. This message can occur only on initial start up if power is critically low.	DC power is below 14V – no control functions will be allowed at all.	Refer to solutions above.
No display, LED blinking	SmartCNX Controller is receiving power, but battery voltage is very low.	Several possible causes: ● AC power has been shut off from the operator for too long and the batteries are drained. ● Wiring problem. ● Batteries no longer hold a charge. ● Bad SmartCNX Controller. ● Bad power supply or drive module. ● Disconnected com (HSP) wire between SmartCNX controller and drive module.	Refer to solutions above.

Table 22. SmartCNX Controller - Alerts

Display Condition	Description Alert, Error or Fault	Possible Causes	Solutions
ALERT 1 FORCE OPEN	Gate forced open. Alarm will sound.	Gate has been forced off the full close limit and is being prevented from re-closing.	Will self-clear after an open or close input.
ALERT 2 DRIFT CLOSED	Gate drifted closed.	Gate has drifted off the full open limit and is being prevented from re-opening.	Will self-clear after an open or close input.
ALERT 3 EXCESS DRIFT	Gate drift in transit - Advisory only	Alert appears if gate drifts three times in a five minute period.	Check track to make sure it is level.
ALERT 4 MOTOR OVERLOAD	Thermal overload alert. When alert is triggered, gate can only “fully open” until alert is cleared.	Motor drive heat sink exceeds 195°F. Alert temporarily disables operator, but automatically resets itself when it cools down. May also occur if the heatsink temperature is 70°F higher than ambient temperature.	Check gate hardware. Alert automatically clears when temperature drops below threshold.
ALERT 5 BOTH LIM ACTIVE (Swing only)	Both limit sensors are on at the same time	• Short in wiring or drive module connection • Failed limit sensor	• Repair any wiring issues. • Check limit sensors and replace as required.
ALERT 6 LIM NOT RELEASED (Swing only)	The limit did not release when the operator was commanded to move.	• Loose taper clamp. • Arm assembly binding. • Bad limit switch	• Tighten taper clamp • Check limit sensors and replace as required • Verify arm condition
ALERT 7 FREQ SHIFT FAULT*	Hy5B detects a frequency change outside normal range.	Likely causes are poor integrity of loops or metallic objects within range.	Check lead and roadway loop wires for problems. Replace if necessary.
ALERT 8 LOOP SHORTED*	Hy5B detects a loop shorted to ground.	Caused by inadequate insulation of loop wires.	Refer to solution above.
ALERT 9 LOOP OPEN*	Hy5B detects a lack of continuity in loop wire.	Caused by broken loop wire or wire has come unplugged from detector.	Refer to solution above.
ALERT 10 I2C BUS ERROR*	Communication error detected to a Hy5B vehicle detector.	Caused by removal of Hy5B or lack of integrity of socket connection.	Remove and re-install the Hy5B and press RESET. Replace Hy5B, if necessary.
ALERT 11 DETECTOR FAULT*	A problem detected within an Hy5B vehicle detector.	Caused by a fault within Hy5B.	Remove and re-install the Hy5B and press RESET. Replace Hy5B, if necessary.

* This message will also indicate which detector the alert applies to: Exit Loop (ELD), Inside Obstruction Loop (IOLD), Outside Obstruction Loop (OOLD), or Center Loop (CLD).

Table 22. SmartCNX Controller - Alerts			
Display Condition	**Description Alert, Error or Fault**	**Possible Causes**	**Solutions**
ALERT 12 ON TOO LONG*	An input loop (Hy5B or box detector output) is active for more than 5 minutes.	Caused when SmartCNX Controller sees an active loop for more than 5 minutes. “Active” loop can be actual or false.	Check traffic patterns at site. Loop and lead in wires should be checked for problems or replaced.
ALERT 13 STIFF GATE	A gate takes more power to move over time.	Caused by degrading gate hardware or debris in track. This alert appears in history log. It does not have any effect with regard to opening or closing gate.	Check and correct gate hardware as required.
ALERT 14 STUCK GATE	The gate cannot move at all.	Caused by broken gate hardware or ice/ snow buildup.	Check and correct gate hardware as required. Clear ice and snow.
ALERT 15 NO TARGET (SLIDE ONLY)	Target magnet is missing or is not detected.	Target magnet fell off or target sensor wires are damaged. Target may not be installed correctly or gate has not closed fully since the target was installed.	1. Make sure target is properly fastened. 2. Check target sensor to make sure it is reading magnet. 3. Change sensor if it or its wires are damaged.
ALERT 18 CHANGE BATTERY	24VDC UPS batteries need to be replaced. Buzzer will chirp every minute until UPS batteries are replaced.	Batteries are not taking a charge properly.	Replace the 24VDC UPS batteries
ALERT 22 INTLOCK FAILURE	Interlock/Sequential Gate communication lost. Alert auto clears when communication between two operators is restored.	• Appears when communication connection is lost for more than 5 seconds between interlocked or sequenced gate operators. • Solo operator has Sequential gate set to ON.	1. Check cable connections and wiring. Make sure both operators are working properly with same, current software versions. 2. Verify Dual Gate and Sequential Gate are both set to (0) on a solo operator.
ALERT 28 BATTERY DISCONNECTED	Battery disconnected from drive module.	Dead or disconnected batteries detected by SmartCNX Controller. Operator may still function on AC power but will not have battery backup. Battery fuse may be blown.	Replace or reconnect batteries. Replace fuse if needed.

* This message will also indicate which detector the alert applies to: Exit Loop (ELD), Inside Obstruction Loop (IOLD), Outside Obstruction Loop (OOLD), or Center Loop (CLD).

Table 23. SmartCNX Controller - Faults

Display Condition	Description Alert, Error or Fault	Possible Causes	Solutions
FAULT 1 MOTOR RUN TIME (SWING ONLY)	The motor is on longer than the maximum run time selected.	• Taper clamp slipping • Missing target or bad limit sensor	1. Tighten taper clamp. 2. Check limit sensors. Replace as required. 3. Increase Max Run Timer.
FAULT 2 PHOTO EYE	Photo eye is missing or not working.	This fault can only occur if monitored sensor check fails.	Correct malfunctioning photo eye.
FAULT 4 GATE NO LOAD	SmartCNX Controller detects no load on operator. Gate is non-operational while this fault is triggered.	• Motor wires disconnected. • DC switch off. • Drive board may be bad. • Motor may be damaged or faulty.	1. Check DC motor wires condition and connection to drive module. 2. Turn DC power switch on. 3. Press RESET to clear fault.
FAULT 14 STUCK GATE	SmartCNX Controller could not overcome stuck gate after 3 attempts. Gate is non-operational while this fault is triggered.	Caused by broken gate hardware or ice/ snow buildup. No movement was detected by motor encoder	1. Check and correct gate hardware as required. 2. Press RESET to clear fault. 3. Make sure that motor wires are connected.

Table 24. SmartCNX Controller - Errors

Display Condition	Description Alert, Error or Fault	Possible Causes	Solutions
ERROR 1 DIRECTION ERROR	SmartCNX Controller detects operator ran in wrong direction.	Limit sensor plugs switched on drive module.	1. Switch limit sensor plugs or reset operator handing Left Hand/ Right Hand. 2. Press RESET to clear fault.
ERROR 3 Hy5B FAILED*	SmartCNX Controller detects communication error with a Hy5B vehicle detector.	Caused by Hy5B removal or socket connection integrity.	1. Press RESET. 2. Remove and re-install Hy5B. 3. Replace Hy5B, if needed.
ERROR 4 PRIMARY-SECONDARY COM	SmartCNX Controller detects a communication error between primary and secondary in a dual gate installation.	Several possible causes: ● Primary/Secondary communication cable is installed incorrectly. ● Primary/Secondary not configured properly through Installer Menu. ● Operator is not properly earth grounded. ● Primary/Secondary communication cable installed in same conduit as high-voltage AC power. ● One operator is powered off. ● Different software versions between operators. Check software version currently loaded in operator by pressing RESET.	1. Correct communication cable. 2. Verify one operator as is set as Primary and the other is set as Secondary. 3. Install ground rod per NEC/NFPA standard. 4. Install communication cables in a low voltage conduit. 5. Ensure AC power is present at both operators and all power switches are On. 6. Make sure both operators are running same software version.
ERROR 5 No display	Display is blank, but the error appears in the log and means that SmartCNX Controller detects a serious internal error.	Internal software/hardware error. Report any instance of this error to HySecurity Technical Support.	1. Set AD & DC switches to OFF and then to ON. 2. Set AD & DC switches to OFF to reset software. 3. Update to latest software version. 4. Replace SmartCNX Controller.

* This message will also indicate which detector the alert applies to: Exit Loop (ELD), Inside Obstruction Loop (IOLD), Outside Obstruction Loop (OOLD), or Center Loop (CLD).

Table 24. SmartCNX Controller - Errors			
Display Condition	**Description Alert, Error or Fault**	**Possible Causes**	**Solutions**
ERROR 6 DRIVE BOARD COMM	Indicates communication failure between drive module and SmartCNX Controller.	Drive module communication is bad or the drive module may be bad.	1. Verify connection between SmartCNX Controller and drive module (HSP1). 2. Replace drive module.
ERROR 7 MENU CHECKSUM	Software issue exists that may require factory reset.	Corrupt software or data.	Call HySecurity Technical Support for assistance.
ERROR 8 RPM SENSOR	RPM sensor disconnected.	Motor Encoder or wires are damaged or unplugged.	Check wiring from motor to drive module.
ERROR 9 BATTERY DISCONNECT	SmartCNX Controller detects no battery connected.	Batteries are disconnected, or a wiring fault exists. Only appears when the batteries are disconnected and the only input power is solar panels.	1. Connect battery harness to drive module. 2. Correct any issues with battery wiring. 3. Check 20 amp fuse on drive module.

FRENCH TRANSLATIONS

The following French translations provided below are found in the Safety Section located at the beginning of the manual.

English	French
IMPORTANT SAFETY INSTRUCTIONS WARNING – To reduce the risk of injury or death:	INSTRUCTIONS DE SÉCURITÉ IMPORTANTES AVERTISSEMENT – Pour réduire les risques de blessures et de mort :
1. READ AND FOLLOW ALL INSTRUCTIONS.	1. LISEZ CETTE NOTICE ET CONFORMEZ-VOUS AUX MISES EN GARDE
2. Never let children operate or play with gate controls. Keep the remote control away from children.	2. Ne laissez jamais les enfants manoeuvrer les commandes de la barrière ou jouer avec celles-ci. Laissez la télécommande hors de la portée des enfants.
3. Always keep people and objects away from the gate. NO ONE SHOULD CROSS THE PATH OF THE MOVING GATE.	3. Tenez toujours à l'écart de la barrière toute personne ou tout objet avoisinant. IL NE FAUT JAMAIS PASSER DANS LA TRAJECTOIRE D'UNE BARRIÈRE EN MOUVEMENT.
4. Test the gate operator monthly. The gate MUST reverse on contact with a rigid object or stop when an object activates the non-contact sensors. After adjusting the force or the limit of travel, retest the gate operator. Failure to adjust and retest the gate operator properly can increase the risk of injury or death.	4. Vérifiez le fonctionnement de l'ouvre-barrière une fois par mois. Le sens de la course DOIT s'inverser lorsque la barrière entre en contact avec un objet dur ou la barrière DOIT s'arrêter lorsqu'un objet active les capteurs sans contact. Vérifiez à nouveau l'ouvre-barrière après tout réglage de la force de déclenchement ou du seuil de fin de course. Un réglage incorrect de l'ouvre-barrière ou l'omission de vérifier à nouveau le fonctionnement de l'ouvre-barrière peut causer des blessures, voire la mort.
5. Use the emergency release only when the gate is not moving.	5. Ne déclenchez le dispositif de désaccouplement d'urgence que lorsque la barrière ne bouge pas.
6. KEEP GATES PROPERLY MAINTAINED. Read the user's manual. Have a qualified service person make repairs to gate hardware.	6. ASSUREZ-VOUS QUE LA BARRIÈRE EST CORRECTEMENT ENTRETENUE. Lisez le manuel de l'utilisateur. Confiez la réparation du matériel de la barrière à un technicien qualifié.
7. The entrance is for vehicles only. Pedestrians must use separate entrance.	7. La voie d'accès est réservée aux véhicules seulement. Les piétons doivent utiliser une voie d'accès différente.
8. SAVE THESE INSTRUCTIONS.	8. CONSERVEZ CES INSTRUCTIONS.

English	French
2.3 Install the gate operator only when:	2.3 N'installez l'ouvre-barrière que si :
a. The operator is appropriate for the construction of the gate and the usage Class of the gate,	a. l'ouvre-barrière est approprié pour la structure et la classe d'utilisation de la barrière;
b. All openings of a horizontal slide gate are guarded or screened from the bottom of the gate to a minimum of 1.83 m (6 ft) above the ground to prevent a 57.2 mm (2-1/4 inch) diameter sphere from passing through the openings anywhere in the gate, and in that portion of the adjacent fence that the gate covers in the open position,	toutes les ouvertures de la barrière coulissante sont protégées ou grillagées du bas de la porte jusqu'à un minimum de 1,83 m (6 pi) du sol si bien qu'une sphère de 57,2 mm (2 1/4 po) de diamètre ne peut passer par une ouverture au niveau de la barrière et de la portion de la clôture adjacente que la barrière couvre en position ouverte;
c. All exposed pinch points are eliminated or guarded, and	c. tous les points de pincement sont éliminés ou protégés;
d. Guarding is supplied for exposed rollers.	d. des protections sont fournies pour les galets exposés.
2.4 The operator is intended for installation only on gates used for vehicles. Pedestrians must be supplied with a separate access opening. The pedestrian access opening shall be designed to promote pedestrian usage. Locate the gate such that persons will not come in contact with the vehicular gate during the entire path of travel of the vehicular gate.	2.4 L'ouvre-barrière est destiné à n'être installé que sur des barrières utilisées pour les véhicules. Il faut fournir une autre voie d'accès aux piétons. La voie d'accès pour les piétons doit être conçue pour favoriser le passage des piétons. Placez la barrière de sorte que personne ne puisse entrer en contact avec la barrière pour les véhicules sur l'ensemble de sa trajectoire
2.5 The gate must be installed in a location so that enough clearance is supplied between the gate and adjacent structures when opening and closing to reduce the risk of entrapment. Swinging gates shall not open into public access areas.	c) Pour réduire les risques de coincement lors de l'ouverture et de la fermeture, la barrière doit être installée dans un endroit où la barrière et les structures avoisinantes sont suffisamment éloignées l'une de l'autre. Les barrières battantes ne doivent pas ouvrir dans une zone d'accès public.

English	French
2.6 The gate must be properly installed and work freely in both directions prior to the installation of the gate operator. Do not over-tighten the operator clutch or pressure relief valve to compensate for a damaged gate.	2.6 La barrière doit être bien installée et fonctionner librement dans les deux directions avant d'entreprendre l'installation de l'ouvre-barrière. Ne serrez pas trop l'embrayage ou la soupape de surpression de l'ouvre-barrière pour compenser une barrière endommagée.
2.7 Controls intended for user activation must be located at least 1.83 m (6 ft) away from any moving part of the gate and where the user is prevented from reaching over, under, around or through the gate to operate the controls. Exception: Emergency access controls only accessible by authorized personnel (e.g. fire, police, EMS) may be placed at any location in the line-of-sight of the gate.	2.7 Les commandes destinées à l'activation par l'utilisateur doivent être situées à au moins 1,83 m (6 pi) des pièces mobiles de la barrière et à un endroit où l'utilisateur ne peut pas atteindre les commandes par le dessus, par le dessous, par les côtés et au travers de la barrière. Exception : Les commandes d'accès d'urgence accessibles au personnel autorisé seulement (p. ex. pompier, policier, SMU) peuvent être placées à tout endroit dans le champ de visibilité de la barrière.
2.8 The Stop and/or Reset button must be located in the line of-sight of the gate. Activation of the reset control shall not cause the operator to start.	2.8 Le bouton d'arrêt, le bouton de réenclenchement ou ces deux boutons doivent être situés dans le champ de visibilité de la barrière. L'activation des commandes de réenclenchement ne doit pas mettre en marche l'ouvrebarrière.
2.9 A minimum of two (2) WARNING SIGNS shall be installed, in the area of the gate. Each placard is to be visible by persons located on the side of the gate on which the placard is installed.	2.9 Au moins deux panneaux de mise en garde doivent être installés dans la zone de la barrière. Chaque étiquette doit être visible des personnes situées de chaque côté de la barrière sur laquelle l'étiquette est installée.
2.10 For gate operators utilizing a non-contact sensor	2.10 Pour les ouvre-barrières qui fonctionnent avec des capteurs
a. See instructions on the placement of non-contact sensors for each Type of application,	a. Voir les instructions sur le positionnement des capteurs sans contact pour chaque type d'utilisation.
b. Care shall be exercised to reduce the risk of nuisance tripping, such as when a vehicle, trips the sensor while the gate is still moving, and	b. Des précautions doivent être prises pour réduire les risques de déclenchement inutile, comme lorsqu'un véhicule déclenche le capteur alors que la barrière est encore en mouvement.
c. One or more non-contact sensors shall be located where the risk of entrapment or obstruction exists, such as the perimeter reachable by a moving gate or barrier.	c. Un capteur sans contact ou plus doit être situé où il existe un risque de coincement ou d'obstruction, comme dans l'espace que peut occuper la barrière lorsqu'elle est en mouvement.
2.11 For a gate operator utilizing a contact sensor	2.11 Pour les ouvre-barrières qui fonctionnent avec des capteurs

English	French
a. One or more contact sensors shall be located where the risk of entrapment or obstruction exists, such as at the leading edge, trailing edge, and postmounted both inside and outside of a vehicular horizontal slide gate.	a. Au moins un capteur de contact doit être situé où il existe un risque de coincement ou d'obstruction, comme sur le bord d'ouverture, sur le bord de fermeture et sur les poteaux montés sur l'intérieur ou l'extérieur d'une barrière coulissante pour véhicules.
b. A hardwired contact sensor shall be located and its wiring arranged so that the communication between the sensor and the gate operator is not subjected to mechanical damage.	b. Un capteur de contact doit être installé et câblé de sorte à éviter que la communication entre le capteur et l'ouvrebarrière soit gênée par des dommages mécaniques.
c. A wireless device such as one that transmits radio frequency (RF) signals to the gate operator for entrapment protection functions shall be located where the transmission of the signals are not obstructed or impeded by building structures, natural landscaping or similar obstruction. A wireless device shall function under the intended end-use conditions.	c. Un dispositif sans fil, comme un appareil qui transmet des signaux de radiofréquence (RF) à l'ouvre-barrière pour prévenir le coincement, doit être situé à un endroit où la transmission des signaux ne sera pas obstruée ou gênée par des structures, des arbres ou d'autres obstacles similaires. Un dispositif sans fil doit fonctionner selon les conditions d'utilisation finale prévues.
d. One or more contact sensors shall be located on the inside and outside leading edge of a swing gate. Additionally, if the bottom edge of a swing gate is greater than 152 mm (6 inches) but less than 406 mm (16 inches) above the ground at any point in its arc of travel, one or more contact sensors shall be located on the bottom edge.	d. Au moins un capteur de contact doit être situé sur les bords d'ouverture intérieur et extérieur d'une barrière battante. De plus, si le dessous d'une barrière battante est situé à plus de 152 mm (6 po) mais à moins de 406 mm (16 po) du sol à l'un des points de sa trajectoire, au moins un capteur de contact doit être situé sur le bord inférieur.

Page intentionally left blank.

1. Warranty.

Hy-Security Gate, Inc. ("HySecurity") warrants that at the time of sale each HySecurity-branded product that it sells will, in all material respects, conform to its then applicable specification and will be free from defects in material and manufacture.

The following additional durational warranties apply to HySecurity products, depending on whether (1) the product is purchased through an authorized HySecurity distributor and (2) whether a timely and complete product registration is submitted to HySecurity.

It is therefore important that you register your product with HySecurity, online at www.hysecurity.com/warranty, within the 60-day period described below.

1(a) HySecurity Products Purchased Through Authorized Distributors and Properly Registered

For any gate operator product that is purchased from an authorized HySecurity distributor (this excludes product purchased through internet resellers or any distributor not authorized by HySecurity), if the product registration is completed by the Dealer/Installer or End User within 60 days of the date of purchase, the following warranty terms will apply. HySecurity warrants that the product will remain serviceable for the following periods:

a) Hydraulic industrial gate operator hydraulics, controls, and mechanical components: Five Years or 500,000 gate cycles (whichever occurs first) after the date of installation,
b) Hydraulic wedge operator hydraulics and controls: Five Years or 500,000 cycles (whichever occurs first) after the date of installation. Wedge mechanical components: Two Years after the date of installation,
c) Electromechanical pad-mounted Slide and Swing operators: Five Years or 500,000 cycles (whichever occurs first) after the date of installation, except single family residential usage, where the warranty term shall be Seven Years after the date the product was shipped from HySecurity,
d) Electromechanical linear actuator Swing operators: Two Years after the date of installation,
e) Electromechanical surface mount wedge operator electronics: Two Years or 500,000 gate cycles (whichever occurs first), after the date of installation,
f) Electromechanical Barrier Arm Operators: Two years or 1,000,000 gate cycles (whichever occurs first) after the date of installation,

provided that the preceding Five Year warranty period in (a), (b), and (c) will not extend beyond seven years from the date that the product was shipped from HySecurity, and the Two Year warranty period in (b), (d), (e), and (f) will not extend beyond four years from the date that the product was shipped from HySecurity.

The preceding warranty durations do not apply to the products or components described below (g-j), which have a shorter warranty period:

g) Hydraulic gate operator drive wheels, including XtremeDrive™ wheels and rack: Two Years from date of installation.
h) AC and DC power supplies, chargers, and inverters and HyNet™ Gateway: Two Years from date of installation, except batteries.
i) Batteries: One Year from date of shipment from HySecurity.
j) Components subject to normal wear including, but not limited to, chains, belts, idler wheels, sprockets and fuses: One Year from date of installation.

1(b) HySecurity Products *Not* Purchased Through an Authorized Distributor or Not Properly Registered within 60 Days

For any product that is not purchased from an authorized HySecurity distributor or for which the product registration was not completed by the Dealer/Installer/End User within sixty (60) days of the date of purchase, the following warranty will apply: HySecurity warrants that the product will remain serviceable for the following periods, which begin on the date that the product was shipped from HySecurity:

a) All gate operators: One Year or 100,000 gate cycles, whichever comes first.
b) AC and DC power supplies, chargers, or inverters: One Year.
c) HyNet™ Gateway: One Year.
d) Hydraulic gate operator drive wheels: One Year.

1(c) Replacement Parts

HySecurity warrants that replacement parts (whether new or reconditioned) will remain serviceable for One Year from the date that the part was shipped from HySecurity or the remaining period of the Gate Operator warranty, whichever is longer.

1(d) Limitations and Exclusions Applicable to Each of the Preceding Warranties.

The preceding warranties shall not apply to equipment that has been (1) installed, maintained, or used improperly or contrary to instructions; (2) subjected to negligence, accident, vandalism, or damaged by severe weather, wind, flood, fire, terrorism or war; or (3) damaged through improper operation, maintenance, storage or abnormal or extraordinary use or abuse. Any modification made to products will void the warranty unless the modifications are approved in writing by HySecurity in advance of the change (this exclusion does not apply to normal installation of approved accessories and/or protective devices or sensors). It is the responsibility of the Distributor, Dealer/Installer, or End User to ensure that the software version in the product is maintained to the latest revision level.

The preceding warranties do not extend to accessories when those items carry another manufacturer's name plate and they are not a part of the base model. HySecurity disclaims all warranties for such accessory components, which carry only the original warranty, if any, of their original manufacturer. HySecurity hereby assigns its rights under such manufacturer warranties—to the extent that such rights are assignable—to Buyer.

These warranties extend to HySecurity's Distributors, to the Dealer/Installer, and to the first End User of the product following installation. They do not extend to subsequent purchasers.

2. Exclusion of Other Warranties.

The warranties contained in Section 1 are the exclusive warranties given by HySecurity and supersede any prior, contrary or additional representations, whether oral or written. Any prior or extrinsic representations or agreements are discharged or nullified. HYSECURITY HEREBY DISCLAIMS AND EXCLUDES ALL OTHER WARRANTIES—WHETHER EXPRESS, IMPLIED, OR STATUTORY—INCLUDING ANY **WARRANTY OF MERCHANTABILITY**, ANY **WARRANTY OF FITNESS FOR A PARTICULAR PURPOSE**, ANY LIABILITY FOR INFRINGEMENT, AND ANY WARRANTIES OTHERWISE ARISING FROM COURSE OF DEALING, COURSE OF PERFORMANCE, OR USAGE OF TRADE.

3. Buyer's Exclusive Remedies for Any Nonconformity.

If a HySecurity product fails to conform to the warranties in Section 1, Buyer must notify and order replacement parts from the Distributor through which the product was purchased within a reasonable time and in no event more than thirty (30) days after the discovery of the nonconformity. HySecurity will investigate and, in the event of a breach, will provide, within a reasonable period of time, one of the following: (1) repair or replacement of any nonconforming products or components or (2) refund of the price upon return of the nonconforming items. HySecurity reserves the right to supply used or reconditioned material for all warranty claims. HySecurity will not be considered to be in breach of or default under this Warranty because of any failure to perform due to conditions beyond its reasonable control, including any force majeure. This warranty does not cover any incidental expenses, including fines or penalties, temporary security, labor, shipping, travel time or standby time that are incurred for inspection or replacement of any nonconforming items. As a condition of warranty coverage, warranty claims must be submitted in accordance with the procedures described on the HySecurity form, "RMA Procedures."

THE REMEDY SELECTED BY HYSECURITY IN ACCORDANCE WITH THIS PARAGRAPH SHALL BE THE **EXCLUSIVE AND SOLE REMEDY OF BUYER FOR ANY BREACH OF WARRANTY.**

4. Exclusion of Consequential and Incidental Damages.

HYSECURITY SHALL NOT BE LIABLE FOR ANY INCIDENTAL, SPECIAL, OR CONSEQUENTIAL DAMAGES, WHETHER RESULTING FROM NONDELIVERY OR FROM THE USE, MISUSE, OR INABILITY TO USE THE PRODUCT OR FROM DEFECTS IN THE PRODUCT OR FROM HYSECURITY'S OWN NEGLIGENCE. This exclusion applies regardless of whether such damages are sought for breach of warranty, breach of contract, negligence, or strict liability. This exclusion does not apply to claims for bodily injury or death.

5. Severability.

If any provision of this warranty is found to be invalid or unenforceable, then the remainder shall have full force and effect.

6. Proprietary Rights.

HySecurity retains and reserves all right, title, and interest in the intellectual property rights of its products, including any accompanying proprietary software. No ownership of any intellectual property rights in the products or accompanying software is transferred to Distributor, Dealer/Installer, or End User.

7. Applicable Law.

This warranty will be interpreted, construed, and enforced in all respects in accordance with the laws of the State of Washington, without reference to its choice of law principles. The U.N. Convention on Contracts for the International Sale of Goods will not apply to this warranty.

HySecurity Warranty D0317 Revised 032919

Page 1 of 1

SlideSmart™ CNX model, AC or solar

Standard	SlideSmart CNX 15
Solar	Solar ready for 24V panels
Gate Weight Max.	1,500 lb (680 kg)
Gate Length Max.	50 ft (15 m)
Pull Force*	300 lb
Rate of Travel	0.75, 1 or 1.25 ft/s (23, 30 or 38 cm/s)** Open/Close speed set independently
Duty Cycle	Continuous
Horsepower	Equivalent to 1/2 hp
Drive	Electromechanical - 24V Brushless DC motor with direct drive gear train
UPS Battery Backup Cycles***	Field configurable to fail open or secure when batteries deplete. Standard battery backup gate travel: Two 8Ah batteries. Up to 4,000 ft (1,219 m) after AC power loss. Extended battery backup gate travel: Two 35Ah batteries. Up to 16,000 ft (5,486 m) after AC power loss.
Temperature Rating	-13º to 158º F (-25º to 70º C)
Operating Voltage	24VDC
Input Voltage	Switch select 115V or 208-230V, 60/50 Hz; Solar: 24V solar panels †
Accessory Power	24VDC at each input & SS relay (2A accumulative)
Communication	BlueBUS, USB, Ethernet, T4, RS-485, Bluetooth, OXI receiver
User Controls	SmartCNX™ Controller with 70+ configurable settings. 32 character OLED display and 7 tactile buttons, or Bluetooth smartphone interface, for programming.
Inputs	15 inputs including 5 control inputs, 2 dedicated entrapment sensor inputs, 3 user programmable inputs, a BlueBUS port, and 4 Hy5B vehicle detectors sockets. Optional SmartCNX™ I/O Expansion module for 8 additional user programmable inputs.
Relays	3 configurable user relays: Two 30VDC, 2A solid state. One 240VAC, 20A electromechanical; Optional SmartCNX I/O Expansion module for 8 additional relay outputs.
Finish	Zinc rich primer with black powder coated chassis. High impact copolymer cover.
ETL Listed (UL 325)	Usage Class I, II, III, IV**
Warranty	5 year (7 year single-family residential) w/product registration

* Nice HySecurity manufacturers only reliable and powerful gate operators and provides an extra margin of power to be certain the gate works in adverse conditions. Some manufactures overstate the length and weight capacity of their operators, but Nice HySecurity rates conservatively. Note that our pull force ratings are substantial and that extra margin of power is part of the HySecurity reputation for reliability.

** Speed setting cannot be configured to exceed 1 ft/s for Class I and II usage.

*** The actual number of gate cycles available from battery depends upon gate resistance to travel, cycle length, battery size, state of charge and health, ambient temperature, accessory power draw and frequency of gate cycles during power outage.

† 60 Watt minimum 24VDC solar panel (or two 12V - 30W panels wired in series), not included but required for solar operation. Visit hysecurity.com or call for information on solar panel size calculations.

To enable fully automatic operation, all SLIDE gate operators require a minimum of TWO monitored external entrapment protection sensors (one for each direction) to protect entrapment zones in both the open and close direction of travel. Visit hysecurity.com/gatesafety for more information on UL 325 standards and gate safety.

Part	Version
System firmware	H6.01
SmartCNX controller	RevA
Drive module	RevA, RevB, RevC

Note: If the versions above do not match your operator visit the website in Contact Information below for a manual that matches your operator.

Contact Information:

Visit support.hysecurity.com for Installation manuals, replacement part instructions, part diagrams and more.

Qualified Nice | HySecurity distributors are experienced and trained to assist in resolving installation problems. For the name of a qualified distributor near you, call HySecurity at 800-321-9947. *Before contacting your distributor or HySecurity Technical Support, obtain the serial number of your operator.