Installation and Reference Manual

StrongArm™ 20, 28, 36, 14F

(HTG)

Hydraulic barrier gate operator with Smart Touch Controller

HySecurity®

Simple. Reliable. Secure.®

800-321-9947 • www.hysecurity.com

HySecurity Upgrades

Software: The latest software release for HySecurity operators is now available at www.hysecurity.com. To update your operators and electronic boards, download the following from our website:

- Smart Touch Analyze and Retrieve Tool (S.T.A.R.T. software)
- Smart Touch Controllers (STC) operator code

NOTE: Keep your HySecurity gate operators current by "uninstalling" outdated versions of the S.T.A.R.T. application on your PC (laptop) and uploading the latest version of S.T.A.R.T. and operator code onto it for use in the field. If you are using an outdated version of S.T.A.R.T. with a newly installed operator, an AL22 alert code may appear. To clear the alert code, you need to access the Installer Menu and make sure the sequential gate (SG) menu item is set to 0.

Upgrade features of S.T.A.R.T. software and operator code include:

- New dual (DG) menu allows easy integration of dual gate installations (Master/Slave and Sally Port Gates) using the RS-485 communication capabilities.
- A new menu item, Sequenced Gates (SG), has been added to the STC Installer Menu. This feature handles communication between gates in sequence, such as a barrier arm and a slide gate. The Sequenced Gate menu item will not appear if the Dual Gate function is active (dg is set to a number other than 0). How to program a sequenced gate is described in the *StrongArm M30 Programming and Operations Manual*, available online at www.hysecurity.com. The information will soon be available in all product manuals.

User Programmable Output Relays

A programmable relay feature has been added, User Relay #25, *DC Power Alert*. The DC Power Alert relay deactivates when the software detects a low battery voltage (below 21VDC, but greater than 18VDC) for a duration of 2 seconds or more. To slow battery drain, accessory power loads are shed.

If you have an operator hooked up to a DC power supply, connect to Output Relay 3, and then access the Installer Menu to program the User Relay 3 (r3_) option. Alerts appear indicating low battery (bAdP) or dead battery (bAt-dEAd) when the battery voltage drops to critical levels.

Alert and Error Codes

When troubleshooting, the codes that appear on the display provide an indication of what is happening with the gate operator. With the software upgrade, new codes include:

Display Code	Error/Fault/Alert Description	Buzzer Chirp Sequence	Possible Cause & Suggested Corrective Action
AL21	VFD Error Alert	2 chirps per second every 15 seconds	No gate or barrier arm travel will occur until the alert is cleared. Any open or close command resets the alert and allows the operator to run unless the VFD is experiencing a fatal error. If you cannot clear the error alert by pressing the open or close button, contact HySecurity.
AL22	Interlock/Sequential Gate communication lost	2 chirps per second every 3 seconds	Appears when the RS-485 communication connection is lost for more than 5s between interlocked (dual gate) or sequenced gate operators. Check cable connections and wiring. Make sure both operators are working properly and have identical and up-to-date software versions. Make sure you are using the current version of S.T.A.R.T. software. The alert auto clears when communication between the two operators is restored. If the operator on site is a singular gate and the display code AL22 appears, access the Installer Menu. Verify the Installer Menu items: d9 (Dual Gate) and S9 (Sequential Gate) are both set to zero.
Err6	STC – VFD Communication Error	3 chirps per second once per minute	Internal error between the STC board and the VFD. If you set the speed and receive an ERR6, check the cable & wiring connections between the VFD and STC. If a ModBus cable does not exist, reset the speed (SP) to 1.

New Products from HySecurity

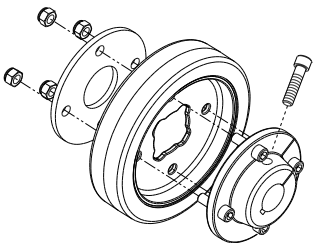

- **AdvanceDrive™ Wheel System:** HySecurity has developed a 6-inch composite drive wheel and improved mounting system that is replacing the cast polyurethane drive wheels on SlideDriver models. For more information, refer to the Technical Bulletin on the HySecurity website. Installation Instructions are shipped with the replacement wheels. Plans are in place for 8-inch wheel availability by year end.
- **XtremeDrive™ Option:** The XtremeDrive option for HySecurity SlideDriver operators consists of a cogged lower wheel that engages a matching cogged rack which is mounted to the underside of the drive rail. This configuration produces better pull force for large, heavy gates and provides better traction the entire length of the drive rail. The XtremeDrive is available in 6- and 8-inch drive wheel kits that contain installation instructions. The Rack Kit provides one 25-inch rack and the required hardware for installation. A onetime purchase of an Install Kit provides a drill jig, countersink bit, and transfer punch for easy installation.

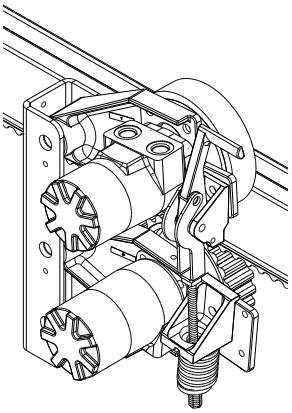

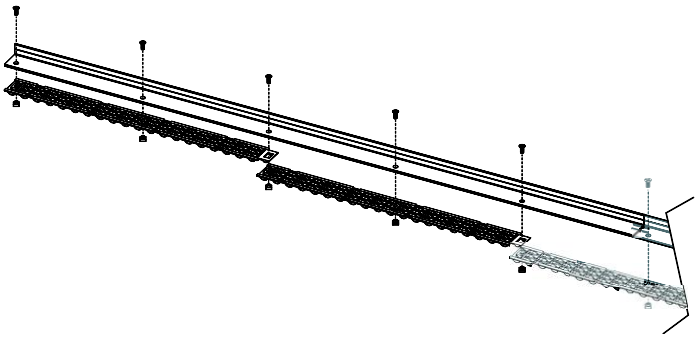

HySecurity

Simple. Reliable. Secure.

StrongArm (HTG 320) Barrier Arm Gate Operator – Quick Start Instructions

These instructions are provided as a quick reference guide to the experienced installer that is already familiar with all safety precautions and the installation of this gate operator. Do not attempt to install from this guide if you are inexperienced with this product.

1. Using four 1/2" x 4 1/2" anchor bolts mount the operator to a concrete slab which reaches below the local frost line. If necessary, use shims to level the base.

2. If installing the DC version of the operator, be careful to mount the battery power supply box very near the control enclosure because of the high current demand by the DC motor. **Note:** For the DC version, refer to **Section 8** of the operator handbook.

3. Connect the electrical power to loose wires from the On/Off switch and a grounding wire to the lower left corner of the electrical panel. Be certain the labeled voltage and phase of the operator matches the available supply.

4. Turn on the power switch. The Smart Touch LCD display should show, after a 2-second delay, the characters [uC_0]. This is a setting for the UL user class that must be made before any function will be possible. Press the Select button, then the Next button and change the 0 to be class 1-4 as appropriate for the site. Press the Select button again to lock the setting.

5. Press the Menu button and the display will jump to the close timer setting [Ct_0]. If a close timer function is needed, set in the same manner as above. Press the Menu button again to exit to the Run Mode. The LCD display should now read StoP, CloS or OPEn.

6. If the operator contains more than four counterweights per side, the arm must be mounted before the gate operator can be allowed to function. Otherwise, test for normal operation of the gate.

7. Install the barrier arm and clamp securely. Single arms, up to 18' maximum can be installed on either the left or right side of the operator. Arms longer than 26' include anti-sway cable harnesses that must also be attached.

8. Run the operator and verify normal smooth operation. If the arm stops abruptly at the end of travel, it may be necessary to adjust either of the open or close brake valves and/or a limit switch setting. There are two brake valves on the pump manifold and the one closest to the motor controls the stopping of the arm in the closing direction. The open direction stop control is with the brake valve just to the left. If adjustment of either brake valve is necessary, loosen the 9/16" lock nut and turn the adjuster screw with an Allen wrench. A CCW adjustment will stop the arm more quickly. The limits must be set to trigger about 10 degrees of arc before the arm has reached full travel. If adjustment of the limit switches is necessary, slightly loosen the set screws on the cams at the top of the operator and set the limits to trip early enough to ensure a smooth stopping arm. For detailed instructions on barrier arm adjustments, review the page titled StrongArm (HTG 320) Adjustments in the handbook.

9. Connect any required accessory device wiring. Note that the various inputs are all one wire only to the main terminal strip while the other wire connects to the Common Buss on the nearby power supply board.

10. To access the User menu in the Smart Touch Controller, simply press the Menu button while there is no active Open or Close input. The display will scroll system values and stop at the [Ct__] close timer setting. There are 12 menu items in the User Menu. To reach the more detailed Installer menu, the system must be in the User Menu first, then simultaneously press Open and Reset. The display will go to [uC__] which is the first of 32 items in the Installer Menu. Read the instructions before attempting any adjustments!

Smart Touch Controller Menu Guide for StrongArm (HTG 320)

To gain access to the User Menu, press the Menu button when the gate is stopped. The LCD will scroll through key several items, then stop at the close timer setting [Ct].

	User Menu Options	Default	Description
U1	[Ct 0] Close timer setting	0	0 = Close timer off or 1 – 99 seconds
U2	[hC 0] Momentary Close	0	0 = momentary, 1= Constant hold PB required to close gate
U3	[ho 0] Momentary Open	0	0 = momentary, 1= Constant hold PB required to open gate
U4	[AP 0] AC Power loss function	0	0 – 3 (0 =Type A, 1 = B, 2 = C, 3 = D) See handbook
U5	[ro 0] Radio control option	0	0 = Open only, 1 = Adds Close capability when fully open
U6	[bF 2] Warn before operate	0	0 = none, 1 = Buzzer alerts 3 sec before & when in motion, 2 = Buzzer alerts 3 sec before + first 2 seconds in motion
U7	[FA 0] Forced open Alert and automatic gate reposition	0	0 = disabled, 1 sound buzzer (2 pulses/sec) if forced open for more than four seconds, time out in 30 Sec
U8	[dA 0] Drift Closed Alert and automatic gate reposition	0	0 = disabled, 1 sound buzzer (2 pulses/sec) if drift closed and cannot reopen within four seconds.
U9	[PE 0] Photo Eye Align Mode	0	0= off, 1 = on (auto reset to 0 when close limit triggered)
U10	[CL 0] Clock set (24 hour type)	0	0= display, 1= set mins, 2= set hours, 3= set day, 4= month
U11	[Ld 5] LCD Contrast set	5	1 - 9 = Adjusts contrast of the display
U12	[dS 0] Data Log (New gen board only)	0	0 = Std. 1 = Extended (reset to 0 in 24 hr) (V4.xx software)

Note for U6 – The Warn before operate buzzer is an accessory device for StrongArm (HTG 320) operator.

To access Installer Menu, press the Open & Reset buttons together while in the User Menu.

	Installer Menu Options	Default	Description
I1	*[uC 0] Set UL Usage Class*	*0*	*0 = Gate disabled, Set Class 1 through 4 use*
I1a	*[bu 0] Choose Buzzer*	*0*	*0 = Buzzer not set, 1 = Freq 1, 2 = Freq. 2*
I2	[Fd 0] Load Factory Defaults	0	0 = User Settings, 1 = Load defaults (resets entire menu)
I3	[dg 0] Set Master/Slave type	0	0 = Solo operator, 1 = Slave unit, 2 = Master unit
I4	*[Ch 0] Set AC Charger or Solar*	*0*	*0 = DC + AC charger, 1 = DC + Solar charger*
I5	[Fo 0] Enable Fire Dept. Open	0	0 = input disabled, 1 = enabled
I6	[oC 0] Enable Emergency close	0	0 = input disabled, 1 = enabled
I7	[SE 3] Inherent Sensor sensitivity	3	1 = Maximum sensitivity, 9 = Lowest sensitivity
I8	*[SS 0] Inherent Sensor function*	*0*	*1 = stop only (note, functions in usage class 4 only)*
I9	*[LC 0] Leaf delay Close*	*0*	*0 = none (1-7) ½ second steps (Master/Slave only)*
I10	*[Lo 0] Leaf delay Open*	*0*	*0 = none (1-7) ½ second steps (Master/Slave only)*
I11	[rt 0] Maximum run timer	0	0 = 60 Seconds max run, 1 = 300 Seconds max run
I12	[EC 0] PEC reverse to open	0	0 = Close eye stops only, 1 = 2 sec reverse to open
I13	[PC 0] Set PEC output – NO/NC	0	0 = Normally Open PE output, 1 = N.C. (Supervised mode)
I14	[gC 0] Set Edge input – NO/NC	0	0 = Normally Open Edge output, 1 = Normally Closed
I15	[tC 1] Time clock/ Interlock input	1	0 = select Time Clock, 1 = select Open Interlock
I15a	[dt 0] Disable Free Exit/Close Timer	0	0 = disable Free Exit, 1 = disable Close Timer
I16	[or 1] OOLD detector function	1	0 = pause closing only, 1 = enable reversing to open
I17	[ir 1] IOLD detector function	1	0 = pause closing only, 1 = enable reversing to open
I18	[Cr 1] RLD -Reset detector function	0	0 = Reopen if tripped while closing, 1 = Pause only
I19	[Cb 0] RLD -Reset detector function	0	0 = One way, 1 = Bi-directional - disables ELD if tripped first
I20	[CP 0] RLD -Reset detector function	0	0 = Std. Close, 1 = Count opens & closes after equal reset
I21	[Eb 0] ELD –Exit detector function	0	0 = Off, 1 = Enable ELD back off auto close feature
I22	[r1 0] User relay 1 option	1	0 = disabled, 1 – 24 = see relay output options page 26
I23	[r2 0] User relay 2 option	6	0 = disabled, 1 – 24 = see relay output options page 26
I24	[r3 0] User relay 3 option	1	0 = disabled, 1 – 24 = see relay output options page 26
I25	*[tL 0] Gate Open alert*	*2*	*0 = 0 sec, 1= 15s, 2= 45s, 3= 75s, 4= 105s, 5= 135s*
I26	*[Lt 0] Loitering alert*	*3*	*0 = 0 sec, 1= 15s, 2= 45s, 3= 75s, 4= 105s, 5= 135s*
I26a	[SA 0] System Address	0	0 = no network, 1-99 network “drop” address
I27	[ELd0] Test factory ELD	0	0=Run, 1=show freq, 2=show call level 0-7, 3= set Freq 1-4
I28	[iLd0] Test factory IOLD	0	0=Run, 1=show freq, 2=show call level 0-7, 3= set Freq 1-4
I29	[oLd0] Test factory OOLD	0	0=Run, 1=show freq, 2=show call level 0-7, 3= set Freq 1-4
I30	[rLd0] Test factory RLD	0	0=Run, 1=show freq, 2=show call level 0-7, 3= set Freq 1-4

HySecurity Gate Operators

HYDRAULIC BARRIER ARM GATE Operators

With Smart Touch Controller

Installation and Maintenance Manual

Models: HTG 320-2, HTG 320-3
HTG 320-6, HTG 320-8
and
DC Battery UPS version

Phone: 800-321-9947
FAX: 888-321-9946

Internet: www.hysecurity.com
Email: info@hysecurity.com

D0120 Rev C
1/31/2011

Barrier Arm Gate Operator

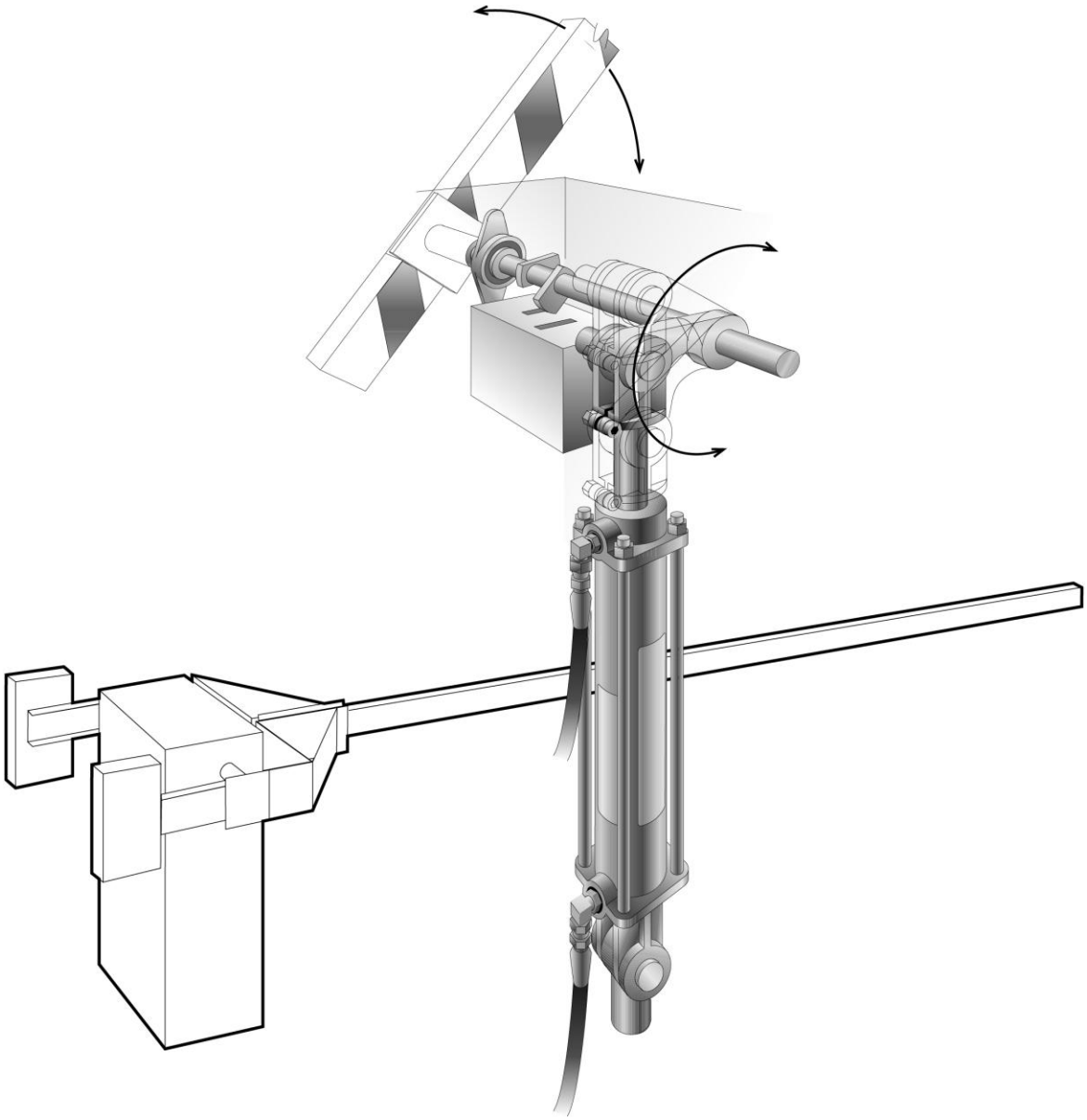

Copyright Notice

© Copyright 2011 by HySecurity Gate Inc.

All rights reserved. No part of this manual may be reproduced by any means (photocopier, electronic, or mechanical), without the express written permission of HySecurity Gate Inc. Federal Copyright law prohibits the reproduction, distribution, or public display of copyrighted materials without the express written permission of the copyright owner, unless fair use or other exemption under copyright law applies. Additionally, HySecurity Gate Inc. makes no representations or warranty with respect to this manual. We also reserve the right to make changes in the products described without notice and without any obligation to notify any persons of any such revision or change.

Trademarks

StrongArm, Smart Touch Controller, S.T.A.R.T. and the HySecurity logo are trademarks or registered trademarks of HySecurity Gate, Inc.

Publication Information

Published in the United States of America. January 31, 2011

HySecurity
Simple. Reliable. Secure.

Table of Contents

Introduction 1
Warranty Registration 2
Available Models and Features 3-4

I. Safe Gate Design

Important Information for Gate System Installers, Owners & Users 5-6
Typical System Schematic for a Barrier Gate 7
Tools Required 8

II. Installation

Installation Preparations and Installation 9-11
HTG 320 Components 12
HTG 320 Adjustments 13
Manual Operation 14
Technical drawings 15-17

III. Smart Touch Set up

Basics of Using the Smart Touch Controller 18
Installation Configuration for Smart Touch Controller 19
Wiring Control Inputs to the Smart Touch Controller 20-21
Connecting a Master/Slave Pair 22
Table of User and Installer Menu Functions 23-27
User Menu: Description Functions Available 25
Installer Menu: Description Functions Available 26-27
Options for User Programmable Output Relays 28
Clock Functions 29

IV. Entrapment Protection

Entrapment Protection Schematic 30
UL 325 Standard Requirements for Entrapment Protection Devices 31
Placement and Use of Secondary Pedestrian Entrapment Sensors 32
Installing Gate Edge (Contact Type) Reversing Sensor 32
Installing Photoelectric (Non-Contact) Sensor 33-34

Table of Contents, continued

V. Detectors and Loops

Loop & Detector Installation Guide 35-37
Vehicle Detector Options 38
HySecurity Hy-5A Vehicle Detector Installation 39
Standard 11-Pin Vehicle Detector Installation 40
Detector & Loop Fault Diagnostics 41

VI. Accessories

24 Hr / 7 Day Time Clock Option 42
Connecting a Radio Receiver 42

VII. Troubleshooting and Maintenance

Troubleshooting 43-44
Maintenance 45-46

VIII. Two part Operators (Battery types)

Important Notes about DC Powered Gates 47
DC Wiring & Control 48
Battery Supply Diagrams 50

IX. Appendix

Wiring Size Schedules 51-52
Components & Replacement Parts 53-59
Smart Touch Controller Connections 60
StrongArm Brake Valve Adjustment Procedure 61
Limited Warranty 63

Introduction

Welcome – We would like to take this opportunity to thank you for this purchase. HySecurity has manufactured the finest hydraulic gate operators available since the 1970s. Our commitment to quality and innovation will become evident as you become familiar with the features and performance of this expertly engineered machine. All HySecurity operators are equipped with the Smart Touch Controller, a digital electronic brain that offers unparalleled features.

Please take a few minutes to study the contents of this instruction manual. The benefits of taking a little extra time to align the gate operator properly and to verify a fully functional installation will ensure customer satisfaction and a longer life with minimal maintenance costs.

Installers and owners must be certain to thoroughly review and understand the Important Information regarding pedestrian entrapment protection contained within this manual. There are hazards associated with automatic gates that can be greatly reduced with proper design, installation use. When an automatic gate is first made functional, the installer must teach the owners and users how to operate this system correctly. When the installation is complete, leave this manual for the owner's use and reference.

Please do not hesitate to give your HySecurity distributor a call if you experience any difficulties during the installation. They are experienced and trained to assist in resolving any problems.

PRODUCT & WARRANTY REGISTRATION

Enter the following information to register your HySecurity product. Please write legibly. **Today's Date:**_____

NOTE: To extend the operator warranty beyond 1 year, you must return this registration within 60 days of purchase. Refer to the *Limited Warranty*.

Installer Information

First/Last Name: _____

Company Name: _____

Address: _____

City: _____ State/Province: _____

Country: _____ Postal Code: _____

Daytime Phone: _____ Fax: _____

E-mail: _____

End-user Information

First/Last Name: _____

Company/Association: _____

Address: _____

City: _____ State/Province: _____

Country: _____ Postal Code: _____

Daytime Phone: _____ Fax: _____

E-mail: _____

Product Information

Model name/number: _____

Serial number: _____

Purchase Date: _____

Purchase Price: _____

Distributor's name: _____

Distributor's City: _____

Country: _____

Installation Date: _____

Who is completing this form?

☐ Installer ☐ End User ☐ Distributor

☐ Maintenance Personnel ☐ Other _____

Additional Comments

_____

Did you visit the HySecurity website before purchasing your product?

☐ Yes ☐ No

How did you hear about HySecurity gate operators? (Check all that apply.)

☐ Advertisement ☐ Exhibition ☐ Distributor

☐ Business associate ☐ Other (please specify): _____

What factor(s) most influenced your purchase? (Check all that apply.)

☐ Performance ☐ Price ☐ Power

☐ Reliability ☐ Brand ☐ Prior Experience

☐ Recommendation ☐ Warranty ☐ Product Weight

Fax or Mail this completed form to:

HySecurity, Inc
6623 South 228th Street
Kent, WA 98032

Fax: 888-321-9946
Email: info@hysecurity.com

HySecurity provides product installation, maintenance and troubleshooting training. View opportunities online at the HySecurity website: www.hysecurity.com/support. For Technical Support, call 800-321-9947.

HySecurity does not share this warranty registration information with third parties unless the requested services, transactions, or legal requirements necessitate it.

Available Models and Features

Model	StrongArm 14F	StrongArm 20	StrongArm 28	StrongArm 36
Part #	HTG 320-2	HTG 320-3	HTG 320-6	HTG 320-8
Duty Cycle	2,000 cycles/day	2,000 cycles/day	2,000 cycles/day	2,000 cycles/day
Arm Speed	2-sec. to open; 3-sec. to close	3-sec. to open; 4-sec. to close	5-sec. to open; 6-sec. to close	8-sec. to open; 8-sec. to close
Horsepower	¾	¾	¾	¾
Warranty	5 years	5 years	5 years	5 years
Soft Stop	Yes	Yes	Yes	Yes
Brake Valves	Yes	Yes	Yes	Yes
Soft Start	No	No	No	Yes
Arm Length	Up to 14'	Up to 20' (Side mount available for arms up to 18')	Up to 28'	Up to 36'
Arm Designs	Side mount aluminum or fiberglass (Wood up to 14')	Side or center yoke aluminum or fiberglass (Wood up to 14')	Center yoke aluminum or fiberglass	Center yoke aluminum or fiberglass
UL Class	1 - 4	1 - 4	1 - 4	1 - 4

Stopping the Gate
All models employ a time delay **Soft Stop** system. Additionally, brake valves (shown at right) are used to control the smooth stopping of the gate. These valves are exclusive to HySecurity's operators. They are independently adjustable to allow the gate to stop predictably without banging.

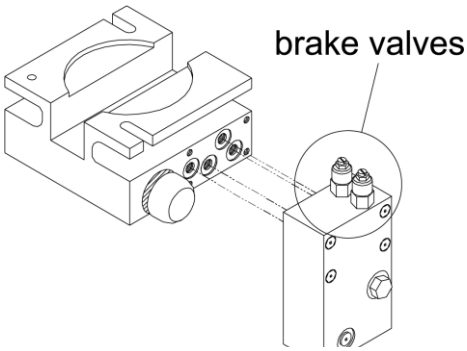

Starting the Gate
When starting very heavy barrier arms, it is necessary to Soft Start the load gently, in addition to stopping it smoothly. HySecurity accomplishes Soft Start with another exclusive feature we call an AWOG, which diverts some of the start-up hydraulic flow and thereby allows the gate to gently accelerate. This is much like letting your foot slowly off a car clutch – no lurching when the gate starts. The AWOG improves the life and performance of a gate system and never needs adjustment.

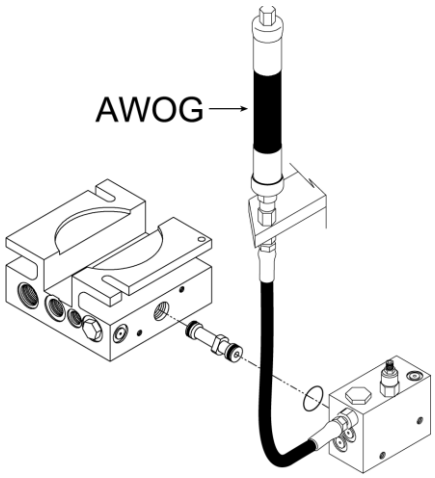

NOTE: This feature is standard on StrongArm 36 (HTG 320-8) only.

Available Models and Features

Features:

- **Simple & Reliable Hydraulic Design**
  No gearbox, belts, linkages or clutches to maintain
- **Design Rate: 2000 cycles per day**
- **5-year Limited Warranty**
- **Heavy Duty Components**
  ¾ HP motor handles arms up to 36' in length
- **Anti-corrosion Finish**
  Entirely electroplated, then coated with a high gloss powder paint finish. The (-6 & -8 models are galvanized and include a stainless steel cover)

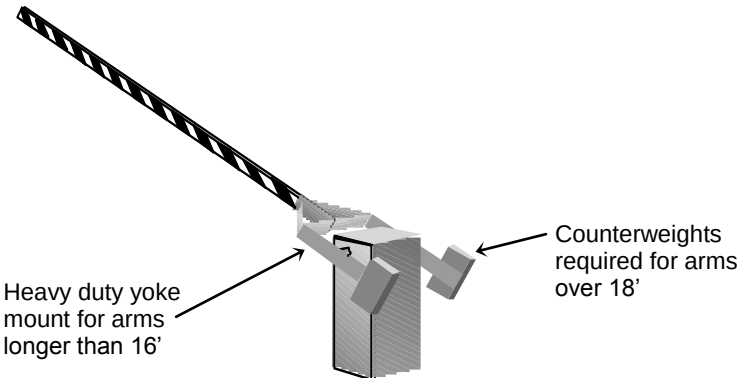

The Smart Touch Controller (Standard)
This is the brain of the all HySecurity's automatic operators. Truly high technology, but is also very rugged to reliably serve in the harsh environments that exist in the real world. The Smart Touch Controller is also very smart and can quickly be configured by an installer or user to adapt to about any functional requirement of a specific site. All system settings are performed with the use of just five programming buttons and an LCD display. The Smart Touch Controller has no switches of any type to set. An RS232 port is for external communication is standard. The system also has a real time clock and an EEPROM to record system events. The log of events can be downloaded from the RS232 port with a PC and serial cable. Our optional vehicle detector modules set a new industry standard by communicating a host of valuable performance data to the microprocessor in the Smart Touch Controller via a serial data stream, providing user-friendly diagnostics.

DC 24-Volt UPS Operators (Optional)
These gate operators function from 24 Volts DC all of the time to achieve a true UPS system. Our **Uninterruptible Power Supply** is the most certain way to know that your gate will work when the AC power fails. This system features fully sealed maintenance free batteries in a separate insulated and ventilated enclosure. This two-battery system provides at least 1,000 full open & close operations in the event of AC power loss.

HySecurity
Simple. Reliable. Secure.®

READ THIS FIRST!

Important Information – Review Before Installation

Automatic gate operators provide convenience and security to users. However, because these machines can produce high levels of force it is important that all gate operator system designers, installers and end users be aware of the potential hazards associated with improperly designed, installed or maintained systems. Keep in mind that the gate operator is only one component of the total gate operating system. It is the joint responsibility of the specifier, designer, purchaser, installer and end user to verify that the total system is appropriately configured for its intended use. All parties should be informed that entrapment in a moving gate could cause serious injury or death.

Common Industry Symbols

Attention -Take Note-

-Danger- Keep Away

Entrapment Zone

Possible Pinch Point

Important Instructions for Gate System Designers & Installers:

WARNING: To reduce the risk of serious injury or death, read and follow all instructions in the gate operator handbook and on the warning labels.

Install an Automatic Barrier Arm Gate Operator only When:

- Automatic gates are for vehicular use only! Provide walkways and signs to direct pedestrians and bicycles to a separate walk-through entrance. Because an automatic gate can start at any time without warning, always keep people away from the area of the gate. The Warning labels that have been supplied with this operator must remain installed, in manner clearly visible, in the area of both sides of the gate.

- All exposed pinch points are to be guarded. To reduce the risk of entrapment, the gate operator must also be installed so that at least two feet of clearance is provided between the operator, barrier arm and adjacent structures both when opening and closing.

- The barrier arm must not to be modified in any way that creates a risk of entrapment or a possibility that some portion of the moving arm could snag onto the clothing of a pedestrian that happened to be nearby. Specifically prohibited are any chains or other material attached to the barrier arm that may create such a hazard.

Install An Automatic Barrier Arm Gate Operator Only When:

- The operator will be properly electrically grounded and the intended supply voltage matches the voltage label on the operator.

- The controls that operate the gate have been mounted far enough away from the moving gate such that users cannot touch the gate while operating the controls. All easily accessible controls must have a security feature to prevent unauthorized use.

- The operator controls will be located in a clear line-of-sight to the gate. Radio controls and other remote access controls must be connected only to the **Remote Open input.**

- The required external entrapment sensors will also be installed. Be certain to carefully review the instructions for placement, installation and adjustment of these external entrapment sensors. If edge (contact) sensors are used, they are to be mounted on the bottom edge, of the arm. If photo eyes or other non-contact sensors are used, they are to be mounted in locations most likely to guard against entrapment. A combination of contact and non-contact sensors may be used, but all must be recognized components under the UL 325 standard. See pages 34 and 35 for details on the requirements.

- If the Entrapment protection is provided by a continuous pressure actuation control, a placard stating “WARNING” – “Moving Gate has the Potential of Inflicting Injury or Death - Do Not Start Gate Unless Path is Clear.” Additionally, no other activation device shall be connected and an automatic closing device of any kind shall not be used.

- The automatic operator is labeled as appropriate for both the type and UL usage class of the gate.
  Class I: Intended to serve single to four family residential uses
  Class II: Multi-family use, or any application intended to serve the general public
  Class III: Commercial applications **not** intended to serve the general public
  Class IV: Highest security. Security personnel prevent unauthorized access

- The barrier arm must not be installed in a manner that will move toward a rigid object closer than two feet.

Important Information for Gate System Owners & Users

WARNING: To reduce the risk of serious injury or death, read and follow all instructions in the gate operator handbook and on the warning labels.

Save These Important Owner and User Instructions:
(Installers – be certain to instruct the owners and users about the following items)

- Automatic gates are for vehicular use only! Provide walkways and signs to direct pedestrians and bicycles to a separate walk-through entrance. Because an automatic gate can start at any time without warning, ALWAYS KEEP PEOPLE AWAY FROM THE AREA OF THE GATE. The Warning labels that have been supplied with this operator must remain installed, in manner clearly visible, on both sides of the gate.

- Never allow children to use or play with controls that operate the gate. Keep all remote controls, especially radio transmitters, away from children.

- Teach all users how to turn off the electric power and how to release and move the gate manually. Use the manual release only when the gate is not moving.

- KEEP AUTOMATIC GATES PROPERLY MAINTAINED. Have a professional gate installer perform routine tests of the entrapment protection sensors, such as photo eyes and gate edges.

Typical System Schematic for a Barrier Gate

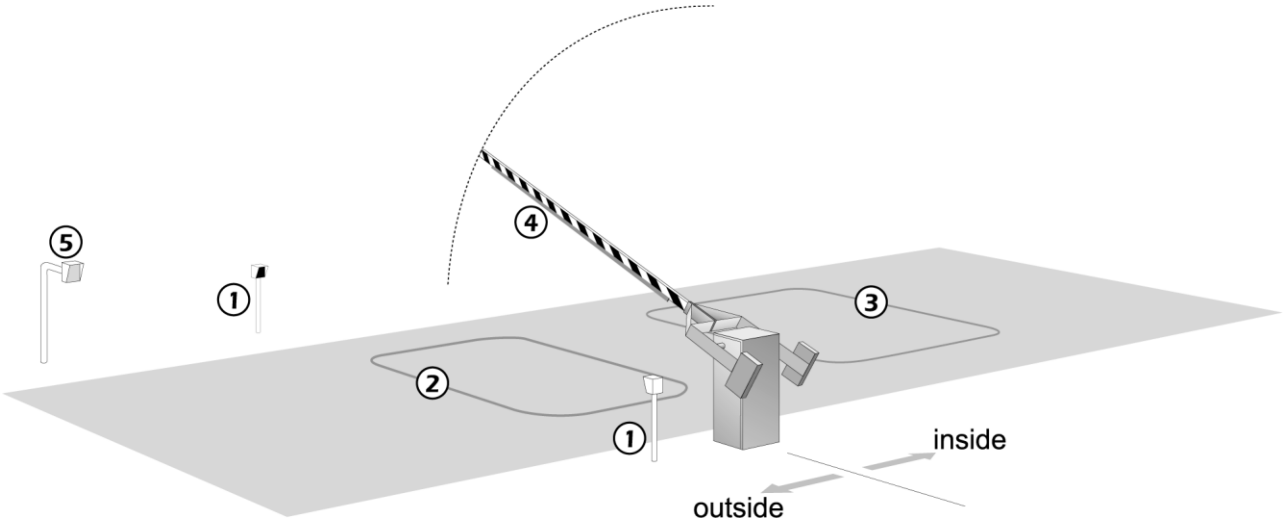

The following is a sample plan that incorporates the common elements of a typical bi-directional automatic barrier arm gate.

1. A Photo eye helps to protect pedestrians that may stray into the path of the barrier arm.
2. An in ground vehicle sensing loop (reset function) to control closure, so that arm closes immediately when a vehicle clears the barrier arm path.
3. An in ground vehicle sensing loop (free exit) activates the gate to open automatically from the inside.
4. Edge sensor to re-open the arm if an obstruction is encountered.
5. Gate entry device (card reader, telephone entry, keypad, etc) opens the gate after proper input from vehicle driver.

Tools Required for an Efficient Installation

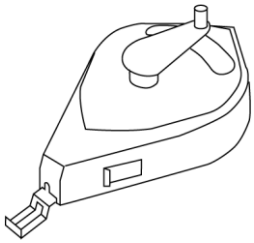

1. Chalkline or other builders string

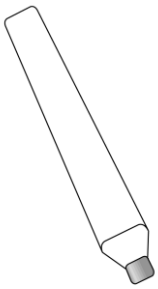

2. Carpenters pencil or crayon

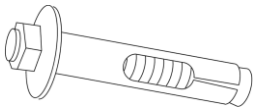

3. Concrete anchor bolts, four 1/2" x 4"

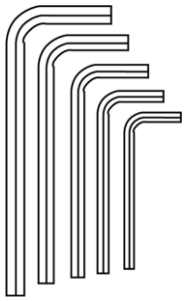

4. Allen wrench set

5. Hammer

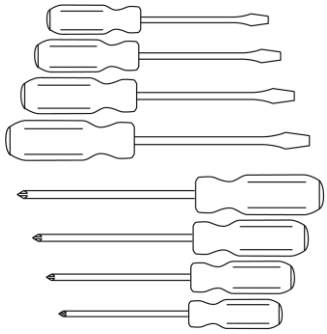

6. Screwdriver sets, Straight and Phillips

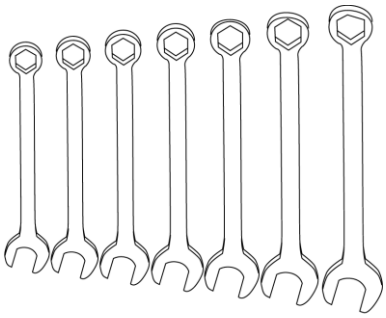

7. Wrench set, open end, 1/4" through 1"

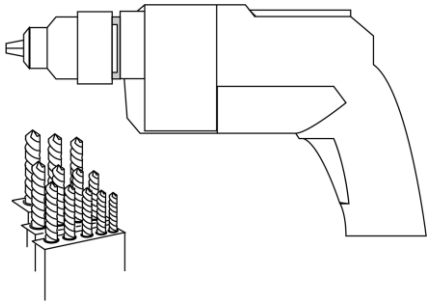

8. Electric drill and bits, 1/8" through 3/8"

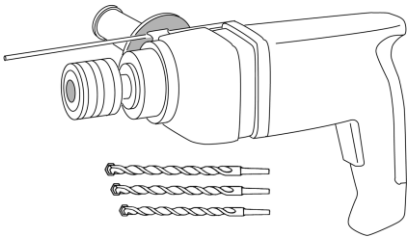

9. Roto-hammer and bits, 3/8" & 1/2"

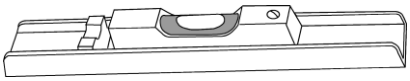

10. Level—it doesn't need to look like this one, but the installation needs to be level!

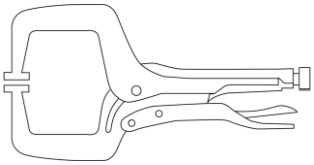

11. Two pair wide jaw vice grip pliers, or two C clamps, 4" capacity

Installation Preparation Checklist

1. Read *all* of the instructions, especially the Important Information in Section 1 at the beginning of this manual, before you attempt installation. This section is focused upon mechanical installation. For electrical setup, refer to Section 3, on system configuration and use of the Smart Touch Controller.

2. Pour a concrete mounting slab that is a minimum of 20” x 20” x 20” with the electrical conduits located correctly to enter the chassis. Keep in mind that a space of 7 X 11” just inside of the operator door is where the conduits must enter into the operator. HySecurity recommends a slab reaches below the local frost line. See the footprint plan and elevation view on pages 13-15.

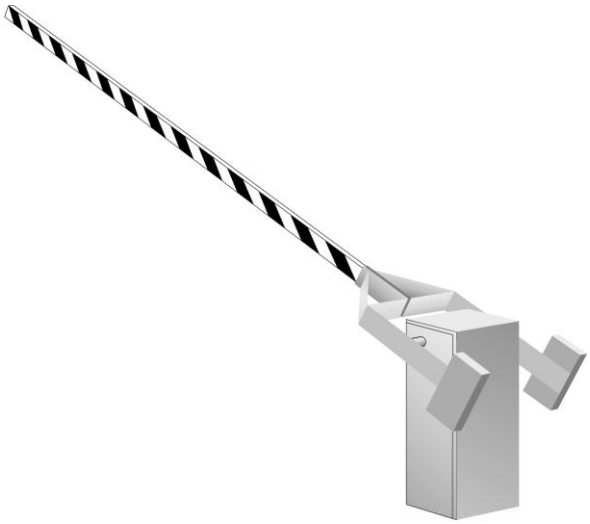

Installation

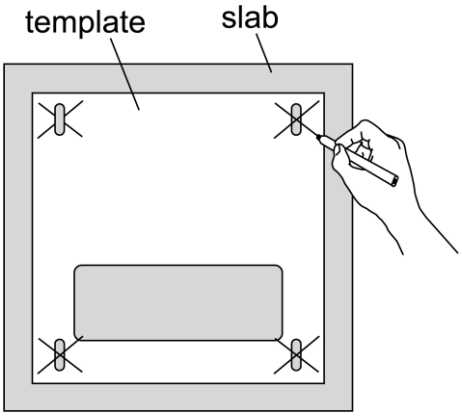

1. **Drill four holes for concrete anchors**
   The operator must be mounted with four anchor bolts. These will be 12.5” on center with a square pattern to match the chassis base. Line up the operator so that the end of the barrier arm is in the intended position. Place the operator over the conduit and mark the mounting holes. Once marked, remove the operator and drill for ½” min. anchor bolts.

2. **Line up the operator**
   Set the operator over the mounting bolts, align the operator and securely tighten the bolts.

3. **Special two part operators**
   DC powered operators come with a separate power enclosure. This enclosure should be mounted within 20 feet of the operator. We recommend wall mounting or using two 4” posts, with horizontal mounting strut to create a support for this enclosure. See also step 6 and section 8 on two part operators.

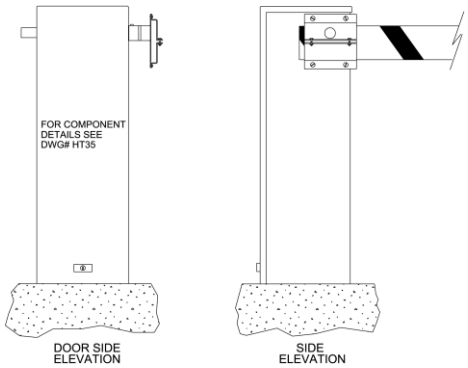

Installation

4. **Electrical power Connection**
   This operator is intended for permanent installation, so all electrical conduits must be properly connected to the control box. The entry for the primary power is a ½ - ¾" knockout on the left side of our control box next to the on-off switch. This operator was built to run on a specific voltage and phase for line power. Make sure the available line voltage and phase matches the nameplate on this machine. Also be certain that the wire size of the branch circuit vs. the distance of the run from the main panel is large enough to avoid excess voltage drop. At a minimum, a 20 amp circuit (protected with a 20 Amp Inverse Time Breaker) should be provided. Also be sure the operator is electrically well grounded per NEC Article 250 and local codes. See the Appendix section for correct wire sizes and detailed electrical wiring information.

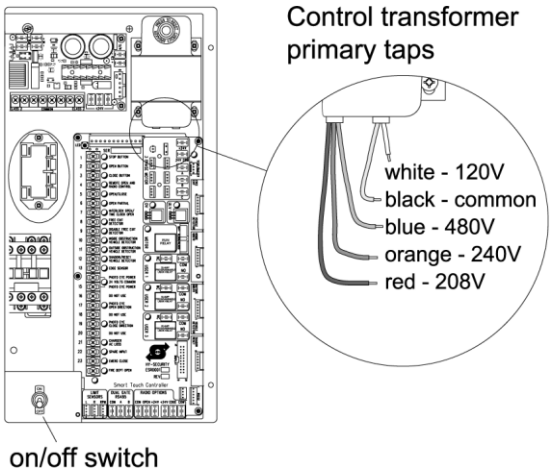

5. **Primary tap of Control Transformer (not on DC battery powered operators)**
   Check to make sure that the primary tap on the control transformer matches the line voltage you have connected to the operator. Measure the line voltage carefully to distinguish between 208V and 230V branch circuits. A label on top of the transformer identifies the various taps.

6. **Power Connection for Two Part Battery Operators**
   The primary AC power must be routed to the DC power supply enclosure, but there must conduits between the gate operator and the DC supply enclosure. Note: AC power is not needed in the gate operator enclosure, unless there is an optional heater. Three separate DC circuits are required between the battery supply and the gate operator. Heavy gage wires to supply the motor and two 14-gage circuits for the controls. The heavy gauge wire must be at least 6-gauge if the DC supply is within 20 feet of the operator, but must be increased to 2-gauge if the DC supply is located farther from the operator. For full details, review the section titled "Two Part Operators".

7. **Replace the Vent Plug!**
   Remove the ½" steel or plastic shipping plug on the pump manifold (left rear corner) and replace it with the supplied black breather cap.

8. **Configuring the Smart Touch Controller**
   The operator controls will not allow the gate to function until the Smart Touch Controller has been configured. Wait to connect the external controls until you have reviewed the Smart Touch Controller instructions, and tested the basic functions of the operator. Review the Smart Touch Setup section.

Installation

Attaching Barrier Arms to the Operator

1. Bolt arm(s) to operator. The maximum length for a single wood board is 14' length. Wood arms that are longer than 14' must be twin arms bolted together near the tip.

2. Counterweights must be used for all arms over 18' in length, to assure proper performance. Verify proper balance by following step #2 on StrongArm (HTG 320) adjustments page.

3. Tubular aluminum arms may be single side mounted up to 18' in length. All arms over 18' must be mounted into a center yoke adapter. Arms longer than 24' are aluminum/fiberglass and include cables to make the arm more rigid, see the arm drawings for their proper location and installation.

Basic Testing

Test the operator for smooth control of the barrier arm. The arm should stop smoothly at each end of travel. If any adjustments are necessary, carefully review the StrongArm (HTG 320) adjustments page. Do not leave the job site without correcting an operator that is stopping abruptly on its limits or damage to the mechanical drive components may occur.

If your operator is equipped with vehicle detectors, be certain that they are either unplugged or connected to a loop so that they do not cause interference with the function of the machine. If the motor turns, but nothing moves, reverse two poles of a three-phase power source, and/or verify that the bypass valve is closed. To check the bypass valve, verify that the round black knob near the hydraulic hose connection point on the pump is not toggled to the bypass position. See drawing HTC35 ST on page 12.

Install Accessory Items

1. After all basic functions are verified, and adjustments made, connect any accessory or external control wiring.

2. Vehicle detectors: If vehicle detectors are to be used, review the section pertaining to detector loop sizing and layout.

3. Button station operation: Install the push button control within sight of the gate arm. Be certain the opening is clear before closing gate. Mount a sign, which advises that the area be clear before operation, adjacent to button station.

4. Protection: Mount a photo eye below the arm and/or an edge sensor to the leading edge of gate according to its manufacturers specifications.

Install Warning Signs And Safety Information Labels

1. Be sure to install all of the warning signs or labels that were supplied with this operator. If these labels have been misplaced or lost, call your local distributor or the factory for replacements.

Components of the Barrier Arm Gate Operator

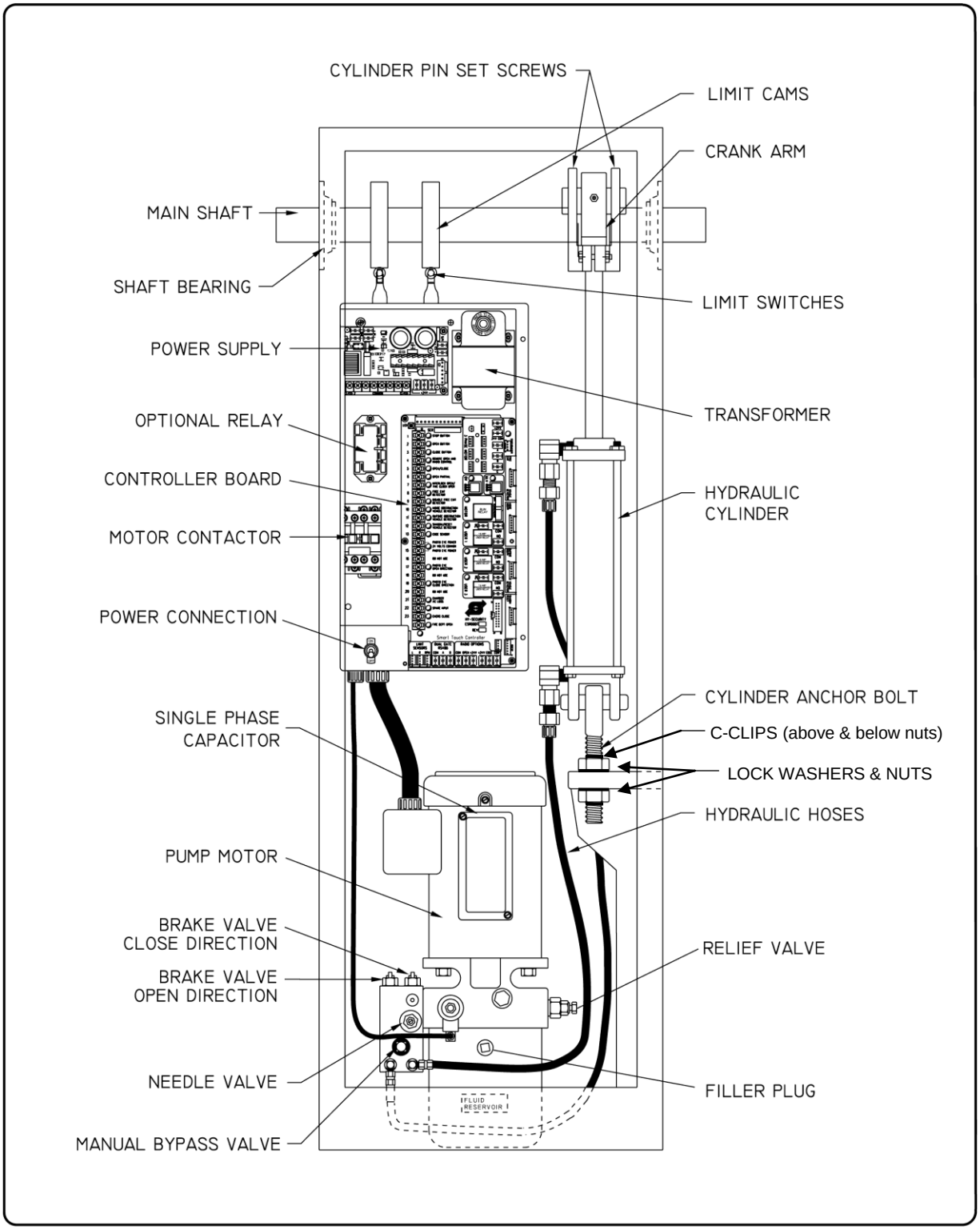

SEATTLE, WASHINGTON	TITLE COMPONENTS HTG 320 BARRIER ARM OPERATOR	DRAWN D. B.	DATE 05/12/00	THIRD ANGLE PROJECTION	REV A
		CHECKED -	DATE -	ERN NUMBER - / DATE -	
		APPROVED -	DATE -	DRAWING NUMBER: HTC35 ST	SHT 1 OF 1

StrongArm (HTG 320) Adjustments

The StrongArm (HTG 320) gate operator is pre-adjusted at the factory to perform correctly with the barrier arm shipped. If the arm length, or weight is changed, it may be necessary to re-adjust the gate operator to perform correctly. To properly adjust the StrongArm gate operator, perform all adjustments in the sequence listed. **Be certain to disconnect the power before performing any adjustments!**

Arm Leveling: To adjust the gate arm with the threaded eyebolt at the base of the hydraulic cylinder (see drawing HTC35 ST on page 12), take the following steps:

CAUTION: DO NOT remove the pin from the eyebolt. Neither the hydraulic cylinder nor the eye bolt needs to be removed to adjust the gate arm height.

1. With the gate in the closed position, use a needle-nose pliers to remove the top and bottom safety C-clips from the eye bolt.
2. Use a 1½-inch wrench to loosen the top nut to release tension on the eye bolt.
3. Move the gate arm and stabilize it at a level position.
4. To maintain the level position, hand-adjust the bottom nut up or down.

   Note: You may initially need to unscrew the bottom nut to allow the gate arm to reach a level position.
5. To lock the gate arm's level position, tighten the top nut. Nut torque should be at least 100 ft-lbs to prevent loosening during extended operation.
6. Re-insert the top and bottom safety C-clips so a gap (less than 1/8 inch) is between the nut and C-clips.
7. Run a gate test by cycling the gate arm open and closed.
8. If the arm height needs further adjustment, repeat steps 1 through 7.

Balance: Before adjustments can be performed correctly, the operating weight of the arm must be verified to be within the proper range for this machine. NOTE: All arms longer than 18' require counterweight. If this is a new installation using a factory supplied arm, and no additional components have been added, this test is not required because the factory has already provided the correct counterweight for the arm as ordered. To determine the operating weight of the arm, first pull and twist release the manual bypass valve (see drawing HTC35 ST on page 12), then manually lift the arm from a position ten feet distant from the operator. The arm should appear to weigh forty pounds, or less, regardless of the length or actual weight of the arm. If the operating weight of the arm is heavier than our maximum specification, the operator is overloaded which adversely affects both automatic and manual operation. The only remedy for an arm that is too heavy is to reduce the length of the arm, or add additional counterweight.

Limit Switches: For the arm to stop smoothly, when opening or closing, the limit switches must trip approximately ten degrees before the arm achieves full travel. If adjustments are necessary, use an Allen wrench to adjust the cam collars on the drive shaft (see drawing HTC35 ST on page 12).

Brake Valves: When the limit switches are correctly set to trip a little early, the speed of the barrier arm may decelerated to allow smooth stops. The rate of deceleration is adjusted by the red colored brake valves, one for each direction of travel. The brake valve closest to the electric motor controls the close direction (see drawing HTC35 ST on page 12). The brake valve on the left controls the open direction. If adjustment of a brake valve is necessary, loosen the 9/16" lock nut and turn the adjuster screw, in ¼ turn increments, with an Allen wrench. The adjustment works opposite of typical, such that a counter-clockwise will stop the arm more rapidly. The correct brake valve adjustment will allow the arm to smoothly stop just before the arm reaches full travel. Tighten the 9/16" lock nut on the brake valve when complete.

Note 1: The brake valves do not control the closing of the arm when the manual bypass knob is pulled. For adjustment of the manual mode, see step #3 on page 14.

Note 2: Careful adjustment of the open limit switch and brake valve may be especially important in installations where there is truck traffic and the gate operator is close to the edge of the road. Be aware that the later the open limit switch trips when the gate is opening, the sooner the open circuit will be able to accept a safety reverse when the arm is closing. The best adjustment requires a rapid, but smooth, stop of the arm at the end of the open cycle.

StrongArm (HTG 320) Manual Operation

A bypass valve has been provided that can override the hydraulic lock that normally secures the arm from being lifted. In the event of a power failure, manual operation is achieved through the following procedure.

1. Find the manual bypass valve with the black round knob, which is located on the hydraulic pump just above where the hoses connect. (See drawing HTC35 ST on page 10). Pull and twist the valve to engage the manual mode. The barrier arm can now be manually lifted, beginning from the tip, by moving “hand over hand” while walking towards the operator. When the arm is open, be certain to close the bypass valve to prevent the arm from drifting down.

2. The arm can be manually closed with the same procedure, except that once manually started, the arm will fully close itself due to the force of gravity.

3. To regulate the speed of closing, during manual operation only, there is a needle valve for flow adjustment, which is located just above the manual bypass valve (see drawing HTC35 ST on page 10). If adjustment is necessary, loosen the lock nut and turn the adjuster stem clockwise to slow the rate of manual closure. The correct adjustment allows the arm to close at a moderate speed and stop without excessive bouncing at the fully closed position.

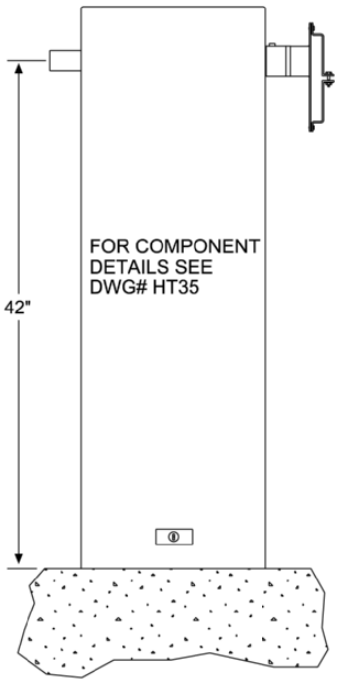

DOOR SIDE
ELEVATION

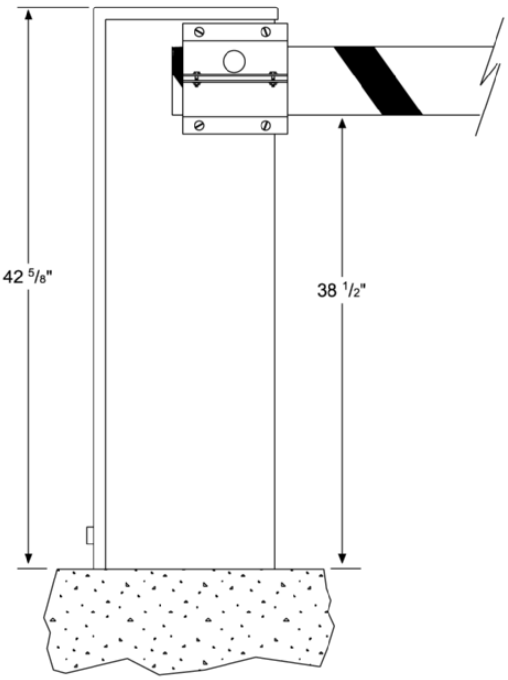

SIDE
ELEVATION

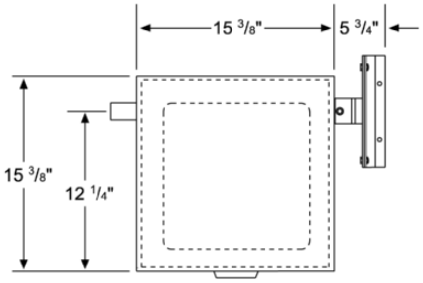

PLAN VIEW
DOOR SIDE
(COVER IN PLACE)

ROAD SIDE

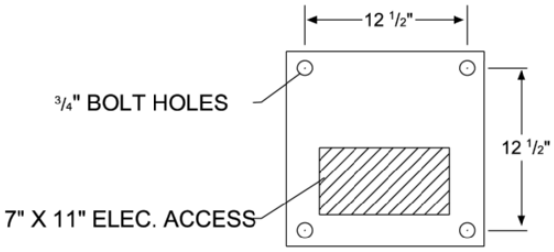

NOTE:

ARM BRACKET CAN ATTATCH
ON LEFT OR RIGHT SIDE.

NOTE:

MINIMUM RECOMMENDED SLAB
20" X 20" X 20" OR TO THE
FROST LINE, IF DEEPER.

seattle, washington	TITLE SINGLE WOOD ARM MOUNTING BRACKET UP TO 14' MAXIMUM	DRAWN KERI	DATE 7/3/00	THIRD ANGLE PROJECTION	REV --
		CHECKED SHOP	DATE MM/YY/DD	PART NUMBER N/A	
		APPROVED ENGRNG	DATE MM/YY/DD	DRAWING NUMBER: HT17	SHT 1 OF 1

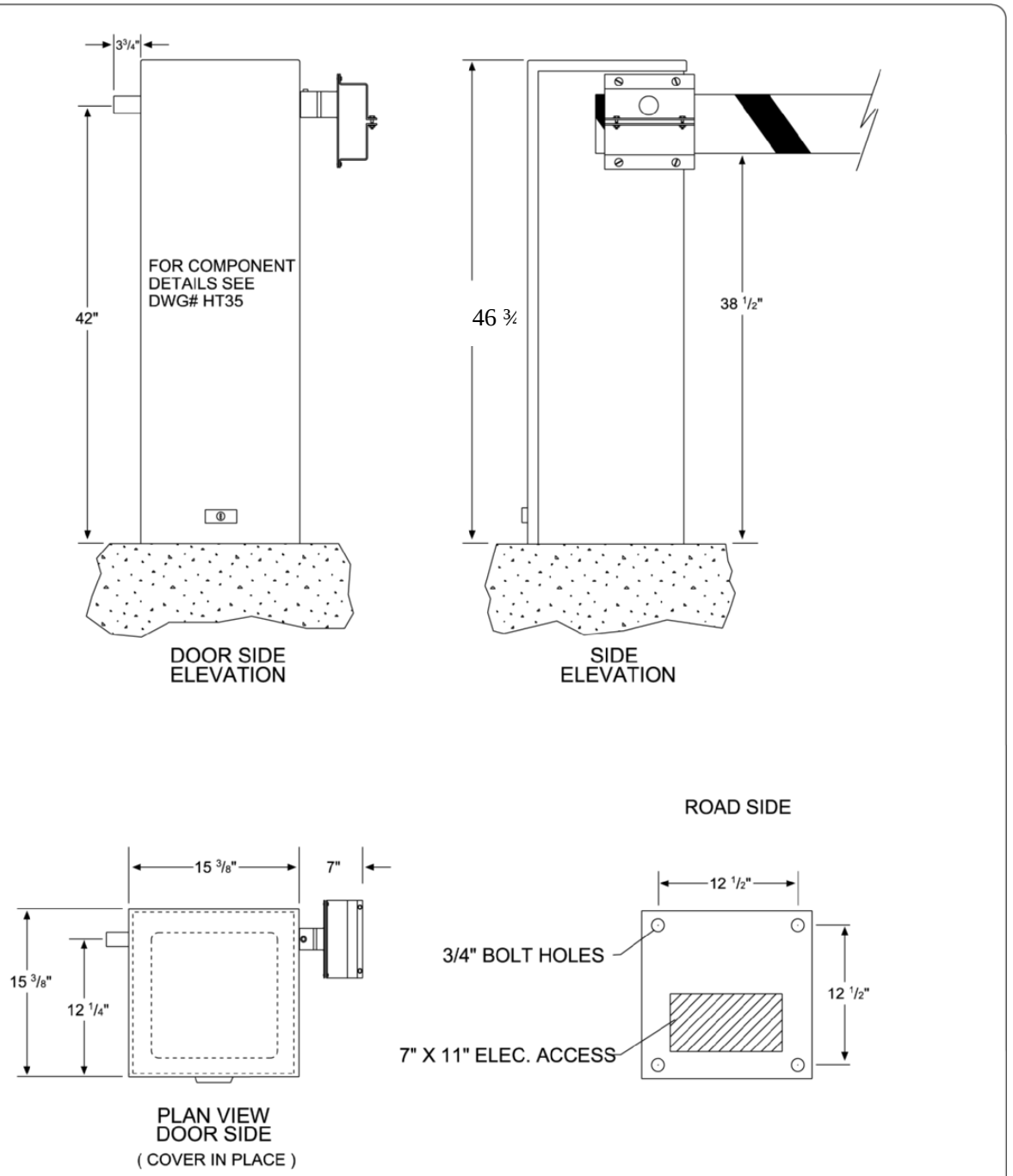

NOTE:

ARM BRACKET CAN ATTATCH ON LEFT OR RIGHT SIDE.

NOTE:

MINIMUM RECOMMENDED SLAB 20" X 20" X 20" OR TO THE FROST LINE, IF DEEPER.

seattle, washington	TITLE SINGLE ALUMINUM ARM MOUNTING BRACKET 18' MAXIMUM	DRAWN KERI	DATE 6/15/00	THIRD ANGLE PROJECTION	REV --
		CHECKED SHOP	DATE MM/YY/DD	PART NUMBER N/A	
		APPROVED ENGRNG	DATE MM/YY/DD	DRAWING NUMBER: HT18	SHT 1 OF 1

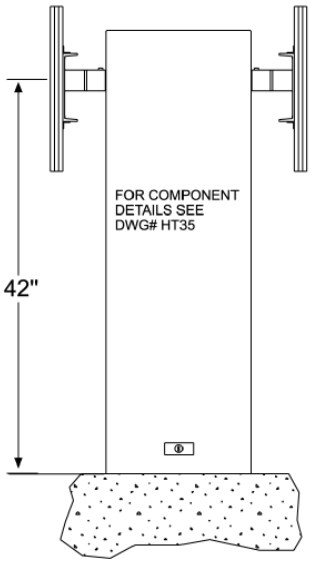

DOOR SIDE
ELEVATION

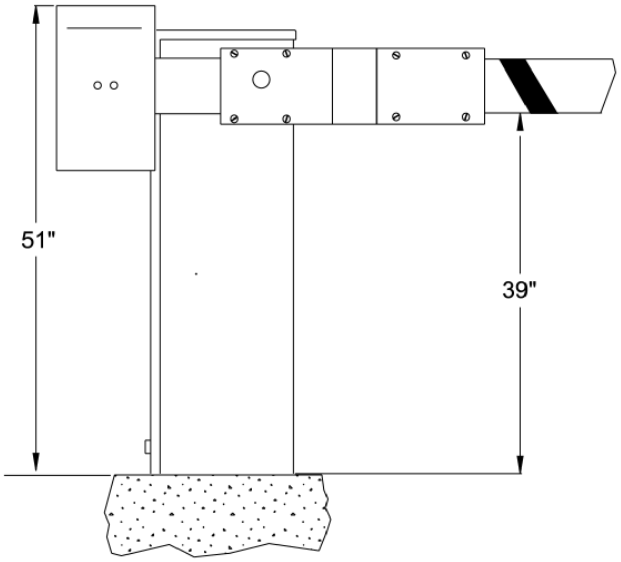

SIDE
ELEVATION

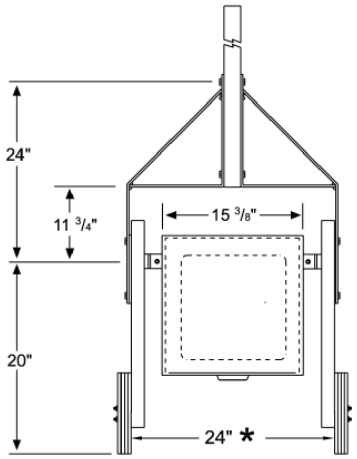

PLAN VIEW
DOOR SIDE
(COVER IN PLACE)

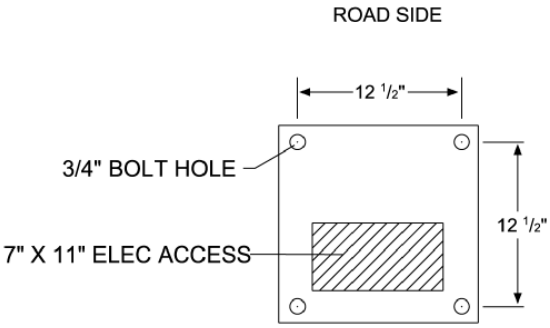

DOOR SIDE

* NOTE:
TOTAL WIDTH IS 24" + 1/2"FOR EACH COUNTERWEIGHT REQUIRED.

NOTE:
MINIMUM RECOMMENDED SLAB 20" X 20" X 20" OR TO THE FROST LINE IF IT IS DEEPER.

seattle, washington	TITLE Tubular aluminum/fiberglass arm w/counterweights 18' - 36'	DRAWN KERI	DATE 6/12/00	THIRD ANGLE PROJECTION	REV --
		CHECKED SHOP	DATE MM/YY/DD	PART NUMBER N/A	
		APPROVED ENGRNG	DATE MM/YY/DD	DRAWING NUMBER: HT22	SHT 1 OF 1

Basics of Using the Smart Touch Controller System

Read this page if you are unfamiliar with using the Smart Touch Controller.

You must learn to navigate and change menu settings within the Smart Touch Controller before an installation can be completed or any control settings or function changes can be made.

Until a new operator has been configured, the controls are not functional and the display is locked in the menu mode until the User Class 1-4, has been selected. See the next page for instructions on how make this setting.

1. There are five buttons on the membrane switch pad that provide control of everything. The Open, Close and Stop buttons serve as a three-button control station, but in the Menu Mode, they become Previous, Next and Select buttons. The Program Menu button is used to both enter and exit the Menu Mode. The Reset button clears all Errors or Faults that may occur and returns the control to its normal functioning state.

2. When in a Menu Mode, changes to be made to a Menu setting are accomplished by pressing the Previous, Next and Select buttons in the following sequence:

    a. Press the Next button to move forward through the list of menu items that are available, as shown on pages 23 & 24, or press the Previous button to move back to an item that you recently passed.

    b. Press the Select button if you wish to make a setting change to a menu item. The menu item will flash to indicate that its setting is ready to be changed.

    c. Press Next to move forward or Previous to go back to an earlier setting choice.

    d. When you have located the setting that you want to use, press the Select button and the program will accept the change and stop blinking.

    e. The Program Menu button does not allow an exit to Run Mode while a selection is still blinking. Press the Select button to stop the blinking, then you may exit to Run Mode.

    f. Pressing the Next or Previous buttons when the menu item is not blinking will move to the next or previous menu item.

    g. When done, press Program Menu to exit to the Run Mode.

3. Once configured, the operator will be in the Run Mode. From the Run Mode, to gain access the User Menu or the Installer Menu, follow these steps:

    a. Note that the Program Menu button will not function unless the gate is at rest and no open or close inputs are active. Verify system status by pressing the LED button to disclose any active inputs. There also must not be any Alerts, Faults or Errors. Press the Reset button to clear the system if necessary.

b. Press the Program Menu button and watch the LCD scroll the system data, or press the Program Menu key a 2nd time to skip the scroll. The scrolled data displays the information in the table on page 23.

c. The LCD display scroll will stop at the menu item for the auto close timer setting [Ct __]. This is the first item in the User Menu.

d. To access the more detailed Installer Menu, the system must first be in the User Menu, and then simultaneously press the Reset button and the Open button. (Early software versions require that the Menu button be pushed first and held while the Reset button is pushed, then both buttons can be released) The LCD will change to display the UL usage class menu item [uC __] This is the first item in the Installer Menu.

4. Pressing the Program Menu button when the User or Installer Menu is not blinking will return the system to the Run Mode.

Installation Configuration for Smart Touch Controller for HTG

Basic Configuration and Setting of the Usage Class

1. Turn on the power switch and observe that the LCD will first show the software version, and then stop at a steady display within two seconds. If the display reads [uC 0] go to step 2. If the operator has previously been configured, the Installer Menu must be accessed in order to reach the system configuration menu items: see step 3(d) at the top of this page.

2. When turning on the power for a new machine, the LCD display directly enters the Installer Menu at the [uC __] menu item, which is for selecting the user class as defined by UL. Select [uC 1] - [uC 2] - [uC 3] or [uC 4] depending upon the use application. See the entrapment Protection Section for UL usage class definitions.

3. Once the usage class is set, you may want to configure some other menu items before exiting the Installer Menu. The table below contains some common installer configuration items typical for a barrier arm gate.

4. When ready to exit the installer Menu. press the Program Menu button. The LCD display jumps to the close timer [Ct__] setting in the User menu, which may now be set. Either press the Program Menu button again to exit to normal run mode or set the close timer by the same programming sequence described at the previous page.

5. **Note that the Installer menu cannot be exited by any means until the selection for the UL usage class [uC __] has been entered.**

Wiring Control Inputs to the Smart Touch Controller

1. Test open and close before wiring the external control inputs. This makes it easier to troubleshoot if an unexpected functionality arises. “New Generation” Smart Touch Operator inputs (after Sept. 2006) use an LED to indicate when it is active. DC operators operating without AC require you to push and hold an LED button to disclose input status. This button is in bottom corner near the Fire Department Open input. [**“**Classic,” pre-Sept. 2006 operators LEDs are only lit when you push the Tact button. The Tact button is located on the top left corner, near the Stop Button input on the Classic Board.]
2. All the control device inputs listed below are shown as a single input. The 2nd wire is connected to the Common Terminal Buss on the Power Supply board. The Emergency Close and Fire Dept. Open inputs are an exception and require a +24 Volt input. The +24 is located on the spade terminals next to the Common Buss. See pictures on the next page.

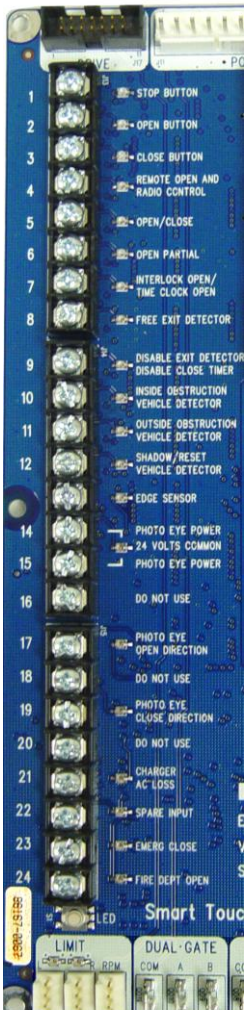

Smart Touch Controller Inputs

1.	***Stop Push button** N.C. input, jumper to Common if unused
2.	***Open Push Button** Not for radio or remote access controls
3.	***Close Push button** Not for radio or remote access controls
4.	**Remote Open & Radio Control** For radio / remote open device – Program to also Close using Smart Touch menu
5.	**Open/Close button** Pushbutton or radio controls
6.	**Partial Open** (This input disabled on barrier arm gates)
7.	**Open interlock input or Time clock Open** Menu configurable
8.	**Free Exit vehicle detector**
9.	**Disable Free Exit vehicle detector or Timer to Close** Free Exit is only disabled when Close Limit Switch tripped
10.	**Inside Obstruction vehicle detector** Inside reversing loop
11.	**Outside Obstruction vehicle detector** Outside reversing loop
12.	**Reset vehicle detector** (Closing loop under arm)
13.	**Edge Sensor** One input works for both travel directions
14-15.	**Photo eye Common Power** Supply for PE power & PE Com
17.	**Photo eye Open direction**
19.	**Photo eye Close direction**
21.	**Charger AC power loss** Only used in DC, battery type operators
22.	**Spare Input** Software ≤ h3.26,- non functional, **Gate Lock Interlock Input** Software > h3.26, prevents start until external gate lock releases
23.	****Emergency Close** Must menu enable and input +24 Volts to trigger. Overrides photo eyes, gate edge & vehicle detectors.
24.	****Fire Dept. Open** Must menu enable and input +24 Volts to trigger. Overrides photo eyes & gate edge.

***Do not connect an external control to terminals #1, 2 or 3, unless controls are located in clear view of the entire gate area. Out of sight controls: use input terminals #4, 5, 6 or 7.

****The Emergency Close and Fire Dept. Open inputs are to be used only if access to these controls is guarded such that there is always supervision when activated.

"New Generation" Smart Touch Board

Runs software 4.xx and higher

INPUTS

1. Stop Buttor
2. Open Buttor
3. Close Buttor
4. Remote Open & Radio Contro
5. Open / Close
6. Open Partia
7. Interlock Open / Time Clock Oper
8. Free Exit Detecto
9. Disable Exit Detector / Disable Close Time
10. Inside Obstruction Vehicle Detecto
11. Outside Obstruction Vehicle Detecto
12. Shadow / Reset Vehicle Detecto
13. Edge Senso
14. Photo Eye Power (-) 24 Volts Commor
15. Photo Eye Power (-) 24 Volts Commor
16. DO NOT USE
17. Photo Eye Open Directior
18. DO NOT USE
19. Photo Eye Close Directior
20. DO NOT USE
21. Charger AC Loss
22. Gate Lock Interlock
23. Emergency Close
24. Fire Department Oper

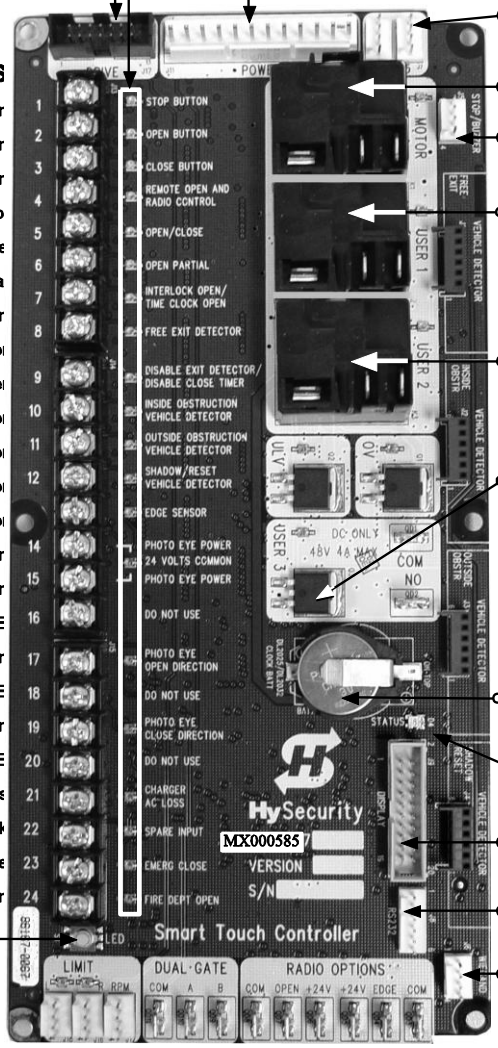

Power Supply Board

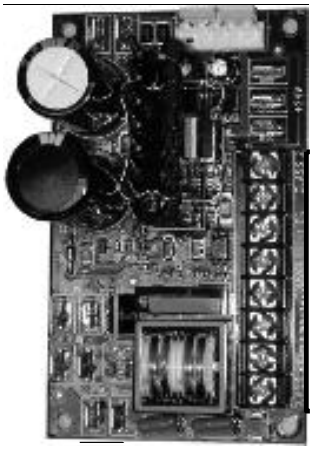

HY-5A Vehicle Detector

Connecting a Master / Slave Pair

Configuring two operators to be a Master & Slave pair is easy with the Smart Touch Controller. There is no need to order a special model or any adapters. The area of the board marked Dual Gate employs a 3-wire RS485 serial port for communication between Master & Slave operators.

1. An electrical conduit for the interconnecting wires must span between the two operators.

2. Complete the installation of both of the operators as separate machines and verify that their basic functions are correct as solo operators before interconnecting them.

3. The two gate operators should be supplied by home runs from separate 20 Ampere circuit breakers in the main panel, but if there is only one circuit, be absolutely certain that the breaker and wire size is sufficient for the load of two motors. See the Appendix.

4. External control inputs, vehicle detectors and entrapment protection sensors may be connected to either gate operator without regard to preference.

5. To interconnect the two operators, route a shielded twisted triple cable wire between the electric control boxes and connect to the RS485 Dual Gate terminals, in matching order on both machines: In the RS485 shaded area connect the terminals for Master Com to Slave Com, Master A to Slave A and the Master B to Slave B using the insulated trio of wires. Connect the shield to a solid ground at either the Master or the Slave unit (Do not ground both ends). Cut off the shield and insulate (tape) the exposed strands at the other operator.

6. The Installer Menu in each machine must be set as a Master or a Slave under menu item [dg__]. Set one operator as a Slave [dg_1] and the other as a Master [dg_2]. If the function of any external input is to be different than the factory default, configure for the desired function on the operator where that input is connected. Internal functions, such as the close timer or reversal distance, are controlled by the Master operator regardless of the settings in the Slave.

7. Once set as a Master or a Slave the operators will be in constant communication with each other. If that communication stops because the wires become severed or one operator is turned off, both machines will cease functioning and the LCD will display Err4, which is a Master/Slave communication error. This error cannot be reset until both machines are functional and communicating properly again.

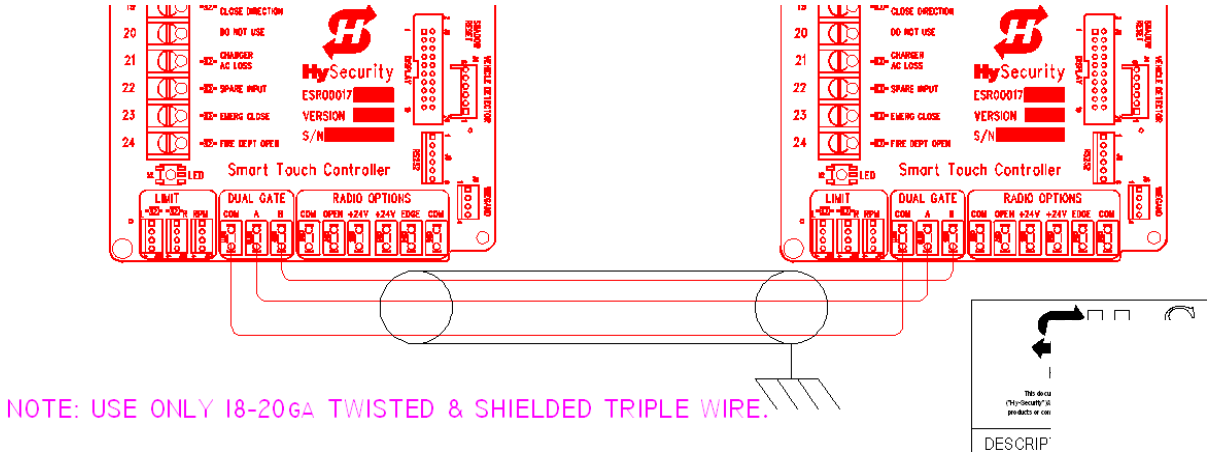

Smart Touch Controller User Menu Settings for StrongArm

Initial Power Up – When power is turned on, the display will disclose the software revision:

Display Revision Number	2s delay	Displays software version Number, ex. [h3.02]

System Data and accessing the User Menu Settings:
If the gate is stopped in normal mode, pressing of the **Menu button** accesses the User Menu. After the menu button is pressed, the LCD will scroll the system data in the table below. The scrolling display stops at the close timer setting, which is the beginning of the User Menu. To exit the Menu Mode, the display must not be blinking, then simply pressing the Menu button will return the display to the Run Mode and re-enable the controls. The menu mode will also automatically return to the Run Mode if there is no activity for two minutes.

	Data Displayed in Scroll	Time	Description
S1	[SLAu] *or* [LEAd]	*2s*	*SLAVE Operator or LEAd Operator (master)*
S2	[ot 4] Gate type (1-5)	2s	Operator type: 1=222, 2=HRG, 3=HVG, 4=HTG
S3	[uC _] UL usage class (1-4)	2s	Installer setting of usage class: type 1-4
S4	[d___] 24VDC Buss Voltage	2s	Actual VDC buss voltage
S5	[CC__] Life cycle counter	2s	High digits of 6 digit life cycle counter
S6	[____] Life cycle counter	2s	Last 4 digits of 6 digit life cycle counter

Read through the options available in the User Menu and the Installer Menu on the next page and you can see that the functions of this gate operator can be configured to suit most any specific need. Once you have learned to navigate the menus, as described in #2 on page**Error! Bookmark not defined.**, and how to change a menu setting, the full range of features and choices of the Smart Touch Controller are available to use. The User Menu contains the basic configuration items and the Installer Menu contains the more advanced menu items.

User Menu Options		Default	Description
U1	*[Ct 0] Close timer setting*	0	*0 = Close timer off or 1 – 99 seconds*
U2	[hC 0] Momentary Close	0	0 = momentary, 1= Constant hold PB required
U3	[ho 0] Momentary Open	0	0 = momentary, 1= Constant hold PB required
U4	*[AP 0] AC Power loss function*	0	*0 – 3 (0 =Type A, 1 = B, 2 = C, 3 = D) See page 48*
U5	[ro 0] Radio control option	0	0 = Open only, 1 = Adds close ability when full open
U6	*[bF 2] Warn before operate*	0	*0 =off, 1 = Buzzer alerts 3 seconds before + in motion, 2 = Buzzer alerts 3 sec before + 2 seconds in motion*
U7	[FA 0] Forced open Alert and automatic gate reposition	0	0 = off, 1 sound buzzer (2 pulses/sec) if forced open for more than four seconds, time out in 30 Sec
U8	[dA 0] Drift Closed Alert and automatic gate reposition	0	0 = off, 1 sound buzzer (2 pulses/sec) if drift closed and cannot reopen within four seconds.
U9	[PE 0] Photo Eye Align Mode	0	0= off, 1 = on (auto off when close limit triggered)
U10	[CL 0] Clock set (24 hour type)	0	0= display, 1= set mins, 2= set hours, 3= day, 4= month
U11	[Ld 5] LCD Contrast set	5	1 - 9 = Adjusts contrast of the display
U12	[dS 0] Data Log (New Gen only)	0	0 = Std. 1 = Extended (reset to 0 in 24 hr) (V4.xx software)

Note: The Warn before operate buzzer is an accessory item for the HTG operator.

These Notes Refer to the Menu Above:

S1 Appears only if the operator is configured as a master or a slave unit
U1 Close timer setting does not appear when set for constant contact close to function
U4 Power loss function only appears if factory has provided DC type operator
U6 The Warn before operate buzzer is available as an accessory item for the HTG operator.

Smart Touch Controller Installer Menu Functions

The Installer Menu can be accessed only by entering the User Menu first, and then by **pressing the Reset button and the Open button** simultaneously (some older software requires the Reset button be pressed first and held while the Open button is pressed).

The following table is the menu options for the StrongArm Barrier Arm gate operator. Note that this menu adds several items not used in our other gate operators. The most useful additions are several optional control functions for the Reset Loop Detector, which is the loop directly under the barrier arm. Note:

I18 [Cr__] Controls whether the reset loop stops only or reverses for a tailgating vehicle.
I19 [Cb__] Allows bi-directional use by disabling the free exit loop when a vehicle enters.
I20 [CP__] Adds an open input counting function that allows the arm to stay open until a 2nd car exits. This is useful to not trap the 2nd vehicle if the open input has some kind of anti-passback function.
I21 [Eb__] Allows the free exit loop to generate a close command when cleared.

	Installer Menu Options	Default	Description
I1	*[uC 0] Set UL Usage Class*	0	*0 = Gate disabled, Set Class 1 through 4 use*
I1a	*[bu 0] Choose Buzzer*	*0*	*0 = Buzzer not set, 1 = Freq 1, 2 = Freq. 2*
I2	[Fd 0] Load Factory Defaults	0	0 = User Settings, 1 = Load defaults (resets entire menu)
I3	[dg 0] Set Master/Slave type	0	0 = Solo operator, 1 = Slave unit, 2 = Master unit
I4	*[Ch 0] Set AC Charger or Solar*	0	*0 = DC + AC charger, 1 = DC + Solar charger*
I5	[Fo 0] Enable Fire Dept. Open	0	0 = input disabled, 1 = enabled
I6	[oC 0] Enable Emergency close	0	0 = input disabled, 1 = enabled
I7	[SE 3] Inherent Sensor sensitivity	3	1 = Maximum sensitivity, 9 = Lowest sensitivity
I8	*[SS 0] Inherent Sensor function*	0	*1 = stop only (note, functions in usage class 4 only)*
I9	*[LC 0] Leaf delay Close*	0	*0 = none (1-7) ½ second steps (Master/Slave only)*
I10	*[Lo 0] Leaf delay Open*	0	*0 = none (1-7) ½ second steps (Master/Slave only)*
I11	[rt 0] Maximum run timer	0	0 = 60 Seconds max run, 1 = 300 Seconds max run
I12	[EC 0] PEC reverse to open	0	0 = Close eye stops only, 1 = 2 sec reverse to open
I13	[PC 0] Set PEC output – NO/NC	0	0 = Normally Open PE output, 1 = N.C. (Supervised mode)
I14	[gC 0] Set Edge input – NO/NC	0	0 = Normally Open Edge output, 1 = Normally Closed
I15	[tC 1] Time clock/ Interlock input	1	0 = select Time Clock, 1 = select Open Interlock
I15a	[dt 0] Disable Free Exit/Close timer	0	0 = disable Free Exit, 1 = disable Close Timer
I16	[or 1] OOLD detector function	1	0 = pause closing only, 1 = enable reversing to open
I17	[ir 1] IOLD detector function	1	0 = pause closing only, 1 = enable reversing to open
I18	[Cr 1] RLD -Reset detector function	0	0 = Reopen if tripped while closing, 1 = Pause only
I19	[Cb 0] RLD -Reset detector function	0	0 = One way, 1 = Bi-directional - disables ELD if tripped first
I20	[CP 0] RLD -Reset detector function	0	0 = Std. Close, 1 = Count opens & closes after equal reset
I21	[Eb 0] ELD –Exit detector function	0	0 = Off, 1 = Enable ELD back off auto close feature
I22	[r1 0] User relay 1 option	1	0 = disabled, 1 – 24 = see relay output options page 28
I23	[r2 0] User relay 2 option	6	0 = disabled, 1 – 24 = see relay output options page 28
I24	[r3 0] User relay 3 option	1	0 = disabled, 1 – 24 = see relay output options page 28
I25	*[tL 0] Gate Open alert*	2	*0 = 0 sec, 1= 15s, 2= 45s, 3= 75s, 4= 105s, 5= 135s*
I26	*[Lt 0] Loitering alert*	3	*0 = 0 sec, 1= 15s, 2= 45s, 3= 75s, 4= 105s, 5= 135s*
I26a	[SA0] System address	0	0 = no network, 1-99 = network "net" address
I27	[ELd0] Test factory ELD	0	0=Run, 1=show freq, 2=show call level 0-7, 3= set Freq 1-4
I28	[iLd0] Test factory IOLD	0	0=Run, 1=show freq, 2=show call level 0-7, 3= set Freq 1-4
I29	[oLd0] Test factory OOLD	0	0=Run, 1=show freq, 2=show call level 0-7, 3= set Freq 1-4
I30	[rLd0] Test factory RLD	0	0=Run, 1=show freq, 2=show call level 0-7, 3= set Freq 1-4

These Notes Refer to the Menu Above:

I1 *This setting must be configured or the gate cannot function and menu will not exit.*
I4 *This setting appears only if the factory has provided a DC powered gate operator*
17-I8 *StrongArm (HTG models) do not have Inherent Entrapment Sensor (IES)*
I9-10 *These settings appear only if the Installer Menu is set for Master / Slave function*
I25-26 *These settings appear only if the Installer Menu has set relays* r1-r3 *for these alerts*

Description of Functions Available in the User Menu

User 1 [Ct _] **Close timer setting:** This menu item is the automatic close timer for the gate. The factory setting is zero, which is off. It may be configured up to 99 seconds.

User 2 [hC 0] **Momentary Close:** This menu item is to configure for the system for constant hold push button Close function. The factory setting is zero, which is momentary contact input.

User 3 [ho 0] **Momentary Open:** This menu item is to configure for the system for constant hold push button Open function. The factory setting is zero, which is momentary contact input.

User 4 [AP 0] **Power loss function:** This menu item only appears if the operator is a DC battery powered version. This item is to configure what gate function will occur when the AC power fails. See the two part operator section for more detailed information on DC operators.

User 5 [ro 0] **Radio control option:** This menu item is to configure whether a radio input can open only (default) or if set to 1, also has the ability to close the gate, but only when it is fully open.

User 6 [bF 2] **Warn before operate:** This menu item controls the optional accessory warn before operate buzzer and can be configured three ways. Set to zero to turn the buzzer off, never cut the wires to the buzzer or unplug it. Set to 1 and the buzzer will sound three seconds before motion and the entire time during gate motion. Set to 2 (default) and the buzzer will sound three seconds before motion and for the first two seconds of motion.

User 7 [FA 0] **Forced open Alert and automatic gate reposition:** This function is intended for highly secure facilities. If it is enabled, by setting the selection to 1, it will reinitiate a closure if a gate is somehow forced to open far enough that the close limit switch releases. The Alert buzzer will sound immediately, even if it had been turned off, and the motor will restart to secure the gate fully closed. If the gate is not fully closed within four seconds the motor turns off and the alert buzzer sounds an intruder alert for thirty seconds. The LCD display reads ALE1.

User 8 [dA 0] **Drift Closed Alert and automatic gate reposition:** If it is enabled, by setting the selection to 1, it will restore a gate to back its fully open position if it drifts closed for any reason. The buzzer will sound a warn before operate alert, even if it had been turned off, and the motor will restart to reopen the gate. The motor will run for a maximum of four seconds and if the gate is not fully open in this period, the buzzer sounds for ten seconds and the LCD display reads ALE2.

User 9 [PE 0] **PE Alignment Mode:** When activated, the buzzer chirps as the photo eye is triggered or released as an aide to photo-eye emitter / receiver alignment.

User 10 [CL 0] **Clock and date set:** The Smart Touch Controller is equipped with a 24 hour 365 day clock, so that events of significance can be logged and stamped with the time and date. This feature is useful to record historical operation data, which can be accessed via the RS232 port. To set or adjust the hour, minute, day or month, see page 29.

User 11 [Ld 5] **LCD Contrast set:** Under some extreme high or low temperature conditions, it may be necessary to adjust the contrast of the LCD display. The display is adjustable from 0-9 with a factory default setting of 5.

User 12 [dD 0] **Extended Data Log:** When set to 1 the Smart Touch Controller logs additional events within the Smart Touch Controller in addition to the normal error and alert logs. This parameter resets to 0 automatically after 24 hours – (Requires New Generation Smart Touch board and V4.xx software)

Description of Functions Available in the Installer Menu

Installer 1 [uC 0] **Set UL Usage Class:** This menu item is used to set the UL usage class, which must be set by the installer before the operator will function. See page 19, step 2.

Installer 1a [bu 0] **Select Buzzer Type:** This menu item selects the type of audible buzzer installed on the machine. To set, push SELECT on the keypad, the display will flash 0, push OPEN and note the buzzer volume. Push OPEN again and note the buzzer volume. If this tone is louder, push SELECT, if the first tone was louder, push CLOSE for the louder tone, then push SELECT to lock in the louder tone.

Installer 2 [Fd 0] **Load Factory Defaults:** This menu item is used to globally restore all menu settings back to new machine status. To activate, change the setting 0 to 1 and push the Menu button. The UL usage class and the hand configuration will need to be set again.

Installer 3 [dg 0] **Set Solo, Master or Slave type:** This menu item is used to configure an operator as a Master or a Slave operator in Master/Slave paired gate installations.

Installer 4 [Ch 0] **Set AC Charger or Solar:** This menu item only appears on 24 VDC battery machines only and is set to solar only when there is no AC battery charger.

Installer 5 [Fo 0] **Enable Fire Dept. Open:** This menu item is used to enable the Fire Dept. Open input. When set to [Fo_1] this input will override vehicle detectors, photo eyes and gate edges to open a gate. A reset input is required before the gate can be closed.

Installer 6 [oC 0] **Enable Emergency Close:** This menu item is used to enable the Emergency Close input. When set to [oC_1] this input will, with a constant hold input, override vehicle detectors, photo eyes and gate edges to close a gate. A reset input is required before the gate can be opened.

Installer 7 [SE 6] **Inherent Sensor sensitivity:** This menu item does not apply to HTG models.

Installer 8 [SS 0] **Inherent Sensor function:** This menu item does not apply to HTG models.

Installer 9 [LC 0] **Leaf delay Close:** This menu item only appears if the operator is set up as a Master or a Slave. Available settings are 1-7. Each increment adds ½ second, to a maximum of 3 ½ seconds time delay, before the operator activates when commanded to close.

Installer 10 [Lo 0] **Leaf delay Open:** This menu item only appears if the operator is set up as a Master or a Slave. Available settings are 1-7. Each increment adds ½ second, to a maximum of 3 ½ seconds time delay, before the operator activates when commanded to open.

Installer 11 [rt 0] **Maximum run timer:** The maximum run timer has a default setting of 60 seconds. This menu item allows an optional setting of 300 seconds, if changed to [rt_1].

Installer 12 [EC 0] **PEC (photo eye close) reverse to open:** The default for this menu item is for non-reversal if the close photo eye is triggered. The optional setting of [EC_1] will cause the gate to reverse to open for two seconds if triggered while closing.

Installer 13 [PC 0] **Set PEC – NO/NC:** The default for this menu item is for photo eyes with Normally Open outputs. The optional setting of [PC_1] will require a Normally Closed output. If set for N.C. the connection is also supervised and any open or short circuit fault will generate a FAL2 alert, which requires a Stop button reset to re-enable any function if triggered.

Installer 14 [gC 0] **Set Edge input – NO/NC:** The default for this menu item is for edge sensor with Normally Open outputs. The optional setting of [gC_1] will require a N.C. output.

Description of Functions Available in the Installer Menu

Installer 15 [tC 1] **Time clock / Interlock input:** This menu item configures the input at terminal #7 to be either for the gate interlock function or for an external time clock to open input. The default setting is [tC_1] for the interlock function.

Installer 15a [dt 0] **Disable Free Exit / Close timer:** This input configures the input at terminal #9 to disable either the Free Exit Detector on terminal #8, or the Timer To Close function. Default setting is [dt 0] allowing disabling of the free exit detector.

Installer 16 [or 1] **OOLD (Outside Obstruction loop detector) function:** The default for this menu item is for full reversal when the OOLD is triggered. The optional setting [or_0] causes the gate to only pause when triggered. Closure begins as soon as the loop is clear again.

Installer 17 [ir 1] **IOLD (Inside Obstruction loop detector) function:** The default for this menu item is for full reversal when the IOLD is triggered. The optional setting [ir_0] causes the gate to only pause when triggered. Closure begins as soon as the loop is clear again.

Installer 18 [Cr 0] **RLD (Reset loop detector) function:** The default for this menu item allows the arm to reopen if the reset loop detector is triggered during closure of the gate. The optional setting [Cr_1] allows the reset loop detector, if triggered, to only pause the arm during its closure.

Installer 19 [Cb 0] **RLD (Reset loop detector) function:** The optional setting for this menu item allows an RLD input to disable the free exit detector (ELD) until the gate is fully closed. This is used for bi-directional traffic. The default function allows normal operation of the free exit detector.

Installer 20 [CP 0] **RLD (Reset loop detector) function:** The default for this menu item allows the reset loop detector, when triggered and released, to close the arm immediately. The optional setting [Cp_1] allows the Smart Touch system to remember an additional open count if the open input is activated a 2nd time while the first vehicle still remains over the reset loop. This option is needed when there is an anti-pass back type card reader to prevent a vehicle from being stranded.

Installer 21 [Eb 0] **ELD (Free exit loop detector) function:** The optional setting for this menu item creates an automatic close function if a vehicle triggers, than backs off the free exit loop detector. The default function allows normal latch open operation of the free exit detector.

Installer 22, 23, 24 [r1 0], [r2 0], [r3 0] **User output relay 1 - 3 programming options:** These three menu items are used to configure the function of the three user output relays. There are 19 optional choices, which are described in detail on page 28.

Installer 25 [t L 0] **Gate Open alert:** This menu item is to adjust the time delay before activating the user relay function #8, described on page 28. Time settings up to 135 seconds.

Installer 26 [Lt 0] **Loitering alert:** This menu item is to adjust the time delay before activating the user relay function #13, described on page 28. Time settings up to 135 seconds.

Installer 26a [SA 0] **System Address:** Set the system address for network communication. 0 = no network communication, 1-99 set individual poling addresses. Requires v4.24 software or higher.

Installer 27 [ELd0] **Factory ELD:** Controls the HY-5A Free Exit loop detector, see page 41.

Installer 28 [iLd0] **Factory IOLD:** Controls the HY-5A IOLD loop detector, see page 41.

Installer 29 [oLd0] **Factory OOLD:** Controls the HY-5A OOLD loop detector, see page 41.

Installer 30 [rLd0] **Factory RLD:** Controls the HY-5A Reset loop detector, see page 41.

Programmable Output Options for User Relays 1–3

The Smart Touch Controller can be set to interface to many types of external devices through the use of its programmable output relays. All of the output functions listed below are accessible in the Installer Menu under the selection [r1 __], [r2 __] and [r3 __]. Select which relay you wish to use and enter the appropriate function by the numbers as listed below. Notes: The User Relays will operate normally to less than 18VDC. The User 3 Relay

1. **Close Limit output:** This output can also be used to create an interlock signal to another operators interlock input, or simply to indicate that the gate is secure. The relay is **released** at full closure.
2. **Close limit pulse output:** This output may be used in a sequenced system to command a 2nd machine to close. Generates a brief pulsed output that occurs when the close limit is triggered.
3. **Open limit output:** This output is used to indicate a full open position indication. This output becomes active when to open limit is triggered and releases when the open limit is released.
4. **Open limit pulse output:** This output may be used to trip a sequenced barrier arm gate operator to open. Generates a brief pulsed output occurs when the open limit is triggered. An additional pulse is also generated with any new open command even when the gate is already fully open.
5. **Warn before/during operate output:** This output may be used to control an external warning device. This output will operate at the same time as the internal warn before operate buzzer.
6. **Gate Lock output:** This output may be used to control external solenoid locks or magnetic locks. In both directions of travel, this output will be activated about 7/10th of a second before the operator starts moving the gate, and remains active while moving and for a few seconds after stopping.
7. **Gate forced open output:** Alarms if the gate is forced off the closed limit switch, and operator is not able to restore the gate to full closed within four seconds. This alarm resets itself in 30 seconds.
8. **Gate open too long output:** Activates when the gate has been open longer than a user-selected period of time. Adjustable from 0 delay, then 15 seconds delay to 135 seconds delay in 15-second time increments.
9. **Safety Mode Alert output:** Activated when system is in the Safety Mode or the Entrapment Mode. Safety Mode occurs upon an impact with an obstruction. Entrapment Mode means the gate is stopped and occurs if the internal inherent sensor triggers while the system is in the Safety Mode.
10. **Entrapment Mode Alert output:** Activated only when system is in the Entrapment Mode.
11. **Unauthorized Vehicle Entry output:** Activated when a 2nd vehicle enters from the outside, without a valid input from an access control device. This output releases when an access control input signals open or the gate reaches the close limit position.
12. **Outside Obstruction Vehicle Detector output:** This output may be used to interlock to an entry device to prevent pedestrian use. This output is active whenever the OOLD is tripped.
13. **Special output from "OOLD" only when gate is closed:** Used to annunciate a vehicle or to indicate loitering. Adjustable from 0 delay, then 15 to 135 seconds delay in 15-second time intervals.
14. **Gate nearing full travel output:** For operators with RPM sensors only. This output is activated when the gate is three feet from full travel in both the open and close directions. This output can be used to reduce the sensitivity of a proximity sensor near the ends of gate travel.
15. **Gate Failure output**: This output is activated to report that a problem has occurred. Indicates that system in an Error Mode, Fault Mode or Entrapment Mode. If active, the gate is disabled.
16. **Motor Running output:** This output is active when the motor is running and the gate is in motion.
17. **AC Power Failure output:** This relay is normally energized, but drops with loss of AC power. This output is also active on DC machines when the battery charger is off.
18. **DC Power Failure output:** This output is activated when the battery power is very low, but the output ceases when the battery is dead. The relay is triggered when the battery is less than 20 Volts.

19. **Flasher Relay:** This output is intended to control flashing lights that pulse once per second. The relay is activated all the time, except when the open limit switch is triggered.

20. **Free Exit Loop Vehicle Detector output (available with h3.23 and higher software):** This output is active whenever the ELD is tripped.

21. **Inside Obstruction Vehicle Detector output (available with h3.23 and higher software):** This output may be used to interlock to an exit device to prevent pedestrian use. This output is active whenever the IOLD is tripped.

22. **Reset Loop Vehicle Detector output (available in h3.23 and higher software):** This output is active whenever the RLD is tripped.

23. **Gate Lock Output (available in h3.26 and higher software):** External gate lock output. Activates at initiation of open cycle and remains on for 10 seconds. Similar to #6 but shuts off after 10 seconds.

24. **Gate at Partial Open Position (available in h3.26 and higher software):** This output is active when the partial open position is reached or exceeded.

Clock Functions

Setting the Time and Date

The Smart Touch Controller is equipped with a 24 hour (military time), 365 day clock, so that events of significance can be logged and stamped with both the time and the date. This feature is useful to record key historical operational data and a log of Alerts, Faults and Errors all of which can be accessed via the RS232 port. Optional software and a serial communication cable are required in order to read this data*.

1. To set or adjust the time, go the User menu item [CL_0] and push the **Select button**, so that [CL_0] blinks. Using the **Previous** and/or **Next** buttons, change the setting from [CL_0] to 1, 2, 3 or 4 depending upon which setting is to be changed. 1 = minutes / 2 = hours / 3 = days / 4 = months.

2. Push the **Select button.** The display will change to a blinking (adjustable) value. Different displays will appear (see table below) based on which [CL] value is selected:

Setting	Value	Display
[CL 1]	minutes	[ni 0–59]
[CL 2]	hours	[hr 0–23]
[CL 3]	days	[dA 1-31]
[CL 4]	months	[no 1-12]
[CL 0]	Run Mode	None

3. Change the hour, minute, day or month to the desired value using the **Previous** and/or **Next buttons**, then press the **Select button** to enter the change. [CL 0] will appear.

4. To change another setting, Press the **Select button,** (display will blink), then move to that setting using the **Previous** and /or **Next** buttons and repeat steps 2 and 3 until the clock is fully set.

5. When finished, be sure [CL 0] is displayed, then push **MENU** to exit.

6. A lithium disk battery supports the clock so that the time is not lost when the main power is off. This battery should be replaced about every five years. Use a DL 2025 / DL 2032 or CR 2025 / 2032 battery.

* **S.T.A.R.T.** Configuration and Diagnostic software is available for free download at www.hysecurity.com. Serial communication cable and Serial to USB adaptor (if needed) are available through HySecurity distributors (Cable and USB Adaptor Kit Part # MX000667).

Protection Device Schematic

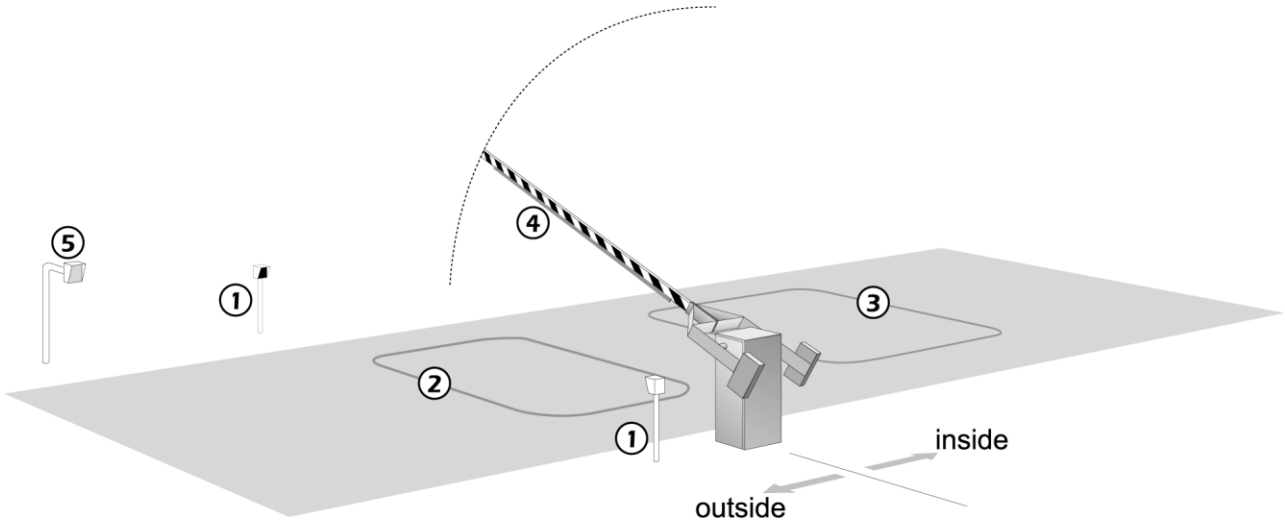

System Elements

1. Photo Eye
2. Reset Loop / Obstruction Loop Vehicle Sensor
3. Free Exit Loop Vehicle Sensor
4. Gate Edge Sensor
5. Entry Device
6. Optional Audible Buzzer

Although many optional vehicle loop sensor configurations are possible, the schematic above is provided to represent a typical system layout for a barrier arm gate. Automatic vehicular gates are for automotive use only. Be certain to design the installation such that all pedestrian traffic is directed to a separate walkway. Install signs that warn of the hazard of a moving vehicular gate.

Do not locate the barrier arm gate such that it moves within two feet of a rigid object. Even though there is an exclusion in the UL325 standard that states: “any vehicular barrier arm that is not intended to move toward a rigid object closer than 2 feet does not require protection for entrapment.” HySecurity recommends that the designer and installer employ the use of a gate edge and a photo eye in the event that a pedestrian strays into the area.

UL 325 Standard Requirements for Entrapment Protection Devices

Gate Operator Category

	Horizontal Slide, Vertical Lift, Vertical Pivot		**Swing and Vertical Barrier (arm)**	
Usage class	Primary type[a]	Secondary type[a]	Primary type[a]	Secondary type[a]
Vehicular I and II	A	B1, B2, or D	A, or C	A, B1, B2, C, or D
Vehicular III	A, B1, or B2	A, B1, B2, D, or E	A, B1, or C	A, B1, B2, C, D, or E
Vehicular IV	A, B1, B2, or D	A, B1, B2, D, or E	A, B1, C, or D	A, B1, B2, C, D, or E

Note—The same type of device shall not be utilized for both the primary and the secondary entrapment protection means. Use of a single device to cover both the opening and closing directions is in accordance with the requirement; however, a single device is not required to cover both directions. A combination of one Type B1 for one direction and one Type B2 for the other direction is the equivalent of one device for the purpose of complying with the requirements of either the primary or secondary entrapment protection means.

[a]Entrapment protection sensor types:

Type A - Inherent entrapment sensing systems.

Type B1 - A non-contact sensor (photoelectric sensor or the equivalent).

Type B2 - A contact sensor (edge sensor device or the equivalent).

Type C - Inherent adjustable clutch or pressure relief device.

Type D - An actuating device requiring continuous pressure to maintain opening or closing motion of the gate.

Type E - An inherent audio alarm, which warns a minimum of 3 seconds before operation.

UL Usage Class Information:

The automatic vehicular operator must also be labeled as appropriate for both the type and usage class of the gate. Installers must verify that the gate operator is labeled for the intended application. Note: Sliding gate operators installed in Class I & II applications must not move the gate faster than 12 inches per second.

Class I: Intended for use in a a parking area of one to four single family dwelling.
Class II: Intended for use in a commercial location or building such as a multi-family housing unit (five or more single family units) hotel, garages, retail store or other building servicing the general public.
Class III: Intended for use in an industrial location or building such as a factory or loading dock or other locations not intended to service the general public.
Class IV: Intended for use in a guarded industrial location or building such as an airport security area or other restricted access locations not servicing the general public, in which unauthorized access is prevented via supervision by security personnel.

Placement and Use of Secondary Pedestrian Entrapment Sensors

WARNING: To reduce the risk of serious injury or death, read and follow all instructions in the gate operator handbook and on the warning labels.

Automatic gate operators are intended only for vehicular use and pedestrians must be routed to a separate man gate, however sensors are still required in order to provide a degree of protection should anyone happen to stray into the area of an automatic gate. Generally there are two types of external sensors that may be used: Contact type sensors, such as an edge sensor, and non-contact sensors, such as photoelectric eyes. Except for an exclusion provided for barrier arm gates not moving within two feet of a rigid object, current standards require the use of either type or both of these sensors.

The specifier or installer may choose either photoelectric eyes or edge sensors, or use these devices in combination. The UL 325 standard for automatic gates specifically states the following:

- One or more non-contact sensors (photoelectric eyes) shall be located where the risk of entrapment or obstruction exists, such as the perimeter reachable by a moving gate.
- A hardwired contact sensor shall be located and it's wiring arranged so that the communication between the sensor and the gate is not subjected to mechanical damage.
- A contact sensor that transmits its signal to the gate operator shall be located such that the signal is not impeded by building structures or other obstructions and shall function under its intended end-use conditions.
- The contact and non-contact sensors must be tested and labeled as "Recognized Components" under the UL 325 standard in order to be deemed acceptable for use in this application.

Study the protection device schematic and consider your specific installation to determine where the greatest risks of entrapment exist. Locate edge sensors and/or the photoelectric sensors accordingly.

Installing Gate Edge (Contact Type) Reversing Sensor

1. Drill holes through the edge's mounting channel and through the bottom surface of the arm. If the arm is aluminum or fiberglass you can use pop rivets to install, on arms of wood use wood screws to securely fasten the edge sensor track. Slide the edge sensors into the track. The track itself may be supplied in multiple sections. Add as needed for your arm length.
2. Pull edge sensor leads through a hole provided in the chassis and directly connect them to the Smart Touch Control Board.
    a. Mount the gate edge so that all possible contact areas of the arm are covered.
    b. Always route the leads of the edge sensors to the gate operator so that they are protected from physical damage and given enough slack that the arm can move its full travel without stressing the leads.
    c. Connect one edge sensor lead to our Common Buss on the power supply board and the other to terminal #13, which is labeled Edge Sensor input.

Test the operation of the reversing edge to make sure that it functions correctly. Advise the user of the gate to be certain to retest this vital function weekly.

Installing Photoelectric (Non-contact) Sensors

General Information:
Follow the guidelines in the Entrapment Protection Schematic to plan the most appropriate mounting positions for the photo-eye sensors to be installed. If there are no other secondary external entrapment protection sensors (typically an edge sensor), at least one photoelectric sensor is required to serve to stop the gate if an obstruction is present.

There are two common types of photoelectric sensors, through beam and retro-reflective, each has some advantages. A through beam sensor is generally more powerful and able to function reliably with dirty optics and in poor weather. A retro-reflective sensor has the convenience of not requiring the installation and electrical wiring of the remote emitter required in a through beam system, but is generally more problematic in poor weather. Avoid use of a retro-reflective device to span a distance greater than 24 feet in an outdoor environment or performance will probably be unsatisfactory.

Compatibility:
A requirement of the UL 325 standard is that a photoelectric sensor be laboratory tested and "recognized" under UL 325. In order to be compatible with a HySecurity operator, a photo eye must be rated to function from 24 Volts DC source power.

Installation:
Mount the photo eye approximately 15" to 30" above the ground and as close to under the arm as possible. Mount the receiver portion near the operator and below the arm and mount the emitter just beyond the travel of the arm. The installation location described above is intended for pedestrian detection, if photo eyes are also to be used for vehicular detection, consider, in addition to the low elevation photo eye for cars, another photo eye at a height of about 55" to detect semi-trucks.

Configuration:
If the photo eye has an internal switch for setting Light Operate vs. Dark Operate, select Light Operate. If the photo eye has a relay output and has both NO and NC terminals, some experimentation may be required to determine the proper connection. This is because in the Light Operate mode the output relay is normally energized and releases when the beam is blocked. Some manufacturers label an output as NO, when it is actually an NC contact. If the photo eye has a solid-state output and provides the option of a sinking or sourcing connection, choose the sinking connection.

Connection:
Three wires to the receiver and two wires to the emitter are all that is required.
a. The +24 Volt source power is obtained at one of the three spade terminals on the power supply board.
b. The –24 Volt source power is obtained from our terminals #14 or 15, labeled (Photo Eye Power) on the Smart Touch Controller board.
Note: The –24 Volt Photo Eye Power also supplies the photo eye Common.
c. The photo eye NO or NC output connects to the Smart Touch Controller board at terminal #19.

Supervised Connection:
If the photo eye being installed has a true NC output (one that is NC when the photo eye is powered, aligned and set for Light Operate) then a supervised connection is recommended. A supervised connection will signal a system Fault and prevent gate operation if the photo eye connection ever becomes an open circuit or a short circuit. The Installer Menu item [PC_0] must be changed to [PC_1] to enable this feature. See Installer menu 13 on pages 24 and 26.

Installing Photoelectric (Non-contact) Sensors (continued)

Photo Eye Function:
A tripped photo eye will prevent the gate from starting in either direction if the gate is stationary. If tripped while in motion, the standard function is to pause the gate motion and then automatically restart again if the photo eye is clear within five seconds. An optional setting in the Installer Menu will cause a 2 second reversal of travel. See Installer menu item 12 on page 23.

Alignment:
Most photo eyes require careful optical alignment in order to aim the emitter beam to the center of the receiver or reflector. In order to avoid false triggering, it is important to carefully align the system, especially with retro-reflective photo eyes. The best way to assure true centering of the beam is with some trial testing where the emitter is shifted to move the beam left and right and up and down until the range of the invisible cone of the infrared beam is known. Photo eyes usually provide alignment aid LED's for this setup, but they can be hard to see. HySecurity has provided a unique feature that causes our buzzer to chirp when the photo eye enters and exits alignment. See User menu 9. Set the Installer menu item [PE_0] to [PE_1] and the buzzer will provide an audible indication both when the beam is broken and remade.

Notes about retro-reflective systems:
Correct installation and alignment of a retro-reflective photo eye and its reflector is important for a trouble free installation. Any system operating at a range greater than 16 feet is more prone to false triggering due to dirty optics, condensation or poor weather. If care is taken in the initial mounting and alignment of the 3-inch reflector, the chance of problems is greatly reduced.

Taking steps to protect the photo eye and the reflector from being exposed to fog and being absolutely certain the photo eye is perfectly aligned will greatly reduce any false triggering of the system. The ideal mounting of a retro-reflective photo eye is inside and enclosure of some sort.

The ideal mounting for the reflector is suspended inside a twelve-inch long piece of 3-inch PVC conduit. Cut the opening of the PVC conduit at a 45-degree angle to act as a drip shield. Hold the reflector against the backside of the PVC conduit by attaching a 3-inch male connector. Do not cement the connector, so that the reflector can be reached for future cleaning. To create a mounting base, attach a 3-inch aluminum flange (electric meter hub) to the connector. This whole package can be mounted to any flat surface.

Locate the reflector in the center of the invisible beam of infrared light to achieve the most sensitive alignment. The beam center is determined by the following test: while holding the reflector in your hand, slowly raise it until the beam is no longer returned, and the photo eye trips. Mark this maximum height. Now lower your hand and determine the lower limit of the infrared beam by watching for the trip point. Mark this position as well. Repeat the same procedure for left and right at the center elevation of the beam, as determined by the previous test. Once the four limits have been determined, either mount the reflector in the center of the area outlined or realign the eye for the position of the reflector. If the photo eye is realigned, be sure to perform the centering test again to verify that the reflector is truly in the center.

A last tip – if you coat the reflector with common dishwashing detergent, or some other anti-fogging compound, it will reduce fogging from atmospheric moisture.

Detector Loop Installation Guide

Detector Basics
The vehicle detector passes a small current flow through the “loop” which then becomes an inductive coil. When a vehicle passes over a loop the detector senses the resultant drop in the inductance, and actuates the detector output.

Loop Configurations
Configurations differ depending on the application. In parking applications with the StrongArm operator, a loop may be as small as 3’ x 6’. In other applications, specifically if high bed trucks must be sensed, the smallest loop should not be less than six feet square.

Rules to Follow for Security Gate Applications

1. The loop closest to the arm shall be centered directly under the barrier arm.

2. The shortest side of the loop shall be between four (3) and eight (8) feet in length. The longest side of the loop shall be between six (6) and twenty (20) feet in length. For applications that need to span a wide area, use several smaller loops. Do not exceed a maximum of 200 square feet of loop area to only one detector.

3. In applications with multiple loops, keep each loop at least six feet apart. This avoids “cross talk”. It is possible to have loops closer together by selecting different frequencies. An advantage of using HySecurity model HY-5A detectors is that problematic “cross talk” is not possible.

4. To avoid interference, keep loops at least two (2) inches above any reinforcing steel. Do not route loop wires with, or in close proximity to, any other conductors, including other loop leads, unless shielded lead-in cable is used. Never route high voltage circuits in PVC conduit near a loop.

5. Loop and lead-in wire should be one continuous piece. Avoid splices, if possible. If a splice is necessary for any reason, “pot” the splice in epoxy or use heat shrink to ensure that the quality of the splice covering is the same as the original wire jacket.

6. Use only number 14, 16, or 18 gauge stranded wire with a direct burial jacket. Cross linked polyethylene insulation types, such as, XLPE or XHHW, will last much longer and are less prone to damage during installation than conventional insulation types. Preformed loops can be used before road surfacing or under pavers.

7. Twist loose tails of lead-in wires tightly, approximately ten times per foot.

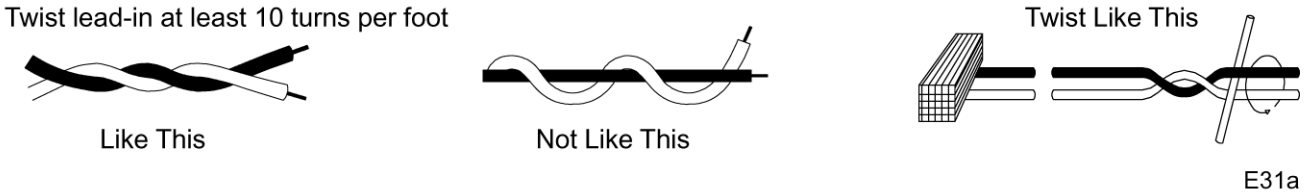

Detector Loop Installation Guide, continued

8. Follow this guide for the correct number of wire turns according to the perimeter size of the loop:

   10 to 13 lf. = 5 turns 14 to 26 lf. = 4 turns 27 to 45 lf. = 3 turns 46 to 100 lf. = 2 turns

9. This guide is written from a design perspective, but installation workmanship practices are equally important to insure proper operation and long loop life. The best way to insure a quality installation is to employ a professional installer experienced with detector loops. A few important practices are: **A.** The slot in the surface should be cut ¼" wide x 1 ½" deep. **B.** The corners of the cut must be at an angle or core drilled to relieve stress on the wires. **C.** After the wire is installed, the slot must be completely backfilled with a non-hardening sealer. Note that if the loop wires are able to move in the slot after the sealer has set, the detector may give false calls.

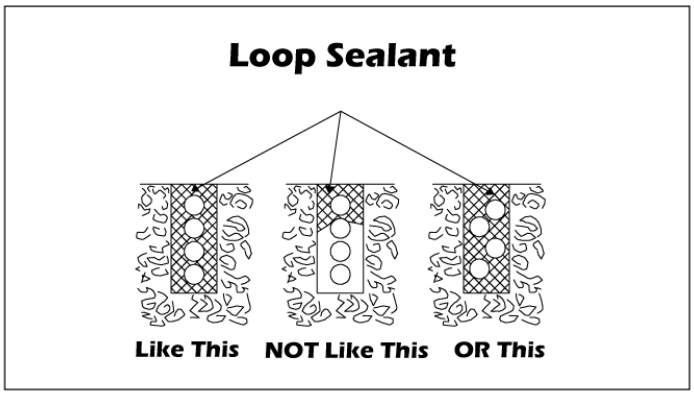

Detector Logic
HySecurity Gate Operators recommends that vehicle detectors be used for free open and obstruction sensing logic only. The exception is in parking applications with our StrongArm (HTG 320) barrier arm operator where a reset detector may be also used to close the gate. In applications employing our swing, vertical lift, or sliding gate operators, closing logic cannot be used.

Loop Diagnostics
The following tests cannot guarantee a functioning loop, but failure of either test means that the loop is definitely suspect, even though it may still be functioning at the time.

Test #1:
Resistance of the loop and lead-in wire should not exceed 4.0 Ohms.

Test #2:
The resistance to earth, as measured with a 500V "Megger", should be 100 Megohms or more. Loops may function at 10 Megohms or less but will not be reliable (e.g. when the ground is wet from rainfall). Low resistance indicates broken or moisture saturated insulation. This is common if inappropriate wire insulation has been used.

See also Detector and Loop Fault Diagnostics on page 41 for additional tests that may be performed with HySecurity HY-5A detector modules.

HTG 320 ONLY

Bi-directional traffic system with controlled access entry (card reader, radio control, etc) and free access out. The gate is opened by either the card reader or the free exit loop and stays open until the vehicle clears the closing loop.

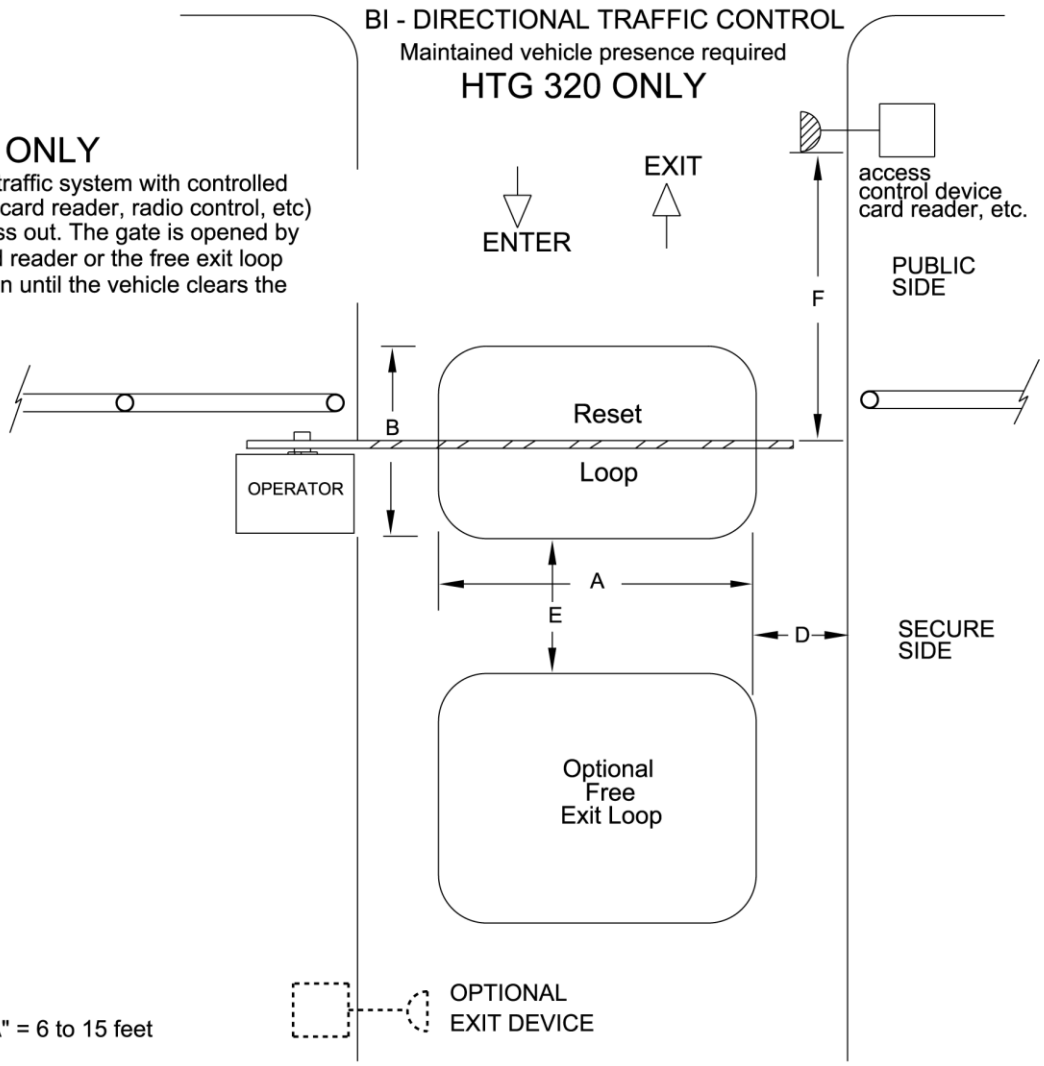

Dimension "A" = 6 to 15 feet

Dimension "B" = 6 to 8 feet. If tailgating is a concern, dimension "B" may be as small as 3 feet but sensitivity to high bed vehicles will be substantially impaired.

Dimension "C" = Does not apply in this design.

Dimension "D" = Maintain 4 feet between loop and edge of roadway. No vehicle can pass through such a small area and escape detection.

Dimension "E" = 4 feet maximum. Vehicles must be able to pass from one loop to the next without loss of detection.

Dimension "F" = 10 to 12 feet suggested.

seattle, washington	TITLE HTG320 BARRIER ARM LOOP LAYOUT	DRAWN DB	DATE 05/15/00	THIRD ANGLE PROJECTION		REV A
		CHECKED -	DATE -	ERN NUMBER -	DATE -	
		APPROVED -	DATE -	DRAWING NUMBER E95		SHT 1 OF 1

Vehicle Detector Installation Options

The Smart Touch Controller provides a feature rich interface to four different vehicle detector inputs. Standard box type 11 pin (24 Volt DC or 24 Volt AC) vehicle detectors may be connected in the traditional manner, see page 38. HySecurity also offers a custom mini detector module that plugs directly into the Smart Touch Control board. Not only is the field installation much faster, but there is also a large performance benefit. The HySecurity HY-5A detector is controlled by the Smart Touch microprocessor to achieve many benefits over common box type detectors*

a. Loop frequency is automatically set and monitored by the Smart Touch Controller
b. Cross talk between multiple loops is impossible
c. The best operating frequency for each loop is automatically chosen
d. Smart Touch can report the both loop frequency and call strength on its LCD display
e. Smart Touch will report loop malfunctions and store this data in its EEprom memory
f. Most detector or loop faults that could occur are reported and displayed on the LCD display

There are four vehicle detector inputs available both on the main terminal strip and as direct plug in modules. The vehicle detector inputs are for the following functions:
1. Free Exit Loop Detector – **"ELD"**
2. Outside Obstruction Loop Detector – **"OOLD"** (this is the outside reversing loop)
3. Inside Obstruction Loop Detector – **"IOLD"** (this is the inside reversing loop)
4. Reset Loop Detector – **"RLD"** (this is used to trigger a Barrier Arm gate closed)

*A combination of HY-5A detectors and standard box detectors is acceptable

It is not mandatory to use the inner or outer obstruction detector inputs for a barrier arm.
The obstruction detector inputs are primarily used for sliding and swing type security gates. The primary loops for most barrier arm systems are for the Reset Loop Detector and the Free Exit Loop Detector.

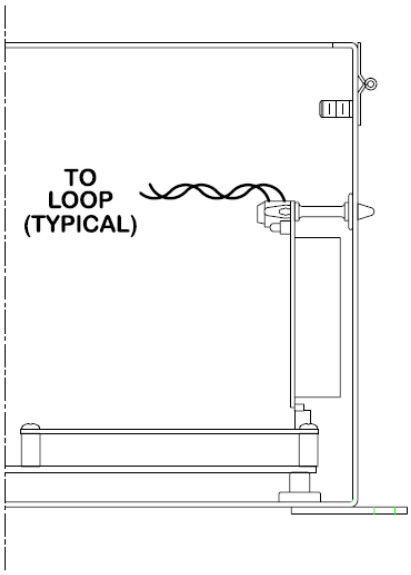

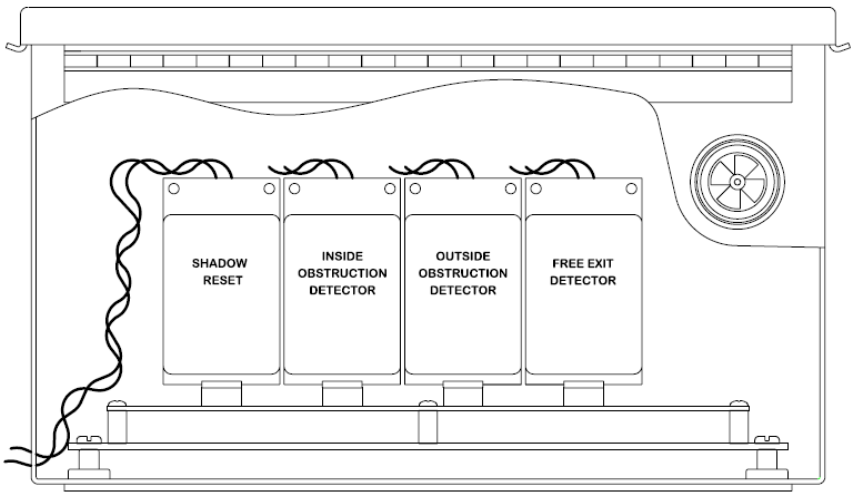

HySecurity HY-5A Vehicle Detector Installation

1. Insert the locking end of each of two 1” long white plastic standoffs into the mounting holes on the detector.

2. Plug the detector into the appropriate socket along the right side edge of the Smart Touch Controller board for the detector function that is desired. Be careful to align the six detector pins into the socket correctly, and then snap the standoffs into the holes on the right side of our control enclosure.

3. Route the loop wires through the wire clips provided and connect the loop leads to the two terminals directly on the detector. Tighten the terminal screws securely.

4. When the power is turned on, the detectors will immediately tune themselves.

5. Once enabled, if the detector module is unplugged, a communications alert [AL10] will be triggered, then if the fault continues, [Err3] “detector failed” is displayed. The operator will also run as if the affected detector is triggered. The [Err3] can only be cleared by pressing the Reset button, which electronically uninstalls the detector. See Detector & Loop Diagnostics on page 41.

6. The Smart Touch Controller automatically governs frequency selection of all Hy-5A detector modules. This simplifies installation and guarantees that there is no cross talk between multiple loops. The frequency can also be manually selected if needed, see the installer menu options.

7. Sensitivity is the only adjustment on the detector itself. Generally sensitivity does not need to be increased unless the loop is large loop or there are multiple loops connected to one detector. Do not exceed more than 200 sq/ft of loop area to one detector.

   The rotary switch for sensitivity has eight settings, which are as follows:
   0 = Low, 1 = Normal, 2 = Medium, 3 = High (0-3 with the boost feature*)
   4 = Low, 5 = Normal, 6 = Medium, 7 = High (4-7 no boost feature*)
   *Boost increases the sensitivity during a call and is very useful for maintaining continuous detection when the signal may become weak, such as semi-trucks.

8. Vehicle detector functions are configurable in the Installer Menu as shown below.

	Installer Menu Options	Default	Description
I16	[or 1] OOLD detector function	1	0 = pause closing only, 1 = enable reversing to open
I17	[ir 1] IOLD detector function	1	0 = pause closing only, 1 = enable reversing to open
I18	[Cr 1] RLD -Reset detector function	0	0 = Reopen if tripped while closing, 1 = Pause only
I19	[Cb 0] RLD -Reset detector function	0	0 = One way, 1 = Bi-directional - disables ELD if tripped first
I20	[CP 0] RLD -Reset detector function	0	0 = Std. Close, 1 = Count opens & closes after equal reset
I21	[Eb 0] ELD –Exit detector function	0	0 = Off, 1 = Enable ELD back off auto close feature

I18 [Cr__] Controls whether the reset loop stops only or reverses for a tailgating vehicle.
I19 [Cb__] Allows bi-directional use by disabling the free exit loop when a vehicle enters.
I20 [CP__] Adds an open input counting function that allows the arm to stay open until a 2nd car exits. This is useful to not trap the 2nd vehicle if the open input has some kind of anti-passback function.
I21 [Eb__] Allows the free exit loop to generate a close command when cleared.

The outside and inside Obstruction Loop Detectors “OOLD” or “IOLD” are factory configured to fully re-open the gate. Each detector can individually be set so that when the gate is closing there is only a pause if triggered. Set the menu items [ir__] and [or__] to 0 for pause only.

Standard 11 Pin Box Type Vehicle Detector Installation

1. If standard 11 pin vehicle detectors are to be used, snap up to three sockets onto the aluminum DIN mounting rail, with the key in the center hole facing to the left. Mount on the shelf near the top of the operator and wire as shown below.

2. Both 24 Volts AC or DC are available, so either detector voltage may be used. (24 VAC is not available if the operator is a battery type) 24 VAC is available at the spade terminals on the lower left corner of our power supply (marked ACC). 24 VDC is available from the Common Buss and the +24 V spade terminals next to the common Buss.

3. Connect 24 Volt power to the detector. Polarity does not matter if the detector is a 24 AC model. If a DC detector is used, pin #1 is (+) on a DC detector and pin #2 is (-).

4. Connect the output pin #6 to the common Buss on the power supply and the output pin #5 to one of the four detector inputs (depending upon the detector function required) on the Smart Touch Controller terminal strip.

5. If multiple detectors are used, join the wires from socket to socket rather than run each to the same location separately. The only wires that are separate is the output wire to the Smart Touch Controller and the loop input wires.

6. Always keep the loop wires well twisted at all places beyond the area of the loop. The lead in portion sealed in a saw cut does not need to be twisted so long as the wires are encapsulated in loop sealant and cannot move.

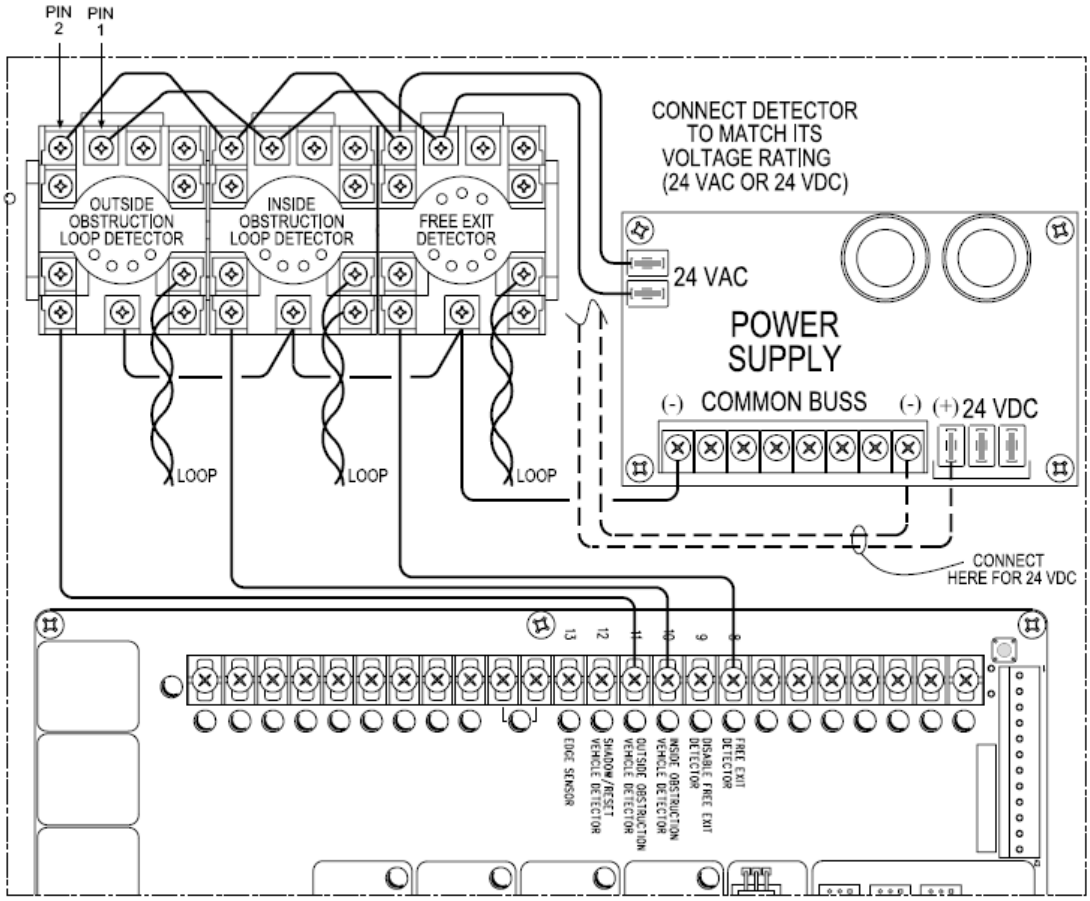

Detector & Loop Fault Diagnostics

If HySecurity HY-5A mini detector modules are used, the Smart Touch Controller has ability to store and report detector and loop fault information for performance diagnostics. If The Smart Touch Controller senses a loop or detector problem, the LCD display will flash the abbreviation for the affected detector (ELd – ioLd – ooLd – rLd) then it will flash the appropriate Alert Code [ALE_] to disclose the nature of the problem and the buzzer will chirp.

Loop abnormal freq change alert	ALE7	2 chirps/sec every 15 seconds
Loop shorted to ground alert	ALE8	2 chirps/sec every 15 seconds
Loop disconnected alert	ALE9	2 chirps/sec every 15 seconds
Loop detector active >5 minutes	AL12	2 chirps/sec every 15 seconds
Loop detector comm. alert	AL10	2 chirps/sec every 15 seconds
Loop detector function alert	AL11	2 chirps/sec every 15 seconds
Loop detector failed	Err3	3 chirps/sec once per minute

Even if the loop problem self heals, historical data about detector/loop performance and a log of Alerts, Faults and Errors can be retrieved from the Smart Touch Controller by downloading from the RS232 communications port. This requires optional HySecurity software and cables, and a PC computer or a PDA using the Palm OS, in order to read this data.

Frequency:
Knowing the exact frequency of a loop can be useful as a diagnostic tool and verifying that the loop frequency is stable is also very valuable information. To view the actual loop frequency of a specific vehicle detector, go to the setting for that detector, then change the selection to a flashing 1 and then press the Select button. The display will flash between [F_xx] which are the high digits, then the low digits of the loop frequency counter. For example: [F_05] + [3413] would represent a frequency of 53,413 Hertz. The highest digit will probably be only a single digit because loop frequency is usually a five-digit number, between 20,000 to 80,000 Hertz.

Changing the Loop Frequency:
HY-5A detectors can never crosstalk, but if for any reason, you want to manually change the loop frequency, change the menu selection to a flashing 4 and then press the Select button. Each detector has a choice of four frequencies. To exit, press the Menu button and the controller will perform a reset and tune to the new frequency setting.

Call Strength Level:
Knowing the strength level of a detector call is valuable because it provides information about how well the loop is actually “seeing” a specific vehicle. For example, it may be useful to check to see if the loop is easily detecting the middle of a high bed semi-truck. The strength of a detector call can be displayed in real time, on a scale of 1-7. As indicated in the table below, when a detector’s menu setting is set to 2, and the Select button is pressed, the LCD display will read [LE_x]. **If the call strength is level 4 or less, consider increasing the sensitivity level**, by adjusting the rotary switch on the HY-5A detector.

Installer Menu Options		Default	Description
I24	[ELd0] Test factory ELD	0	0=Run, 1=show freq, 2=show call level 0-7, 3= set Freq 1-4
I25	[iLd0] Test factory IOLD	0	0=Run, 1=show freq, 2=show call level 0-7, 3= set Freq 1-4
I26	[oLd0] Test factory OOLD	0	0=Run, 1=show freq, 2=show call level 0-7, 3= set Freq 1-4
I27	[rLd0] Test factory RLD	0	0=Run, 1=show freq, 2=show call level 0-7, 3= set Freq 1-4

Acronyms: Free Exit Loop = **ELd**, Outside Obstruction Loop = **ooLd**, Inside Obstruction Loop = **IoLd**
Reset Loop Detector = **rLd** (this is for barrier arm gates only)

24 Hr, 7 Day Timer Option

This is an option you can order from HySecurity. The timer generates an open command which will hold the gate open until it is released. Instructions on how to use and program it accompany the timer.

To connect the optional timer to the Smart Touch Controller, use the following schematic:

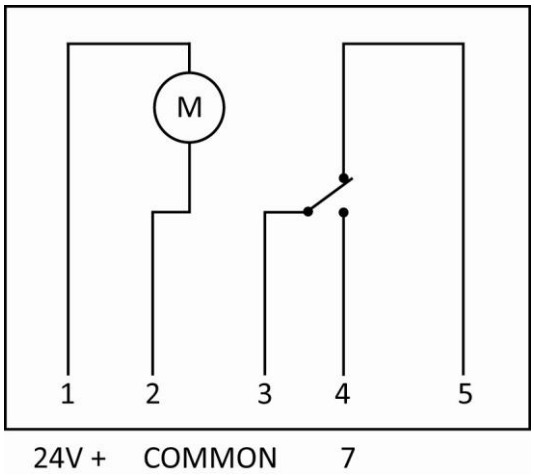

Connect the Timer Power Pin 1 to 24V (+)

Connect the Timer Power Pin 2 to COM

Connect the Timer Com Pin 3 to COM

Connect Timer NO Pin 4 to #7, Time Clock Open

Connecting a Radio Receiver for Remote Open

Mount a commercial style 24-Volt radio receiver (external antenna type) on the inside of the operator, below the electrical box. Knock out the smallest hole in the lower right corner of the electrical box and route the wires to the area marked Radio Options. Only three wire connections are needed because the 24-Volt supply and the radio output share a wire. Being certain to observe polarity, crimp the black radio power wire together with one of the radio output wires into a .25” spade connector and connect to the COM terminal. Connect the red wire to the +24V terminal and connect the other radio output contact wire to the spade marked OPEN. Note that this terminal is the same as the #4 input terminal labeled Edge Sensor on the main control board.

Mount an external antenna onto the top of a fixed post of the fence near the operator.

Connect the antenna into the socket on the radio receiver.

Set the DIP switches in the receiver to match the same code used in the transmitter.

If there is also to be an edge sensor transmitter to reverse the gate, be certain to use a two channel commercial receiver. Remember that each transmitter and receiver must have their codes set the same or they will not function.

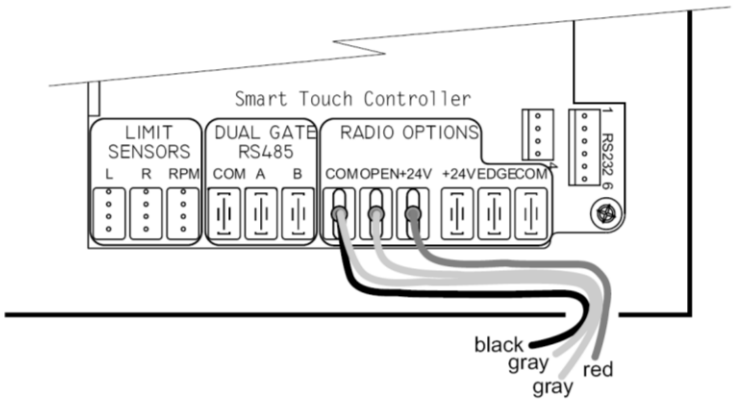

Radio output wires

Troubleshooting Guide, StrongArm (HTG 320) Gate Operators

Important Note:
If the manual bypass valve is open, the electric motor will run, but nothing will move. See the drawing on page 10 to locate the bypass valve. To close the valve, twist to allow the knob to re-engage.

Electrical Problems in General:
The Smart Touch Controller reports system malfunctions on its LCD display and the buzzer will emit a series of chirps at defined intervals. Review the matrix of Alerts, Faults and Errors listed on the next page. To disclose the status of all inputs on the terminal strip, the LED tact button must be pushed. This button is in the upper left corner near the Stop input.

Specific Types of Problems:
"I pushed the open and close buttons, but nothing runs."

1. Verify that the line voltage is present and matches the operator voltage ± 10%.
2. Verify that control voltage is present at the power supply Common and 24VDC terminals. It may be necessary to reset the circuit breaker (black button) on the transformer.
3. Verify a jumper wire joins Common to Stop, if an external stop button is not used.
4. Verify there are no Faults or Errors reported on the LCD display. See table on next page.
5. If the gate is in the open position, and an open input is still active, a close input cannot close the gate until the open input is cleared. Verify the input status by pressing the LED tact button.
6. If the motor contactor chatters, voltage drop due to undersized wires is the likely cause. Check Appendix 9 for the maximum allowable length of wiring runs vs. wire size.

"Motor is running, but nothing is moving."

1. Check the manual bypass valve. Close it if found open. See note at top of this page.
2. If the power is three-phase and the electric motor is running clockwise reverse any two of the three lines.
3. Check the fluid level in the reservoir. See maintenance instructions.
4. If the arm is closed and will not open, assist the arm by lifting it manually, if the arm moves with help, the open brake valve may be set too tight or pressure relief valve set too low. Alternately, there may not be sufficient counterweight. See page 11 for adjustments.
5. If the arm is open and will not close, check the close brake valve setting. See page 11.

"The arm tries to close when commanded to open."

1. Verify that the electrical coil to the hydraulic directional valve is connected.
2. Review information below pertaining to the directional valve.

"The arm bounces at the end of travel."

1. The brake valves and/or limit switches need adjustment. See page 13 for this procedure.

DIRECTIONAL VALVE: Our operators employ a two position, single solenoid directional valve. When 24-volt DC power is applied, the flow is directed to open the gate. In its normal spring loaded relaxed position the flow is directed to close the gate. If a malfunction should occur, it would most likely cause the gate to only move in the close direction. The directional valve is totally maintenance free.

To troubleshoot, first verify that 24 volts is being applied to the valve coil when an open command is given. Next, verify that the valve coil is functioning by removing its retaining nut and holding the coil slightly loose to verify that it is magnetized when the controls are activated to open the gate. If the problem persists, exchange the valve and change the hydraulic oil so that any debris in the oil would be removed.

Troubleshooting

The Smart Touch Controller system includes many self diagnostic capabilities. The LCD will display specific messages and the Audio Alert buzzer will sound distinctive chirps. Any Alerts, Faults or Errors are also logged into a memory and stamped with a time and date. For diagnostic purposes, these messages can be retrieved with optional WinLogger™ software available from HySecurity Gate.

The following chart is a listing of codes that would appear on the LCD display if problems are detected by the Smart Touch Controller.

Error, Fault, or Alert Status	LCD Display	Buzzer Chirp Sequence
Cannot respond due to tripped sensor or in Entrapment mode	Entr	2 chirps/sec every 2 seconds while control input is active
Safety Mode Alert	SAFE	2 chirps once when in Safety Mode
Low 24V Control Voltage Alert	Lo24 (ac or dc)	N/A (display flashes 1 sec every 5 seconds)
Critical Low 24V supply power	BadP (ac or dc)	N/A Display steady – controls disabled
Dead 24V Battery Alert –DC only	bat - dEAd	3 chirps upon any operating command
Gate forced open Alert	ALE1	2 pulses/sec for 30 seconds
Gate drift closed Alert	ALE2	2 pulses/sec for 10 seconds
Motor thermal overload Alert	ALE4	2 chirps/sec every 15 seconds
Limit not released in 10 seconds	ALE6	2 chirps/sec every 15 seconds
Loop abnormal freq change alert	ALE7	2 chirps/sec every 15 seconds
Loop shorted to ground alert	ALE8	2 chirps/sec every 15 seconds
Loop disconnected alert	ALE9	2 chirps/sec every 15 seconds
Loop detector comm. alert	AL10	2 chirps/sec every 15 seconds
Loop detector function alert	AL11	2 chirps/sec every 15 seconds
Loop detector active >5 minutes	AL12	2 chirps/sec every 15 seconds
General I2C comm. buss failure	AL16	2 chirps/sec every 15 seconds
Bad 3V coin battery	AL17	2 chirps/sec every 15 seconds
Lock Interlock (Input #22) Blocks Open	AL17	2 chirps/sec every 15 seconds
Maximum run Fault	FAL1	1 chirp once every 15 seconds
Photo eye Fault (supervised)	FAL2	2 chirps/sec once per minute
Critical AC sag – bad supply wire	FAL3	2 chirps/sec once per minute
Directional motion Error	Err1	3 chirps/sec once per minute
Disconnected IES Error	Err2	3 chirps/sec once per minute
Loop detector failed	Err3	3 chirps/sec once per minute
Master/slave RS485 comm. Error	Err4	3 chirps/sec once per minute
EEPROM Data Error (factory)	Err7	3 chirps/sec once per minute
EEPROM Data Error (installer)	Err8	3 chirps/sec once per minute
EEPROM Data Error (user menu)	Err9	3 chirps/sec once per minute
Program Data Error	FAiL	3 chirps/sec once per minute

The green LED (near terminal #24 on Classic Controllers or near the "coin" battery on New Generation Controllers) is the heartbeat of the processor. This LED should always blink brightly to indicate normal operation.

GATE SPEED: The speed in which a hydraulic operator moves a gate is determined by the size of the pump and the size of the actuator components. Just like a gear box, this speed is not adjustable. Attempting to slow a gate by changing any valve setting will cause a great deal of inefficiency and heat. If the speed of a gate must be changed, contact your HySecurity distributor. Extremely cold weather is unlikely to seriously affect the speed of the gate, because HySecurity employs a special grade of hydraulic oil that we call *UNIFLOW* oil, which maintains a very linear viscosity over a broad range of temperatures. Because of this high quality oil and other design considerations, we rate our operators for service in ambient temperatures of –40F degrees to 130F degrees. If the speed of your operator has been affected by cold weather, verify that the gate hardware s not impaired by ice and verify that the reservoir it is filled with *UNIFLOW* oil. In severe conditions, consider adding a heater.

General Maintenance

Hydraulic System

Fluid Level: Under normal conditions, hydraulic systems do not consume oil. Before adding any oil, check the system thoroughly for leaks. Remove the bright metal plug in the tank, fill to plug level, then replace plug. We recommend our *Uniflow* hydraulic oil; part number **H004 1.0**, which is sold in one-gallon containers by our distributors. ***Never use brake fluid. It will severely damage the entire hydraulic system. Use of any oil other than Uniflow oil may void the operator warranty.***

Look for leaks: Occasionally there may be slight seeping at the fittings after some usage. Tightening of the fittings will usually correct the problem. If the leaking persists, replace "O" rings, fittings or hoses, if required. No further leaks should occur.

Oil Change: A hydraulic system does not foul its oil, unlike a gas engine, so oil changes do not need to be frequent. Oil breakdown caused by heat is the main concern. If the unit is subjected to high use, especially in a warm climate, change the oil more frequently. In general, we recommend draining the reservoir and replacing the oil at five-year intervals.

To change the hydraulic oil, remove the reservoir from the pump unit and completely, empty it and wipe the reservoir clean and clean the derby screen before re-assembling. Refill with new *Uniflow* hydraulic oil. Slowly pour the oil into the tank until the oil is within one inch of the filler port. Replace the plug and wipe up any spilled oil. If any oil is allowed to remain, it will dry to a very sticky and messy consistency.

Mechanical Maintenance

Before servicing, turn off power disconnect switch

Depending upon duty cycles, use a grease gun to apply a lithium-based grease into the crank arm zerk fitting on six month to one year intervals. The main shaft bearings should be greased annually.

Electrical Controls

Before servicing, turn off power disconnect switch

No routine maintenance is needed for the electrical system or controls. If the environment is very sandy or dusty, or has many insects be certain to seal all holes in the electrical enclosure. Blow the dust out of the electric panel with compressed air. A qualified technician may troubleshoot with the aid of the troubleshooting guide in this appendix. If it is necessary to call a distributor for assistance, be sure to have your model and serial number ready. Other helpful information would include the name of the job, approximate date of installation, and the service record of the operator, especially any work that has been done recently.

How to Adjust the Pressure Relief Valve: To check your relief valve setting, first loosen a limit switch cam so that the operator will not shut off in one direction. Run the operator to either open or closed (the gate will not move with the hose disconnected. The relief valve is found on the rear of the hydraulic power unit. It has an adjusting head and lock nut. To adjust, loosen the lock nut and screw the threaded bolt clockwise for increased pressure, counterclockwise to decrease pressure.

MODEL	FACTORY RELIEF SETTING
StrongArm (HTG 320-2)	700 PSI
StrongArm (HTG 320-3, -6, -8)	1000 PSI

Barrier Gate Operator Maintenance Schedule

Name of part	What to do		Check at these recommended monthly intervals				
			1	*3*	*6*	*12*	*60*
Anchor bolts	Check for tightness	*2			X		
Limit Switches	Check for adjustment	*3			X		
Fluid level	Check for loss of fluid	*4				X	
Hydraulic fluid	Drain and replace fluid	*5					X
Brake Valves	Check for adjustment	*6			X		
Clock Battery	Replace	*7					X
Crank Arm Zerk	Lubricate with Grease				X		
Motor Brushes (DC Only)	Replace	*8					x

Special Notes:

*1. Damage to the barrier arm is usually the result of vehicular contact with the arm. Contact with the arm can also cause the crankshaft bearings to become loose or cracked if the contact force is great enough. This is not a warranty Issue.

*2. Confirm that the anchor bolts are tight and that the chassis hadn't shifted, which can also happen with vehicle contact to the operator.

*3. Check to see that the limit cams are tight and that they contact the limit switches enough to trip them but not crushing the limit switches.

*4. The oil level should remain approximately one inch below the filler hole. See maintenance instructions for oil filling. Loss of fluid is not normal and indicates a leak that must be located and repaired. The cap for the filler hole is a breather and needs only to be finger tight. Use "Uniflow" fluid, part # MX000970, if additional fluid is required.

*5. To drain the hydraulic oil, leave the arm in the closed position, and disconnect the hydraulic hose where it connects to the top of the hydraulic cylinder. Place the disconnected hose into a waste receptacle and start the gate in the open direction. All of the oil will drain within 15 seconds. Stop the pump immediately, when the flow ceases. Re-connect the loose hose. Refill with new UNIFLOW hydraulic oil available from the factory, or use a substitute, if performance in cold weather is not a question.

*6. Confirm that the brake valves are stopping the arm properly, and adjust if needed.

*7. Replace battery with DL 2025 / DL 2032 or CR 2025 / CR2032.

*8 DC Operators use DC motors with carbon brushes which wear in normal operation. Worn brushes can damage the DC motor. Under severe conditions HySecurity recommends that brushes be checked after **2 years** and the replacement interval be adjusted as necessary.

IMPORTANT SPECIAL NOTES REGARDING D.C. POWERED GATE OPERATORS

The on/off switch on the electric control panel of the drive unit does not disable all DC power to the operator, even if the AC power has been disabled at its source. The large rotary switch in the DC power supply enclosure must be actuated off to insure disconnect of all DC power to the drive unit.

The disconnect in the power supply must be off if the AC source power will be absent for more than one week. This avoids slowly discharging the batteries into the battery charger. Batteries will self-discharge and therefore the DC power supply must not be stored for a period longer than 6 months without recharging the batteries.

Batteries contain sulfuric acid. If batteries are dropped or damaged, be cautious not to get acid in the eyes, on skin, or on clothing and replace the batteries are immediately.

Be certain to observe polarity when connecting the batteries, or adding accessories. Reversed polarity may result in a non-functional operator or possibly damage a component. Red is (+) positive, and black is (-) negative.

Since the electrical current under load is very high, be certain that the minimum conductor size, specified in the installation instructions, is used for the connection between the battery pack and the operator. If the battery pack is more than 20 feet from the operator, use a larger wire size, according to the distance between the operator and the batteries.

If shorted, batteries will generate a very high current. Observe special care when connecting the cables to the batteries that the polarity is correct. The batteries are connected in a series circuit: join the positive (+) terminal from one battery to the negative (-) terminal of the next battery.

Since this operator is intended to run on batteries, control of the load is important. Easier moving gates will drain less energy from the battery, preserving capacity for more cycles during a power failure.

HySecurity uses a permanently sealed type battery, which needs no maintenance over its life span. A low voltage-sensing circuit protects the batteries from damage which could be caused by over-discharge. The charger automatically regulates its output to allow high output when the battery is partially discharged. The output will automatically be reduced to zero as the batteries become fully charged.

Batteries have a finite life. As the batteries age they will lose some of their capacity to store energy. If the total amount of back up capacity is critical, plan to replace the batteries after 5 years of use. Properly dispose of or recycle used batteries.

Batteries are rated to perform to capacity at a temperature of 77 degrees Fahrenheit. Below 77 degrees, the "amp hour" capacity is temporarily reduced. For example, at freezing, the capacity is 75%, at 10 degrees Fahrenheit, the capacity is 50%. HySecurity insulates the battery pack to guard against this loss. Do not remove any insulation or the performance of the system may be adversely affected.

Batteries can be damaged by excessive heat, which may shorten their life span. Therefore, do not paint the battery enclosure a dark color that could cause it to absorb a lot of heat from sunlight.

DC Motors contain carbon brushes which wear over time and must be replaced. Failure to replace the brushes will result in damage to the DC motor. Brushes should be replaced every 5 years, or sooner in high use and/or severe duty installations.

Wiring and Control Configuration for DC Operators

If this installation is a 24-Volt DC battery type gate operator, there are a few additional steps that must be completed before the system can be functional. Review the installation instructions on page 10 and the connection diagram on page 50. **Be certain the DC power disconnect switch is turned off before making any connections.**

1. Connect the heavy gage wires between the battery enclosure and the gate operator as follows: **Be certain to observe polarity carefully!**
    a. From the battery enclosure the (+) lead connects to the lug on the large rotary power disconnect switch. The (-) lead connects to the lug on the circuit breaker. At the gate operator the (+) lead connects directly to the lug on the top of the DC electric motor. The (-) lead connects to the bottom lug on the contactor mounted alongside the DC motor. All lug connections must be tightened very securely since they pass high current to the gate operator.

2. Connect two separate 14-gage circuits between the battery enclosure and the gate operator. One circuit provides the 24 VDC to the gate operator controls and the second circuit is required so that the Smart Touch Controller knows that the battery charger is operating normally on AC power. **Be certain to observe polarity carefully!**
    a. Connect four wires to the terminal strip in the battery supply labeled: (+)24, (-)24, COM, #21. The 24 Volt (+) and (-) terminals connect to the red (+) and black (-) wires at the on/off power switch in the gate operator.
    b. The COM and #21 terminals connect to the Common Buss and to terminal #21 (Charger AC power loss) on the Smart Touch Controller.

3. The Smart Touch Controller User Menu (U4) provides four optional system configurations for 24-Volt DC battery type gate operators. Since this is an uninterruptible power supply system, the installer must decide, depending upon customer preference, what is to happen when the AC line power fails. The User Relays will operate to less than 18VDC. There are four functional choices provided in the User Menu, item [AP_].

    Setting 0 (Type A): The operator functions normally until the batteries drop to 20 Volts, then auto open and lock until the battery voltage recovers to 23.5 Volts. The gate can still be manually closed only by a Close Pushbutton or an Emergency Close input and will then re-open by any open command until the battery voltage drops to 17 Volts at which time the gate is absolutely locked open, unless moved manually.

    Setting 1 (Type B): The operator functions normally until the batteries drop to 20 Volts, then auto close and lock closed until battery voltage recovers to 23.5 Volts. The gate can only be opened by a special combination of a Stop Pushbutton input, then within 1 second, an Open Pushbutton input. The Fire Department open input can open the gate without the special PBS enabling pre-input. The gate can be re-closed only by Close Pushbutton and the Emergency Close inputs. When the battery voltage drops to 17 Volts, the gate completes its final cycle and stays in the full open or full closed position, depending upon which cycle was last.

    Setting 2 (Type C): The operator automatically opens five seconds after loss of AC power and locks open, until AC power is restored. The gate can still be manually closed only by a Close Pushbutton or an Emergency Close input and will then re-open by any open command until the battery voltage drops to 17 Volts at which time the gate is absolutely locked open.

    Setting 3 (Type D): Same as type C, except the operator initially does nothing after loss of AC power, but then locks open after the next open command of any type.

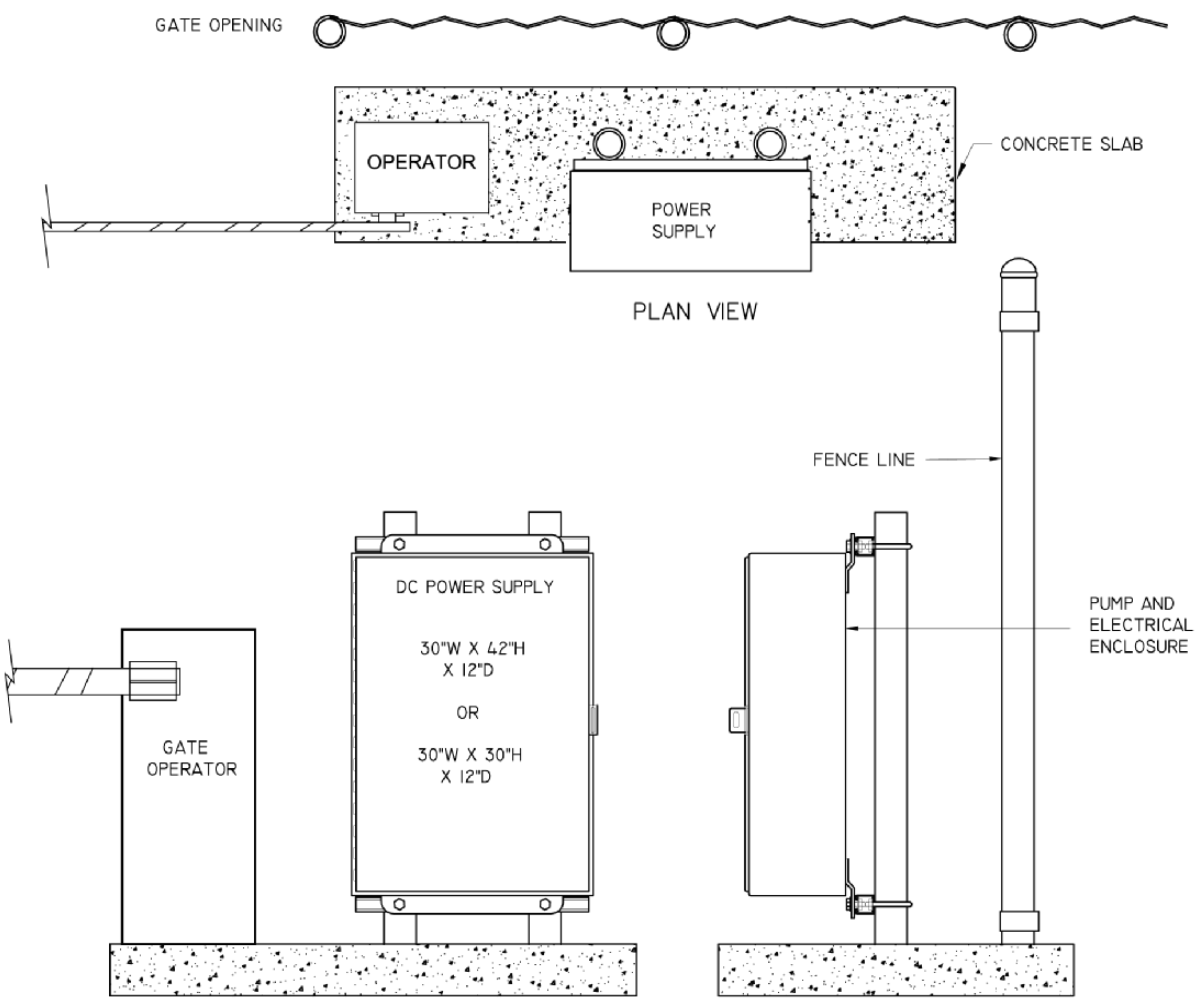

NOTES:

CONCRETE FOOTINGS MUST BE A MINIMUM OF 16" DEEP OR TO THE FROST LINE. CHECK LOCAL CONDITIONS.

DRIVE UNIT AND POWER PACKAGE MUST BE CONNECTED BY A MINIMUM 2" ROUND CONDUIT FOR PASSAGE OF ELECTRICAL WIRES.

SUPPORT POSTS FOR ELECTRICAL ENCLOSURE ARE 4" MINIMUM. POSTS AND HARDWARE ARE BY OTHERS.

ONE SLAB TO SUPPORT OPERATOR AND ELECTRICAL ENCLOSURE WILL HELP ASSURE ALIGNMENT OF ALL COMPONENTS.

WHEN POSSIBLE, ELECTRICAL ENCLOSURE SHOULD BE LOCATED WITHIN 10 FEET OF OPERATOR. CONTACT FACTORY IF DISTANCE IS GREATER THAN 10 FEET.

D.C. POWER BATTERY PACK
2 BATTERY, 110AH; 30"H X 30"W X 12"D

Power supply wiring to drive unit:
6 conductors required
2 ea. 14 gauge minimum for AC power loss indication
2 ea. 14 gauge minimum for control panel
2 ea. Heavy gauge for motor
6 gauge minimum up to and including 1 hp models.
Add two 14 gauge minimum if drive unit heater is supplied.

DC Remote Power Package - HTG 320

S66 HTG

Battery Connection Diagram

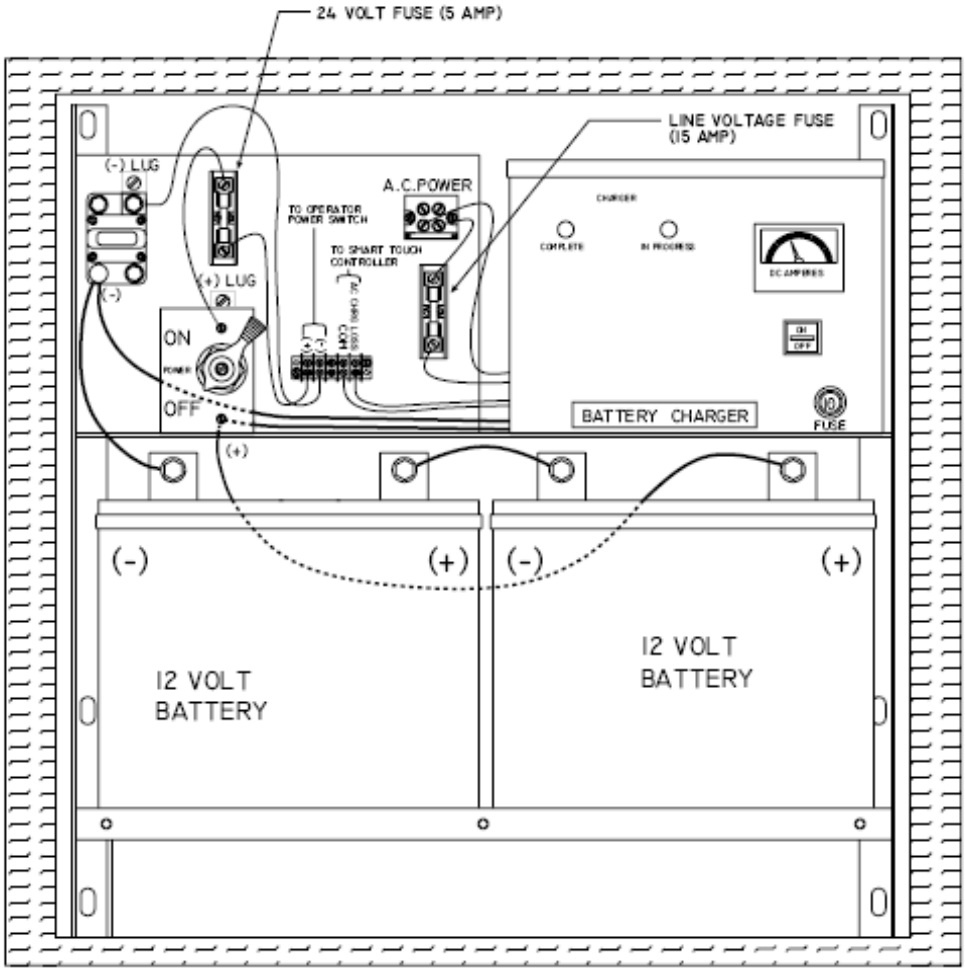

Connect six wires to the gate operator as shown.

Four 14 gauge wires to the Control Circuit
Connect from lug
Terminals to DC Motor
Two 6 gauge minimum for 1 hp
Or
Two 2 gauge minimum through 2 hp
Install batteries as shown observing polarity
Always observe polarity carefully.
Always connect red wires to (+) and black wires to (-) except for the wires connecting the batteries.

TITLE	DRAWN	DATE	REFERENCE RELEASE NOTICE	REV
24V 110A.H. BATTERY POWER SUPPLY FOR DC OPERATORS	CMK	28JUN01		A
	CHECKED	DATE	PART NUMBER N/A	
	APPROVED	DATE	DRAWING NUMBER: E125	SHT 1 OF 1

Wire Size Schedules

For 1/2-hp through 5-hp motors

Supplying a gate operator with the right electrical service is crucial to the way the performance of the operator the life of its electrical components. If the wire size used is too small, the voltage loss, especially during motor starting, will prevent the motor from attaining its rated horsepower. The percent of horsepower lost is far greater than the percentage of the voltage loss. A voltage loss could also cause the control components to chatter while the motor is starting, substantially reducing their life due to the resultant arcing. There is no way to restore the lost performance resulting from undersized wires, except to replace them; therefore it is much more economical to choose a sufficient wire size at the initial installation.

The tables on the following page are based on copper wire and allow for a 5% voltage drop. The ampere values shown are the service factor ampere rating (maximum full load at continuous duty) of the motor.

Always connect electrical power and ground the operator in accordance with the National Electrical Code, articles 430 and 250 plus other local codes that may apply.

The maximum distance shown is from the gate operator to the power source; assuming that source power is from a panel box with adequate capacity to support the addition of this motor load. The values are for one operator, with no other loads applied to the branch circuit. Avoid placing more than one gate operator to a circuit, but if you must be certain to reduce the maximum allowed distance by half.

Low Voltage Control Wiring:

The Smart Touch controller has very sensitive control inputs so the wire size of the control wiring is not a significant issue. The following is a chart of maximum distances for the controls:

Wire Size	Maximum Distance
18 ga	7.0 miles
20 ga	3.5 miles
22 ga	2.7 miles
24 ga	2.0 miles
26 ga	1.0 mile
28 ga	3700 feet

Wire Size for Voltage Drop Over Distance

Wire Sizes for Power Wiring, Single Phase

Distances are shown in the unshaded boxes

	115 V, SINGLE PHASE						208 V, SINGLE PHASE						230 V, SINGLE PHASE					
Amps	10.0	11.06	14.4	27.2	NA	NA	5.5	6.1	7.6	14.2	16.2	NA	5.0	5.8	7.2	13.6	14.8	27.0
Horse Power	1/2hp	3/4hp	1hp	2hp	3hp	5hp	1/2hp	3/4hp	1hp	2hp	3hp	5hp	1/2hp	3/4hp	1hp	2hp	3hp	5hp
Wire Gauge 12ga	90	75	60	30			290	260	205	110	100		350	300	245	130	120	65
10ga	140	120	100	50			460	415	330	175	155		560	480	385	205	190	105
8ga	220	190	155	80			725	650	525	280	245		880	760	610	325	300	165
6ga	350	300	245	130			1,150	1,040	835	445	390		1,400	1,120	975	515	475	260
4ga	555	480	385	205			1,825	1,645	1,320	710	620		2,220	1,915	1,550	815	750	410
2ga	890	765	620	330			2,920	2,630	2,110	1,130	1,000		3,550	3,060	2,465	1,305	1,200	660

Wire sizes for Power Wiring, Three Phase

Distances are shown in the unshaded boxes

	208 V, THREE PHASE						230 V, THREE PHASE						460 V, THREE PHASE					
Amps	2.7	3.1	4.2	6.5	6.7	16	2.4	3.0	3.8	6.2	6.4	15.4	1.2	1.5	1.9	3.1	3.2	7.7
Horse Power	1/2hp	3/4hp	1hp	2hp	3hp	5hp	1/2hp	3/4hp	1hp	2hp	3hp	5hp	1/2hp	3/4hp	1hp	2hp	3hp	5hp
Wire Gauge 12ga	590	510	375	245	235	100	730	585	460	280	270	115	2,915	2,350	1,850	1,130	1,100	455
10ga	930	810	600	390	375	160	1,160	930	730	450	435	180	4,640	3,710	2,930	1,800	1,740	725
8ga	1,475	1,285	950	615	595	250	1,835	1,470	1,160	710	690	285	7,340	5,870	4,650	2,840	2,750	1,150
6ga	2,350	2,045	1,510	975	945	400	2,925	2,340	1,845	1,130	1,095	455	11,700	9,350	7,400	4,550	4,400	1,800
4ga	3,720	3,240	2,390	1,545	1,500	630	4,625	3,700	2,920	1,790	1,735	720	18,500	14,800	11,700	7,200	7,000	2,900

Always connect in accordance with the National Electrical Code, article 430, and other local codes that may apply.

Parts Breakout

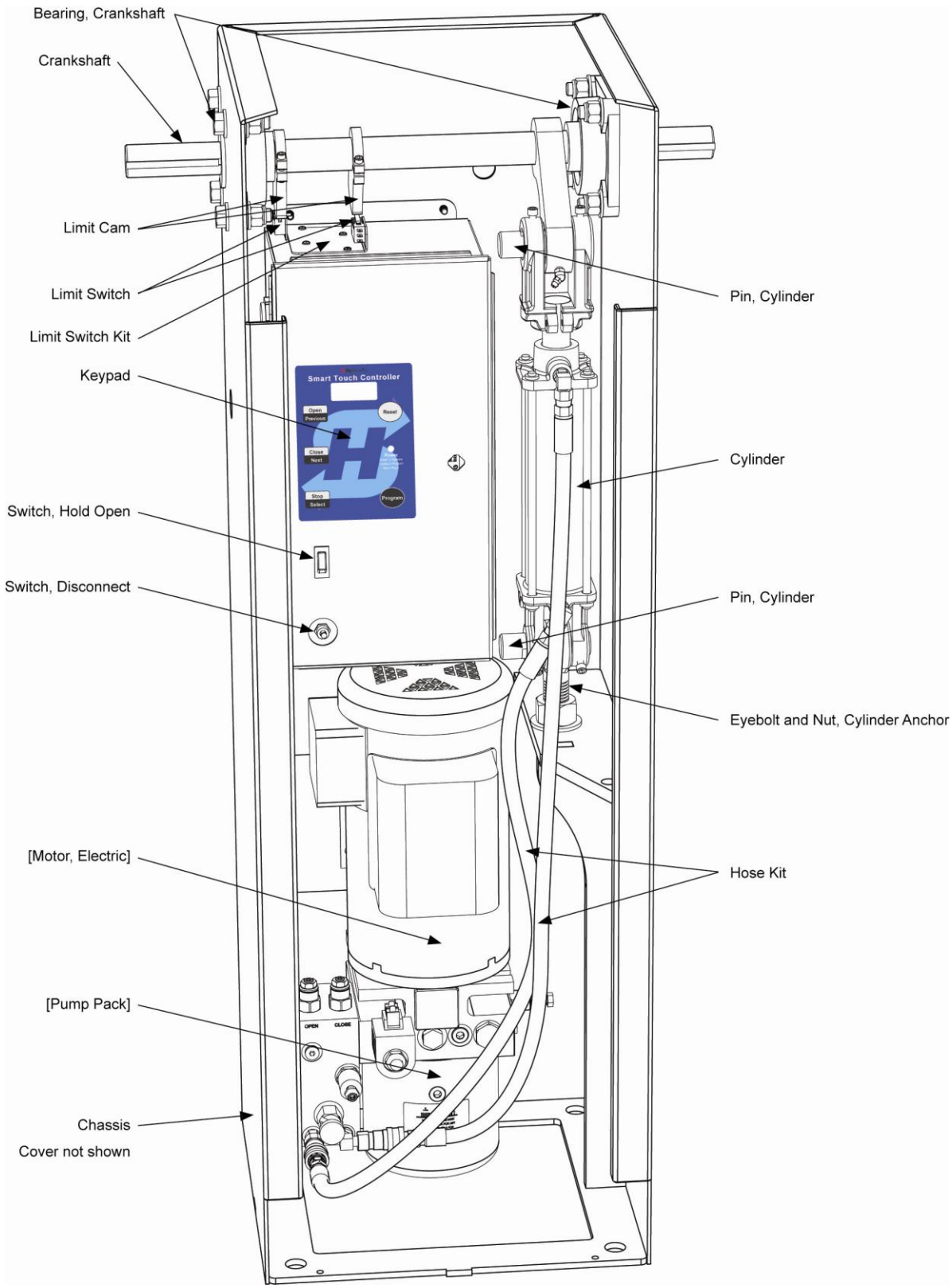

Parts Breakout

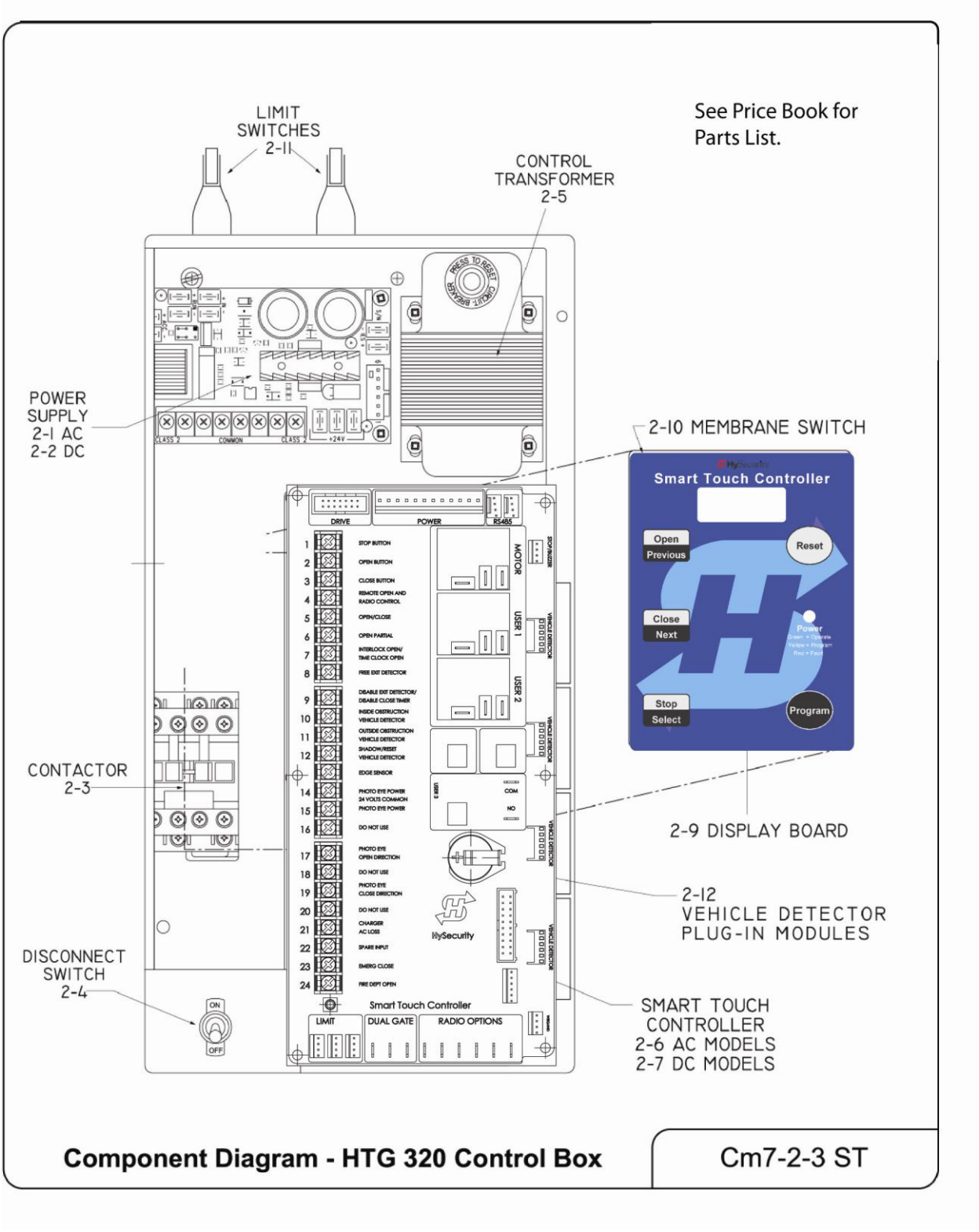

Parts Breakout – AC Pumps

1-2	MX000321	1EA	3-11	MX001153	1EA
1-3	MX000320	1EA	3-12	MX000171	1EA
1-5	MX000965	1EA	3-13	MX000199	1EA
1-6	MX001092	1EA	3-16	MX000146	1EA
3-1	MX000658	1EA	3-18	MX000086	1EA
3-2	MX000172	1EA	3-20	MX000101	1EA
3-3	MX000184	1EA	3-21	MX000100	1EA
3-5	MX000231	1EA	3-22	MX000102	1EA
3-6	MX000226	1EA	3-23	MX000103	1EA
3-7	MX000233	1EA	3-24	MX000236	1EA
3-8	MX000229	1EA	3-25	MX000139	1EA
3-9	MX000234	1EA	3-26	MX000659	1EA
3-10	MX000230	1EA			

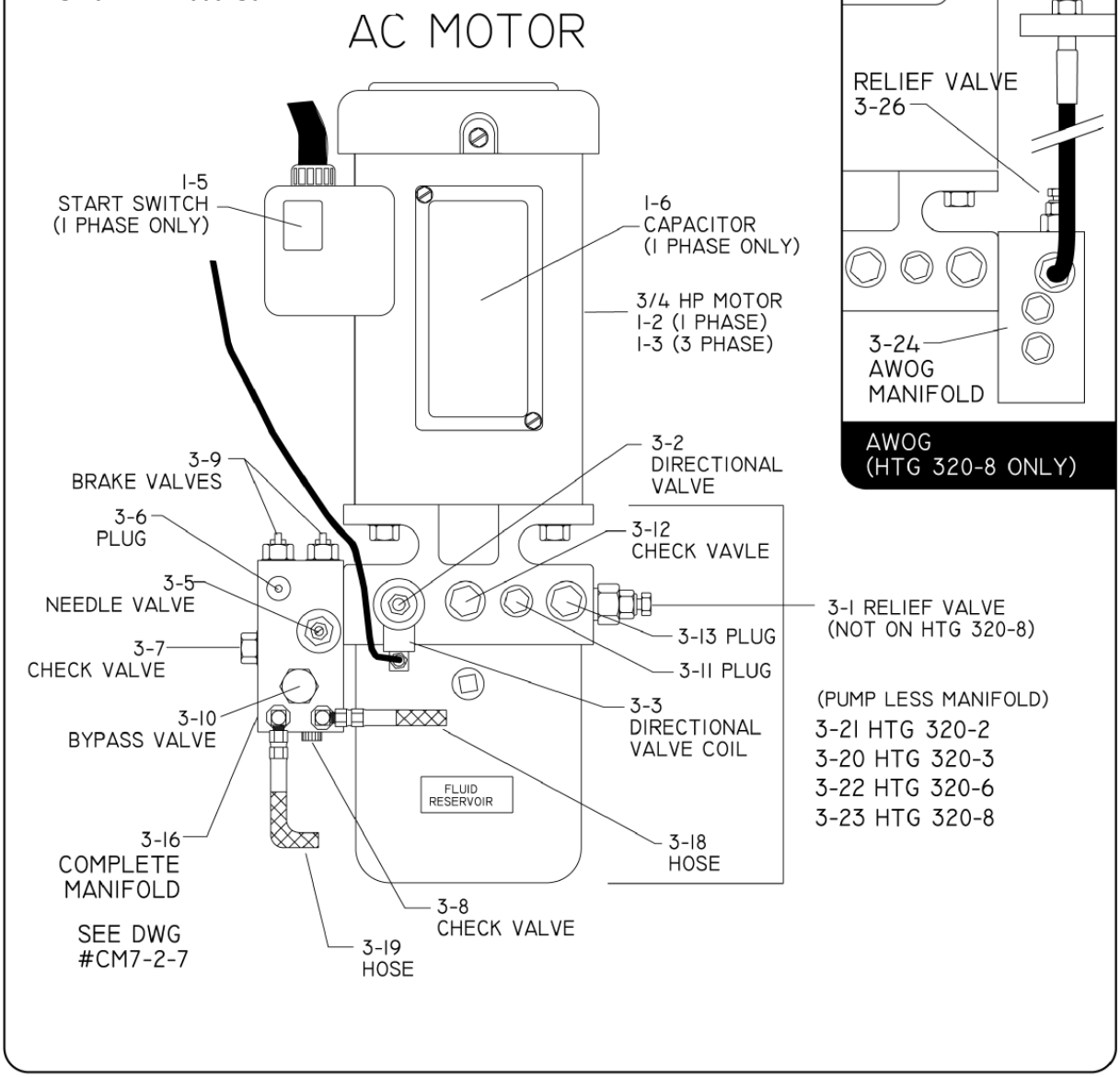

	TITLE	DRAWN	DATE	THIRD ANGLE PROJECTION	REV
SEATTLE, WASHINGTON	COMPONENTS, HTG 320 PUMP, AC TYPE	KERI	12/1/00		–
		CHECKED SHOP	DATE MM/YY/DD	PART NUMBER N/A	
		APPROVED ENGRNG	DATE MM/YY/DD	DRAWING NUMBER: CM7-2-8	SHT 1 OF 1

Parts Breakout – DC Pumps

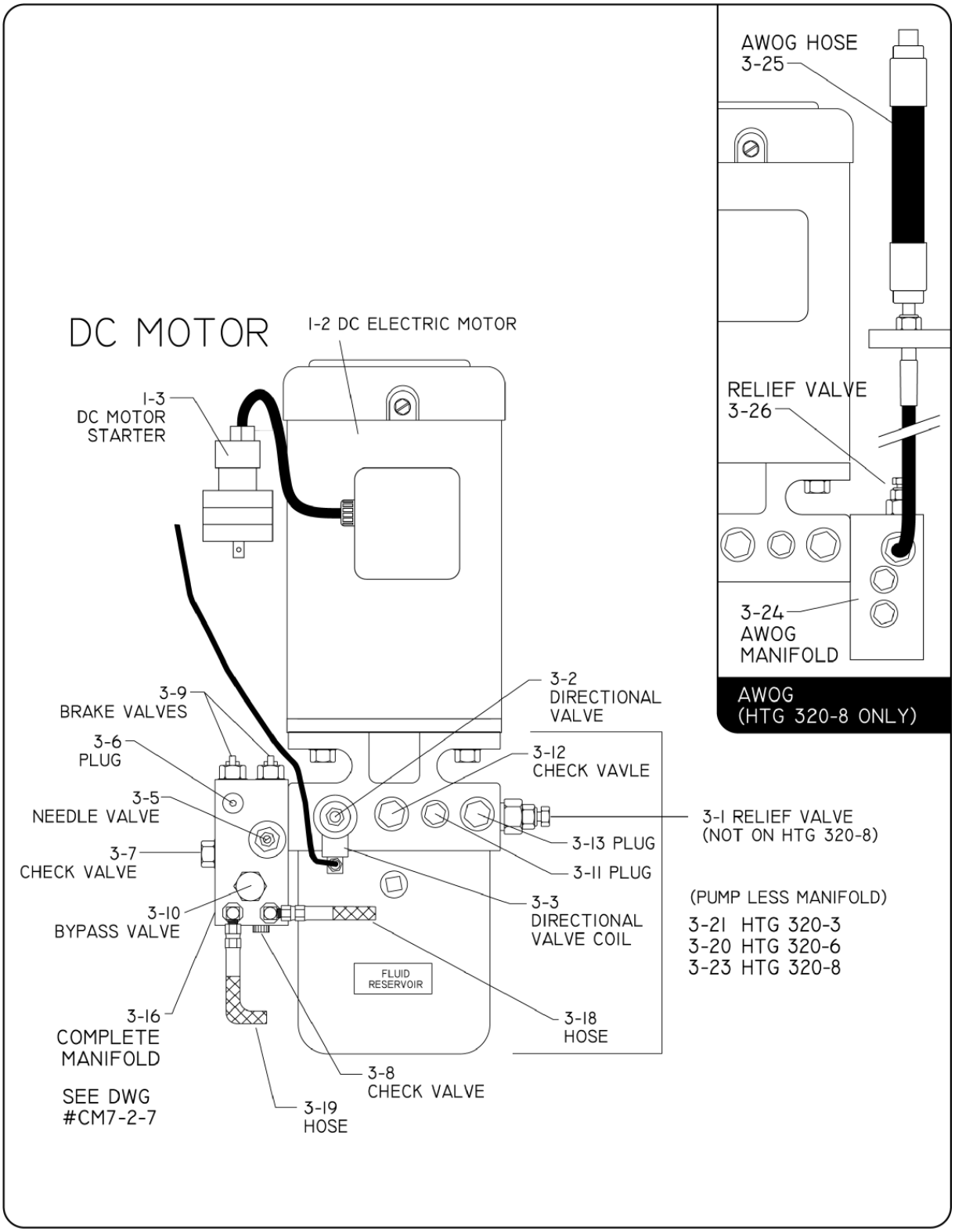

	TITLE	DRAWN	DATE	THIRD ANGLE PROJECTION	REV
	COMPONENTS, HTG 320 PUMP, DC TYPE		12/1/00		–
		CHECKED SHOP	DATE MM/YY/DD	PART NUMBER N/A	
SEATTLE, WASHINGTON		APPROVED ENGRNG	DATE MM/YY/DD	DRAWING NUMBER:	SHT 1 OF 1

Parts Breakout

3-1	MX000077	1EA
3-3	MX000228	2EA
3-18	MX000086	KIT
4-1	MX000312	2EA
4-2	MX000601	1EA
4-3	MX000601	1EA
4-4	MX000579	1EA
4-5	MX000306	2EA
4-6	MX001100	1EA

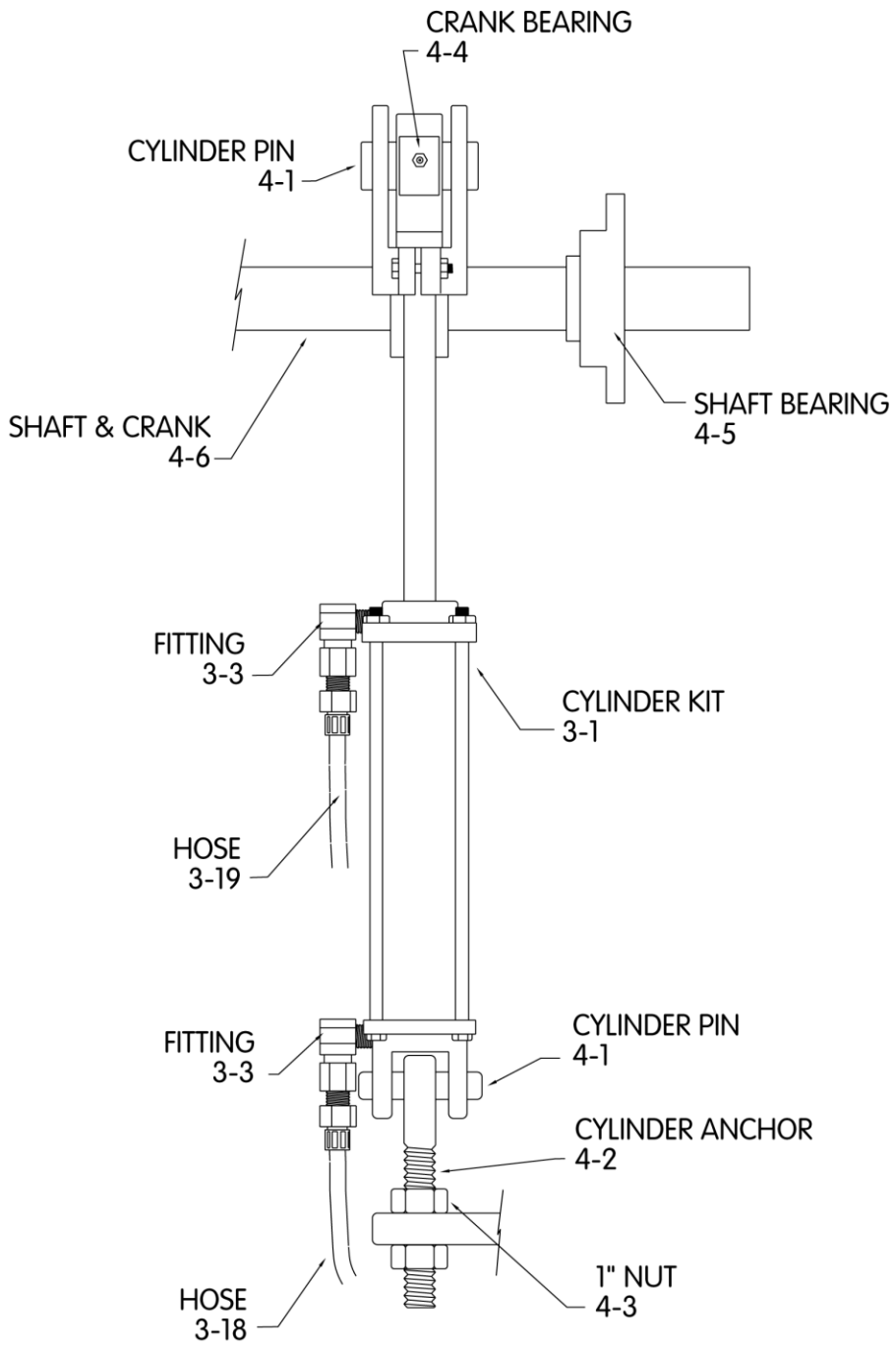

Component Diagram - Hydraulic Cylinder Cm7-1-4

Parts Breakout

	Item #	Qty.
3-5	MX000231	1 each
3-7	MX000233	1 each
3-8	MX000299	1 each
3-9	MX000234	1 each
3-10	MX000230	1 each
3-11	MX000226	1 each
3-12	MX000226	1 each
3-13	MX000190	1 each
3-14	MX000146	1 each

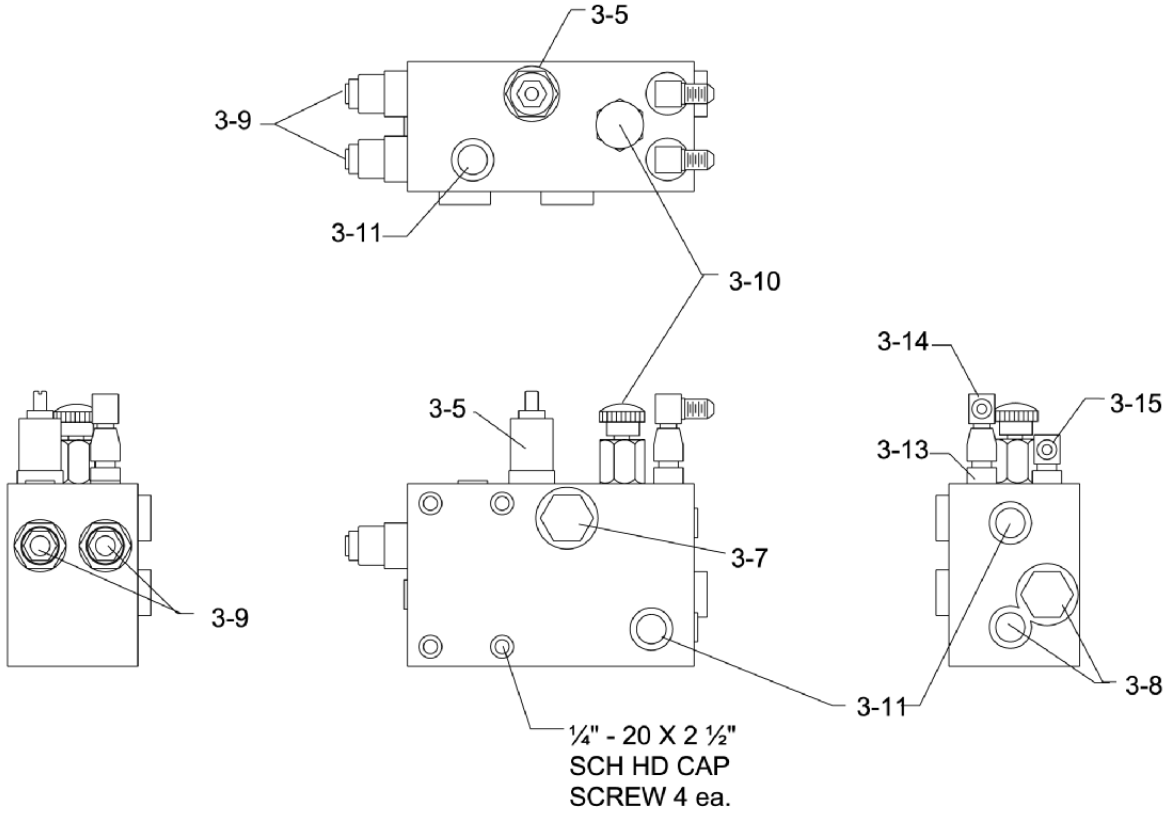

COMPLETE MANIFOLD IS 3-16

TITLE	DRAWN	DATE	THIRD ANGLE PROJECTION	REV
COMPONENTS, HTG 320 MANIFOLD	KERI	12/1/00		--
	CHECKED SHOP	DATE MM/YY/DD	PART NUMBER N/A	
seattle, washington	APPROVED ENGRNG	DATE MM/YY/DD	DRAWING NUMBER: CM7-2-7	SHT 1 OF 1

Parts Breakout – DC Power Supply

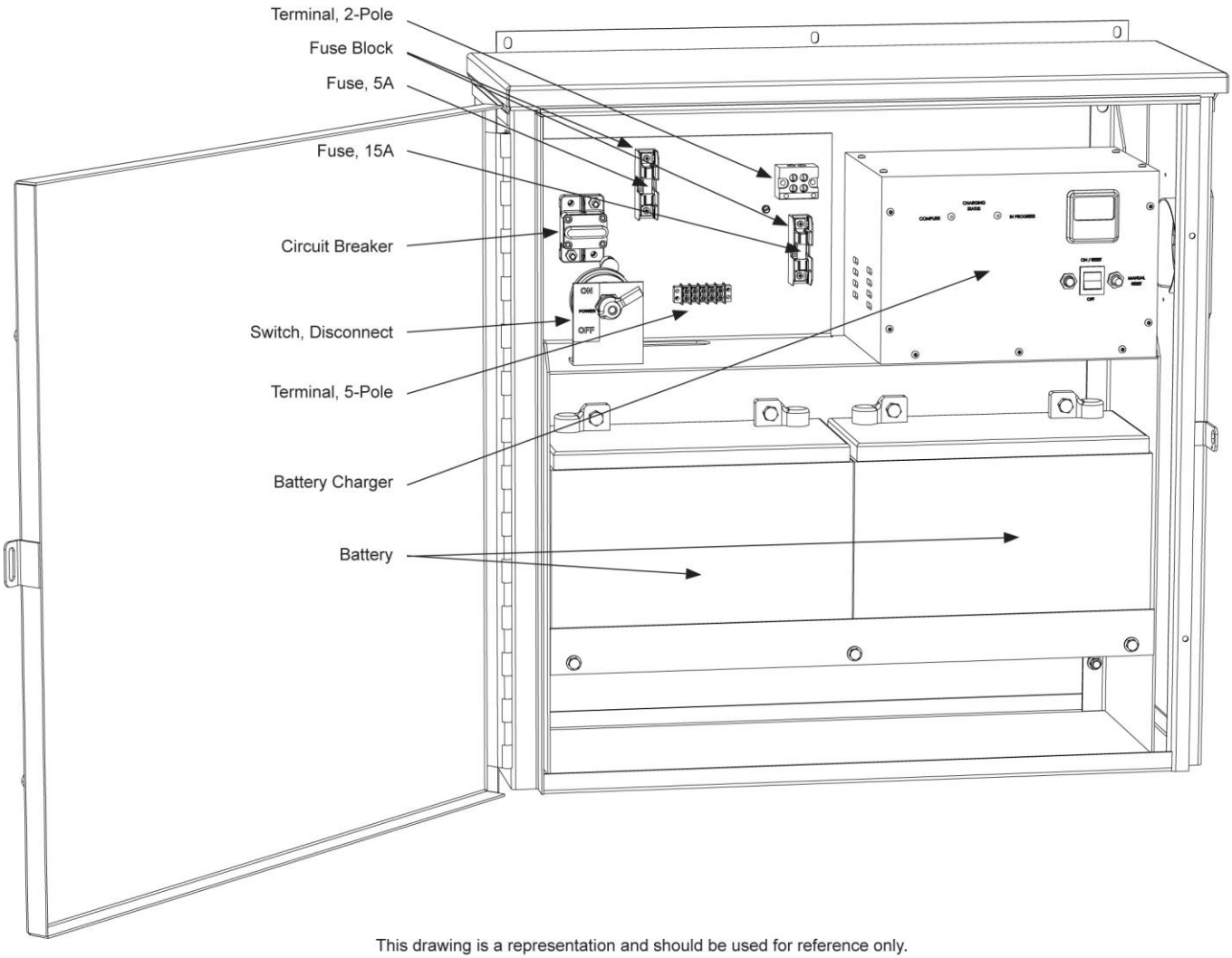

This drawing is a representation and should be used for reference only.

Part Name	*Part Number*	*StrongArm UPS Models (current)*
Battery Charger, 60Hz, 115VAC	MX001719	115VAC, 60Hz input
Battery Charger, 60Hz, 208VAC	MX001720	208VAC, 60Hz input
Battery Charger, 60Hz, 230VAC	MX001721	230VAC, 60Hz input
Battery, 12V, 110AH, AGM	MX000877	all
Circuit Breaker, 60A DC	MX000842	all
Fuse Block	MX000863	all
Fuse, 15 Amp	MX000865	all
Fuse, 5 Amp	MX000864	all
Switch, Disconnect, DC Power Supply	MX000844	all
Terminal, 2-Pole	MX000859	all
Terminal, 5-Pole	MX001270	all
Call for 50Hz battery chargers		

Smart Touch Controller Connections

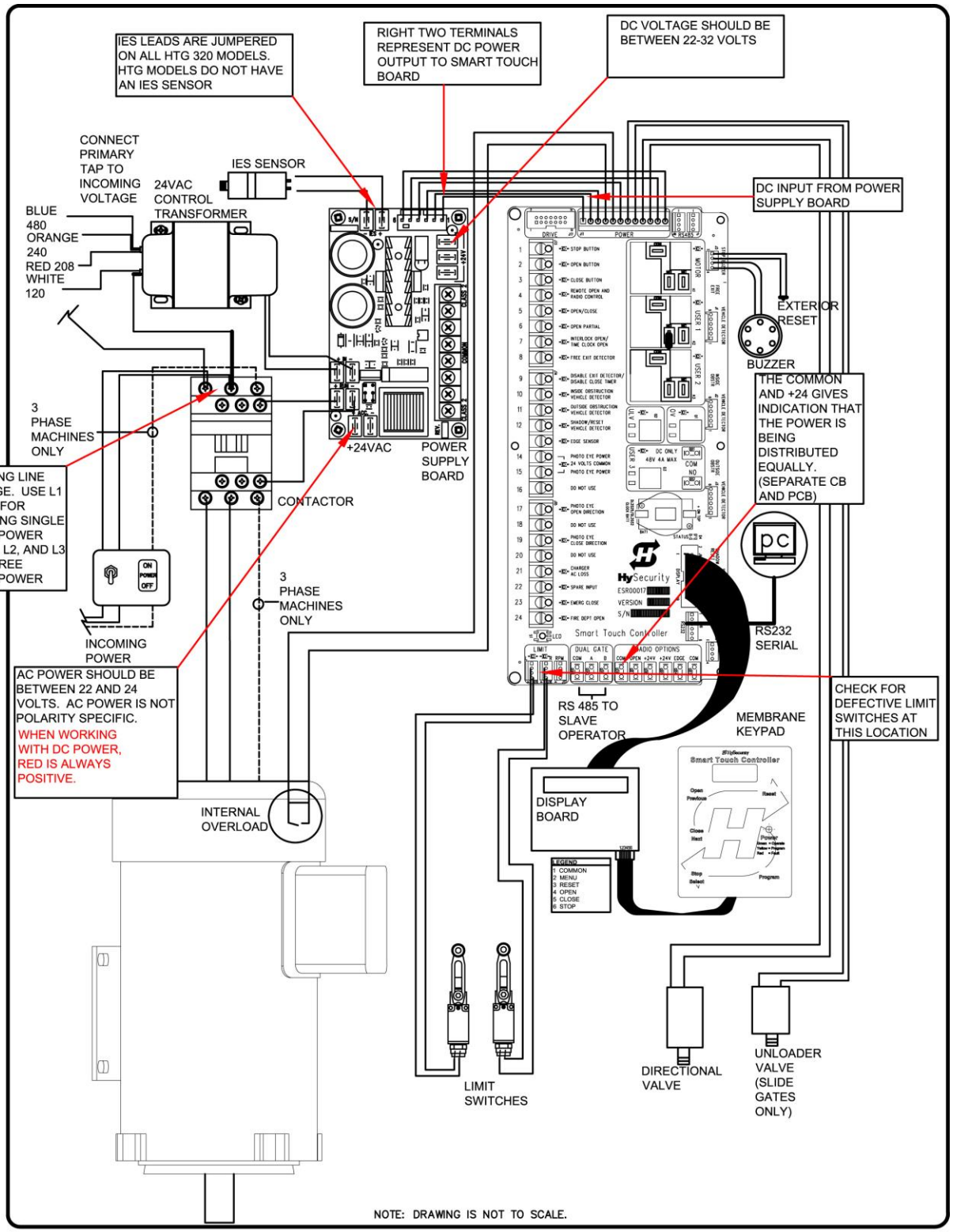

StrongArm Brake Valve Adjustment

1. Start with the arm in the ***down*** position and the limit switches set to trip approximately ten degrees before full close and ten degrees before full open:
   a. Loosen the ***relief valve*** by turning the adjuster screw ***counter-clockwise*** three turns (see attached picture document).
   b. Loosen the ***brake valves*** by turning each adjustment screw ***clockwise*** until it bottoms out then turn the same adjuster back ***counter-clockwise*** one full turn(see attached picture document).

2. Give the operator an "Open" command and slowly turn the relief valve adjuster screw ***clockwise*** until the arm begins to rise smoothly. (If the operator times out, you will need to reset and start over.) This is your relief setting; tighten the lock nut, there is no more adjustment to this valve.

3. The next valve to be adjusted is the ***close brake valve***; which is the first brake valve to the left of the relief valve. At this time the arm is now in the open position.
   a. To adjust the ***close brake valve*** you will first need to turn the adjuster ***counter clockwise*** to the top of its adjustment.
   b. Give the operator a "Close" command and slowly begin turning the ***close brake valve*** adjuster screw ***clockwise*** until the arm begins to move smoothly at the same speed as it did when you raised it to the open position. As the arm lowers and trips the limit switch, it should smoothly drift to full close position. (You may need to turn the ***close brake valve clockwise*** later to make a smooth drift from limit contact to full close position.)

4. The next valve to be adjusted is the ***open brake valve***; which is the second brake valve to the left of the relief valve. At this time the arm is now in the closed position.
   a. To adjust the ***open brake valve*** you will first need to turn the adjuster ***counter clockwise*** to the top of its adjustment.
   b. Give the operator an "Open" command and slowly begin turning the ***close brake valve*** adjuster screw ***clockwise*** until the arm begins to move open smoothly and at the same speed as it did when you lowered it to the close position. As the arm raises and trips the limit switch, it should smoothly drift to full open position. (You may need to turn it clockwise later to make a smooth drift to stop.)

5. Adjust the ***manual bypass valve*** by raising the arm to approximately 45 degrees and press the "Stop" button.
   a. Turn the ***bypass needle valve***, adjuster screw ***clockwise*** until it bottoms out.
   b. Pull out on the ***manual by-pass*** knob and lock it open by twisting it 45 degrees to the right.
   c. Slowly turn the ***needle valve*** adjuster screw ***counter clockwise*** until the arm begins to drift close at a smooth slow speed. Tighten the lock nut for the ***needle valve adjuster screw*** and turn the manual bypass knob 45 degrees to the left to lock it in place.

6. Cycle the operator open and close several times too verify settings and tighten the ***brake valve*** lock nuts.

6623 South 228th St.
Kent, WA 98032-1872
800-321-9947

LIMITED WARRANTY

1. Warranty.

Hy-Security Gate, Inc. ("HySecurity") warrants that at the time of sale each of its products will, in all material respects, conform to its then applicable specification and will be free from defects in material and manufacture. This warranty does not extend to items listed as "accessories" in HySecurity's price list, when those items carry another manufacturer's name plate and they are not a part of the base model. HySecurity disclaims all warranties for such accessory components, which carry only the original warranty, if any, of their original manufacturer. HySecurity hereby assigns its rights under such manufacturer warranties—to the extent that such rights are assignable—to Buyer. The following additional durational warranties apply to HySecurity's products. The term of these additional warranties is determined by whether (1) the product is purchased through an authorized HySecurity distributor and (2) whether a timely and complete warranty registration is submitted to HySecurity. It is therefore important that you register your product with HySecurity within the 60 day period described below.

1(a) Warranty Items (Registered Gate Operators Purchased from Authorized Distributors)

For any gate operator product that is purchased from an authorized HySecurity distributor (this excludes product purchased through internet resellers or any distributor not authorized by HySecurity), if the online Warranty registration is completed at www.hysecurity.com/warranty within 60 days of the date of purchase by the dealer/installer and returned to HySecurity within the same 60-day period, the following Warranty terms will apply. HySecurity will warrant that the product will remain serviceable for the following periods:

a. Hydraulic Gate Operators: Five Years or 500,000 gate cycles (whichever occurs first) after the date of installation, or

b. Electromechanical Barrier Arm Operators: Two Years or 1,000,000 gate cycles (whichever occurs first) after the date of installation, or

c. Electromechanical Slide and Swing operators: Five Years after the date of installation—unless installed in a single family residential application, in which case the warranty term shall be Seven Years after the date the product is shipped from HySecurity; provided that the Five Year warranty period will not extend beyond Seven Years from the date that the product was shipped from HySecurity. This warranty does not apply to the components described below, which have the shorter warranty period indicated:

d. Hydraulic Gate Operator Drive Wheels including XtremeDrive™ wheels and rack: Two Years from date of installation.

e. Batteries used in all D.C. operators, inverters or other battery powered devices: One Year from date of shipment from HySecurity.

f. Items subject to normal wear including, but not limited to, chains, belts, idler wheels, sprockets, fuses and motor brushes: One Year from date of installation.

1(b) Warranty Items (Operators Not Purchased from an Authorized Distributor or Registered within 60 Days)

For any gate operator product that is not purchased from an authorized HySecurity distributor or for which the online Warranty registration or warranty registration form sent with every HySecurity operator was not filled out completely or not returned to HySecurity within 60 days of the date of purchase by the dealer/installer, the following One-Year Warranty will apply to that product: HySecurity warrants that the product will remain serviceable for the following periods, which begin on the date that the product was shipped from HySecurity:

a. All Gate Operators: One Year or 100,000 gate cycles whichever comes first.

b. Hydraulic Gate Operator Drive Wheels: One Year

1(c) Replacement Parts

HySecurity warrants that replacement parts (whether new or reconditioned) will remain serviceable for One Year from the date that the product was shipped from HySecurity.

1(d) Limitations and Exclusions Applicable to Each of the Preceding Warranties

The preceding warranties shall not apply to equipment that has been (1) installed or maintained improperly or contrary to instructions; (2) subjected to negligence, accident, vandalism, or damaged by severe weather, wind, flood, fire, or war; or (3) damaged through improper operation, maintenance, storage or abnormal or extraordinary use or abuse. Any modification made to products will void the warranty unless the modifications are approved in writing by HySecurity, in advance of the change (this exclusion does not apply to normal installation of approved accessories and/or protective devices or sensors). It is the responsibility of the distributor, installer, or End User to ensure the software version in the operator is maintained to the latest revision level.

THESE ARE THE ONLY WARRANTIES GIVEN BY HYSECURITY AND ARE IN PLACE OF ALL OTHERS.

These warranties extend to HySecurity's Distributors, to the Dealer/Installer, and to the End User of the product following installation. They do not extend to subsequent purchasers. Dealer/Installers or End Users may receive a replacement HySecurity Warranty form by calling HySecurity at 800-321-9947.

2. Exclusion of Other Warranties.

The warranties contained in Section 1 are the exclusive warranties given by HySecurity and supersede any prior, contrary or additional representations, whether oral or written. Any prior or extrinsic representations or agreements are discharged or nullified.

HYSECURITY HEREBY DISCLAIMS AND EXCLUDES ALL OTHER WARRANTIES—WHETHER EXPRESS, IMPLIED, OR STATUTORY—INCLUDING ANY WARRANTY OF MERCHANTABILITY, ANY WARRANTY OF FITNESS FOR A PARTICULAR PURPOSE, AND ANY IMPLIED WARRANTIES OTHERWISE ARISING FROM COURSE OF DEALING, COURSE OF PERFORMANCE, OR USAGE OF TRADE.

3. Buyer's Exclusive Remedies for Any Nonconformity.

If a HySecurity product fails to conform to the warranties in Section 1, Buyer must notify and order replacement parts from the Distributor through which the product was purchased within a reasonable time and in no event more than thirty (30) days after the discovery of the nonconformity. HySecurity will investigate and, in the event of a breach, will provide, within a reasonable period of time, one of the following: (1) repair or replacement of any nonconforming products or components or (2) refund of the price upon return of the nonconforming items. Replacement goods will conform to this warranty for the unexpired duration of the warranty period for the original, nonconforming product. HySecurity reserves the right to supply used or reconditioned material for all warranty claims. This warranty does not cover or extend to any incidental expenses, including labor, shipping, travel time or standby time, that are incurred for inspection or replacement of any nonconforming items. As a condition of warranty coverage, warranty claims must be submitted in accordance with the following paragraph.

THE REMEDY SELECTED BY HYSECURITY IN ACCORDANCE WITH THIS PARAGRAPH SHALL BE THE EXCLUSIVE AND SOLE REMEDY OF BUYER FOR ANY BREACH OF WARRANTY. IN NO EVENT SHALL HYSECURITY BE OBLIGATED TO INDEMNIFY BUYER FOR ANY BREACH OF WARRANTY.

For warranty coverage, you must follow the procedures described on HySecurity's form, "RMA Procedures." A current version of the form is available from HySecurity.

4. Exclusion of Consequential and Incidental Damages.

IN NO EVENT SHALL HYSECURITY BE LIABLE FOR ANY INCIDENTAL, SPECIAL, INDIRECT, OR CONSEQUENTIAL DAMAGES, WHETHER RESULTING FROM NONDELIVERY OR FROM THE USE, MISUSE, OR INABILITY TO USE THE PRODUCT OR FROM DEFECTS IN THE PRODUCT OR FROM HYSECURITY'S OWN NEGLIGENCE OR OTHER TORT.

This exclusion applies regardless of whether such damages are sought for breach of warranty, breach of contract, negligence, or strict liability in tort or under any other legal theory. This exclusion does not apply to claims for bodily injury or death.

5. Severability.

If any provision of this warranty is found to be invalid or unenforceable, then the remainder shall have full force and effect, and the invalid provision shall be partially enforced to the maximum extent permitted by law to effectuate the purpose of the agreement.

6. Applicable Law.

This Warranty will be interpreted, construed, and enforced in all respects in accordance with the laws of the State of Washington, without reference to its choice of law principles. The U.N. Convention on Contracts for the International Sale of Goods will not apply to this Warranty.