DC Power Supply with HyCharger DC™

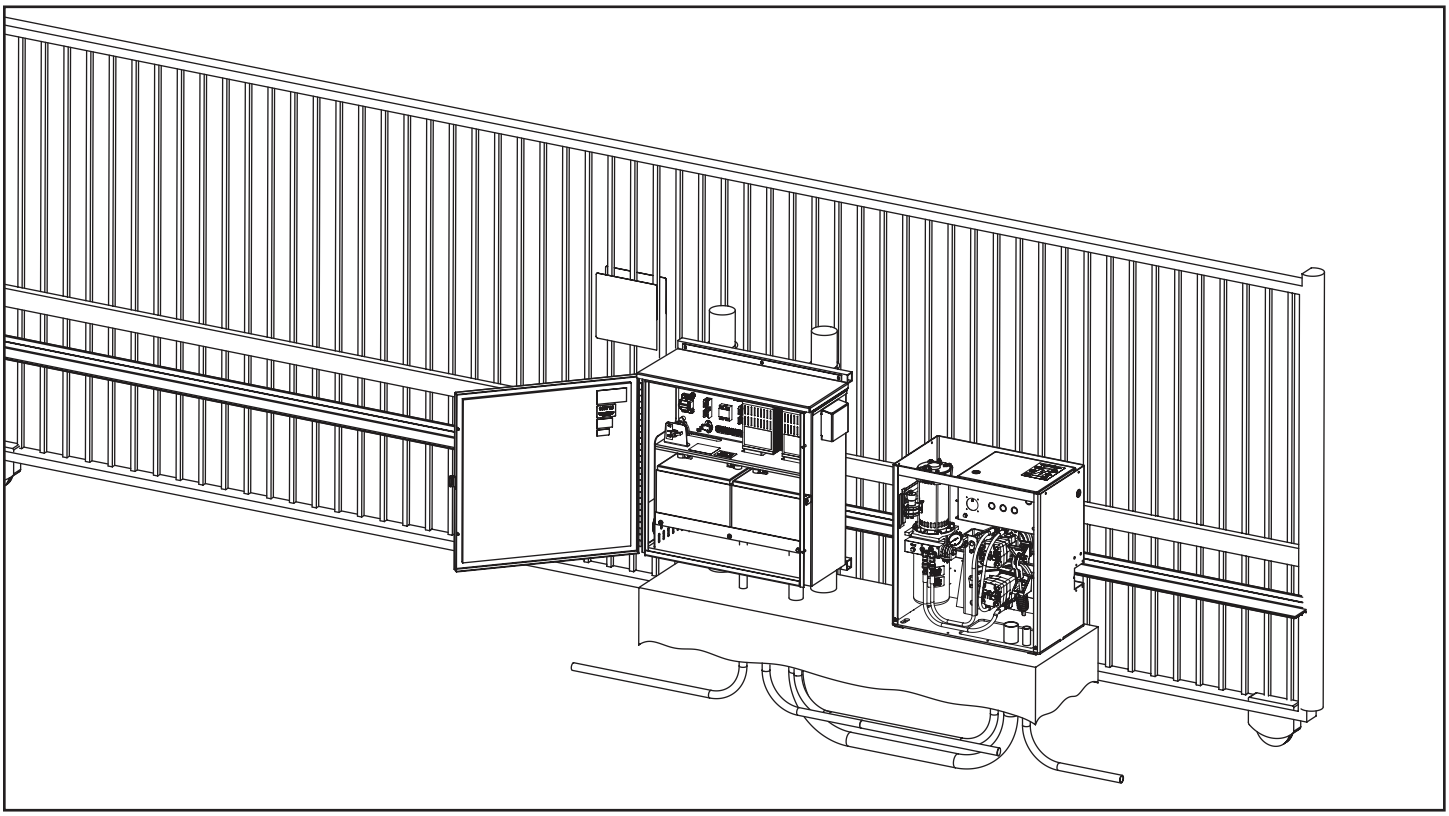

Supplement

MX3645-01 Revision B

CAUTION

The DC Power Supply with HyCharger DC™ is a complete redesign of the UPS option for HySecurity hydraulic gate operators. **The wiring and circuitry requirements have changed!** Read "Site Considerations" on page 13 before running wires, installing circuit breakers, and connecting AC power.

This document is a supplemental document that provides *site planning specifications and other references* for the DC Power Supply with HyCharger DC. For safety considerations and information specific to your gate operator, refer to the HySecurity gate operator's *Installation Instructions* and *Programming and Operations Manual.*

HySecurity®

Simple. Reliable. Secure.®

HyCharger DC Components 115V & 208/230V

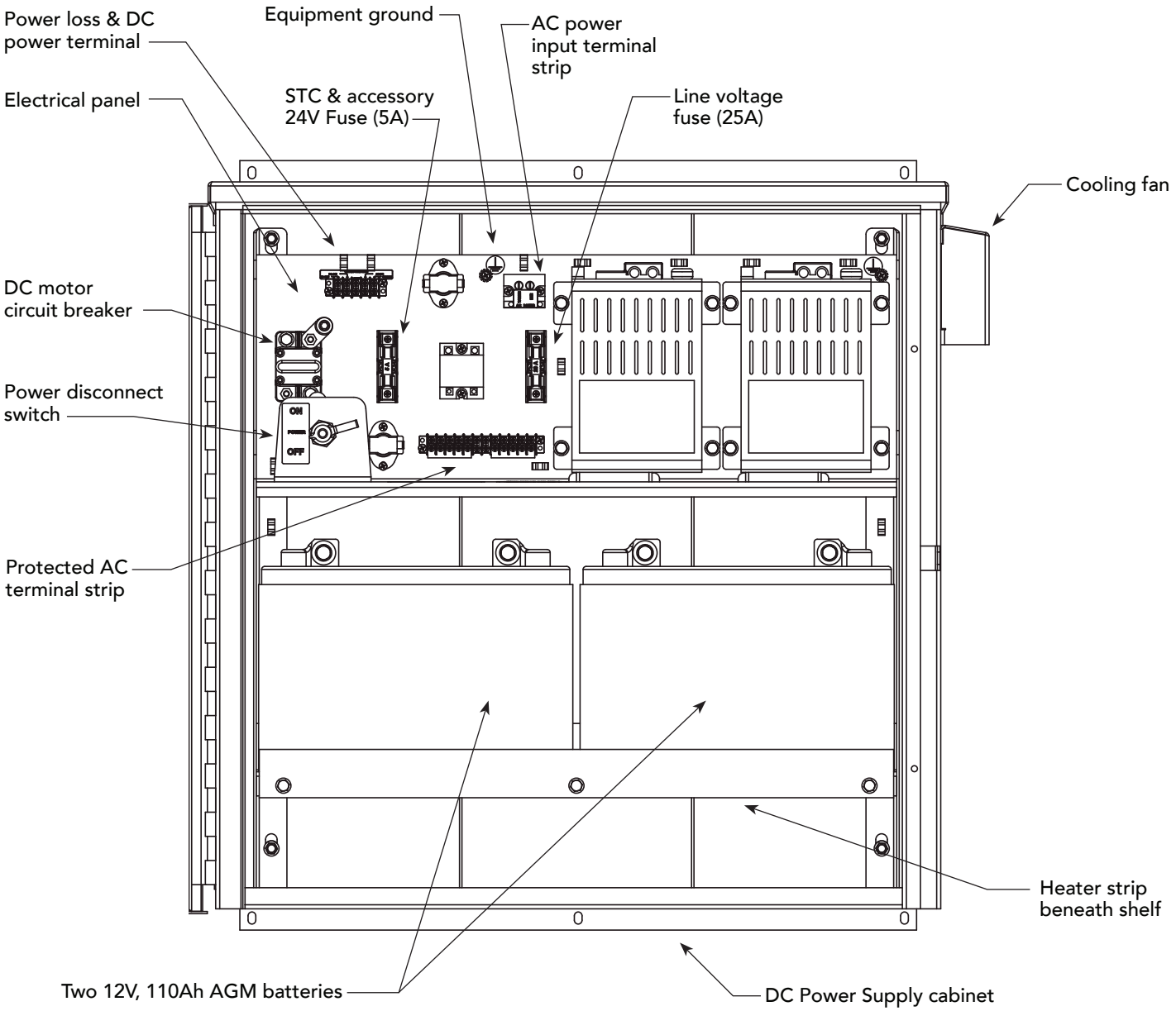

Internal & external wiring not shown.

Drawing is not to scale

 © 2016 www.hysecurity.com

DC Power Supply Cabinet Mounted on Posts

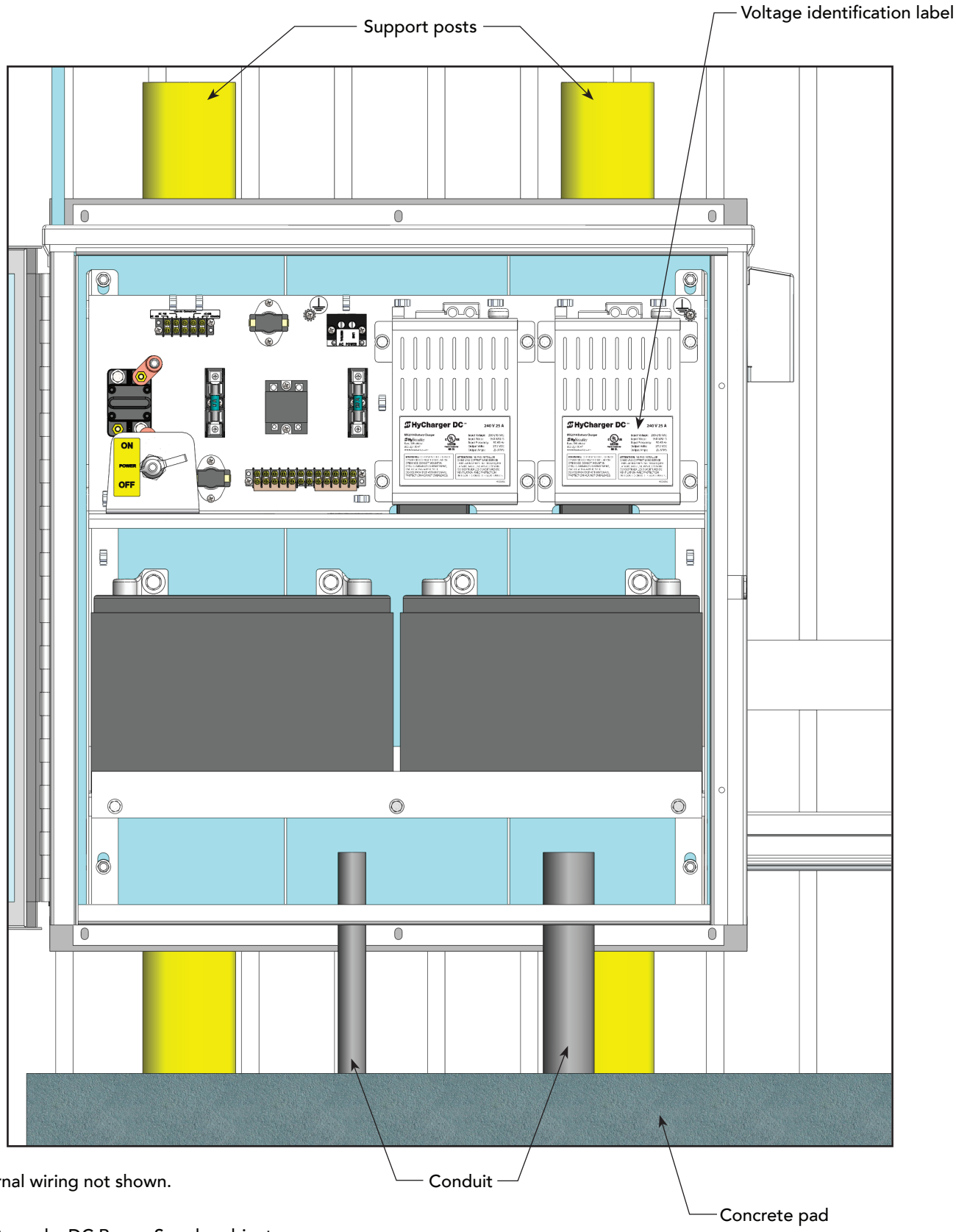

Internal & external wiring not shown.

Drawing is not to scale. DC Power Supply cabinet can also be wall-mounted.

Installer's Checklist For DC Power Supply with HyCharger DC

Date Installed: _____ **Gate Operator:** _____

Site Location: _____ **Serial Number:** _____

Date Installed DC Power Supply with HyCharger DC: _____ **Serial Number:** _____

Customer Name: _____

Mailing Address: _____ **Inspected by:** _____

_____ **Date Inspected:** _____

Phone Contact: _____ **Phone contact number:** _____

	Checked	Initials
1. Site Planning	❑	_____

Concrete pad poured.

Conduit and appropriate wire size installed. Refer to gate operator manual for wire size charts

2. Safety	❑	_____

Review *Important Safety Information*.

Warning labels apparent and affixed properly.

Area around equipment free of debris, cabinets/chassis include locking mechanism.

3. Electrical	❑	_____

3.1 Measure Input Voltage

Single phase: (check all boxes that apply),

❑ 115V ❑ 208/230V ❑ 50Hz ❑ 60Hz ❑ 20A

3.2 Input Power Connections

Input power properly connected.

L1 and L2 / Neutral and T1 and T2, Ground wired per illustration on "UPS to Gate Operator Wiring" on page 13.

3.3 Grounding

- NFPA 780 Standard for the Installation of Lighting Protection Systems.
- Solid copper ground rod (⅜-inch diameter, 10 ft length) driven into ground within 3 ft of the operator.
- Single length of unspliced 6AWG copper wire less than 3 ft long attached to lug nut in operator.

3.4 Gate operator using Smart Touch Controller has the most current software loaded.

3.5 Configure the Smart Touch Controller

- Set the Power Loss function (AP) in the User Menu. See page 22.
- Access the Installer Menu and select the type of power that the operator uses to AD 2. See page 24.

4. Review gate operator installation checklist	❑	_____
5. Photographs of installation and End User Demo	❑	_____

© 2016 www.hysecurity.com

Contents

Installer's Checklist For DC Power Supply with HyCharger DC iv

Welcome to HySecurity 1

Introducing HyCharger DC 1
Intelligent Features 2
Notices and Bulletins 2
Contact Information 2
Supplemental Documents 2
IMPORTANT SAFETY INFORMATION 3
Prevent Electrical Shock 3
Emergency Stop and Manual Release 4
Hazardous Materials and Proper Disposal 4
Safety Notices 5
Common Industrial Symbols 5
Tools Required 6

Installation 7

Site Overview & Planning: SlideDriver 7
SlideDriver: Right Handing Configuration 10
SlideDriver: Left Handing Configuration 11
Battery Safety and Longevity 12

Power 13

Site Considerations 13
UPS to Gate Operator Wiring 13
Installing the Earth Ground 14
Wiring AC Power: 115V HyCharger DC 15
Wiring AC Power: 230V HyCharger DC 16
HyCharger DC Power 17
Gate Operator AC Power 17
Turning the Power ON 17
Test the Gate Operator 18

Display & Menu Options **19**
Initial Setup 19
Gate Operator Display and Keypad 19
Menu Mode and the STC Keypad 20
Menu Mode Navigation 20
Run Mode and the STC Keypad 21
Check Time and Date 21
Stop the STC Status Display Scroll 21
Change the Contrast on the 7-Segment STC Display 21
AC Power Loss Function: User Menu 22
User Menu, AP: Table 1, OLED and 7 Segment Displays 22
AP Menu, AC Loss: Table 2, Configuring DC Power 23
Installer Menu 24
Installer Menu: Table 3, OLED and 7 Segment Displays 24
Troubleshooting **25**
System Diagnostic Messages 25
Troubleshooting Codes: Table 6 26
Mechanical Issues and Hydraulic Issues 26
General Maintenance **27**
Battery Maintenance 27
Replacing the Batteries 28
Specifications 30
Warranty ..... back cover

Welcome to HySecurity

Thank you for your recent purchase of the HyCharger DC™. Housed in our HySecurity Gate, Inc. DC Power Supply Cabinet, the HyCharger DC assures operational integrity at your hydraulic gate site. This supplemental manual provides an overview for site planning and presents the power requirements and operational programming available with the HyCharger DC system.

For safety information and additional instructions regarding the hydraulic operator powered by the unit, refer to your gate operator's product manual.

HySecurity Gate, Inc. Headquarters in Kent, WA

Introducing HyCharger DC

The latest offering for DC-powered hydraulic operators meets or exceeds ETL requirements and provides unparalleled user benefits:

Smart – Smart charge system using high efficiency switching technology that optimizes battery conditioning, storage capacity and battery life.

Power – Supplies 50A of 24VDC power on continuous basis to both motor drive circuit or charger circuit. Burst mode supplies additional energy to gate operator when needed.

Robust – The electronics and batteries are rated for temperatures ranging from -40°F to 158°F (-40°C to 70°C). A heater strip attached to the base of the shelf automatically turns on to keep batteries at optimal operating temperature.

Adaptable - Easy replacement of existing, older DC chargers in HySecurity DC Supply Cabinets. If you are interested in replacing an older DC charger, contact HySecurity for replacement parts:
MX2890-01 HyCharger DC 230V or MX2890-02 HyCharger DC 115V

Intelligent Features

- Multi-stage charging
- Redundant chargers
- Battery Voltage sensing

Fast recharge - After AC power is restored, batteries are completely recharged in as little as 2 hours (12 hours when operating a high-traffic gate).

Temperature control - A heater and fan are standard features and automatically turn on to keep the interior of the cabinet at temperatures that are optimal for maintaining and sustaining a long battery life and charge.

START software and diagnostics - With START software loaded on a PC laptop computer, you have an invaluable management tool for all HySecurity operators. To download this free software, visit the HySecurity website: www.hysecurity.com.

Notices and Bulletins

Installers should visit HySecurity's online Technical Support page at www.hysecurity.com or contact HySecurity prior to installing product to make sure they have received the most up-to-date information.

Contact Information

Before contacting your distributor or HySecurity Technical Support, obtain the serial number of your operator.

Qualified HySecurity distributors are experienced and trained to assist in resolving any problems. For the name of a qualified distributor near you, contact HySecurity at 800-321-9947.

For information about HySecurity training for installers, maintenance personnel, and end users, refer to the company website at www.hysecurity.com.

Supplemental Documents

The product literature is comprehensive and contains information needed to plan, install, operate and maintain the HyCharger DC. Additional general information concerning HySecurity hydraulic gate operators or the HyCharger DC can be obtained from the following:

- HySecurity web site www.hysecurity.com - Contains links to the product catalog, product order form, operator manuals, operator software downloads, technical support bulletins and other useful information.
- S.T.A.R.T. - Smart Touch Analyze and Retrieve Tool - User's Guide (D0049) detailing the extensive software, diagnostic and troubleshooting capabilities of the Smart Touch Controller board.
- Technical Bulletins (as applicable).

NOTE: Technical Bulletins are automatically issued to registered users of HySecurity products. The product warranty registration card can be filled out online at www.hysecurity.com.

 © 2016 www.hysecurity.com

IMPORTANT SAFETY INFORMATION

WARNING

Read all the product safety information prior to installation. Automatic gate operators move the gate with high force and can cause serious injury and death! Make sure the automatic gate operator is installed to reduce the risks of entrapment. Verify the gate operator is installed to comply with all safety standards and local and federal regulations.

Understand that you as the site designer, installer, maintenance crew, or owner/user must consider the risks associated with gate operators. Be sure to take responsibility, read, and follow the *Important Safety Information* found in the gate operator's manual and review all the literature that accompanies the product.

Hazards, associated with automatic gates, can be reduced with proper site design, installation, and use. It is important that only qualified installers handle the installation of the HySecurity equipment and gate operators.

A "qualified" installer has one of the following:

- A minimum of three years experience installing similar equipment
- Proof of attending a HySecurity Technical Training seminar within the past three years
- Significant manufacturer endorsements of technical aptitude in gate operator installation and operation

Underwriter Laboratories (UL) and the American Society for Testing and Materials (ASTM) are responsible for current safety standards and regulations regarding automatic vehicular gate operators. To pass certification, all aspects of gate operator and gate installation must comply with the appropriate safety standards.

For the most up-to-date ASTM F2200 Gate and Fence Standards, refer to www.astm.org

For UL 325 Safety Standards, refer to www.ul.com

Prevent Electrical Shock

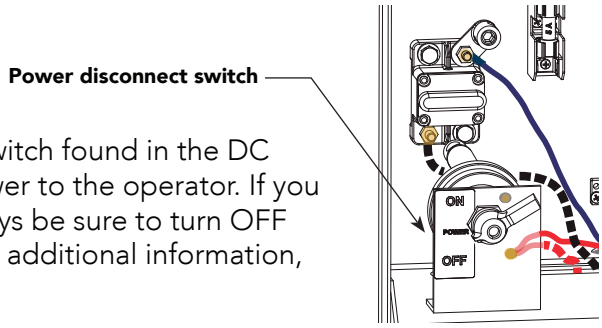

To stop the flow of electricity, turn off the main disconnect power switch found in the DC Supply Cabinet. The Power disconnect switch only disconnects power to the operator. If you are performing routine maintenance or more extensive repairs always be sure to turn OFF the main AC power to the gate operator and DC Power Supply. For additional information, refer to *Important Considerations for DC-Powered Operators*.

WARNING

Residual amounts of electricity reside in the batteries even when the AC power switches are turned off. If shorted, the batteries can deliver very high currents. Exposed connector pins must be handled with extreme care and caution; they can be easily shorted against any metal surface. If a short circuit persists beyond a second, connectors, cables, and tools can be damaged or destroyed. Fire and personal injury may result and potential for electrical shock exists.

This manual is a supplement to the gate operator. Read and follow the *Important Safety Information* found in the gate operator's *Programming and Operations Manual*.

Emergency Stop and Manual Release

No emergency stop or manual release is found in the DC Power Supply cabinet. The gate operator's emergency stop button is strategically placed on the outside of the gate operator and its manual release location is dependent on the type of gate operator. Refer to the gate operator's product manual for more information.

Hazardous Materials and Proper Disposal

Be aware of the international, federal, and local codes in your area and how best to handle hazardous waste materials.

HyCharger DC uses sealed, state-of-the-art Absorbed Glass Mat (AGM) batteries and highly recommends replacing used batteries with new AGM-type batteries.

CAUTION

If the gate operator has a battery backup system, the batteries contain materials that are considered hazardous to the environment. Proper disposal of the battery is required by federal law. In the U.S.A., refer to federal EPA guidelines for proper hazardous waste disposal.

To reduce the risk of fire or injury to persons:

- Observe the polarity between the batteries and charging circuit.
- Never mix battery sizes, types, or brands. Only sealed AGM style batteries should be used.
- Exercise care in handling batteries. Be aware that the metal found in rings, bracelets, and keys can conduct electricity, short the batteries, and cause potential injury. Remove metal objects from your person before working or handling items in the DC Supply Cabinet.
- Do not open or mutilate the batteries. Battery cells contain corrosive materials which may cause burns and other injuries. The material within batteries is toxic and considered hazardous waste material.
- Always dispose of batteries properly. Do NOT place batteries in fire. The battery cells may explode. Follow federal guidelines for proper disposal of hazardous waste.
- Replace batteries according to the instructions found in *DC Battery Replacement*.

© 2016 www.hysecurity.com

Safety Notices

The following four levels of safety notices are used where applicable within this manual; each notice contains information specific to the situation.

DANGER

Indicates death or serious injury will occur if the hazardous situation is not avoided.

WARNING

Indicates death or serious injury could occur if the hazardous situation is not avoided.

CAUTION

Indicates mild or moderate injury could occur if the hazardous situation is not avoided.

NOTICE: Indicates damage to equipment is probable if the hazardous situation in not avoided.

Common Industrial Symbols

The following international safety symbols may appear on the product or in its literature. The symbols are used to alert you to potential personal injury hazards. Obey all safety messages that follow these symbols to avoid possible injury or death.

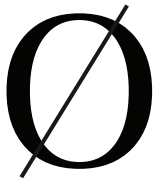

Electrical Phase Symbol

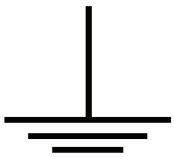

Ground Symbol

- Danger - Keep Away

Entrapment Zone

Possible Pinch Point

Attention - Take Note -

Tools Required

- Standard socket set (9/16-inch combo wrench, 7/16-inch socket wrench, two 7/16-inch box end wrenches)
- Crescent wrench
- Phillips head screwdriver
- Flat head screwdriver
- Wire cutter and wire nuts

© 2016 www.hysecurity.com

Gate operators equipped with the HyCharger DC option are powered by two 12-Volt, 110Ah DC batteries which, when AC power loss occurs, maintain a true Uninterrupted Power Supply (UPS) system. When the local AC power fails, the UPS back up system continues to move the gate. To review system features, refer to "Introducing HyCharger DC" on page 1. See specifications on the back cover for backup gate travel capacity.

NOTE: The HyCharger DC option is not available for gate operators using Variable Speed Drives (VFD).

Site Overview & Planning: SlideDriver

- Place cabinet within 10 ft (3 m) of the gate operator. Contact HySecurity Technical Support if distance between gate operator and HyCharger DC needs to be greater than 10 feet.
- Locate concrete footings a minimum of 16 inches (41 cm) deep or to frost line per local codes.
- At minimum, use 4-inch (10 cm) diameter support posts for DC Power Supply cabinet. Support posts and hardware are not provided by HySecurity. Neither is wall mounting hardware.
- DC Power Supply cabinet can also be wall-mounted.
- Provide additional 2-inch (5 cm) round conduit for wires between the DC Power Supply cabinet and gate operator. Six wire conductors are required:
  - Control Panel: Two each, 14 AWG minimum
  - Control Panel Power: Two each, 14 AWG minimum
  - Motor: Two each, 6 gauge minimum for 1 hp models (up to 10 feet) or 2 gauge minimum for 2 hp models or runs longer than 10 feet (3 m).

Left hand gate shown.
For a right hand installation, place the DC Power Supply on the opposite side of the SlideDriver.

CAUTION

Do NOT cut, drill or otherwise alter the gate operator base; doing so may compromise the structural integrity and may void the limited warranty.

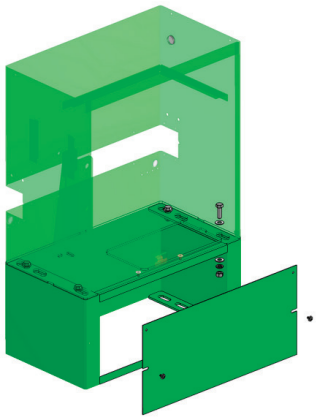

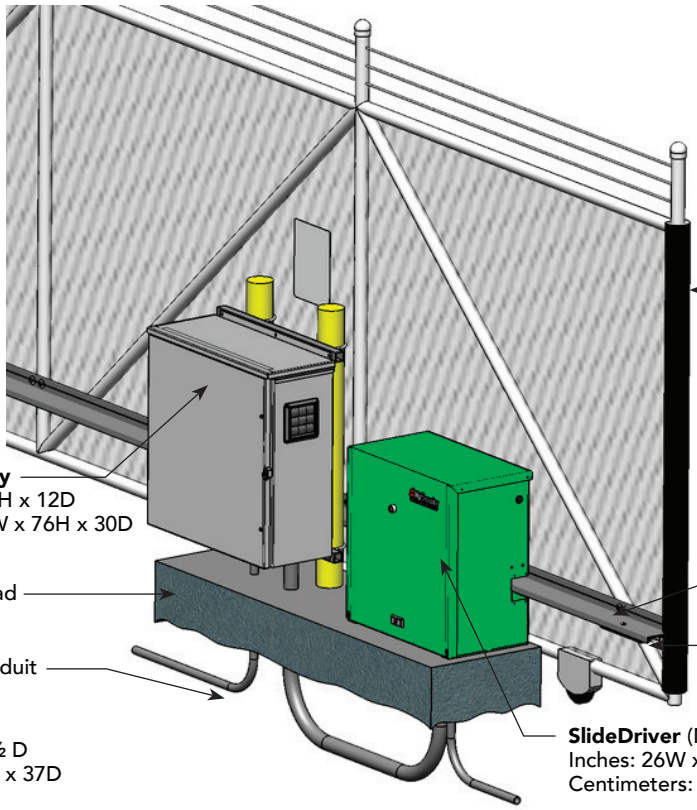

Site Overview & Planning: SlideDriver, continued

NOTE: Consult with local site engineers for pad size if pole height extends beyond 54 inches (137 cm)

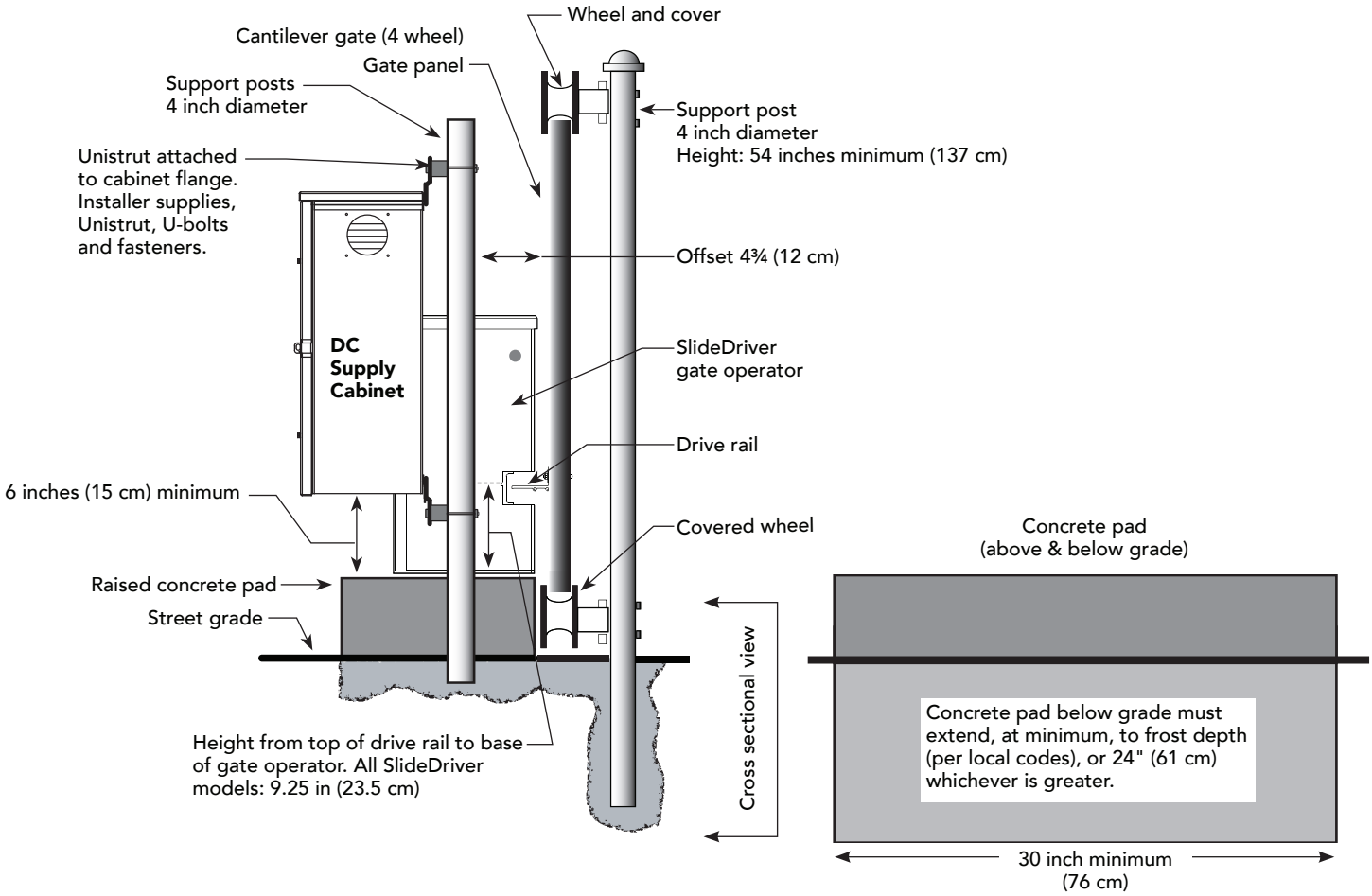

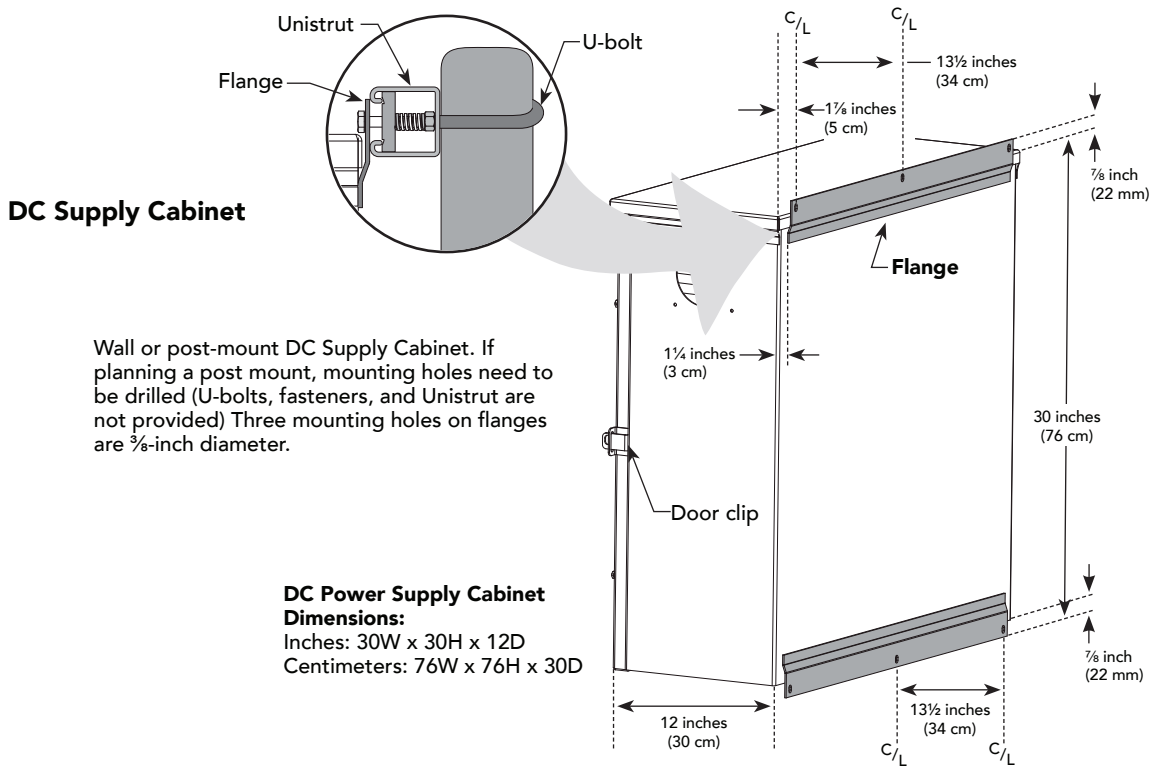

Wall or post-mount DC Supply Cabinet. If planning a post mount, mounting holes need to be drilled (U-bolts, fasteners, and Unistrut are not provided) Three mounting holes on flanges are ⅜-inch diameter.

DC Power Supply Cabinet Dimensions:
Inches: 30W x 30H x 12D
Centimeters: 76W x 76H x 30D

Site Overview & Planning: SlideDriver, continued

CAUTION

If you cut, drill, or alter the chassis, you will void the Warranty.

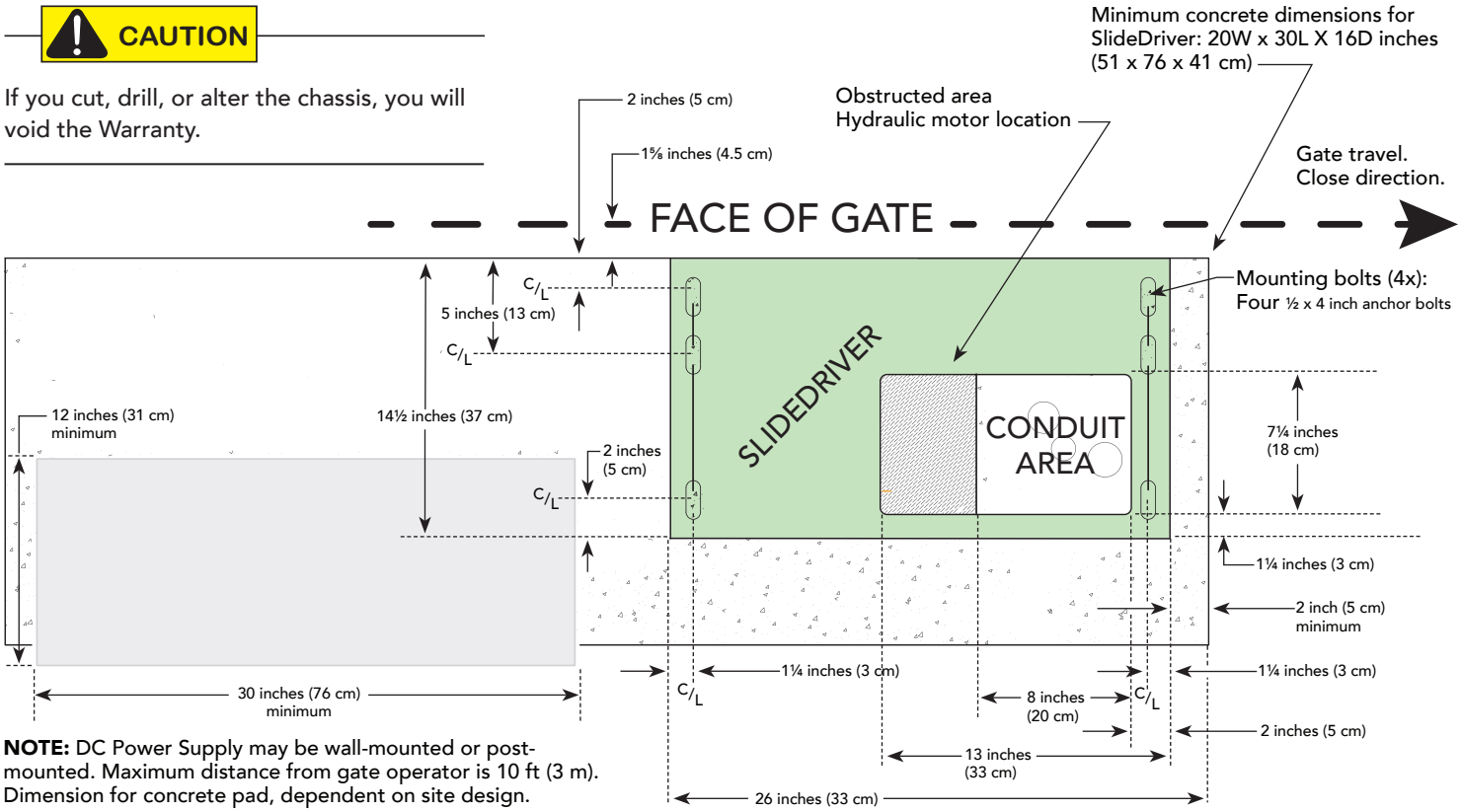

NOTE: DC Power Supply may be wall-mounted or post-mounted. Maximum distance from gate operator is 10 ft (3 m). Dimension for concrete pad, dependent on site design.

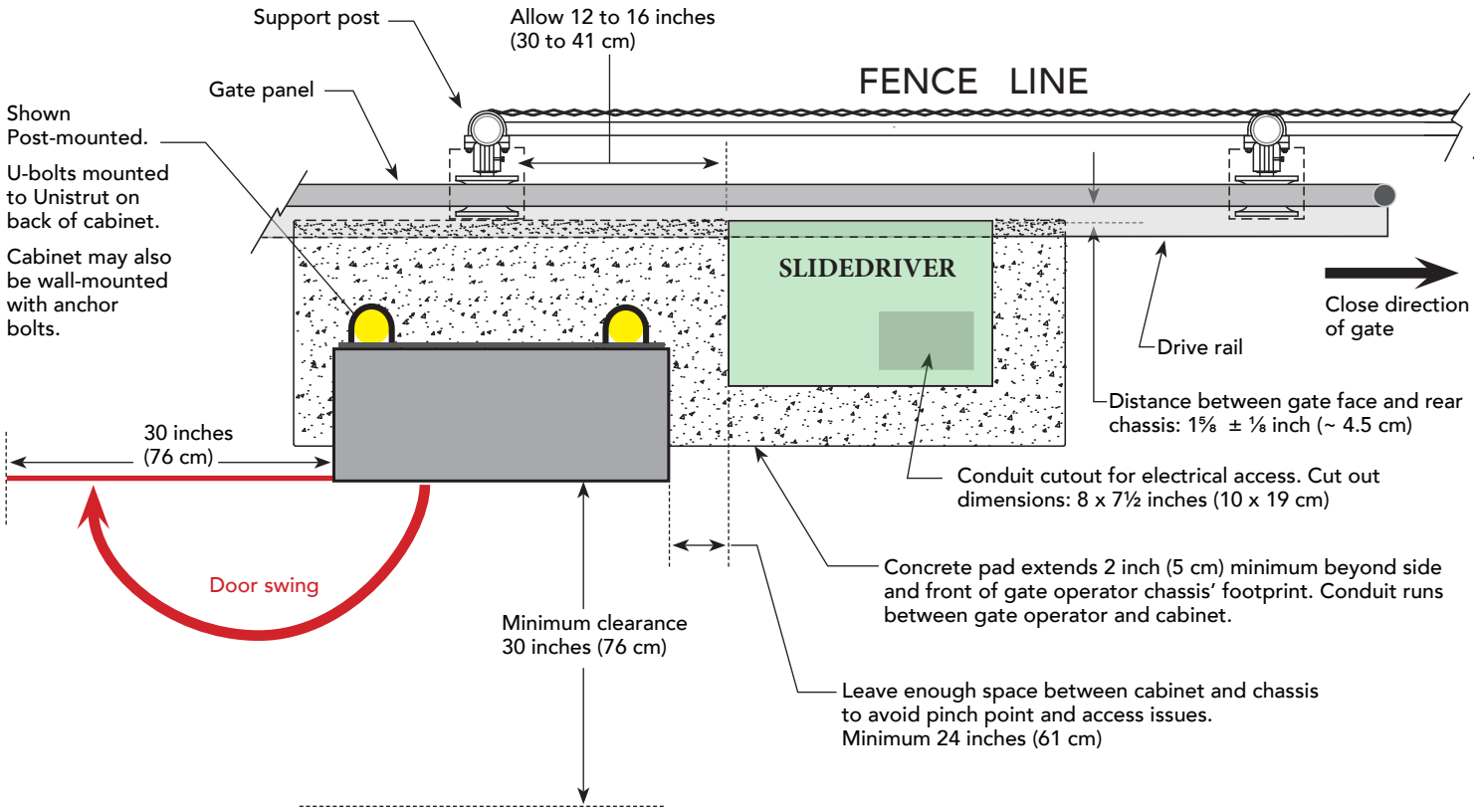

Site Overview & Planning: SlideDriver, continued

Transparent views of DC Supply Cabinet and SlideDriver

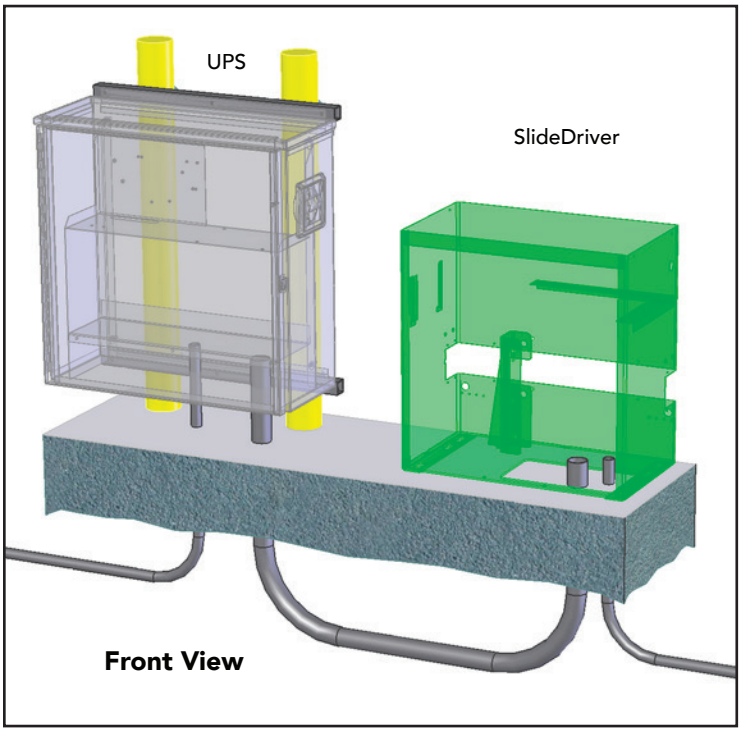

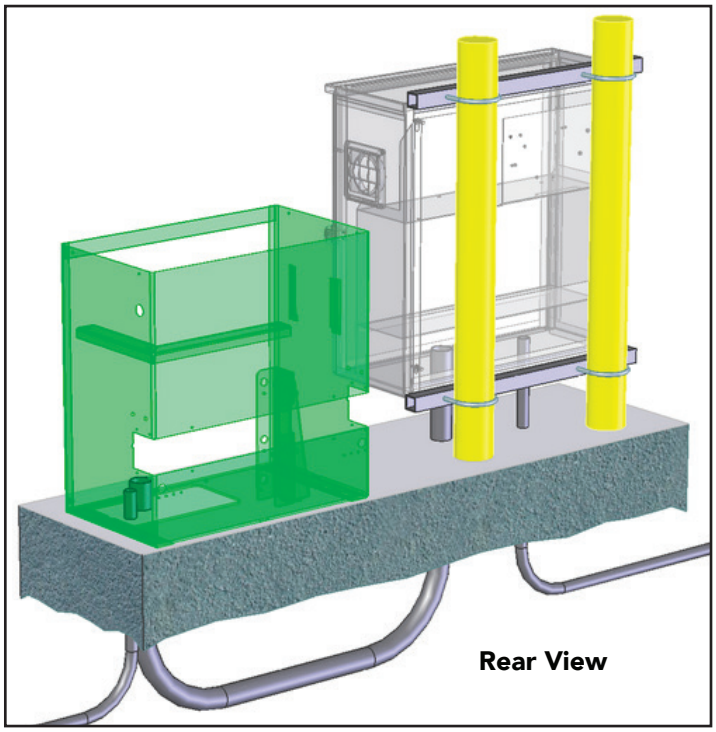

SlideDriver: Right Handing Configuration

The following illustrates the SlideDriver and HyCharger DC in a right handing configuration.

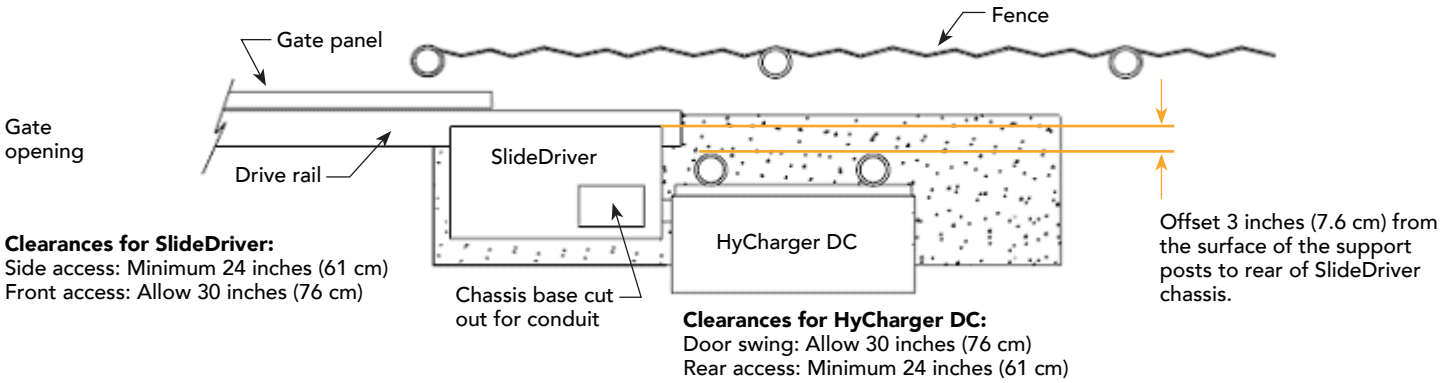

WARNING

The DC Power Supply cabinet is very heavy and requires either multiple personnel or separate lifting equipment (recommended) to facilitate wall or post mounting. Failure to comply may result in serious injury to personnel, damage to the equipment, or both.

SlideDriver: Left Handing Configuration

The following illustrates the SlideDriver and HyCharger DC in a left handing configuration.

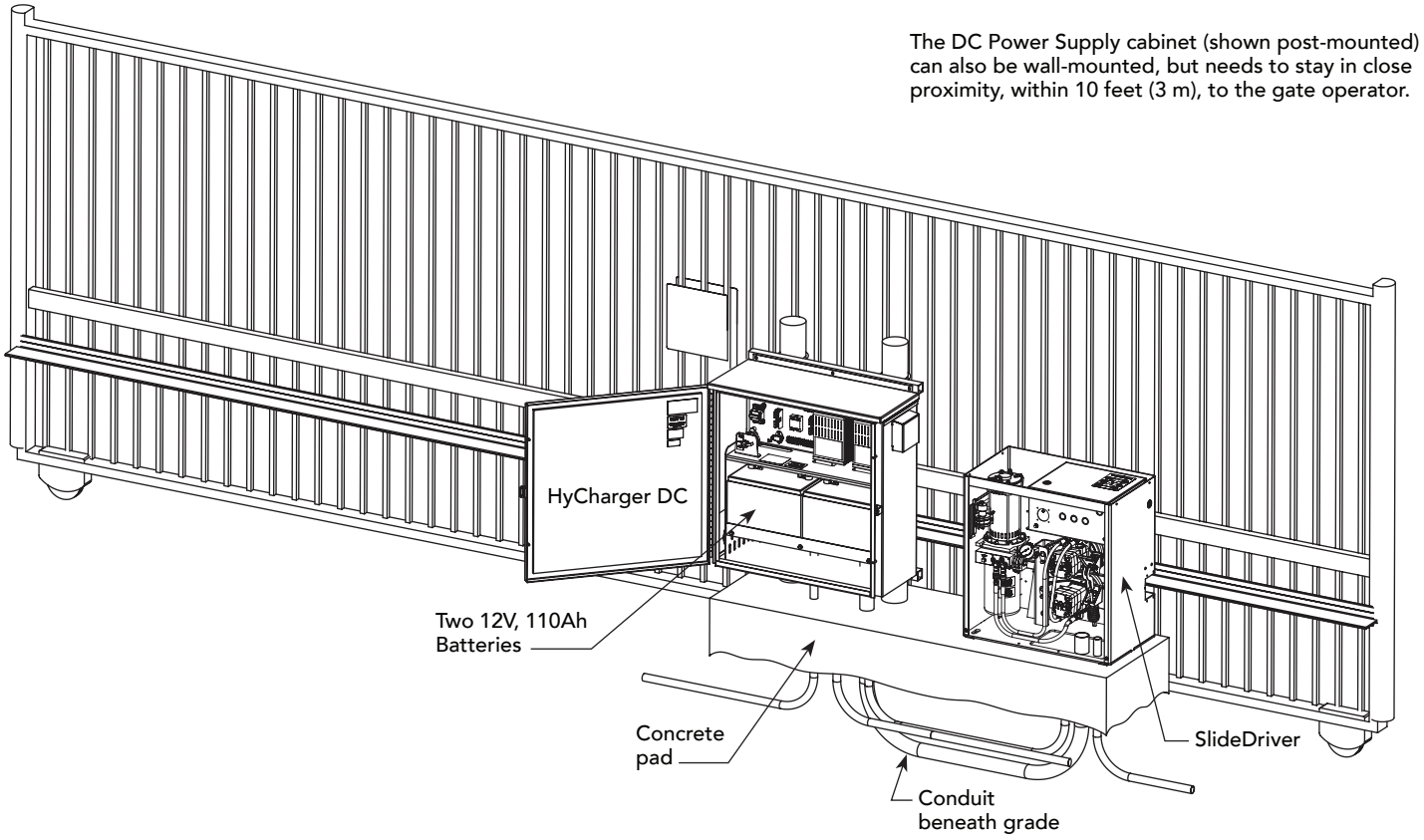

Battery Safety and Longevity

WARNING

Residual amounts of electricity reside in the batteries even when power switches are turned off. If shorted, the batteries can deliver very high currents. Exposed connector pins must be handled with extreme care and caution; they can be easily shorted against any metal surface. If a short circuit persists beyond one second; connectors, cables, and tools can be damaged or destroyed. Fire and personal injury may result and potential for electrical shock exists. Remove all metal objects from your person before servicing the DC Power Supply with HyCharger DC.

- Control of the load is important since the gate operator may need to run on backup batteries. Gates that move easily and do not bind will drain less energy from the battery, preserving capacity for more cycles during a power failure.
- Be certain to observe polarity when connecting the batteries or adding accessories. Reversed polarity may result in a non-functional operator or damage to a component. Red (+) is positive and black (-) is negative. If shorted, the batteries will generate a very high current. The batteries are connected in series on each shelf. Each battery "shelf" is connected to the other in parallel. See .
- **Variations in temperature affect battery performance!** Batteries have a finite life and age more quickly when exposed to temperatures above 80°F (27°C). A fan automatically turns on when internal cabinet temperature exceeds 110°F (43°C), +/- 5°. To provide residual heat inside the enclosure, HySecurity mounts a heater beneath each battery shelf which turns on when temperatures dip below 32°F (0°C), +/- 5°. An example of amp hour (Ah) performance is shown in the chart below.

Example of Battery Performance:	
Temperature	**Capacity**
77°F (25°C)	100%
32°F (0°C)	80%
-22°F (-30°C)	50%

- As the batteries age, they will progressively lose their capacity to store energy. If the total amount of back up capacity is critical, plan to replace the batteries after two years of use, especially in hot climates. Properly discard used batteries. See "Hazardous Materials and Proper Disposal" on page 4.
- Batteries contain sulfuric acid. Acid in your eyes, on your skin, or on your clothing can cause injury and severe burns. If batteries are dropped or damaged dispose of them properly.
- HySecurity uses permanently sealed AGM batteries which last longer than wet cell batteries and require no maintenance over their life span. Batteries are protected from over discharge by smart system charger.

How to wire the unit to AC power and locate the earth and equipment ground is described in this section.

Site Considerations

HySecurity gate operators are intended for permanent installation. Make sure you prepare the site with the following considerations:

- All electrical wiring is properly routed via conduits.
- The distance of the wiring run from the main panel to the gate operator. Make sure the wire size of the branch circuit supplying power to the gate operator is large enough to avoid excess voltage drop. Refer to wiring charts found in your gate operator manuals.
- The available power source matches the electrical requirements specified on the voltage nameplate.

CAUTION

Each gate operator is built to run on a specific line power voltage and phase. Failure to ensure the source voltage, phase and frequency match, specified for the equipment, may result is severe damage to the equipment. Significant voltage drop can occur if wire size is too small.

- Make sure to provide:
  - 115/120V: A 30-amp circuit (minimum) protected with a 30-amp Inverse Time Breaker.
  - 208/230V: A 20-amp circuit (minimum) protected with a 20-amp Inverse Time Breaker.
- Verify that the operator is electrically grounded per NFPA 780 and NEC Article 250, and local codes.

UPS to Gate Operator Wiring

The power and control wire size for gate operators with the UPS option are provided in the chart below.

Gate Operator		Max. Distance	Power Cables		Control Cables	
UPS Model	hp	to UPS Cabinet	Qty	Conductor Size (AWG)	Qty	Conductor Size (AWG)
SlideDriver 15 & 40	1	10 ft (3.05 m)	2	6	4	14
SlideDriver 30F & 80	2	10 ft (3.05 m)	2	2	4	14
SlideDriver 200	5	10 ft (3.05 m)	2	2	4	14
SwingRiser 14, 19 & 30	1	10 ft (3.05 m)	2	6	4	14
SwingRiser Twin 14, 19 & 30	2	10 ft (3.05 m)	2	2	4	14
StrongArm 14F, 20, 28, & 36	3/4	10 ft (3.05 m)	2	6	4	14
HydraLift 10 & 20	2	10 ft (3.05 m)	2	2	4	14
HydraLift 10F & 20F	5	10 ft (3.05 m)	2	2	4	14

NOTE: Contact HySecurity concerning wire size requirements for distances greater than those identified above.

Installing the Earth Ground

An earth ground refers to the grounding rod and accompanying equipment ground which need to be installed to safeguard against potential electrical shock and damage to personnel and equipment.

DANGER

The potential for lightning discharge exists with all gates, fences and gate operators. National Electric Code (NEC) - Article 250 requires a separate earth ground in addition to the required equipment ground.

HySecurity recommends grounding the operator with a separate earth ground rod (or a similar device in the case of crash products) to shield the operator against electromagnetism and other electrical signals that may cause erratic operation with, or damage to, the Smart Touch Controller and other electrical parts.

For earth grounding requirements in the U.S.A., refer to the National Fire Protection Association (NFPA) 780 - Standard for the Installation of Lightning Protection Systems. Highlights of the standard include:

- The ground rod must be UL listed copper-clad steel, solid copper, hot-dipped galvanized steel, or stainless steel. Minimum requirements: ½ inch (13 mm) diameter and 8 feet (244 cm) in length.
- The ground rod is driven into the earth (refer to local codes for proper depth requirements).
- The ground rod is electrically bonded to the chassis with a single length of un-spliced 6AWG copper wire less than 3 feet (91cm) long. Due to the large concrete foundation on crash products, make the necessary adjustments to accommodate for earth ground requirements.
- Local jurisdictions may impose other requirements above the NEC, Article 250 and NFPA 780. Consult the local codes and regulations regarding requirements in your area.

NOTICE: Properly grounding the gate operator is critical to gate operator performance and the life of its electrical components. Use sufficient wire size during installation. If you do not ground the operator with a separate earth ground, you risk voiding the HySecurity Limited Warranty.

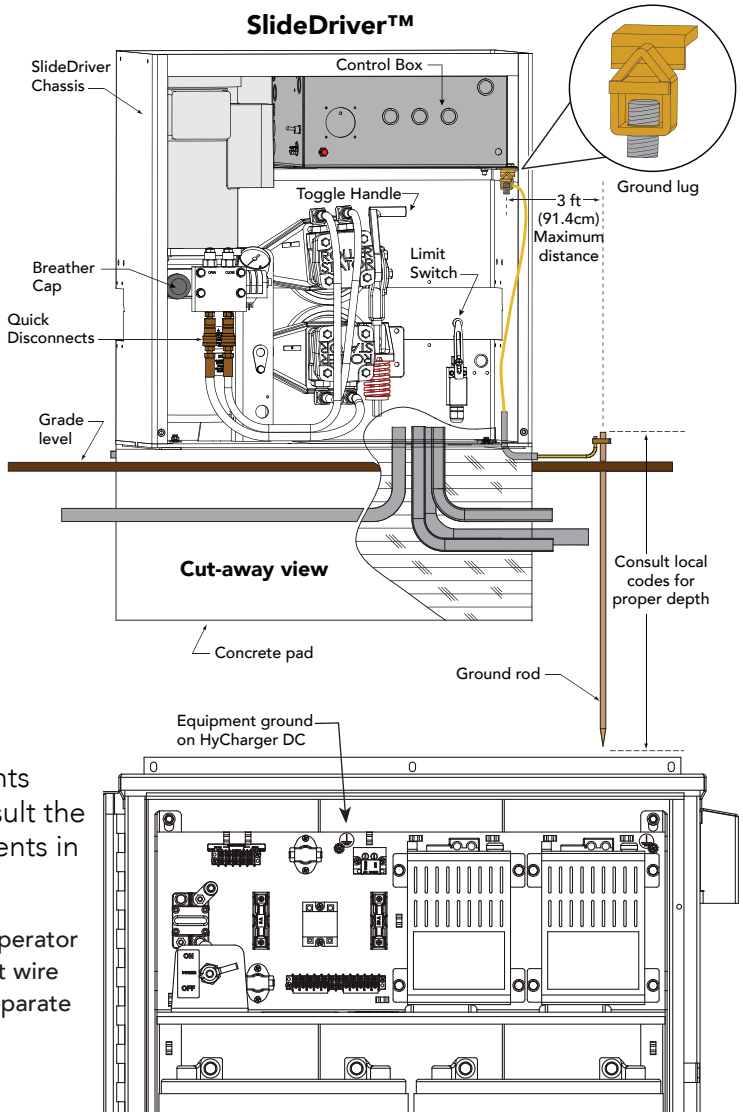

Wiring AC Power: 115V HyCharger DC

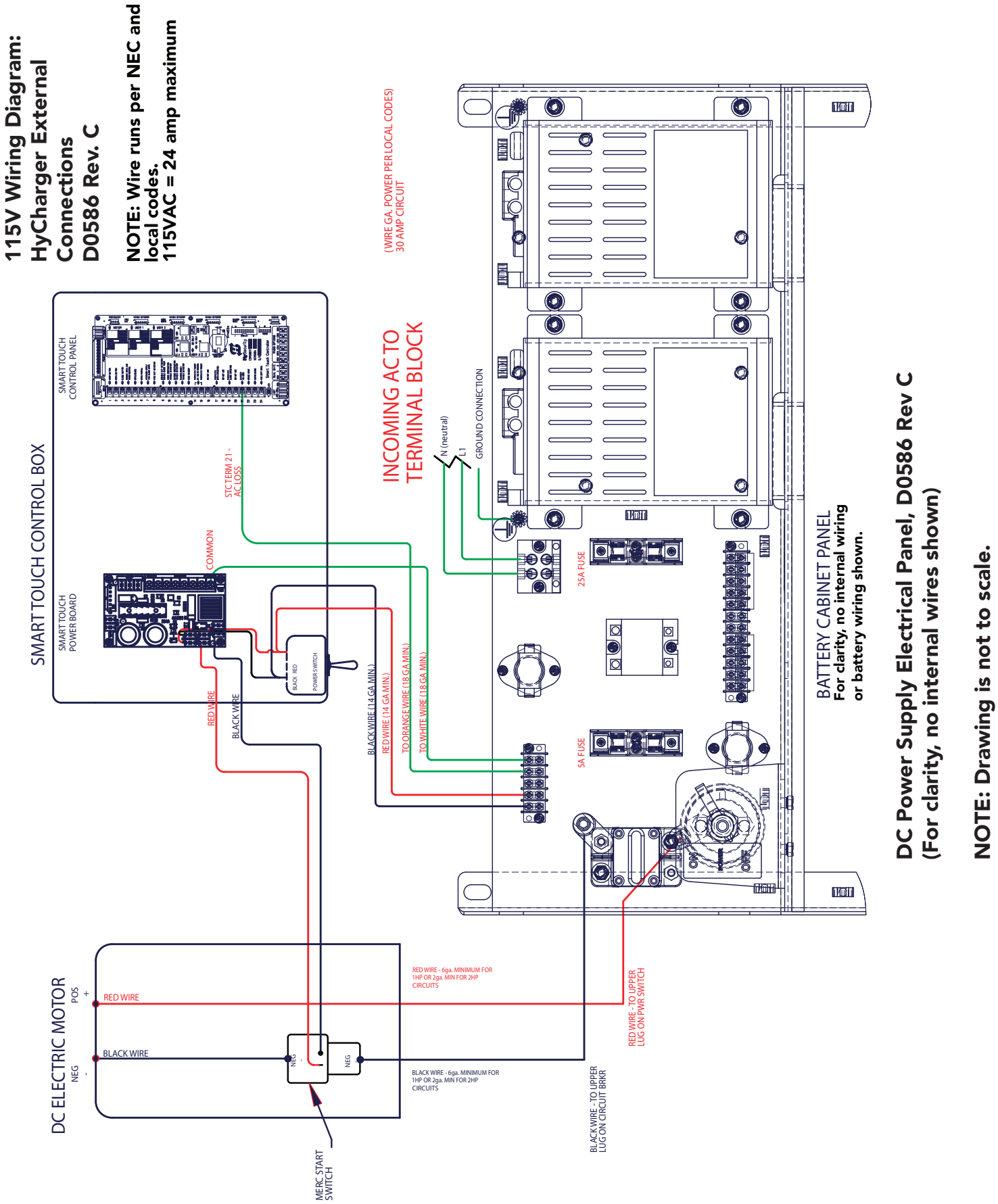

Wiring AC Power: 230V HyCharger DC

208/230V Wiring Diagram: HyCharger External Connections D0585 Rev. C

NOTE: Wire runs per NEC and local codes. 208/230VAC = 13 amp maximum

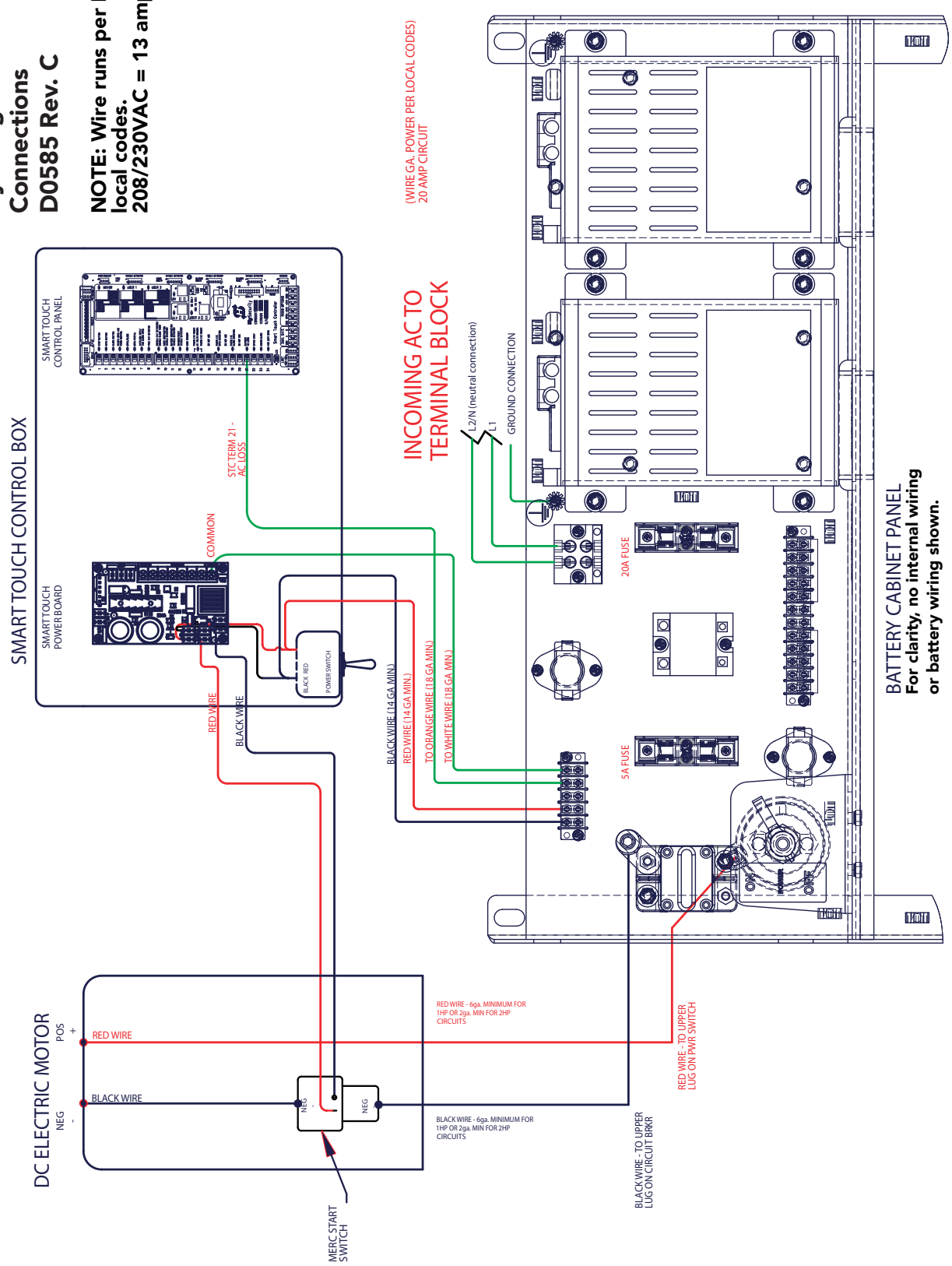

DC Power Supply Electrical Panel, D0585 Rev C (For clarity, no internal wires shown)

NOTE: Drawing is not to scale.

HyCharger DC Power

Connect AC power to the HyCharger DC per the wiring diagrams shown on the previous pages. Note the voltage, 115V or 230V, for your operator connection.

1. Read and follow instructions in "Site Considerations" on page 13.
2. For more specifications, refer to the back cover.

Gate Operator AC Power

Connect AC power to the gate operator per the information found in the gate operator's *Installation Instructions*.

CAUTION

Wiring of gate operators must conform to NFPA and NEC standards and comply with all local codes.
When the installation is compliant and complete, turn on AC power at the source and at the control box.

Turning the Power ON

The AC power disconnect switch is inside the DC Power Supply cabinet.

Another power switch is located on the operator's control box.

1. When AC power is connected correctly, turn both power switches ON.
2. When power is turned ON, check the green status light on the Smart Touch Controller. Make sure it is blinking. The green status light appears below the disc battery and indicates that the processor is receiving power.
3. Cycle test the gate operator.

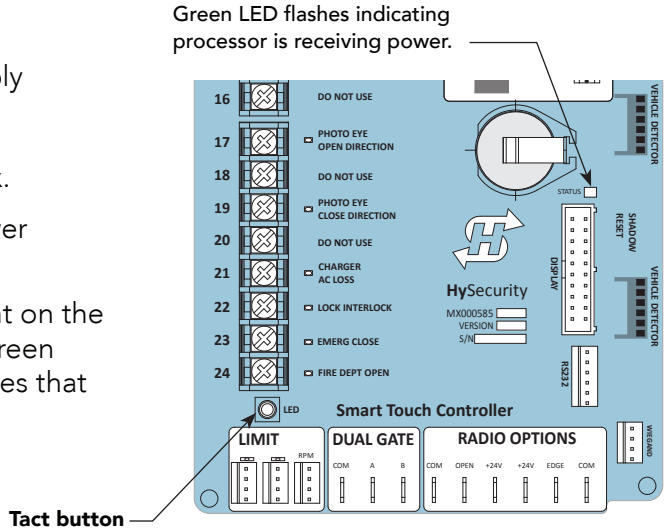

Test the Gate Operator

Complete the installation by testing the operation of the gate.

NOTE: If the DC Power Supply with HyCharger DC is connected to a HySecurity gate operator, it must be turned ON and in Run mode. A Run mode display appears on the STC. If a Run mode status does not appear on the display, press Reset. If an error, alert, or fault appears on the display, refer to the "Troubleshooting" section to learn how to clear the display and return to Run mode.

1. Press Open or Close to cycle the gate.
2. Check the display on the STC for any Alerts, Faults, or Errors.
3. Test the operator.
   - Cycle the gate a more few times by pressing the Close and Open buttons.

Display & Menu Options

Highly sophisticated software, on your gate operator, provides three different modes of operation: *run*, menu (*program*), and *fault*. How to navigate using the Smart Touch Controller (STC) keypad, interpret status display codes and program the operator is found in your gate operator's product manual. A few highlights, to get you started, are provided in this section along with information about the DC Power Supply with HyCharger DC display and control panel.

CAUTION

Keep your operator current with the most up-to-date software version.

Initial Setup

Once you have completed the installation, attached the wired accessories and turned the power ON, you're ready to program the operator. Two different approaches exist:

- Connect a laptop computer to the serial (RS-232) port, check for the most current software version and then set the operator menu configurations via the START software.

  NOTE: Use a laptop computer at your place of business to conveniently download the free START software and most current software version from www.hysecurity.com before heading out into the field. This makes it easy to adjust settings using a laptop.

- Manually navigate through the User and Installer Menus using the STC keypad. The instructions for performing this second option are provided in this section.

Gate Operator Display and Keypad

The STC display and keypad provide access to the operator's sophisticated software and functionality.

Three different operational modes exist:

- Run Mode - gate is operational, awaiting commands.
- Menu (Program) Mode - motor disengages and operational commands are ignored. Data entry, menu navigation, and menu selection can be accomplished via the keypad or through a START software connection using the RS-232 port.
- Fault Mode - alerts, faults, or errors appear on the display. Some errors or faults can be reset with the Reset button while more serious faults require additional troubleshooting. Faults indicate a need for diagnosis and resolution. Refer to "Troubleshooting" on page 25.

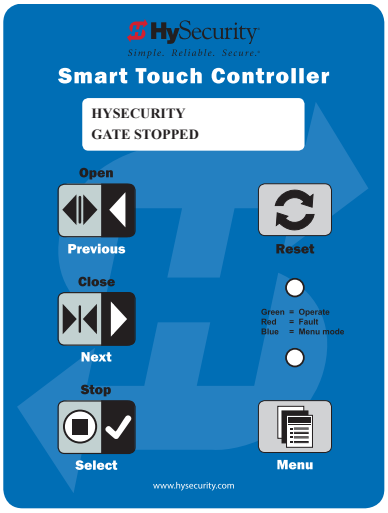

Gate Status Display in Run Mode

- The keypad lets you navigate, change, or clear the information in the display menus. The singular use of these keys is dependent on the operator mode.
- The buttons with text above and below have two functions. Use these buttons to enter operating commands or navigate through the User and Installer Menus.

Menu Mode and the STC Keypad

In Menu (Program) Mode, the motor disengages and operator commands are ignored. Data entry, menu navigation, and menu selection can be accomplished using the buttons on the Smart Touch Controller keypad.

NOTE: Menu Mode automatically returns to Run Mode if no activity (i.e. key presses) occurs for two minutes.

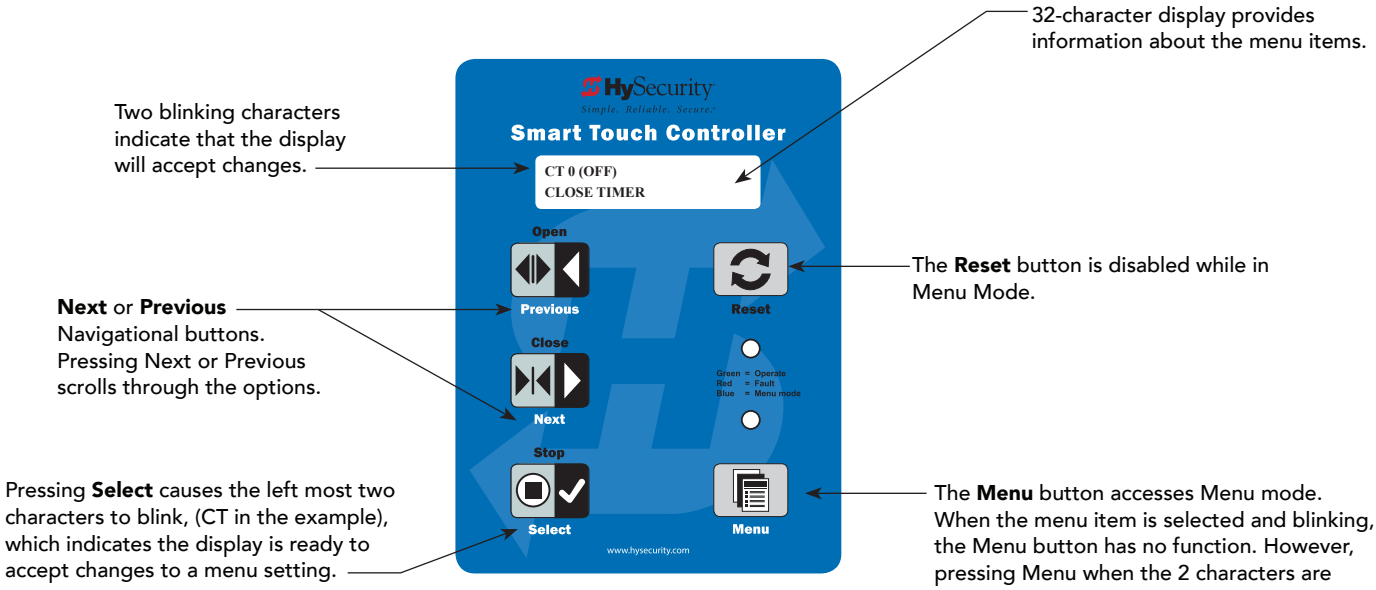

Use the navigational buttons to view selections. Press **Select** a second time to accept what appears on the display. Entry mode is exited, the two characters stop blinking, and Next or Previous must be pressed to move onto a different display. Pressing Menu exits to Run mode.

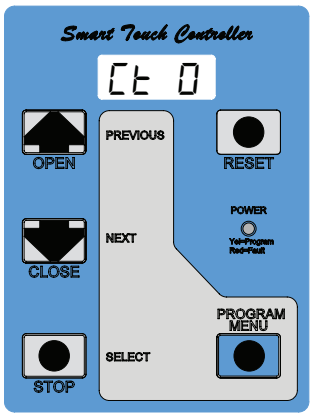

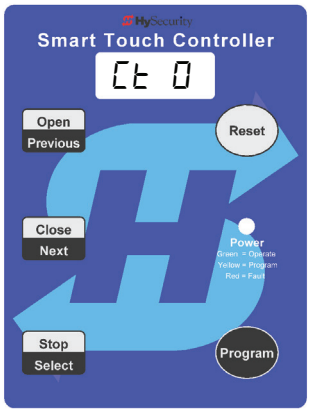

STC Keypads with 7 Segment Character Display

Menu Mode Navigation

Navigating within the program menus is easy once you learn how the keypad buttons function. Refer to the following chart.

Smart Touch Controller: Menu Mode Navigation Buttons

To change that data appearing in the display	To navigate through the Selections	To choose what appears on the display	To navigate between menu items
Press **Select**. Two left characters blink.	Press **Next** or **Previous**. Continue pressing Next to view all selections.	Press **Select**. Blinking characters become static.	Press **Next** or **Previous**. Advance - press Next Previous - press Previous

Run Mode and the STC Keypad

The Run Mode displays appear static when the operator is ready and waiting for a run command. When the display is flashing GATE OPENING or GATE CLOSING, a command has been received and the barrier gate is in motion. The command may come from a variety of sources: a card reader, push-button remote, or recognition of a vehicle passing over a loop detector. In all cases, the operator "runs" the motor when it receives an operational command.

Three displays indicate the position or status of the barrier gate. The keypad entry used to access the User or Installer menus, begins at one of these Run Mode displays.

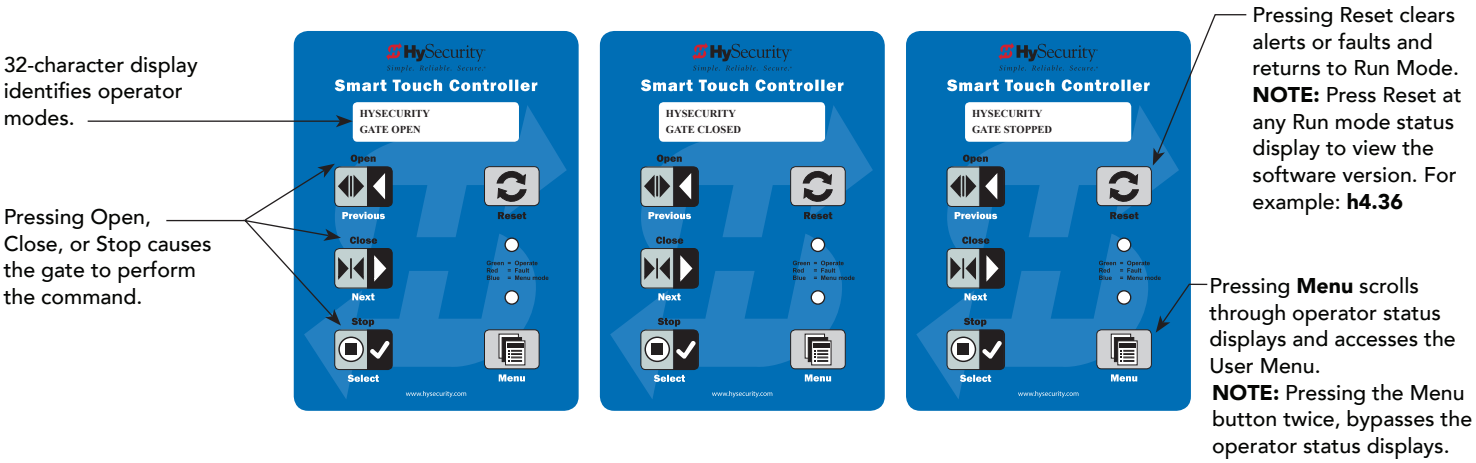

Run Mode Displays

NOTE: To access the User or Installer menus, the motor cannot be engaged and the gate cannot be moving.

Check Time and Date

An easy way to determine if your operator is set for the correct date and time zone can be accomplished by taking the following steps:

1. While in Run mode (gate status appears in the display), press and hold the STOP button.

   The date appears DD/MM, and then the time HH:MM.

2. If you need to change the time zone, refer to the Set Clock "CL" item in the User Menu.

Stop the STC Status Display Scroll

To stop the operator status display scroll and focus on one item, press Select. Press Select a second time, to resume the scrolling display. Status scrolling also occurs when you press the Menu button once.

Change the Contrast on the 7-Segment STC Display

While the gate operator status displays are scrolling, you can change the contrast (on the 7-segment display) by pressing the up or down arrow keys. The display's contrast changes accordingly. The operator status displays continue to scroll and stop at the User Menu entry item.

NOTE: Since sunlight does not affect readability on the OLED display, changing the display contrast is not available on gate operators shipped with the 16 character, 2 line display (32 character display).

AC Power Loss Function: User Menu

The AP setting configures how the gate functions when DC power fails. The DC Power Supply with HyCharger DC does not have a keypad so User Menu items can only be modified using the Smart Touch Controller keypad found in the gate operator or connecting a PC laptop computer and using S.T.A.R.T.

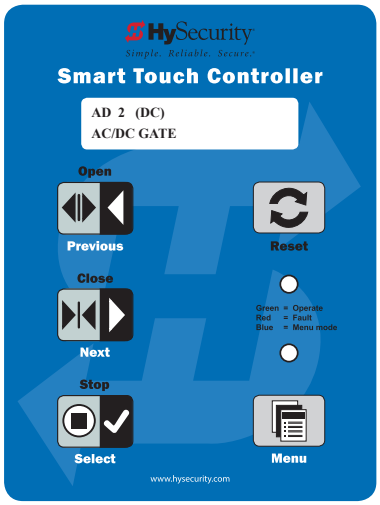

NOTE: To configure the DC Power Supply power loss function, the Installer Menu item AD (AC/DC Gate) must be set to 2. See page 24.

The User Menu item specific to DC Power Supply with HyCharger DC power loss is described below. For the full list of User Menu items, refer to your gate operator's *Programming & Operations Manual*.

Access:

Pressing the Menu button, at one of the STC static Run Mode displays, causes the operator status displays to scroll past, stop and display the first user menu item.

NOTE: To access the User Menu, the operator must be in Run Mode. To bypass the operator status displays, press the Menu button a second time.

Use the navigational buttons, Select, Next, and Previous to change or view the menu functions. Refer to the chart, *Smart Touch Controller: Menu Mode Navigation Buttons* on page 20.

Table 1 and Table 2 describe the User Menu item specific to AC Power Loss. (Factory default settings are shown in bold.)

User Menu, AP: Table 1, OLED and 7 Segment Displays

User Menu	7 Segment Display	Setting Options	Menu Tasks & Explanations	STC Wire Connections
AP 0 AC LOSS **UPS FAIL OPEN**	AP 0 AP 1 AP 2 AP 3	**0 = UPS FAIL OPEN** 1 = UPS FAIL CLOSE 2 = AUTO OPEN 3 = NO CLOSE TIMER	This menu item only appears if the operator is DC powered. The setting configures how the gate functions when AC power fails.	COM Input 21, Charger AC Loss UPS Terminal strip 24 VDC to control box power disconnect switch - and +

Refer to the next page for a description of the different AC Loss (AP) settings.

 © 2016 www.hysecurity.com

AP Menu, AC Loss: Table 2, Configuring DC Power

User Menu Setting	7 Segment Display	Menu Tasks & Explanations	STC Wire Connections
AP 0 AC LOSS **UPS FAIL OPEN**	AP 0	If the battery voltage drops below 20V, the gate operator opens and locks the gate until battery voltage recovers to 23.5V. The gate can be closed: • Manually • By pressing the Close button • By an Emergency Close input The gate may be re-opened by any open command until the battery voltage drops to 17V, at which time the gate is absolutely locked open, unless moved manually.	COM Input 21, Charger AC Loss UPS Terminal strip 24 VDC to control box power disconnect switch - and +
AP 1 AC LOSS UPS FAIL CLOSE	AP 1	If the battery voltage drops below 20V, the gate operator closes and locks the gate until battery voltage recovers to 23.5V. The gate can only be opened by pressing the Stop button and then (within 1 second) pressing the Open button. **NOTE:** The Fire Dept. open input overrides the previous statement. The gate may be re-closed by pressing the Close button or using the Emergency Close input. When the battery voltage drops to 17V, the gate completes its final cycle and remains in the fully open or fully closed position.	COM Input 21, Charger AC Loss UPS Terminal strip 24 VDC to control box power disconnect switch - and +
AP 2 AC LOSS AUTO OPEN	AP 2	Five seconds after AC power loss, the gate operator automatically locks open until AC power is restored. The gate can be closed: • Manually • By pressing the Close button • By an Emergency Close input The gate may be re-opened by any open command until the battery voltage drops to 17V, at which time the gate is absolutely locked open, unless moved manually.	COM Input 21, Charger AC Loss UPS Terminal strip 24 VDC to control box power disconnect switch - and +
AP 3 AC LOSS NO CLOSE TIMER	AP 3	After AC power loss, the gate operator remains quiesence until it receives an open command, and then automatically locks open until AC power is restored. The gate can be closed: • Manually • By pressing the Close button • By an Emergency Close input If the battery voltage drops to 17V, the gate remains locked open, unless moved manually.	COM Input 21, Charger AC Loss UPS Terminal strip 24 VDC to control box power disconnect switch - and +

Installer Menu

The Installer Menu options provide more advanced configurations for the gate operators. Access to the Installer Menu is through the User Menu. The navigational buttons are the same in both menu modes.

Access:

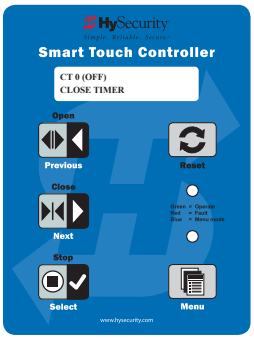

While a static gate status is being displayed, press the Menu button twice. (Bypasses the operator status displays.)

When the Close Timer display appears (Hold to Close, if the Close Timer display is hidden):

1. **Access the Installer Menu** by simultaneously pressing and holding the Reset and Open buttons.
2. Release both buttons and the display changes, indicating you have arrived at the first item in the Installer Menu.

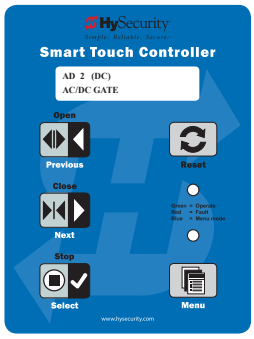

NOTE: Installer Menu options can also be configured through the use of a laptop computer and S.T.A.R.T. software. See *Smart Touch Analyze and Retrieve Tool* information found on the Hysecurity website: www.hysecurity.com

Table 3 shows the Installer Menu item that is configured for the DC Power Supply with HyCharger DC. (Factory settings shown in bold.) The menu item is set at the factory, but if the STC is replaced, you will need to reset AD to AD 2.

Installer Menu: Table 3, OLED and 7 Segment Displays

Installer Menu	7 Segment Display	Setting Options	Menu Tasks & Explanations	STC Wire Connections
AD 0 AC/DC GATE	AP 0 AP 1 AP 2 AP 3	**0 = gate disabled** 1 = AC (alternating current) 2 = DC battery-power (OT 1-4, 7-9) 3 = HyInverter-Power Supply (OT 1-4, 7-9)	Select the type of power that the operator uses and is appropriately wired. **NOTE:** This menu item only appears when the OT (operator type) is set.	N/A

CAUTION

Keep your operator up-to-date with the latest software version for your site. Upload current software versions to your PC laptop from www.hysecurity.com and use S.T.A.R.T. to download it to the Smart Touch Controller in your gate operator.

 © 2016 www.hysecurity.com

Troubleshooting

The Smart Touch Controller reports system malfunctions using three simultaneously occurring methods:

- Codes presented on its display (alert, fault or error)
- Activation of a buzzer which emits a series of chirps at defined intervals
- Stop gate travel

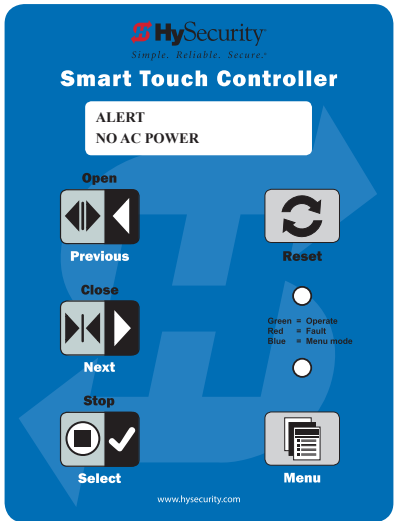

A short list of codes appears in this section and provides troubleshooting solutions for DC-powered gates. For a complete list of troubleshooting codes, refer to the Troubleshooting Codes table in your gate operator's *Programming and Operations* manual.

To help in diagnosing a controller board problem, the active status of each input on the Smart Touch Controller is indicated by its associated LED.

- On AC- powered gate Operators: Active-input LEDs are always illuminated.
- On DC- powered gate Operators (with AC input OFF): Press and hold the Tact button to illuminate the active-input LEDs.

NOTE: A qualified technician may troubleshoot the operator with the aid of the information and procedures that follow. If it is necessary to call a distributor for assistance, be sure to have the model and serial numbers available. Other helpful information is the job name, approximate installation date, and service records of any recently-performed maintenance work.

System Diagnostic Messages

Code	Priority	How to clear
ALERT	Low	Enter new command such as Open or Close.
FAULT	Medium	Press the Stop or Reset button
ERROR	High Serious issue that may require Technical Support.	Errors can only be cleared by pushing the Reset button or cycling power.

NOTE: The green LED near the coin-sized battery on the Smart Touch Controller is the "heartbeat" of the processor. This LED flashes continuously and at a constant rate when the system is operating normally. When a fault, error, or alert occurs, it turns red.

The Smart Touch Controller maintains self-diagnostics. Specific codes appear on the display and the Audio Alert buzzer emits distinctive chirping sounds. Any Alert, Fault, or Error is logged into memory and stamped with the date and time. These diagnostic messages can be retrieved for analysis purposes via optional S.T.A.R.T. software and a PC laptop.

NOTE: S.T.A.R.T. configuration and diagnostic software is available at no charge from www.hysecurity.com.

Troubleshooting Codes: Table 6

Type	Alert/Fault/Error Display	Buzzer Chirp Sequence	Possible Cause & Suggested Corrective Action
ALERT	NO AC POWER nOAC	Chirps once whenever the gate reaches the close limit	AC power is shut off at the source (breaker) or is not connected. The circuit breaker on the transformer has tripped. • Have a licensed electrician check the wiring. • Connect AC power to the operator. • Reset circuit breaker at the electrical panel. • Reset the operator circuit breaker. • Turn AC power switch on.
ALERT	LOW 24VDC LO24	No chirps; LCD flashes for 1s every 5s	Occurs when the battery voltage has dropped to less than 22 Volts. At this level, the batteries are 80% depleted. **NOTE:** Functionality of the controller board becomes impaired when the voltage drops below 21 Volts. 1. Check that AC power is available. Check all wiring connections. Clean or repair as required. 2. Check the following and replace, if necessary: • Battery condition • Charger failure. Check charger voltage • STC • Transformer
ALERT	HYSECURITY BAD POWER bAdP	No chirps: LCD steady and controls disabled	Critically low 24V supply power. DC Buss power is below 14V – no control functions will be allowed. This message can occur only on initial start up, if power is critically low.
ALERT	DEAD BATTERY dEAd bAtt	3 chirps upon any operating command entry	Appears when the 24VDC power drops too low, disabling the operator to prevent damage to the batteries from excessive discharge. Verify the AC power is present at the charger, the charger is on and charging. The charger should shut off when the batteries charge to 29VDC. If the batteries will not "hold a charge" replace them.
ALERT	ALERT 17 BAD COIN BATTERY AL 17	3 chirps at initial power up	The small coin battery on the STC is loose or needs replacing. 1. Verify that the battery is properly seated. 2. Replace coin battery. 3. Restore power. 4. Press RESET button.
ERROR	ERROR 7 MENU CHECKSUM Err7	3 chirps per second once per minute	Contact HySecurity.
FAIL	FAIL PROGRAM DATA ERR FAIL	3 chirps per second once per minute	1. Try turning off the power to the operator and having the customer re-seat all of the various connectors and cables. 2. Upload the latest software release. If the fail does not go away, replace the STC board.

Mechanical Issues and Hydraulic Issues

Refer to your gate operator's *Programming and Operations* manual for general problems concerning gate movement or hydraulic issues.

General Maintenance

Refer to your gate operator's product manuals for problems concerning gate movement and software or hydraulic issues.

Battery Maintenance

Two 12V, 110Ah AGM batteries store the energy produced by the DC Power Supply with HyCharger DC during an AC power loss. Though the batteries should hold a charge for years, time and environment can take its toll. Optimum temperature for battery life is 70° F (21° C). Review "Battery Safety and Longevity" on page 12.
If you are consistently receiving an alert on the gate operator's STC display that the batteries are low or dead, it's time to replace them.

WARNING

Prevent Electrical Shock! Do NOT touch both poles of the battery at the same time otherwise serious injury and shock or burns will occur. Be sure to remove any metal (rings, jewelry, tools, etc.) and any conductive products from your person before servicing or working near the DC Power Supply with HyCharger DC.

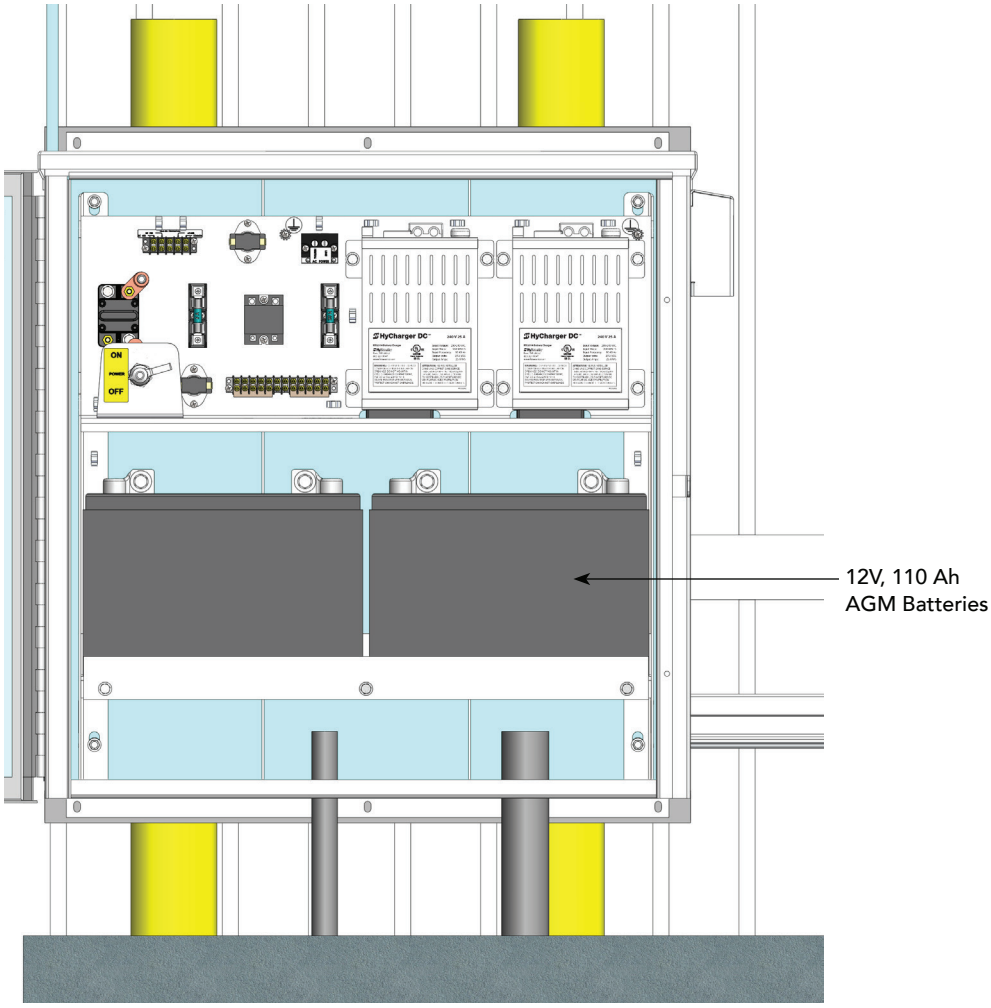

Replacing the Batteries

To access the batteries, you will need to remove the lip of the shelf and disconnect the battery wires. For ease of wiring, the batteries are positioned with the front label facing the rear panel.

Review "IMPORTANT SAFETY INFORMATION" on page 3 and "Hazardous Materials and Proper Disposal" on page 4, before proceeding with the steps below.

DANGER

Turn OFF AC power at the source (circuit breaker panel) before replacing batteries in the DC Power Supply with HyCharger DC. Follow facility Lock Out/Tag Out procedures. Make sure all power switches are in the OFF position. Follow all electrical code standards and regulations.

CAUTION

Allow 5 minutes for the system to self-discharge. Remove all metal from your person (rings, necklaces, etc.)

To replace the batteries, take the following steps:

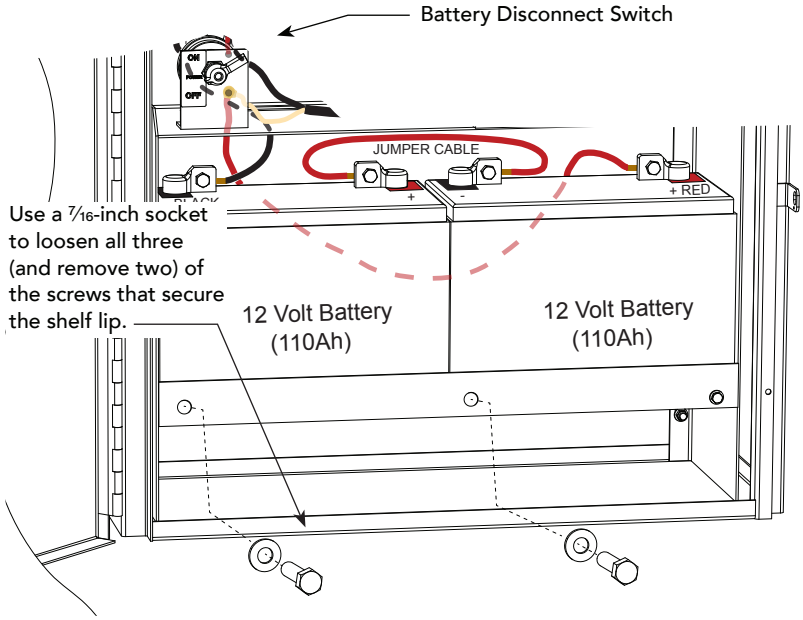

1. Turn OFF AC and DC power. Read DANGER and CAUTION messages above.
2. Open the cabinet and turn OFF the battery disconnect switch.
3. Use a 7⁄16-inch box end or socket wrench to remove the bolts that hold the shelf lip in place.
4. Use a 9⁄16-inch and crescent wrench to remove the center jumpers.
5. Remove the positive (red) wires from battery terminals.
6. Remove the negative (black) wires from the battery terminals.
7. Replace the spent batteries with two new 12V, 110Ah AGM batteries. Use only AGM batteries as replacements. Make sure the front label faces the rear panel.
8. Reverse the step process to rewire the new AGM batteries. With the batteries on the shelf:
   - Reconnect the negative (black) wires.
   - Reconnect the positive (red) wires.
   - Connect the red main battery power disconnect switch (breaker) wire per the wiring diagram.
   - Reconnect the center jumper wires.
9. Replace the shelf lip when all the batteries are connected and positioned properly.
10. Turn ON power at the main circuit breaker.
11. Turn ON the Battery Disconnect Switch and turn ON the gate operator's power switch.
12. Test the operator. See "Test the Gate Operator" on page 18.

WARRANTY

1. Warranty.

Hy-Security Gate, Inc. ("HySecurity") warrants that at the time of sale each of its products will, in all material respects, conform to its then applicable specification and will be free from defects in material and manufacture.

The following additional durational warranties apply to HySecurity products, depending on whether (1) the product is purchased through an authorized HySecurity distributor and (2) whether a timely and complete product registration is submitted to HySecurity.

It is therefore important that you register your product with HySecurity, (online www.hysecurity.com), within the 60-day period described below.

1(a) HySecurity Products Purchased Through Authorized Distributors and Properly Registered

For any gate operator product that is purchased from an authorized HySecurity distributor (this excludes product purchased through internet resellers or any distributor not authorized by HySecurity), if the product registration is completed by the Dealer/Installer/End User within 60 days of the date of purchase, the following warranty terms will apply. HySecurity warrants that the product will remain serviceable for the following periods:

a. Hydraulic Industrial Gate Operators: Five Years or 500,000 gate cycles (whichever occurs first) after the date of installation,
b. Electromechanical Slide and Swing operators: Five Years after the date of installation—unless installed in a single family residential application, in which case the warranty term shall be Seven Years after the date the product is shipped from HySecurity,
c. Electromechanical Barrier Arm Operators: Two Years or 1,000,000 gate cycles (whichever occurs first) after the date of installation,
d. Hydraulic Wedge Operators and Electromechanical Surface Mount Wedge Operator: Two Years or 500,000 gate cycles (whichever occurs first) after the date of installation;

provided that the preceding 5-year warranty period in (a) and (b) will not extend beyond seven years from the date that the product was shipped from HySecurity, and the 2-year warranty period in (c) and (d) will not extend beyond four years from the date that the product was shipped from HySecurity.

The preceding warranty durations do not apply to the products or components described below (e-h), which have a shorter warranty period.

e. Hydraulic Gate Operator Drive Wheels including XtremeDrive™ wheels and rack: Two Years from date of installation.
f. AC and DC power supplies, chargers and inverters and HyNet module: Two years from date of installation, except batteries.
g. Batteries: One Year from date of shipment from HySecurity.
h. Components subject to normal wear including, but not limited to, chains, belts, idler wheels, sprockets and fuses: One Year from date of installation.

1(b) HySecurity Products Not Purchased Through an Authorized Distributor or Not Properly Registered within 60 Days

For any product that is not purchased from an authorized HySecurity distributor or for which the product registration was not completed by the Dealer/Installer/End User within 60 days of the date of purchase, the following One-Year Limited Warranty will apply: HySecurity warrants that the product will remain serviceable for the following periods, which begin on the date that the product was shipped from HySecurity:

a. All Gate Operators: One Year or 100,000 gate cycles whichever comes first.
b. AC and DC power supplies, chargers or inverters: One Year.
c. HyNet module: One Year.
d. Hydraulic Gate Operator Drive Wheels: One Year.

1(c) Replacement Parts

HySecurity warrants that replacement parts (whether new or reconditioned) will remain serviceable for One Year from the date that the product was shipped from HySecurity or the remaining period of the Gate Operator warranty, whichever is longer.

1(d) Limitations and Exclusions Applicable to Each of the Preceding Warranties.

The preceding warranties shall not apply to equipment that has been (1) installed, maintained, or used improperly or contrary to instructions; (2) subjected to negligence, accident, vandalism, or damaged by severe weather, wind, flood, fire, terrorism or war; or (3) damaged through improper operation, maintenance, storage or abnormal or extraordinary use or abuse. Any modification made to products will void the warranty unless the modifications are approved in writing by HySecurity in advance of the change (this exclusion does not apply to normal installation of approved accessories and/or protective devices or sensors). It is the responsibility of the distributor, installer, or End User to ensure that the software version in the product is maintained to the latest revision level.

The preceding warranties do not extend to accessories when those items carry another manufacturer's name plate and they are not a part of the base model. HySecurity disclaims all warranties for such accessory components, which carry only the original warranty, if any, of their original manufacturer. HySecurity hereby assigns its rights under such manufacturer warranties—to the extent that such rights are assignable—to Buyer.

These warranties extend to HySecurity's Distributors, to the Dealer/Installer, and to the first End User of the product following installation. They do not extend to subsequent purchasers.

2. Exclusion of Other Warranties.

The warranties contained in Section 1 are the exclusive warranties given by HySecurity and supersede any prior, contrary or additional representations, whether oral or written. Any prior or extrinsic representations or agreements are discharged or nullified. HYSECURITY HEREBY DISCLAIMS AND EXCLUDES ALL OTHER WARRANTIES—WHETHER EXPRESS, IMPLIED, OR STATUTORY—INCLUDING ANY **WARRANTY OF MERCHANTABILITY**, ANY **WARRANTY OF FITNESS FOR A PARTICULAR PURPOSE**, ANY LIABILITY, FOR INFRINGEMENT, AND ANY IMPLIED WARRANTIES OTHERWISE ARISING FROM COURSE OF DEALING, COURSE OF PERFORMANCE, OR USAGE OF TRADE.

3. Buyer's Exclusive Remedies for Any Nonconformity.

If a HySecurity product fails to conform to the warranties in Section 1, Buyer must notify and order replacement parts from the Distributor through which the product was purchased within a reasonable time and in no event more than thirty (30) days after the discovery of the nonconformity. HySecurity will investigate and, in the event of a breach, will provide, within a reasonable period of time, one of the following: (1) repair or replacement of any nonconforming products or components or (2) refund of the price upon return of the nonconforming items. HySecurity reserves the right to supply used or reconditioned material for all warranty claims. HySecurity will not be considered to be in breach of or default under this Warranty because of any failure to perform due to conditions beyond its reasonable control, including any force majeure. This warranty does not cover any incidental expenses, including fines or penalties, temporary security, labor, shipping, travel time or standby time that are incurred for inspection or replacement of any nonconforming items. As a condition of warranty coverage, warranty claims must be submitted in accordance with the procedures described on the HySecurity form, "RMA Procedures."

THE REMEDY SELECTED BY HYSECURITY IN ACCORDANCE WITH THIS PARAGRAPH SHALL BE **THE EXCLUSIVE AND SOLE REMEDY OF BUYER FOR ANY BREACH OF WARRANTY.**

4. Exclusion of Consequential and Incidental Damages.

HYSECURITY SHALL NOT BE LIABLE FOR ANY INCIDENTAL, SPECIAL, OR CONSEQUENTIAL DAMAGES, WHETHER RESULTING FROM NONDELIVERY OR FROM THE USE, MISUSE, OR INABILITY TO USE THE PRODUCT OR FROM DEFECTS IN THE PRODUCT OR FROM HYSECURITY'S OWN NEGLIGENCE.

This exclusion applies regardless of whether such damages are sought for breach of warranty, breach of contract, negligence, or strict liability. This exclusion does not apply to claims for bodily injury or death.

5. Severability.

If any provision of this warranty is found to be invalid or unenforceable, then the remainder shall have full force and effect.

6. Proprietary Rights.

HySecurity retains and reserves all right, title, and interest in the intellectual property rights of its products, including any accompanying proprietary software. No ownership of any intellectual property rights in the products or accompanying software is transferred to Distributor, Dealer/Installer or End User.

7. Applicable Law.

This warranty will be interpreted, construed, and enforced in all respects in accordance with the laws of the State of Washington, without reference to its choice of law principles. The U.N. Convention on Contracts for the International Sale of Goods will not apply to this warranty.

Warranty D0317 revised June 5, 2015

Specifications

Models	HyCharger DC 115V and HyCharger DC 230V			
Compatible Operators	**SlideDriver 15 UPS, 30F UPS, 40 UPS, 80 UPS*, 200 UPS***	**StrongArm 14F UPS, 20 UPS, 28 UPS, 36 UPS***	**SwingRiser (All UPS models)**	**HydraLift (All UPS models)**
Input Power	115VAC*, 208/230VAC, 50/60Hz, 20A breaker			
Output Power	24V, 50A			
Burst Mode	Burst of Power, when needed			
Batteries	Two AGM 110Ah, 12VDC batteries for extended cycles (5200 W)			
Typical Efficiency	> 80%			
Thermal Protection	Yes			
Charger	Smart charge system conditions batteries			
Duty Cycle	Continuous			
Recharge	Fast; Minimum 2 hour recharge, 12 hours for high cycle applications			
Temperature Rating	-40° to 158° F (-40° to 70° C)			
Humidity	5% to 95% relative humidity, non-condensing			
User Controls	Programmable with Smart Touch Controller or S.T.A.R.T.			
Regulatory Listing	ETL Listed, Enclosure NEMA 3			
Retrofit	Existing installation sites that require UPS. Same fit and finish as existing AC-powered operator. Installs anywhere on the branch circuit* from panel to protected device. *115VAC requires 30A branch circuit.			
Warranty	Batteries: 1 year			
Est. Shipping Weight	Approximately 325 pounds / 147 kg includes batteries.			

Copyright Notice

© Copyright 2016 by HySecurity Gate, Inc.

All rights reserved. No part of this manual may be reproduced by any means (photocopier, electronic, or mechanical), without the express written permission of HySecurity Gate, Inc. Federal copyright law prohibits the reproduction, distribution, or public display of copyrighted materials without the express written permission of the copyright owner, unless fair use or other exemption under copyright law applies. Additionally, HySecurity Gate, Inc. makes no representations or warranty with respect to this manual. We also reserve the right to make changes in the products described without notice and without any obligation to notify any persons of any such revision or change.

Trademarks

SlideDriver, StrongArm, SwingRiser, StrongArm CRASH, StongArm M30, StrongArm M50, HydraLift, HydraSwing, HydraWedge SM50, HydraSupply XL, HydraSupply, HyNet, Hy8Rely, HyInverter AC, HyCharger DC, SlideWinder, Smart Touch, S.T.A.R.T., SwingSmart DC, SlideSmart DC, StrongArmPark DC, WedgeSmart DC, Smart DC and the HySecurity logo are trademarks or registered trademarks of HySecurity Gate, Inc.

UL and UL logo are trademarks of UL LLC and ETL is a trademark of Intertek. Intertek provides the ETL Listed Mark