Installation/Owner's Manual

Series 9200

Heavy-Duty Vehicular Slide Gate Operator

9210-065-N-3-15

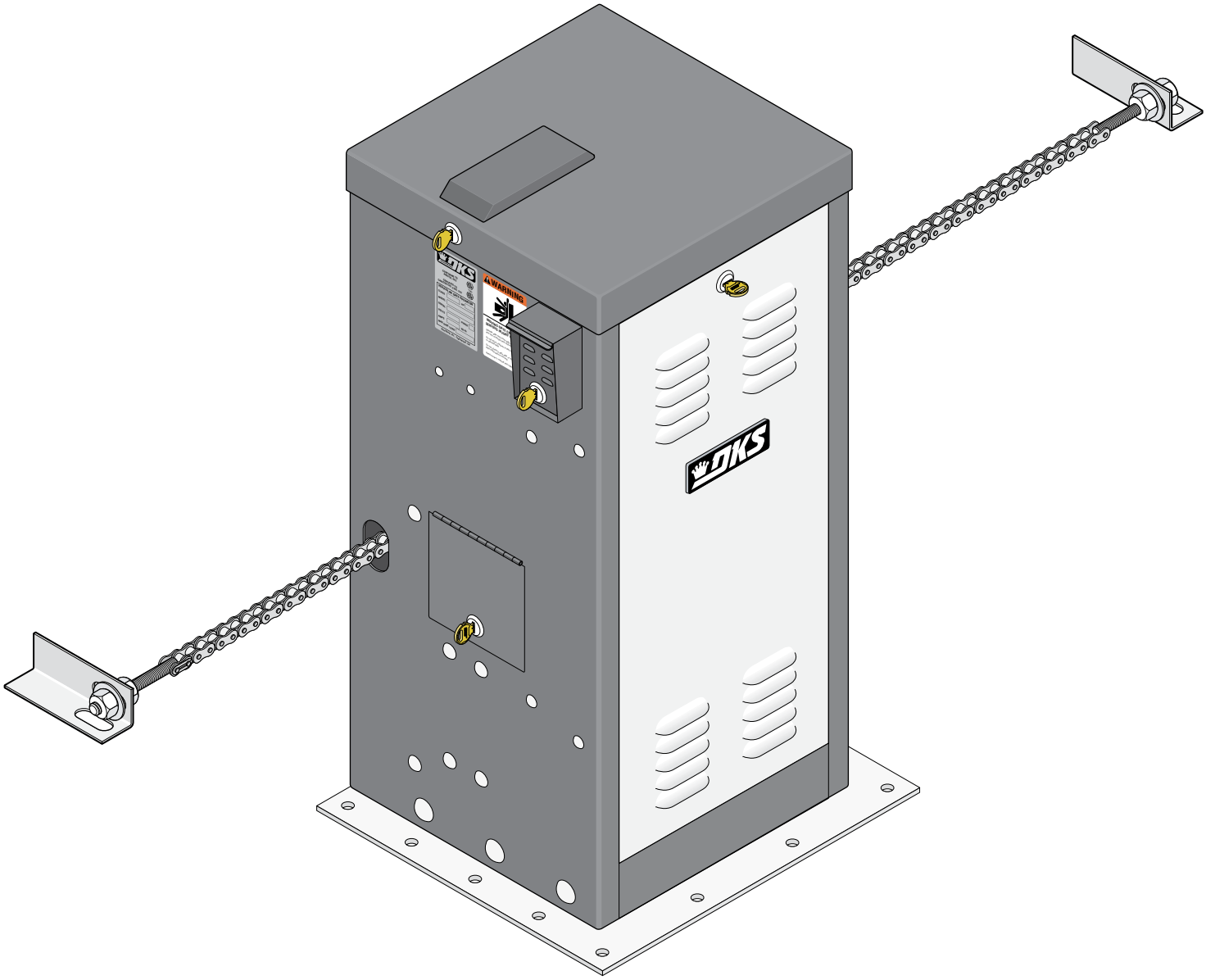

Date Installed: _____

Installer/Company Name: _____

_____

Phone Number: _____

Circuit Board
Serial Number
and Revision Letter: _____

Leave Manual with Owner

Copyright 2015 DoorKing, Inc. All rights reserved.

Intertek

UL 325 Compliant

DOORKING®

QUICK GUIDE: DIP-Switches

See page 21 for more information about DIP-switches.

The two DIP-switches located on the circuit board are used to program the operator to operate in various modes and to turn on or off various operating features. Whenever a switch setting is changed, power to the operator must be turned OFF and then turned back on for the new setting to take affect. Check and review ALL switch settings prior to applying power to the operator.

Left 4 Switches - SW 2
SW 2 is Upside-Down on Circuit Board.

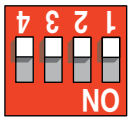

Typical Settings

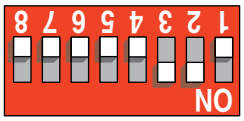

SW 1 - Right 8 Switches
SW 1 is Upside-Down on Circuit Board.

SW 1 - Right 8 Switches

Switch	Function	Setting	Description
1	Changes the direction the operator will open/close the gate.		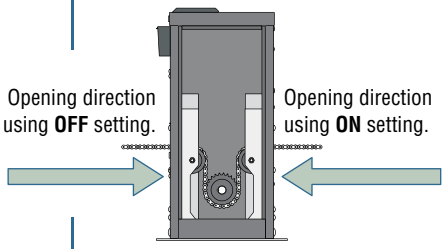 Factory Set Configuration 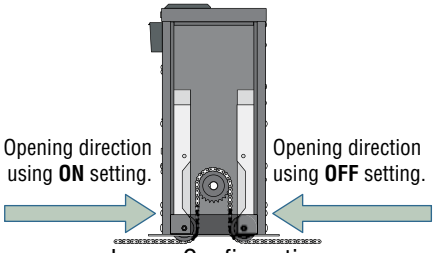 Lower Configuration
2	Auto-Close Timer	OFF	Auto-close timer is OFF. Manual input required to close gate.
		ON	Auto-close timer is ON. Adjustable from 1-23 seconds to close gate.
3	Exit Loop Port Output	Jumper Wire Needed OFF	The output wired to terminal #4 becomes the output from the loop detector installed in the **EXIT** loop port. Plug-in loop detector required for "OFF" function.
	Full Open Input	ON	**Normal Setting.** Terminal #4 is a normal full open input for a single gate operator.
4 and 5	Relay Activation and LED Indicator Light Activation	4-OFF 5-OFF	Relay activates and LED is ON when the gate is fully open.
		4-OFF 5-ON	Relay activates and LED is ON when the gate is not closed.
		4-ON 5-OFF	Relay activates and LED is ON when the gate is opening and open.
		4-ON 5-ON	Relay activates and LED is ON when the gate is opening and closing.
6	Warn Before Operate	OFF	**Normal Setting.** No sound.
		ON	Internal alarm will sound before gate starts and throughout gate's cycle.
7	Reverses Gate	OFF	**Normal Setting.** Input to terminal #6 and/or reverse loops will REVERSE gate during CLOSE cycle.
	Stops Gate	ON	Input to terminal #6 and/or reverse loops will STOP gate during CLOSE cycle.
8	Quick-Close Timer Override	OFF	**Normal Setting.** Timer will function normally.
		ON	Opening gate will stop and begin to close as soon as all reversing inputs (Reverse loops, photo sensors) are cleared regardless of the distance the gate has opened.

SW 2 - Left 4 Switches

Switch	Function	Setting	Description
1	Self-Test	OFF	**Normal Setting.** Normal gate operation.
		ON	Self-test mode. Operator **MUST** be disconnected from gate to run self-test.
2	Gate Opens Uphill	OFF	**Normal Setting.** Normal gate operation.
		ON	**MUST** be ON if gate opens UPHILL.
3	Gate Opens Downhill	OFF	**Normal Setting.** Normal gate operation.
		ON	**MUST** be ON if gate opens DOWNHILL.
4	Spare	OFF	Leave in the OFF position.

See page 25 for terminal wiring.

QUICK GUIDE: Terminal Descriptions

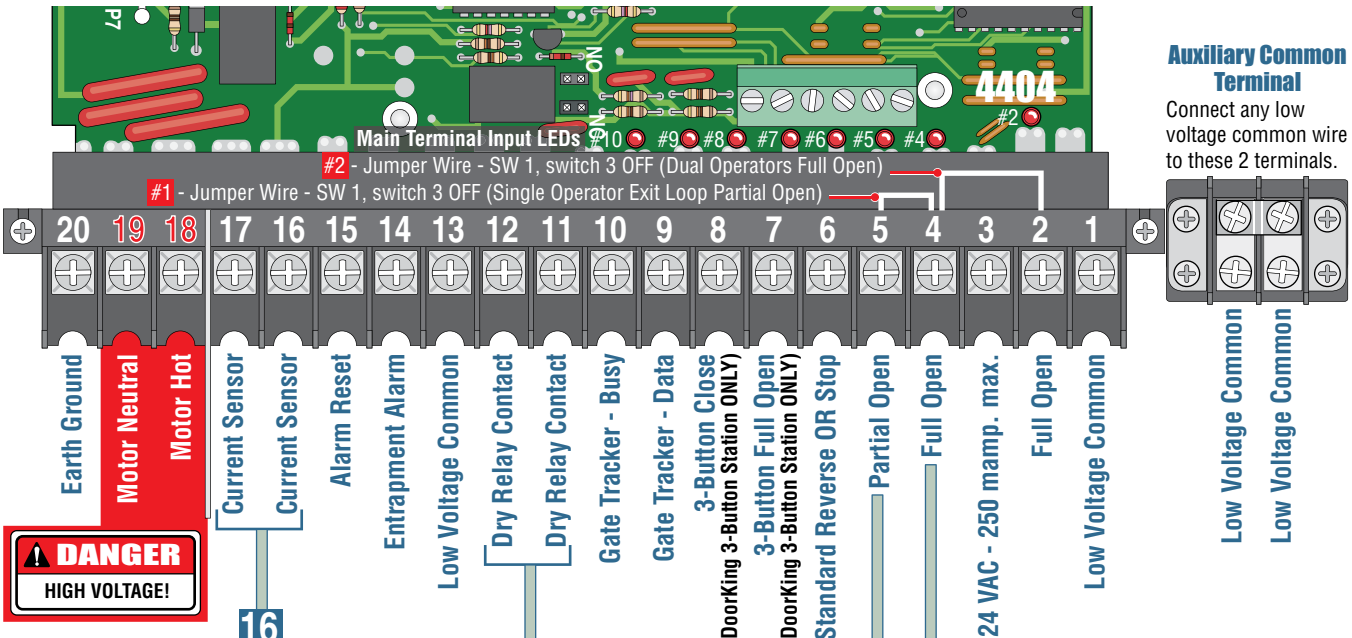

Auxiliary Common Terminal

Connect any low voltage common wire to these 2 terminals.

16
17

Used in conjunction with the circuit board inherent reversing sensors. See page 23 for further information.

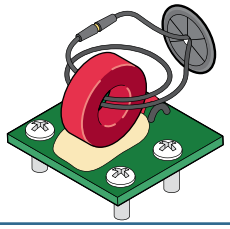

Main Terminal Input LEDs Note: The LED that is above the main terminal wiring input will light when that terminal input gets activated.

4

- SW 1, switch 3 is **ON**, terminal #4 functions as a normal **FULL** open input. (Normal Setting). **Single operator use ONLY**.
- SW 1, switch 3 is **OFF**, input to terminal #4 becomes the output from a plug-in loop detector installed in the **EXIT loop port** of the circuit board. A jumper wire is needed to open and close the gate(s) for these applications:

SW 1 is Upside-Down on Board

#1 Terminal #4 jumpered to terminal #5 will **PARTIALLY** open an automatic exit loop using a **single channel** plug-in loop detector installed in the exit loop port when using a single gate operator.

#2 Terminal #4 jumpered to terminal #2 will **FULLY** open bi-parting gates using a **dual channel** plug-in loop detector installed in the exit loop port when using dual gate operators.

5

For long gate applications. An input device connected to terminal #5 will open the gate to the partial open setting, See page 22 for more information.

11
12

Operation of relay is dependent on setting of SW 1, switches 4 and 5. See page 20 and 21 for DIP-switch function descriptions.

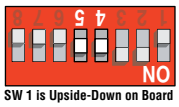

SW 1 is Upside-Down on Board

Relay contacts can be set for Normally Open (NO) or Normally Closed (NC) operation.
Contact rating is 1 amp maximum at 24-volts DC.

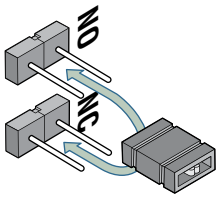

6

This input ONLY fuctions when gate is **fully opened** or in the **closing cycle**.

- When gate is closing: SW 1, **switch 7** is **OFF,** an input to terminal #6 (eg: photo beam gets obstructed) will **reverse** and open the gate.

Note: If the auto-close timer is **ON**, when gate reaches the open position, timer will time out and close the gate.

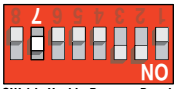

SW 1 is Upside-Down on Board

- When gate is closing: SW 1, **switch 7** is **ON,** an input to terminal #6 (eg: photo beam gets obstructed) will **stop** the gate, then continue to close the gate when input is clear (Used to help prevent tailgating vehicles from unauthorized enrty). See page 21 for more information.

TABLE OF CONTENTS

SPECIFICATIONS 3

Slide Gate Requirements 4

Safety Information for Slide Gate Operators 5

Gate Construction 6

Important Safety Instructions 6

Instructions regarding intended installation: 6

Important Notices 7

UL325 Entrapment Protection 8

Glossary 9

SECTION 1 - INSTALLATION 10

1.1 Gate Hardware 10

1.2 Underground Conduit Requirements 10

1.3 Installation Options, Gate Types 11-12

1.4 Installation #1 13

1.5 Installation #2, Chain Tray Kit 14-15

1.6 Chain Installation 16

1.7 Installation of Warning Signs 17

SECTION 2 - AC POWER TO OPERATOR(S) 17

2.1 High Voltage Wire Runs 17

2.2 High Voltage Terminal Connection 18

SECTION 3 - ADJUSTMENTS 19

3.1 Circuit Board Description and Adjustments 19

3.2 DIP-Switch SW 1 and SW 2 Settings 20-21

3.3 Limit Switches 22

TABLE OF CONTENTS

3.4 Inherent Reverse Sensor Adjustment 23

3.5 Current Sensor Adjustment 23

3.6 AC Module Adjustment 24

SECTION 4 - ENTRAPMENT AND SAFETY PROTECTION 25

4.1 UL 325 Terminal Description 25

4.2 Secondary Entrapment Protection Device Locations 26-27

4.3 Loop Detector Wiring 28

SECTION 5 - MAIN TERMINAL WIRING 29

5.1 Main Terminal Description 29

5.2 Control Wiring for Single/Primary Operator 30

5.3 Auxiliary Device Wiring 31

5.4 Bi-Parting Gates Wiring - Dual Gate Operators 32

SECTION 6 - OPERATING INSTRUCTIONS 33

6.1 AC Power and Reset Button(s) 33

6.2 Shutdown Conditions 34

Soft Shutdown

Hard Shutdown

6.3 Manual Gate Operation 35

SECTION 7 - MAINTENANCE AND TROUBLESHOOTING 36

7.1 Maintenance 36

7.2 Built-In Diagnostic Tests 37

7.3 Troubleshooting 37-38

7.4 Accessory Items 39

9200 Wiring Schematics 40-49

SPECIFICATIONS

Model #	Motor Power	Volt / Phase	Amps	Chain #	Max Gate Weight - lbs.	Gear Reducer	Slow Down	Gate Speed	AC Module Speed Control	Mechanical Speed Brake	Electronic AC Tech Brake	Pedestal Stand Kit
9210	1HP	115 / 1	9.7	50	2000	40:1	No	1 ft/sec Fixed Solid State Relays	No	No	No	Not Included
		208 / 1	5.0									
		230 / 1	4.9									
		208 / **3**	3.4	60	3000							
		230 / **3**	3.3									
		460 / **3**	1.7									
9220	2HP	208 / 1	11.7	50	1800	40:1	Yes	Up to 2 ft/sec Adjustable Speed Control	3 HP Module	No	No	Not Included
		230 / 1	11.5									
		208 / **3**	6.6	60	2000							
		230 / **3**	6.2									
		460 / **3**	3.3									
9230	3HP	208 / **3**	9.8	60	5000	40:1	Yes	Up to 2 ft/sec Adjustable Speed Control	5 HP Module	No	Yes	Included
		230 / **3**	9.6									
9235	3HP	208 / **3**	12.8	60	3000	10:1	Yes	Up to 4 ft/sec Adjustable Speed Control	10 HP Module	Yes	Yes	Included
		230 / **3**	12.6									
9240	3HP	208 / **3**	9.8	80	8000	40:1	Yes	Up to 2 ft/sec Adjustable Speed Control	10 HP Module	No	Yes	Included
		230 / **3**	9.6									

Class of Operation Series 9200 - UL 325 Class III, IV

Type of Gate Vehicular Slide Gates Only

Max Gate Length 100 Ft (Installed Level)

Cycles Continuous

Operating Temperature 10° F to 140° F (-12° C to 62° C)
"Optional" heater kits recommended for colder temperatures.

Entrapment Protection Provision for connection of a non-contact sensor (Type B1) and/or a contact sensor (Type B2).

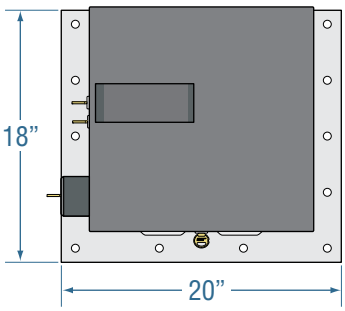

Heavy-Duty Pedestal Mounting Stand Kit

P/N 9200-135

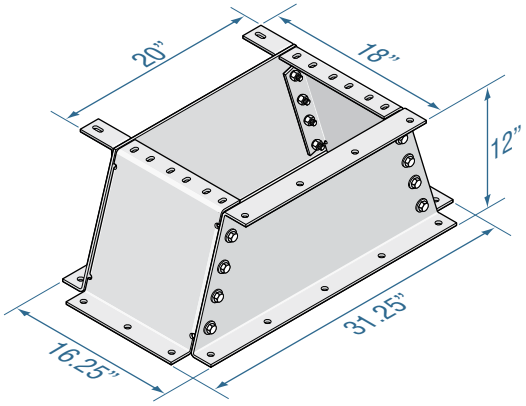

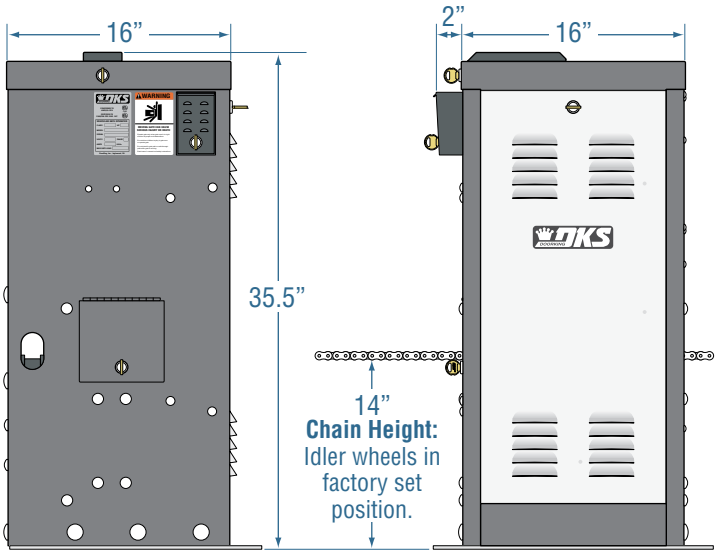

DoorKing, Inc. reserves the right to make changes in the products described in this manual without notice and without obligation of DoorKing, Inc. to notify any persons of any such revisions or changes. Additionally, DoorKing, Inc. makes no representations or warranties with respect to this manual. This manual is copyrighted, all rights reserved. No portion of this manual may be copied, reproduced, translated, or reduced to any electronic medium without prior written consent from DoorKing, Inc.

Slide Gate Requirements

Illustrations not to scale.

The operator is intended for installation only on gates used for vehicles. Pedestrians must be supplied with a separate access opening. The pedestrian access opening shall be designed to promote pedestrian usage. Locate the gate such that persons will not come in contact with the vehicular gate during the entire path of travel of the vehicular gate. (ref. UL 325 56.8.4.b)

Adjacent fence that covers open gate position.

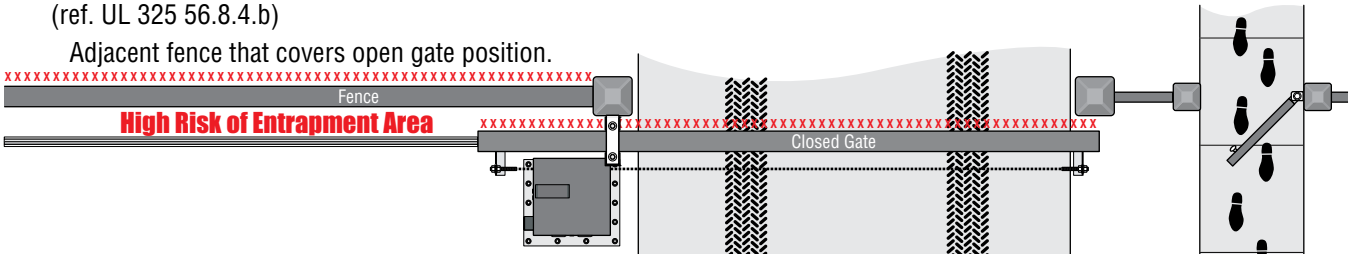

x x x All openings of a horizontal slide gate are guarded or screened from the bottom of the gate to a minimum of six (6) feet (1.83 m) above the ground to prevent a 2 1/4 inch (57.2 mm) diameter sphere from passing through the openings anywhere in the gate and in that portion of the adjacent fence that the gate covers in the open position. (ref. ASTM F2200-11a, 6.1.2)

Compliant openings less than 2 1/4".

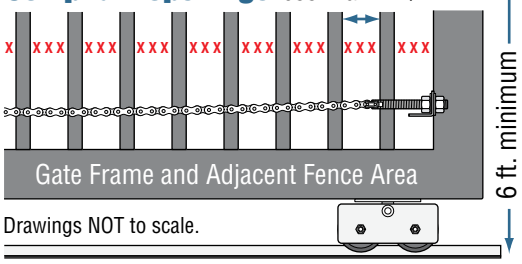

Drawings NOT to scale.

Non-compliant openings wider than 2 1/4".

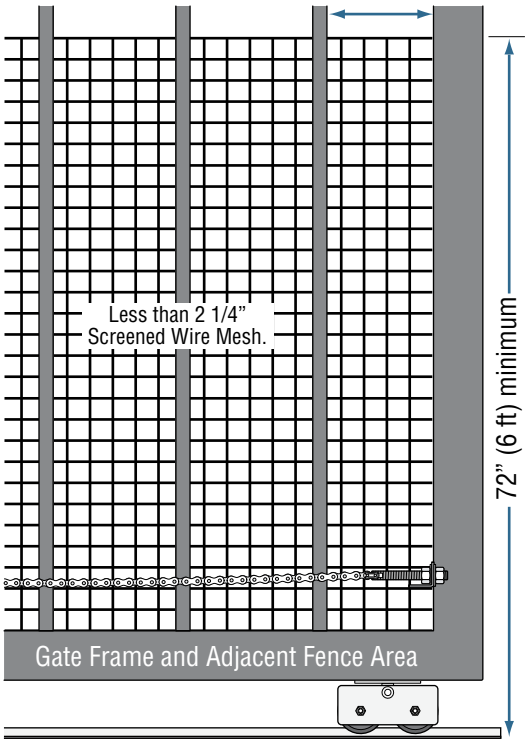

Note: Install screened wire mesh to an existing non-compliant gate and the adjacent fence that covers open gate position (See above).

Gates shall be designed, constructed and installed to not fall over more than 45 degrees from the vertical plane, when a gate is detatched from the supporting hardware.

A gap, measured in the horizontal plane parallel to the roadway, between a fixed stationary object nearest the roadway (such as a gate support post) and the gate frame when the gate is in either the fully open position or the fully closed position, shall not exceed 2 1/4 inch (57.2 mm). (ref. ASTM F2200 6.1.4)

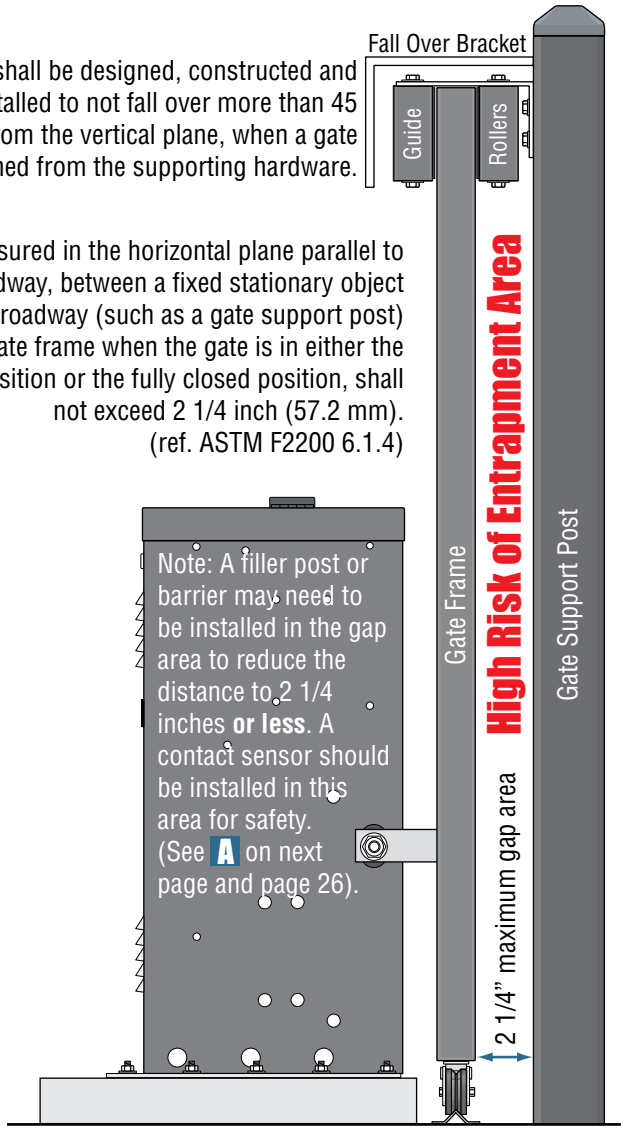

Safety Information for Slide Gate Operators

Illustration not to scale.

Entrapment protection devices are required to reduce the risk of injury. Install sensors where the risk of entrapment or obstruction exists while gate is moving. **Individual requirements will vary.** See pages 25-28 for more information on typical layout locations and setup.

Non-Contact Sensors (Photo Sensors)

1 Minimizes the potential of the gate closing on vehicular or other traffic that loops cannot sense. It can be installed on the secure **OR** non-secure side of gate.

2 Helps minimize the potential of entrapment during the back travel of the gate.

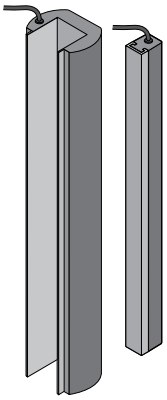

Contact Sensor (Reversing Edges)

A Installed on the fence to help minimize the potential of entrapment between the gate and fence. A filler post or barrier MAY need to be installed between fence and gate.

B Helps minimize the potential of entrapment during the back travel of the gate.

C Minimizes the potential of the gate closing on vehicular or other traffic that loops cannot sense.

Physical Stops

Positive stops shall be required to limit travel to the designed fully open and fully closed positions. These stops shall be installed either at the top of the gate, or at the bottom of the gate where such stops shall horizontally or vertically project no more than is required to perform their intended function.

Screened Wire Mesh

May be necessary on part of fence **AND** entire gate. See previous page for more information.

Warning Sign

Guide Rollers

See previous page for more information.

Automatic Exit Loop

(Optional) will provide an open command to the gate operator(s) when a vehicle is exiting the property.

Secure Side of Gate

Reverse Loop

Minimizes the potential of the gate closing when a vehicle is present. Number and placement of loops is dependent on the application.

Reverse Loop

Minimizes the potential of the gate closing when a vehicle is present. Number and placement of loops is dependent on the application.

Non-Secure Side of Gate

Warning Signs

Permanently mounted and easily visible from either side of the gate.

Note: DO NOT USE MMTC, Inc. Model IR55 Photo Sensor - P/N 8080-010 for the 9200 series slide gate operator.

Physical Stop

Separate Pedestrian Walkway

Located so pedestrians cannot come in contact with the vehicular gate.

ASTM F2200 Standard for Gate Construction

Vehicular gates should be constructed and installed in accordance with ASTM F2200; Standard Specification for Automated Vehicular Gate Construction. For a copy of this standard, contact ASTM directly at 610-832-9585; service@astm.org; or www.astm.org.

Important Safety Instructions

WARNING - To reduce the risk of injury or death:

1. READ AND FOLLOW ALL INSTRUCTIONS.
2. Never let children operate or play with gate controls. Keep the remote control away from children.
3. Always keep people and objects away from gate. **NO ONE SHOULD CROSS THE PATH OF THE MOVING GATE.**
4. Test the operator monthly. The gate MUST reverse on contact with a rigid object or stop or reverse when an object activates the non-contact sensors. After adjusting the force or the limit of travel, retest the gate operator. Failure to adjust and retest the gate operator properly can increase the risk of injury or death.
5. Use the emergency release only when the gate is not moving.
6. KEEP GATES PROPERLY MAINTAINED. Read the owner's manual. Have a qualified service person make repairs to gate hardware.
7. The entrance is for vehicles only. Pedestrians must use separate entrance.
8. **SAVE THESE INSTRUCTIONS!**

Instructions regarding intended installation:

- Install the gate operator only if:
  1. The operator is appropriate for the construction of the gate and the usage class of the gate.
  2. All openings of a horizontal slide gate are guarded or screened from the bottom of the gate to a minimum of 6 feet (1.83 m) above the ground to prevent a 2 ¼ inch (57.2 mm) diameter sphere from passing through the openings anywhere in the gate, and in that portion of the adjacent fence that the gate covers in the open position.
  3. All exposed pinch points are eliminated or guarded.
  4. Guarding is supplied for exposed rollers.
- The operator is intended for installation only on gates used for vehicles. Pedestrians must be supplied with a separate access opening. The pedestrian access opening shall be designed to promote pedestrian usage. Locate the gate such that persons will not come in contact with the vehicular gate during the entire path of travel of the vehicular gate.
- The gate must be installed in a location so that enough clearance is supplied between the gate and adjacent structures when opening and closing to reduce the risk of entrapment. Swinging gates should not open into public access areas.
- The gate must be properly installed and work freely in both directions prior to the installation of the gate operator. Do not over-tighten the operator clutch, pressure relief valve or reduce reversing sensitivity to compensate for a damaged gate.
- For gate operators utilizing Type D protection:
  1. The gate operator controls must be placed so that the user has full view of the gate area when the gate is moving.
  2. A warning placard shall be placed adjacent to the controls.
  3. An automatic closing device (such as a timer, loop sensor, or similar device) shall not be employed.
  4. No other activation device shall be connected.
- Controls intended for user activation must be located at least ten feet (10’) away from any moving part of the gate and where the user is prevented from reaching over, under, around or through the gate to operate the controls. Outdoor or easily accessible controls should have a security feature to prevent unauthorized use.
- The Stop and/or Reset button must be located in the line-of-sight of the gate. Activation of the reset control shall not cause the operator to start.
- A minimum of two (2) WARNING SIGNS shall be installed, one on each side of the gate where easily visible.
- For gate operators utilizing a non-contact sensor:
  1. See the instructions on the placement of non-contact sensors for each type of application.
  2. Care shall be exercised to reduce the risk of nuisance tripping, such as when a vehicle trips the sensor while the gate is still moving in the opening direction.
  3. One or more non-contact sensors shall be located where the risk of entrapment or obstruction exist, such as the perimeter reachable by a moving gate or barrier.

- For gate operators utilizing contact sensors:
  1. One or more contact sensors shall be located where the risk of entrapment or obstruction exist, such as at the leading edge, trailing edge, and post mounted both inside and outside of a vehicular horizontal slide gate.
  2. One or more contact sensors shall be located at the bottom edge of a vehicular vertical lift gate.
  3. One or more contact sensors shall be located at the pinch point of a vehicular vertical pivot gate.
  4. A hardwired contact sensor shall be located and its wiring arranged so that the communication between the sensor and the gate operator is not subjected to mechanical damage.
  5. A wireless contact sensor such as one that transmits radio frequency (RF) signals to the gate operator for entrapment protection functions shall be located where the transmission of the signals are not obstructed or impeded by building structures, natural landscaping or similar obstructions. A wireless contact sensor shall function under the intended end-use conditions.
  6. One or more contact sensors shall be located at the bottom edge of a vertical barrier (arm).

Important Notices

Vehicular gate operator products provide convenience and security. However, gate operators must use high levels of force to move gates and most people underestimate the power of these systems and do not realize the potential hazards associated with an incorrectly designed or installed system. These hazards may include:

- Pinch points
- Entrapment areas
- Reach through hazards
- Absence of entrapment protection devices
- Improperly located access controls
- Absence of vehicle protection devices
- Absence of controlled pedestrian access

In addition to these potential hazards, automated vehicular gate systems must be installed in accordance with the UL 325 Safety Standard and the ASTM F2200 Construction Standard. Most lay persons are unaware of, or are not familiar with, these standards. If an automated vehicular gate system is not properly designed, installed, used and maintained, serious injuries or death can result. Be sure that the installer has instructed you on the proper operation of the gate and gate operator system.

Be sure that the installer has trained you about the basic functions of the required reversing systems associated with your gate operating system and how to test them. These include reversing loops, inherent reversing system, electric edges, photoelectric cells, or other external devices.

- This Owner's Manual is your property. Keep it in a safe place for future reference.
- Be sure that all access control devices are installed a minimum distance of 10 feet away from the gate and gate operator, or in such a way that a person cannot touch the gate or gate operator while using the device. If access control devices are installed in violation of these restrictions, immediately remove the gate operator from service and contact your installing dealer.
- Loops and loop detectors, photo-cells or other equivalent devices must be installed to prevent the gate from closing on vehicular traffic.
- The speed limit for vehicular traffic through the gate area is 5 MPH. Install speed bumps and signs to keep vehicular traffic from speeding through the gate area. Failure to adhere to posted speed limits can result in damage to the gate, gate operator, and to the vehicle.
- Be sure that all persons who will use the gate system are familiar with the proper use of the gate and gate operator and are familiar with the possible hazards associated with the gate system.
- Be sure that warning signs are permanently installed on both sides of the gate in an area where they are fully visible to traffic.
- It is your responsibility to periodically check all entrapment protection devices. If any of these devices are observed to function improperly, remove the operator from service immediately and contact your installing or servicing dealer.
- Follow the recommended maintenance schedule.
- Do not allow children to play in the area of the operator or to play with any gate-operating device.
- To remove the gate operator from service, operate the gate to the full open position and then shut off power to the operator at the service panel.

UL325 Entrapment Protection

Class I

A vehicular gate operator (or system) intended for use in a home of one-to four single family dwelling, or a garage or parking area associated therewith.

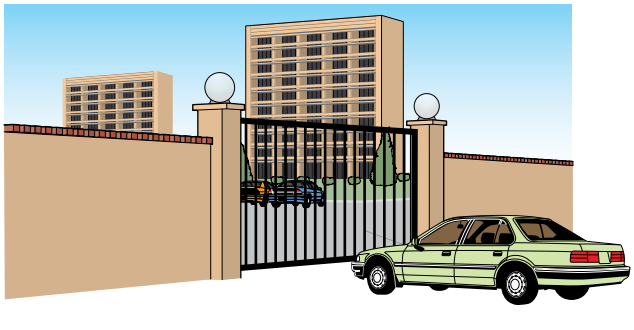

Class II

A vehicular gate operator (or system) intended for use in a commercial location or building such as a multi-family housing unit (five or more single family units) hotel, garages, retail store or other building servicing the general public.

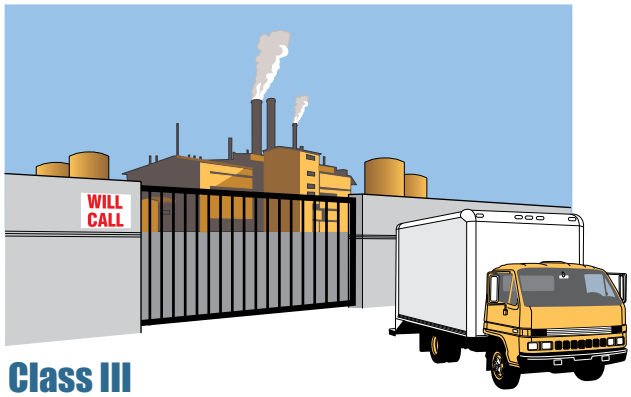

Class III

A vehicular gate operator (or system) intended for use in a industrial location or building such as a factory or loading dock area or other locations not intended to service the general public.

Class IV

A vehicular gate operator (or system) intended for use in a guarded industrial location or building such as an airport security area or other restricted access locations not servicing the general public, in which unauthorized access is prevented via supervision by security personnel.

This table illustrates the entrapment protection requirements for each of the four UL325 classes.

UL325 Classifications	Horizontal Slide, Vertical Lift, Vertical Pivot		Swing and Vertical Barrier (arm)	
	Primary Protection	Secondary Protection	Primary Protection	Secondary Protection
Class I and II	**A**	B1, B2 or D	A or C	A, B1, B2, C or D
Class III	**A, B1 or B2**	A, B1, B2, D or E	A, B1, B2 or C	A, B1, B2, C or D
Class IV	**A, B1, B2 or D**	A, B1, B2, D or E	A, B1, B2, C or D	A, B1, B2, C, D or E

A - Inherent entrapment protection system.
B1 - Provision for connection of, or supplied with, a non-contact sensor (photoelectric sensor or the equivalent). When used as the PRIMARY device, must be monitored.
B2 - Provision for connection of, or supplied with, a contact sensor (edge device or the equivalent). When used as the PRIMARY device, must be monitored.
C - Inherent adjustable clutch or pressure relief device.
D - Provision for connection of, or supplied with, an actuating device requiring continuous pressure to maintain opening or closing motion of the gate.
E - An inherent audio alarm.

Glossary

GATE - A moving barrier such as a swinging, sliding, raising, lowering, or the like, barrier, that is a stand-alone passage barrier or is that portion of a wall or fence system that controls entrance and/or egress by persons or vehicles and completes the perimeter of a defined area.

RESIDENTIAL VEHICULAR GATE OPERATOR – CLASS I - A vehicular gate operator (or system) intended for use in a home of one-to four single family dwelling, or garage or parking area associated therewith.

COMMERCIAL / GENERAL ACCESS VEHICULAR GATE OPERATOR - CLASS II - A vehicular gate operator (or system) intended for use in a commercial location or building such as a multi-family housing unit (five or more single family units), hotels, garages, retail store, or other building servicing the general public.

INDUSTRIAL / LIMITED ACCESS VEHICULAR GATE OPERATOR - CLASS III - A vehicular gate operator (or system) intended for use in an industrial location or building such as a factory or loading dock area or other locations not intended to service the general public.

RESTRICTED ACCESS VEHICULAR GATE OPERATOR - CLASS IV - A vehicular gate operator (or system) intended for use in a guarded industrial location or building such as an airport security area or other restricted access locations not servicing the general public, in which unauthorized access is prevented via supervision by security personnel.

VEHICULAR BARRIER (ARM) OPERATOR (OR SYSTEM) - An operator (or system) that controls a cantilever type device (or system), consisting of a mechanical arm or barrier that moves in a vertical arc, intended for vehicular traffic flow at entrances or exits to areas such as parking garages, lots or toll areas.

VEHICULAR HORIZONTAL SLIDE-GATE OPERATOR (OR SYSTEM) - A vehicular gate operator (or system) that controls a gate which slides in a horizontal direction that is intended for use for vehicular entrance and exit to a drive, parking lot, or the like.

VEHICULAR SWING-GATE OPERATOR (OR SYSTEM) - A vehicular gate operator (or system) that controls a gate which moves in an arc in a horizontal plane that is intended for use for vehicular entrance and exit to a drive, parking lot, or the like.

SYSTEM - In the context of these requirements, a system refers to a group of interacting devices intended to perform a common function.

WIRED CONTROL - A control implemented in a form of fixed physical interconnections between the control, the associated devices, and an operator to perform predetermined functions in response to input signals.

WIRELESS CONTROL - A control implemented in means other than fixed physical interconnections (such as radio waves or infrared beams) between the control, the associated devices, and an operator to perform predetermined functions in response to input signals.

INHERENT ENTRAPMENT PROTECTION SYSTEM - A system, examples being a motor current or speed sensing system, which provides protection against entrapment upon sensing an object and is incorporated as a permanent and integral part of the operator.

EXTERNAL ENTRAPMENT PROTECTION DEVICE - A device, examples being an edge sensor, a photoelectric sensor, or similar entrapment protection device, which provides protection against entrapment when activated and is not incorporated as a permanent part of an operator.

ENTRAPMENT - The condition when an object is caught or held in a position that increases the risk of injury.

SECTION 1 - INSTALLATION

Prior to beginning the installation of the slide gate operator, we suggest that you become familiar with the instructions, illustrations, and wiring guide-lines in this manual. This will help insure that your installation is performed in an efficient and professional manner compliant with UL 325 safety and ASTM F2200 construction standards.

The proper installation of the vehicular slide gate operator is an extremely important and integral part of the overall access control system. Check all local building ordinances and building codes prior to installing this operator. Be sure your installation is in compliance with local codes.

1.1 Gate Hardware

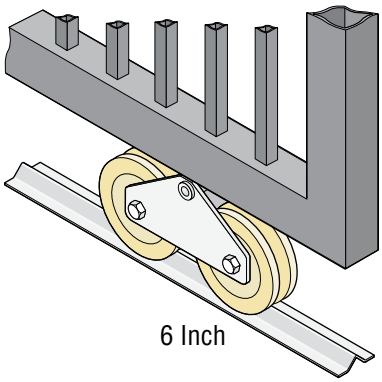

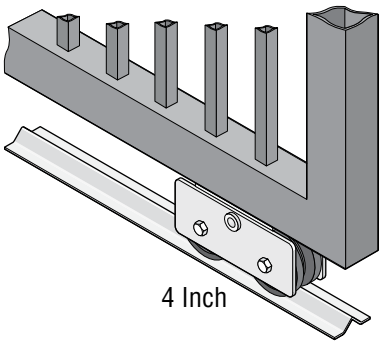

DoorKing has a full line of **Tandem V-wheels** that are ideal for heavy gates and will ensure safe, reliable and long lasting gate operation. The gate must be properly installed and roll smoothly in both directions.

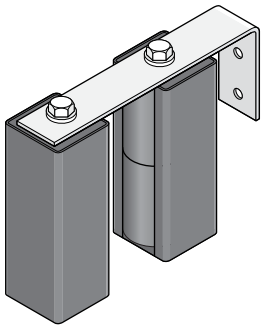

Guide Rollers with Protective Covers
Helps to minimize a pinch point on the gate.

1.2 Underground Conduit Requirements

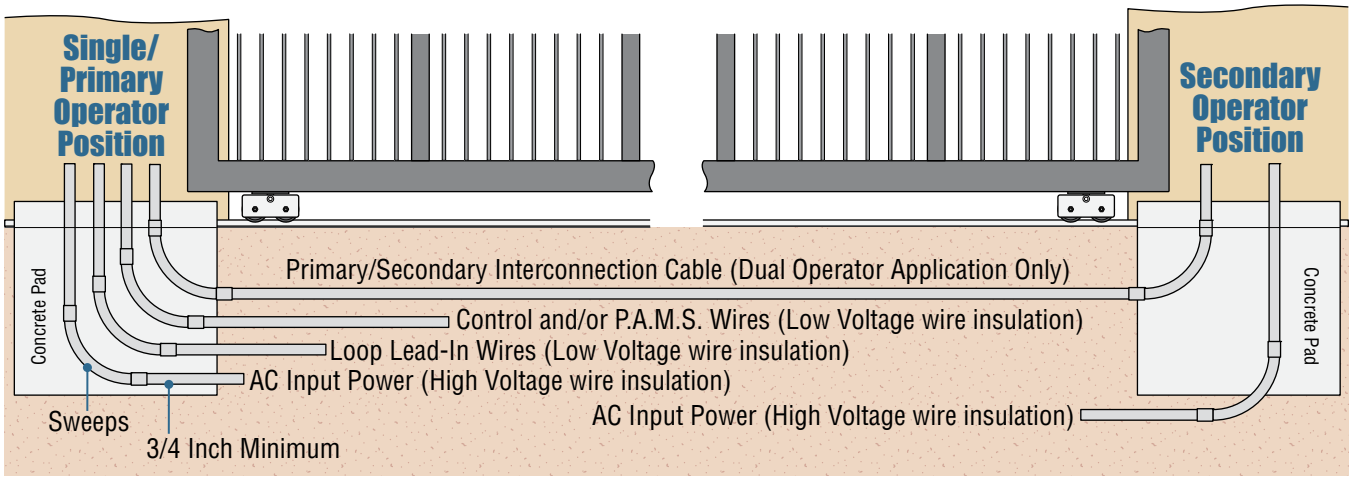

- The conduit requirements are for a typical slide gate operator installation (the secondary operator is shown for those applications where a secondary operator may be used). **The conduit requirements for your application may vary from this depending on your specific needs.**
- Use only sweeps for conduit bends. Do not use 90° elbows as this will make wire pulls very difficult and can cause damage to wire insulation.
- DoorKing recommends using 3/4-inch conduit.
- Be sure that all conduits are installed in accordance with local codes.
- **Never** run low voltage rated wire insulation in the same conduit as high voltage rated wire insulation.

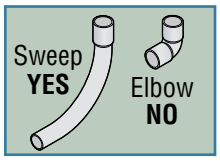

1.3 Installation Options

The **operator MUST be level**. See the next page for typical gate types. We suggest that you contact the local building department to determine the required depth of the concrete pad since soil conditions and code requirements vary from city to city.

#1 - Operator Mounted Directly on a Concrete Pad

Typically used when gates are less than 20 feet in length and under 2000 lbs. in weight. V-rail v-wheel gate type shown.

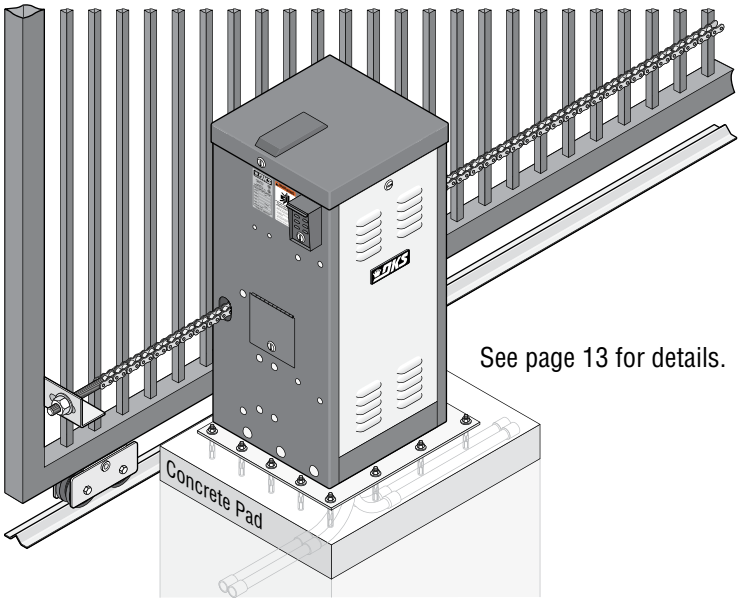

See page 13 for details.

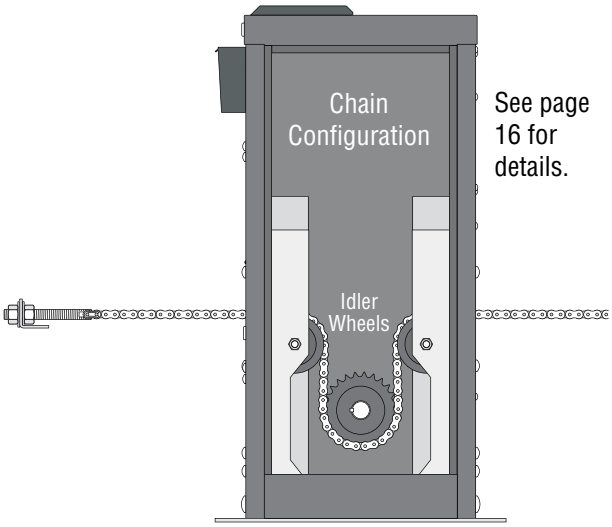

See page 16 for details.

Idler wheels are **factory set** in the correct position. Remove the chain knock-outs in operator housing.

#2 - Operator Mounted on the Heavy-Duty Pedestal Mounting Stand

The pedestal mounting stand kit (P/N 9200-135) **MUST** be used when gates require a chain tray (Typically for gates that are longer than 20 feet in length). The chain tray helps support the weight of the chain and reduce the chain stretching that occurs over time. DoorKing offers a chain tray kit that will fit any length gate (P/N 2601-270 10 ft. connecting sections).
DoorKing highly recommends using the pedestal stand for gates heavier than 2000 lbs. for a more secure attachment to a larger and heavier concrete pad. V-rail v-wheel gate type shown.

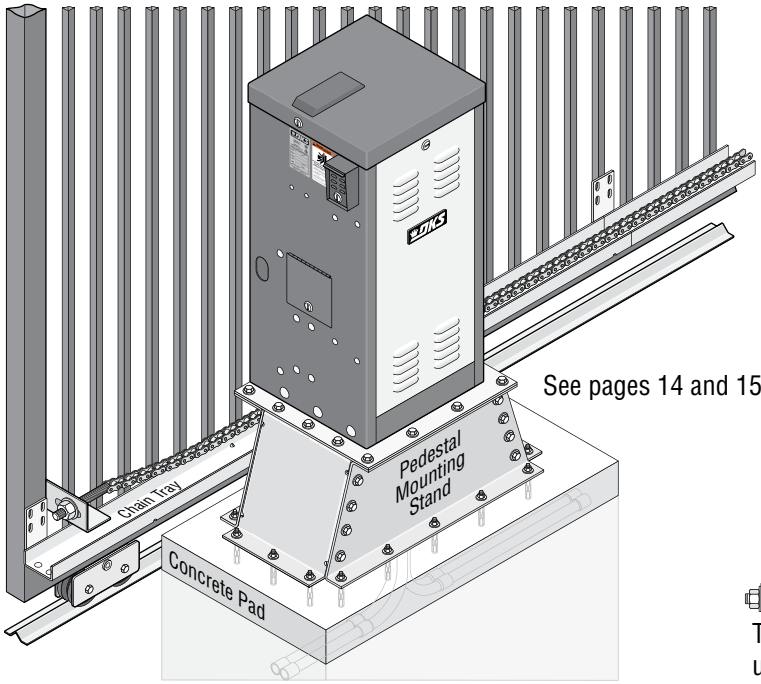

See pages 14 and 15 for details.

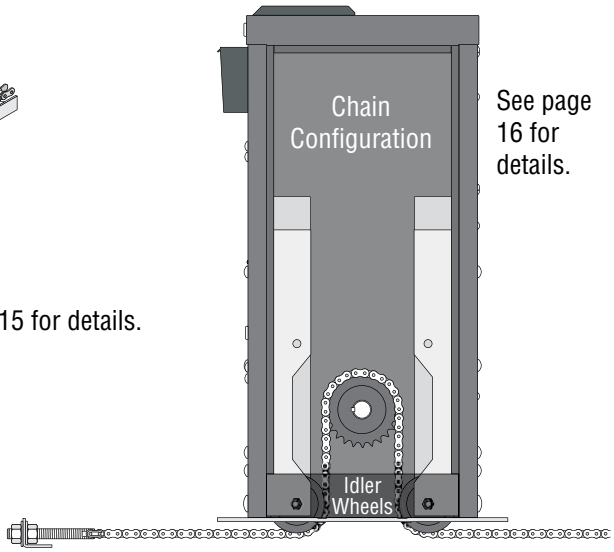

See page 16 for details.

The idler wheels must be moved to the **lower position** to use a chain tray. **DO NOT** remove the chain knock-outs.

1.3 Continued

Gate Types

- Steel or Aluminum.
- 8,000 lb Max. Weight per Gate (9240).

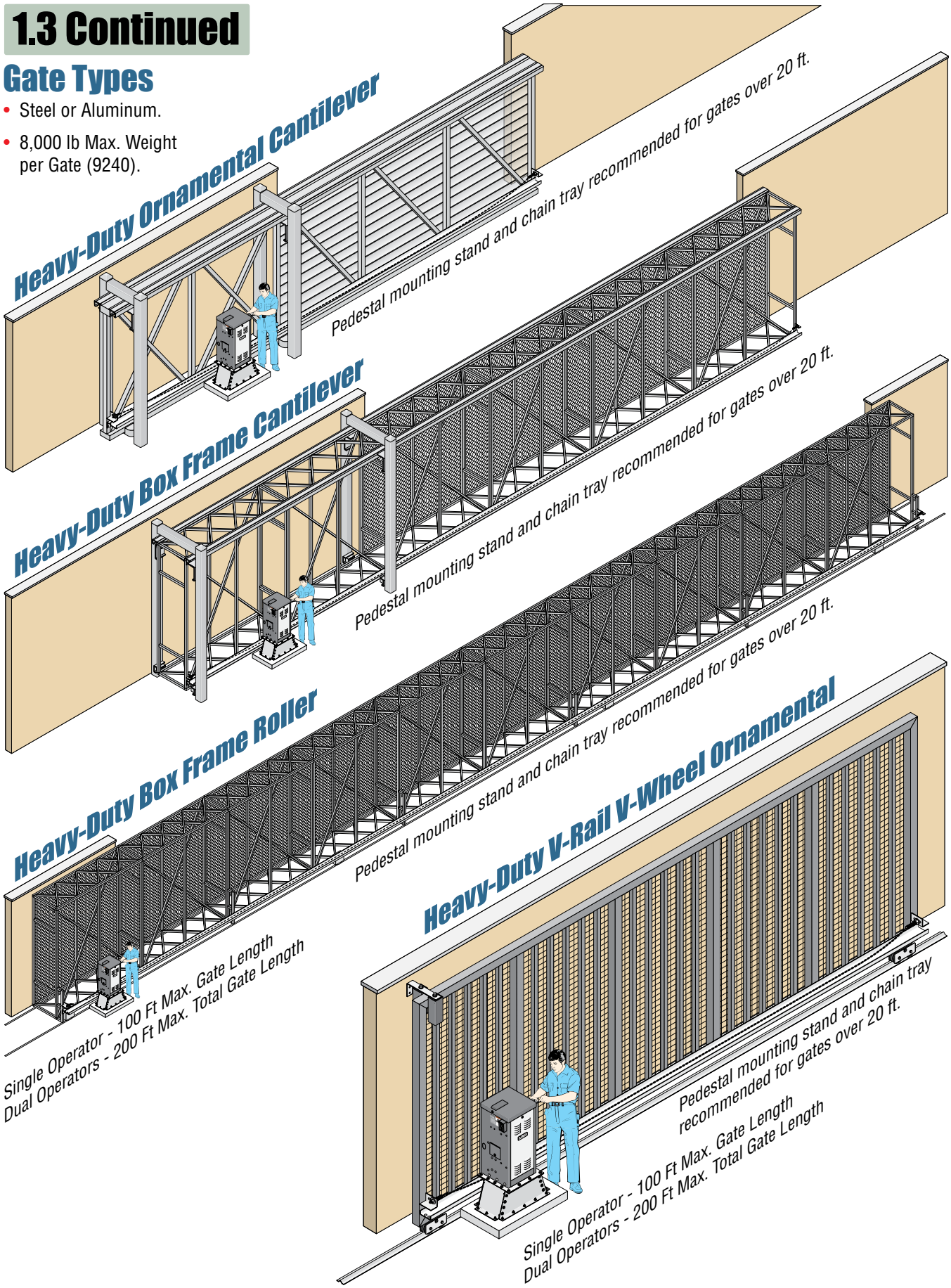

1.4 Installation #1

Operator Mounted Directly on a Concrete Pad

The operator is heavy. Two persons are required when handling the operator during installation.

Tip: Trace the base plate of the operator on a piece of masonite (Not provided) and make a template to help locate where the conduit runs will be positioned in the concrete pad.

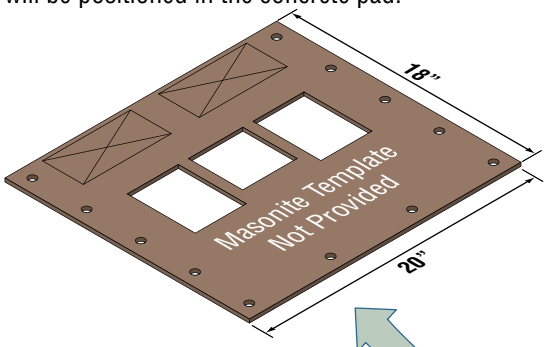

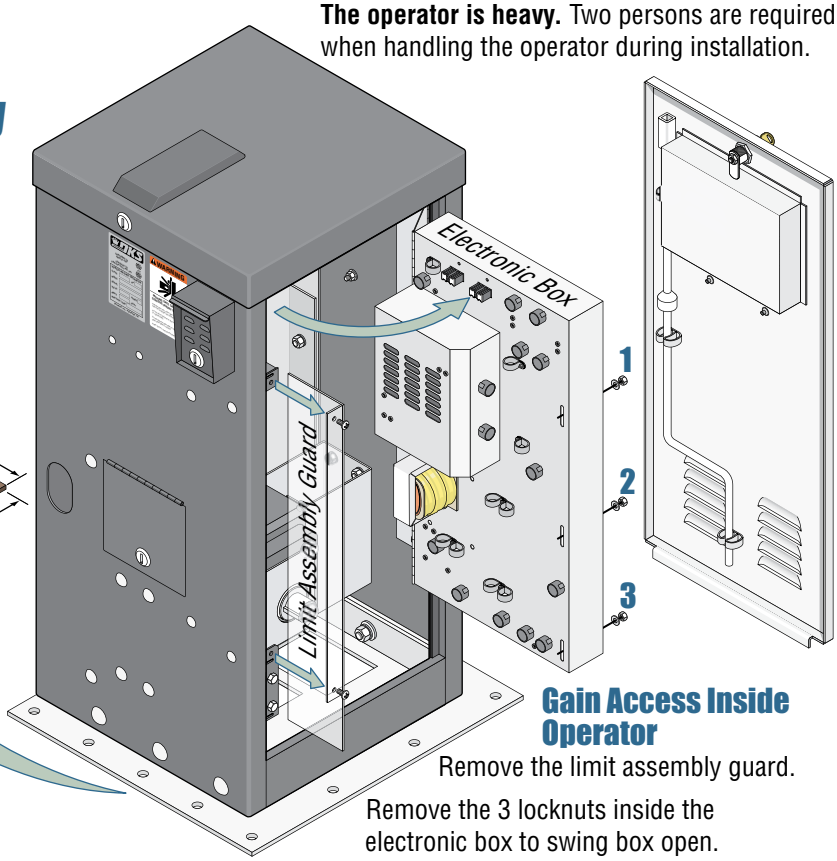

Caution: DO NOT lay the operator on it’s side or oil will leak out of the gear reducer.

Gain Access Inside Operator

Remove the limit assembly guard.

Remove the 3 locknuts inside the electronic box to swing box open.

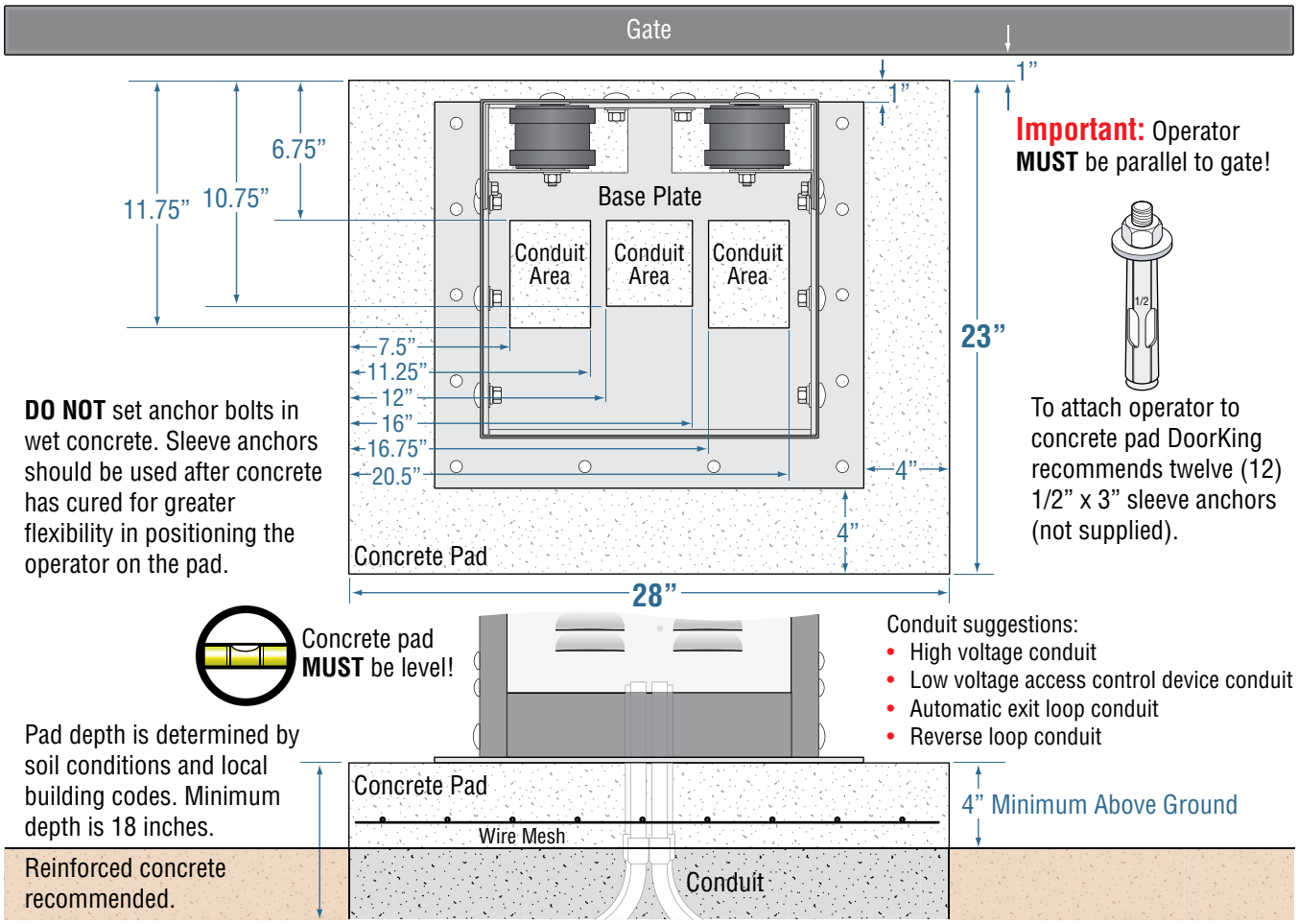

Important: Operator **MUST** be parallel to gate!

DO NOT set anchor bolts in wet concrete. Sleeve anchors should be used after concrete has cured for greater flexibility in positioning the operator on the pad.

To attach operator to concrete pad DoorKing recommends twelve (12) 1/2” x 3” sleeve anchors (not supplied).

Concrete pad **MUST** be level!

Pad depth is determined by soil conditions and local building codes. Minimum depth is 18 inches.

Conduit suggestions:

- High voltage conduit
- Low voltage access control device conduit
- Automatic exit loop conduit
- Reverse loop conduit

1.5 Installation #2

Operator Mounted on the Heavy-Duty Pedestal Mounting Stand

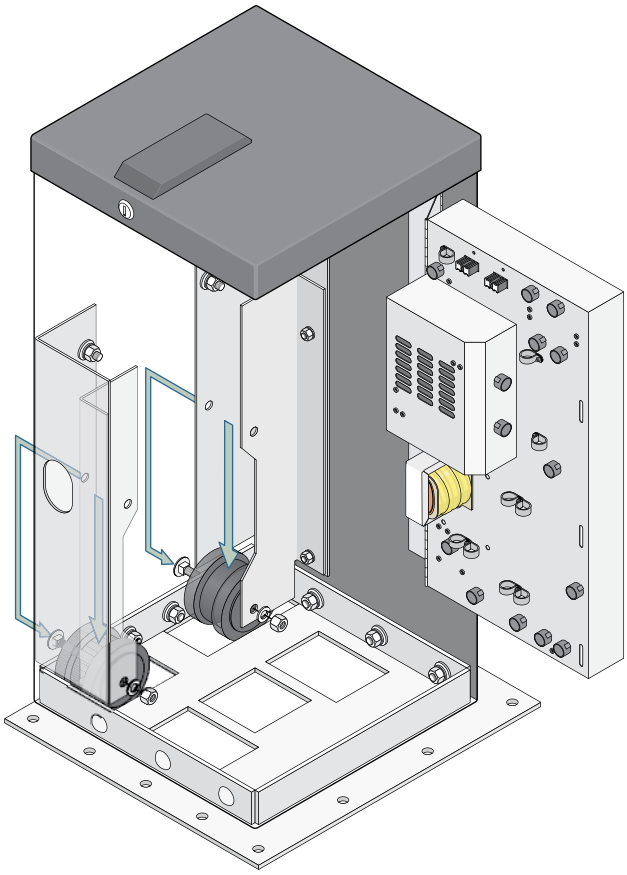

The operator is heavy. Two persons are required when handling the operator during installation.

Caution: DO NOT lay the operator on it's side or oil will leak out of the gear reducer.

1. Assemble and install the pedestal mounting stand kit (P/N 9200-135) on the concrete pad, then mount the operator to it. Follow the instructions that came with the pedestal mounting stand kit for assembly of the stand.

2. Move the idler wheels to the lower operating position in the operator **AFTER** the operator has been installed on the pedestal mounting stand. See the previous page's instructions to gain access inside the operator.

3. Install chain tray kit on the gate (See next page for details).

Important: Pedestal mounting stand **MUST** be parallel to gate!

DO NOT set anchor bolts in wet concrete. Sleeve anchors should be used after concrete has cured for greater flexibility in positioning the pedestal stand on the pad.

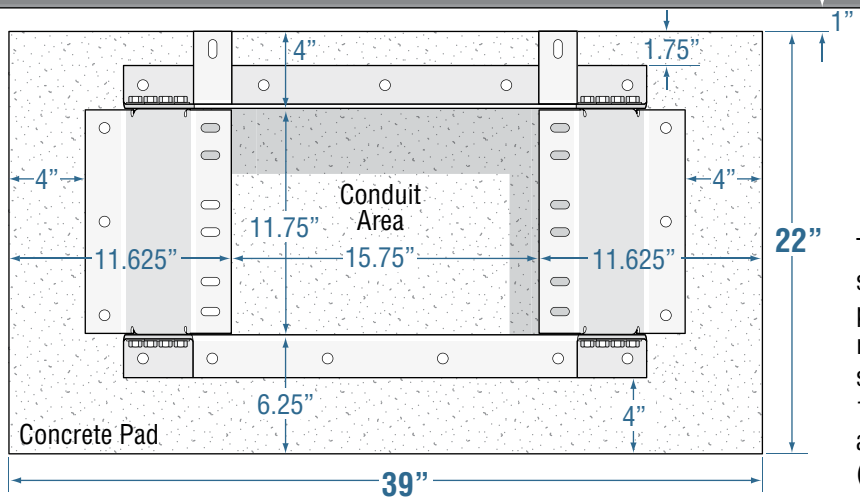

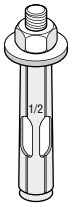

To attach pedestal stand to concrete pad DoorKing recommends sixteen (16) 1/2" x 3" sleeve anchors (not supplied).

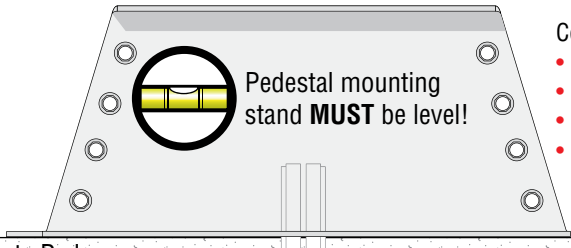

Conduit suggestions:

- High voltage conduit
- Low voltage access control device conduit
- Automatic exit loop conduit
- Reverse loop conduit

Pad depth is determined by soil conditions and local building codes. Minimum depth is 18 inches.

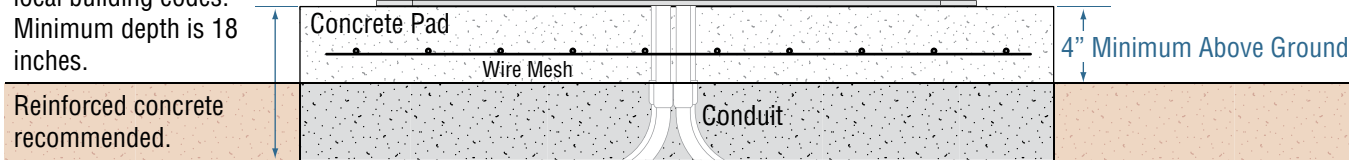

Reinforced concrete recommended.

1.5 Continued - Chain Tray Kit

Installing the Chain Tray Kit

A chain tray is recommended for gates longer than 20 ft. to support the weight of the chain. DoorKing offers a chain tray kit in sections to fit any length gate. (DoorKing P/N 2601-270 10 Ft. section)

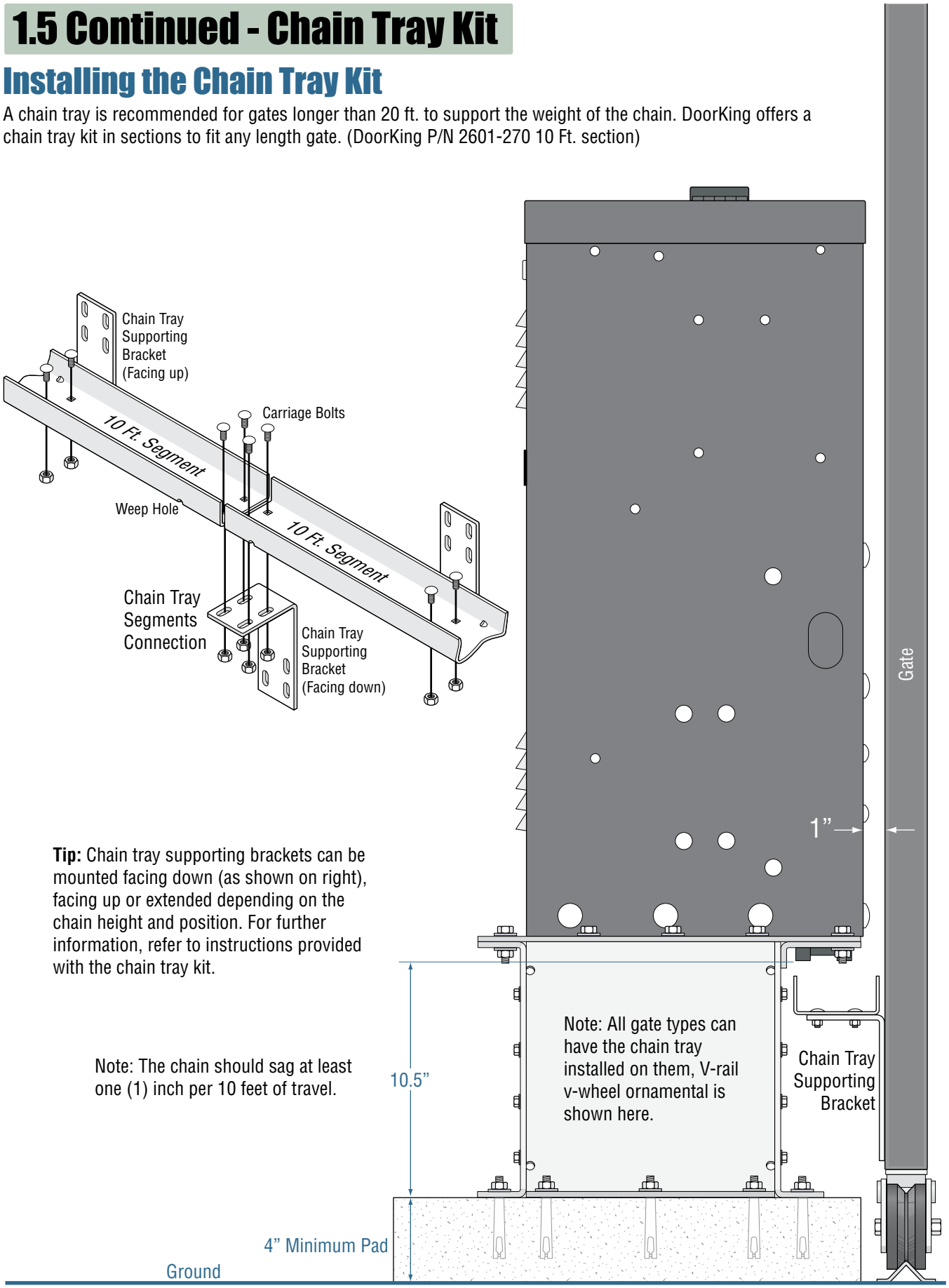

Tip: Chain tray supporting brackets can be mounted facing down (as shown on right), facing up or extended depending on the chain height and position. For further information, refer to instructions provided with the chain tray kit.

Note: The chain should sag at least one (1) inch per 10 feet of travel.

1.6 Chain Installation

Note: Be sure to follow all 3 guidelines. Installing the chain in any other manner will cause excessive noise, chain idler wheel wear and chain stretching.

1 Operator **MUST** be parallel to gate!

2 Chain brackets **MUST** align with idler wheels so chain stays parallel to gate!

3 Chain brackets **MUST** be mounted so the chain remains the same height as it is on the idler wheels!

Directly on a Concrete Pad - #1 Factory Set Idler Wheels

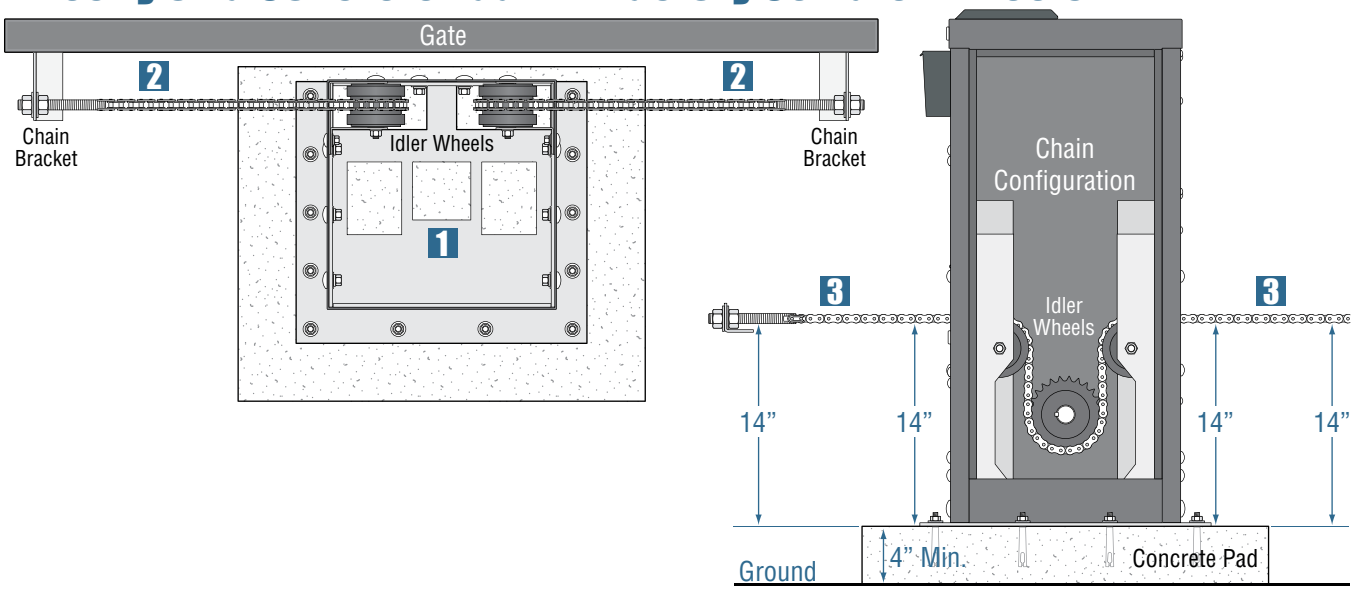

Heavy-Duty Pedestal Mounting Stand - #2 Lower Idler Wheel Position

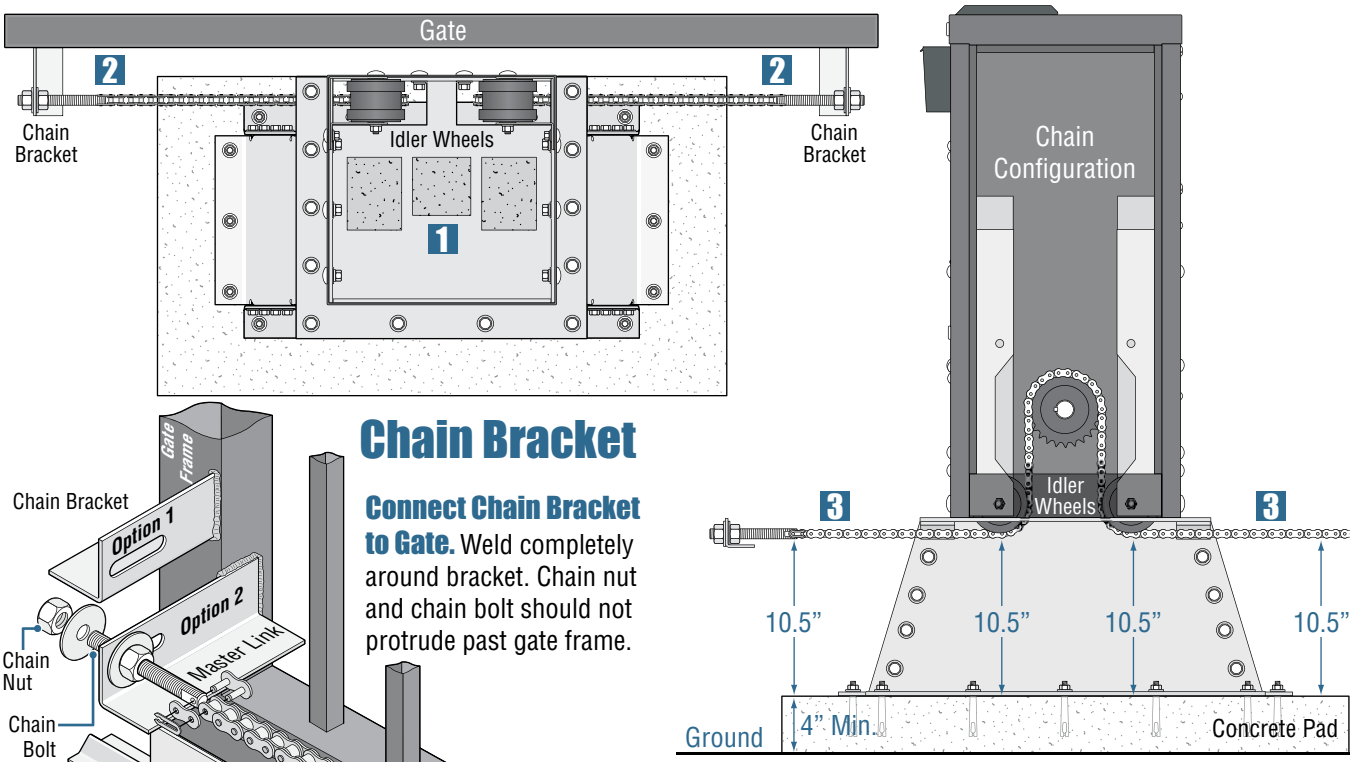

Chain Bracket

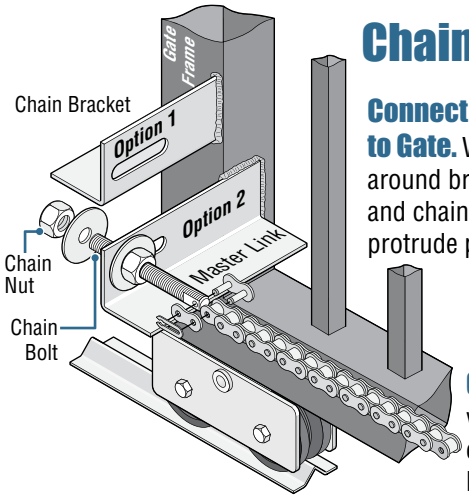

Connect Chain Bracket to Gate. Weld completely around bracket. Chain nut and chain bolt should not protrude past gate frame.

Connect Chain to Chain Bracket. Connect chain to chain bolt with master link. Adjust the chain nuts to tighten the chain. The chain should sag no more than one (1) inch per 10 feet of travel. **Do not over tighten the chain.**

1.7 Installation of Warning Signs

This DoorKing Slide Gate Operator is shipped with two warning signs. The purpose of the warning sign is to alert uninformed persons, and to remind persons familiar with the gate system, that a possible hazard exists so that appropriate action can be taken to avoid the hazard or to reduce exposure to the hazard. See page 5 for typical placement of signs.

- **Permanently install the supplied warning signs in locations so that the signs are visible by persons on both sides of the gate.**
- Use appropriate hardware such as wood or sheet metal screws (not supplied) to install the warning signs.

SECTION 2 - AC POWER TO OPERATOR(S)

Before attempting to connect any wiring to the operator, be sure that the circuit breaker in the electrical panel is in the OFF position. Permanent wiring must be installed to the operator as required by local electrical codes. It is recommended that a licensed electrical contractor perform this work.

Since building codes vary from city to city, we highly recommend that you check with your local building department prior to installing any permanent wiring to be sure that all wiring to the operator (both high and low voltage) complies with local code requirements.

THIS GATE OPERATOR MUST BE PROPERLY GROUNDED!!

Typical Grounding Sources

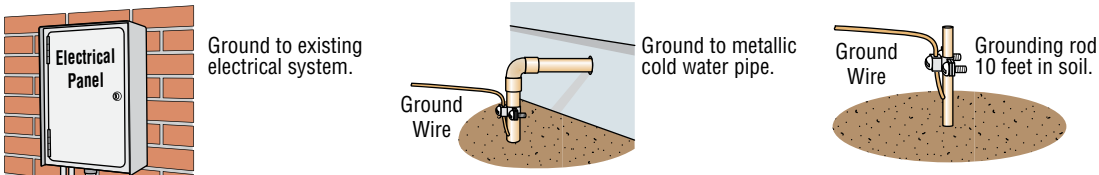

IMPORTANT: Ground wire shown without safety protection for clarity. Make sure ground wire is protected from being touched or electrical shock could occur!

2.1 High Voltage Wire Runs

The 9200 draws significant power and **each** operator should have a **"Dedicated"** circuit breaker at the power source. If power wiring is greater than the maximum distance shown, it is recommended that a service feeder be installed. When large gauge wire is used, a separate junction box must be installed for the operator connection. The wire table is based on stranded copper wire. Wire run calculations are based on the NEC recommended maximum 3% voltage drop on the power line, plus an additional 10% reduction in distance to allow for other losses in the system.

This table illustrates the high voltage AC power wire size and distance limitations for a single operator.

Never run low voltage rated wire insulation in the same conduit as high voltage rated wire insulation.

		Amps	Wire Size / Max Distance in Feet			
			12 AWG	10 AWG	8 AWG	6 AWG
Single Phase	9210 Single 1 HP: 115 VAC	9.7	110	175	295	440
	9210 Single 1 HP: 208 VAC	5.0	390	620	1040	1560
	9210 Single 1 HP: 230 VAC	4.9	440	700	1170	1760
	9220 Single 2 HP: 208 VAC	11.7	165	270	450	675
	9220 Single 2 HP: 230 VAC	11.5	180	290	490	735
Three Phase	9210 Single 1 HP: 208 VAC	3.4	680	1090	1815	2720
	9210 Single 1 HP: 230 VAC	3.3	730	1170	1950	2920
	9210 Single 1 HP: 460 VAC	1.7	2900	4600	7800	11700
	9220 Single 2 HP: 208 VAC	6.6	340	545	905	1360
	9220 Single 2 HP: 230 VAC	6.2	400	640	1070	1605
	9220 Single 2 HP: 460 VAC	3.3	1500	2400	4000	6000
	9230, 9240 Single 3 HP: 208 VAC	9.8	225	365	610	915
	9230, 9240 Single 3 HP: 230 VAC	9.6	255	415	690	1035
	9235 Single 3 HP: 208 VAC	12.8	177	280	465	700
	9235 Single 3 HP: 230 VAC	12.6	195	315	525	790

"Optional" Heater Installation Note: When installing a heater, refer to the **"high voltage AC power wire size and distance limitations"** table on the instruction sheet with the heater kit for AC power wire run limitations.

2.2 High Voltage Terminal Connection

- Route incoming AC power wire through the high voltage conduit and run wire in the operator electronic box as shown.
- Be sure wiring is installed in accordance with local codes. Be sure to color code all wiring.
- It is recommended that a surge suppressor be installed on the high voltage power lines to help protect the operator and circuit board from surges and power fluctuations.
- Dual operators (Primary/Secondary) require AC power to **EACH** operator.

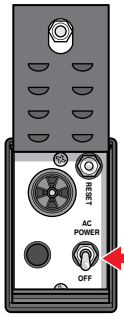

DO NOT power up and cycle the operator until the **"DIP-Switches"** and the **"Limit Switches"** have been adjusted. **Damage could occur to the gate and operator.**

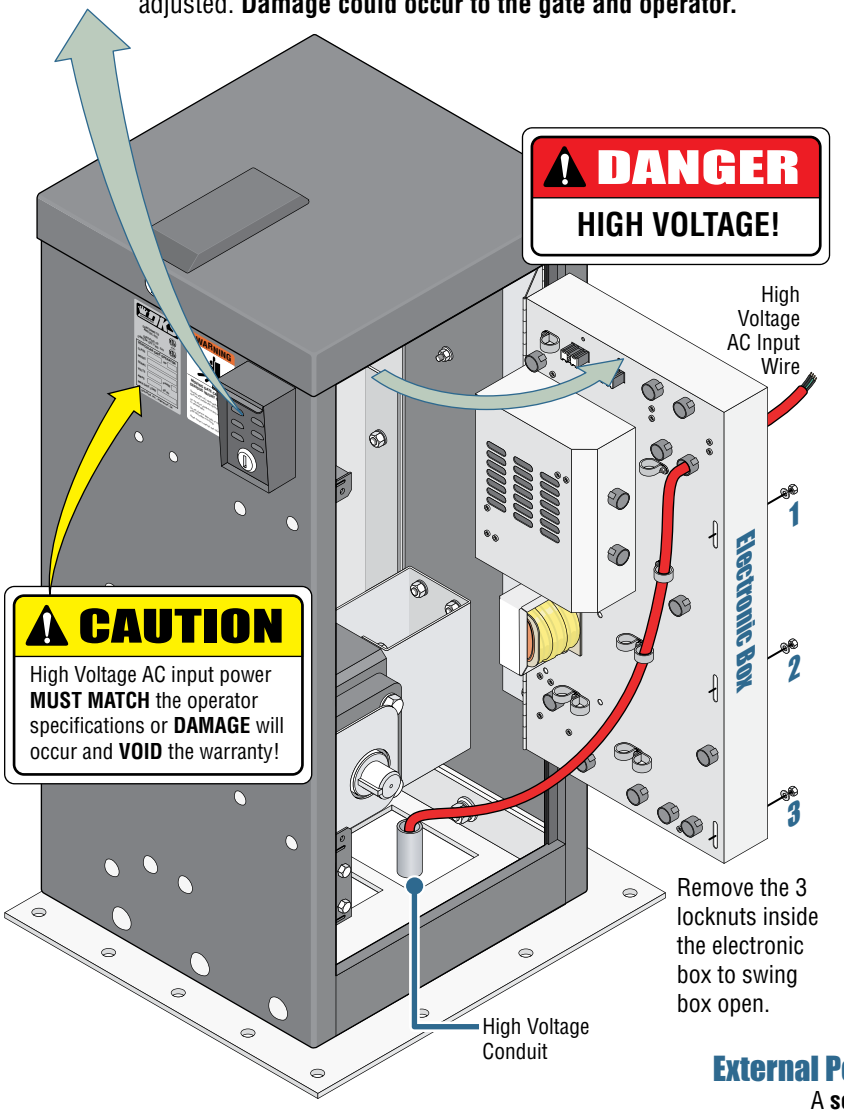

Remove the 3 locknuts inside the electronic box to swing box open.

Keep wire clear of all moving parts.

Dual Operators

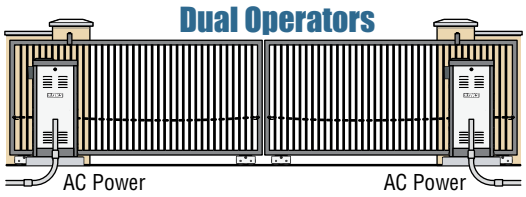

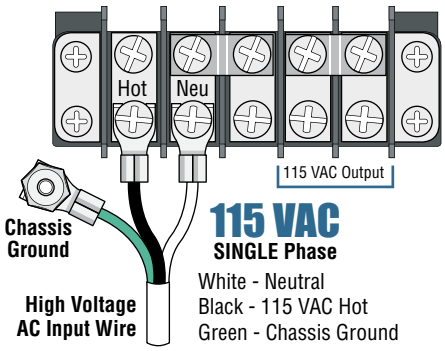

115 VAC
SINGLE Phase
White - Neutral
Black - 115 VAC Hot
Green - Chassis Ground

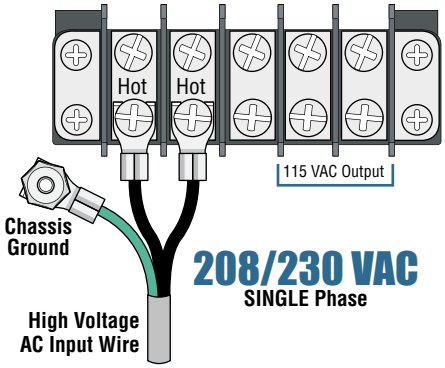

208/230 VAC
SINGLE Phase

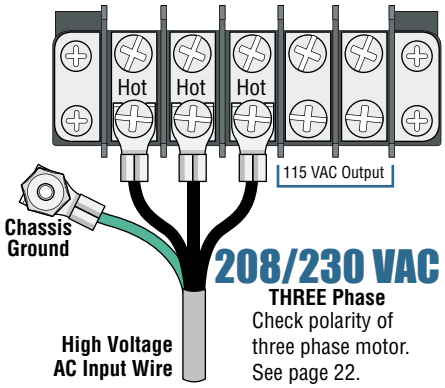

208/230 VAC
THREE Phase
Check polarity of three phase motor. See page 22.

External Power Disconnect Switch

A **separate** power disconnect switch may be needed in your area. Check local building codes before installation. Recommended by DoorKing.

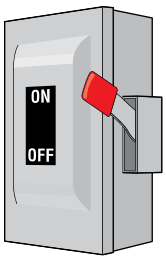

SECTION 3 - ADJUSTMENTS

The switch settings and adjustments in this chapter should be made after your installation and wiring to the operator(s) is complete. **Whenever any of the programming switches on the circuit board are changed, power must be shut-off, and then turned back on for the new setting to take effect.**

3.1 Circuit Board Description and Adjustments

LEDs Indicates that low voltage power is applied to the circuit board. **Input LEDs** should be OFF and will only illuminate when the input is activated (seep age 29). **Limit LEDs** will be on when the respective limit switch is activated.

Single Channel Loop Detector
See page 28.

Dual Channel Loop Detector
See page 32.

AC Module Adjustment
9220, 9230, 9235, and 9240 models

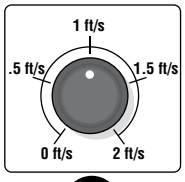

Min Max
Speed
See page 24.

Mechanical Disc Brake Plug P8
9235 model ONLY

Motor Plug P6

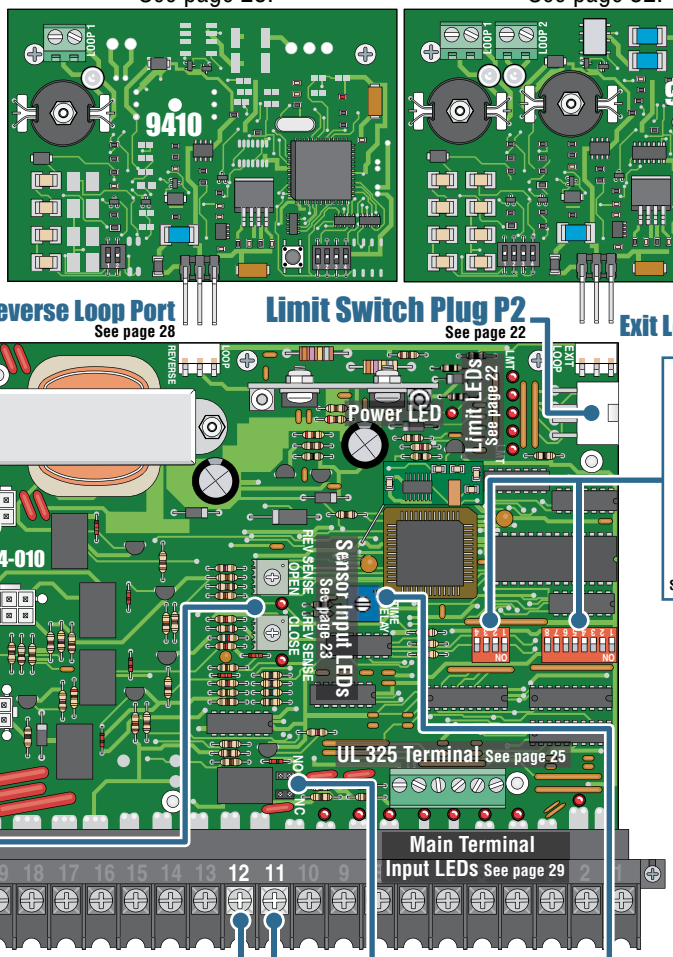

Reverse Loop Port
See page 28

Limit Switch Plug P2
See page 22

Exit Loop Port See page 28

DIP-Switches
Set the DIP-switches on the circuit board to the desired setting. See switch descriptions on next 2 pages.

SW 2 is Upside-Down on Board

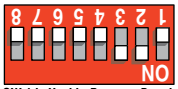

SW 1 is Upside-Down on Board

Self-Test
Self-test (when turned on) SW 2, switch 1.

SW 2 is Upside-Down on Board

CAUTION

Do not run self-test with the operator connected to the gate. The drive chain **MUST** be disconnected before running the self-test. This feature is designed for bench testing **ONLY**.

Inherent Reverse Sensors
Adjust reversing sensitivity for open and close directions. Full counter clockwise for minimum sensitivity, full clockwise for maximum sensitivity. See page 23.

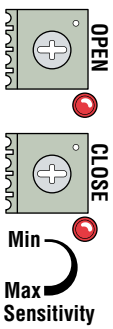

Dry Relay Contact
Dry relay contacts (terminals 11-12) can be set for Normally Open (NO) or Normally Closed (NC) operation by placing the relay shorting bar on the N.O. or N.C. pins respectively. SW 1, switches 4 and 5 must be set to control relay. See next 2 pages for descriptions.

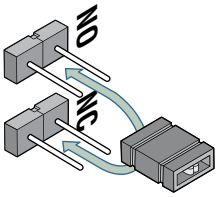

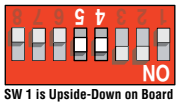

SW 1 is Upside-Down on Board

Auto-Close Timer
Auto-close timer (when turned on) SW 1, switch 2.

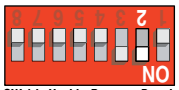

SW 1 is Upside-Down on Board

Adjust from 1 second (full counter-clockwise) to approximately 23 seconds (full clockwise).

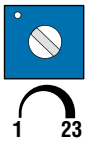

3.2 DIP-Switch SW 1 and SW 2 Settings

The two DIP-switches located on the circuit board are used to program the operator to operate in various modes and to turn on or off various operating features. Whenever a switch setting is changed, power to the operator must be turned OFF and then turned back on for the new setting to take affect. Check and review ALL switch settings prior to applying power to the operator.

Left 4 Switches - SW 2
SW 2 is Upside-Down on Circuit Board.

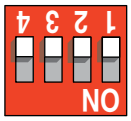

Typical Settings

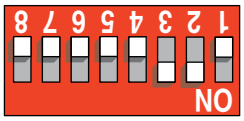

SW 1 - Right 8 Switches
SW 1 is Upside-Down on Circuit Board.

SW 1 - Right 8 Switches

Switch	Function	Setting	Description
1	Changes the direction the operator will open/close the gate.		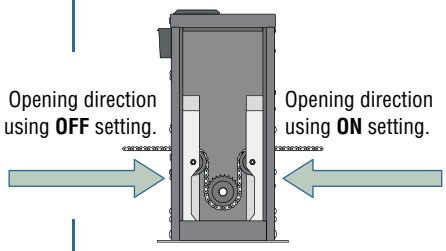 Factory Set Configuration 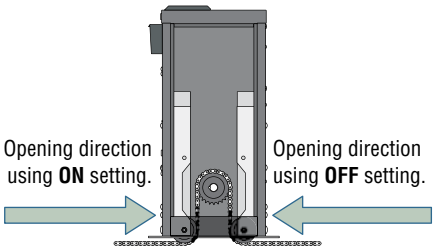 Lower Configuration
2	Auto-Close Timer	OFF	Auto-close timer is OFF. Manual input required to close gate.
		ON	Auto-close timer is ON. Adjustable from 1-23 seconds to close gate.
3	Exit Loop Port Output	Jumper Wire Needed OFF	The output wired to terminal #4 becomes the output from the loop detector installed in the **EXIT** loop port. Plug-in loop detector required for "OFF" function.
	Full Open Input	ON	**Normal Setting.** Terminal #4 is a normal full open input for a single gate operator.
4 and 5	Relay Activation and LED Indicator Light Activation	4-OFF 5-OFF	Relay activates and LED is ON when the gate is fully open.
		4-OFF 5-ON	Relay activates and LED is ON when the gate is not closed.
		4-ON 5-OFF	Relay activates and LED is ON when the gate is opening and open.
		4-ON 5-ON	Relay activates and LED is ON when the gate is opening and closing.
6	Warn Before Operate	OFF	**Normal Setting.** No sound.
		ON	Internal alarm will sound before gate starts and throughout gate's cycle.
7	Reverses Gate	OFF	**Normal Setting.** Input to terminal #6 and/or reverse loops will REVERSE gate during CLOSE cycle.
	Stops Gate	ON	Input to terminal #6 and/or reverse loops will STOP gate during CLOSE cycle.
8	Quick-Close Timer Override	OFF	**Normal Setting.** Timer will function normally.
		ON	Opening gate will stop and begin to close as soon as all reversing inputs (Reverse loops, photo sensors) are cleared regardless of the distance the gate has opened.

SW 2 - Left 4 Switches

Switch	Function	Setting	Description
1	Self-Test	OFF	**Normal Setting.** Normal gate operation.
		ON	Self-test mode. Operator **MUST** be disconnected from gate to run self-test.
2	Gate Opens Uphill	OFF	**Normal Setting.** Normal gate operation.
		ON	**MUST** be ON if gate opens UPHILL.
3	Gate Opens Downhill	OFF	**Normal Setting.** Normal gate operation.
		ON	**MUST** be ON if gate opens DOWNHILL.
4	Spare	OFF	Leave in the OFF position.

3.2 Continued

The two DIP-switches located on the circuit board (Upside-Down) are used to program the operator to operate in various modes and to turn on or off various operating features. Whenever a switch setting is changed, power to the operator must be turned OFF and then turned back on for the new setting to take affect. Check and review ALL switch settings prior to applying power to the operator.

Switch Definitions

Typical Settings

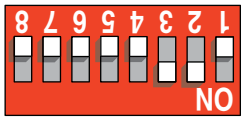

SW 1 - Right 8 Switches

SW 1 is Upside-Down on Circuit Board.

Switch 1 Motor direction switch - **Must** OPEN the gate upon initial AC power up and open command. If the open command begins to close the gate, turn AC power off and reverse this switch.

Switch 2 Turns the auto-close timer on or off. Can be adjusted from 1 to 23 seconds to close gate.

Switch 3 A device wired to terminal #4 (Switch 3 **ON**) is a normal full open input. The output wired to terminal #4 (Switch 3 **OFF**) becomes the output of a plug-in loop detector that is installed in the EXIT loop port of the circuit board (Which must be installed for the **"OFF"** setting to function). A jumper wire is needed to open and close gate(s). Terminal #4 jumpered to #5 is used for **partially** opening an automatic exit loop using a **single channel** plug-in loop detector for a single gate operator (Page 28) **OR** terminal #4 jumpered to #2 will **fully** open bi-parting gates using a **dual channel** plug-in loop detector (Page 32).

Switches 4-5 These work in conjunction with each other and determine when the relay on the board will be activated. This relay can be used as a switch for various functions such as illuminating a warning light when the gate is moving, or turning on a green light when the gate is full open. If a magnetic lock is used with the gate operator, these switches must be set for magnetic lock operation which limits the relay to activate only when the gate is opening and full open.

Switch 6 Warn Before Operate, When set to the **ON** position, the internal alarm in the operator will start sounding 2-3 seconds prior to the gate starting and continue throughout the gate's cycle.

Switch 7 Determines if an input to terminal #6 (Photo Sensors) **AND/OR** reverse loops will reverse **OR** stop a **CLOSING gate**. A tailgating vehicle **can activate** terminal #6 (Photo sensors) and/or reverse loops **while** the gate is in the closing cycle from the previous vehicle's authorized entry:
If switch 7 is turned **OFF** (Reverse), the closing gate that gets activated by a tailgating vehicle will reverse back to the open position, possibly allowing the tailgating vehicle **unauthorized entry while the gate is reversing back to the open position**.
If switch 7 is turned **ON** (Stop), the closing gate that gets activated by a tailgating vehicle will stop, partially or completely blocking the pathway, **NOT** allowing the tailgating vehicle to enter without proper authorization. The gate will not move until all sensors are clear, usually forcing the tailgating vehicle that activated the sensors to back away from the gate. The gate will then continue until closed, helping prevent the tailgating vehicle from unauthorized entry.

Switch 8 Turning the quick-close feature on will cause the auto close timer to close the gate after 1 second, regardless of the setting of the auto close timer potentiometer. This will also cause an **opening gate** to stop and reverse when the reverse loops and/or photo sensors are cleared. This feature, along with turning switch 7 **ON** above, is useful to help prevent tailgating vehicles from unauthorized entry.

Typical Settings

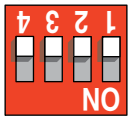

SW 2 - Left 4 Switches

SW 2 is Upside-Down on Circuit Board.

Switch 1 This switch is a self-test feature that checks various functions of the circuit board and is used for bench test only.
Do not run this test with the operator connected to the gate.

Switch 2 Set to the OFF position for normal operation. Set to the ON position if gate OPENS in an UPHILL direction.

Switch 3 Set to the OFF position for normal operation. Set to the ON position if gate OPENS in an DOWNHILL direction.

Switch 4 Spare switch, leave in the **OFF** position.

3.3 Limit Switches

Check the polarity of "Three Phase" operator ONLY: Position the gate half way open. Give open command and while gate is opening, activate the appropriate limit switch with your finger. Gate should **STOP**. If it does not, activate the other limit switch. If this STOPS the gate, AC power wires must be changed (Reverse the connection of any 2 wires and re-check limits).

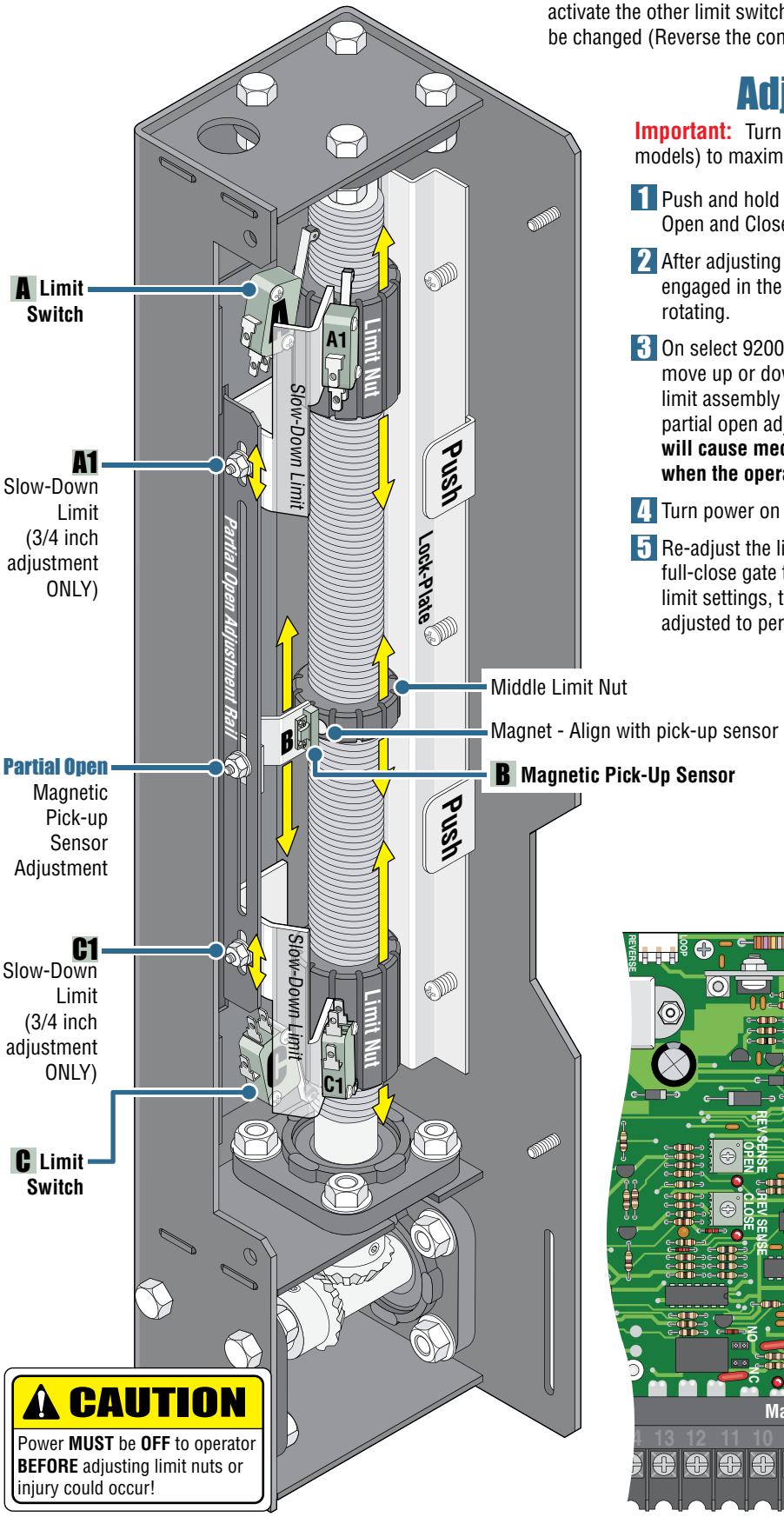

CAUTION

Power **MUST** be **OFF** to operator **BEFORE** adjusting limit nuts or injury could occur!

Adjust Limit Nuts

Important: Turn power **OFF** and set AC module (On select models) to maximum speed before adjusting limit nuts!

1. Push and hold the lock plate down where shown to adjust the Open and Close limit nuts.
2. After adjusting the limit nuts, be sure that the lock-plate is engaged in the slots on the limit nuts to prevent them from rotating.
3. On select 9200 models, the slow-down limit assembly will move up or down 3/4 inch. **DO NOT** remove the slow-down limit assembly from the 3/4 inch slot and re-attach it in the partial open adjustment rail to gain further adjustment. **This will cause mechanical damage to the switch assembly when the operator is activated.**
4. Turn power on and activate the gate operator.
5. Re-adjust the limit nuts as necessary for full-open and full-close gate travel. After you are satisified with the gate limit settings, the AC module (On select models) can then be adjusted to personal preference (See page 24).

Partial Open Feature: When using the partial open feature, the operator's access control device must be connected to terminal #5⚠. Adjust the middle limit nut and magnetic pick-up sensor assembly to the gate's desired stopping position. Be sure to align the magnet (Recessed in the limit nut) with the magnetic pick-up sensor.

Limit LEDs

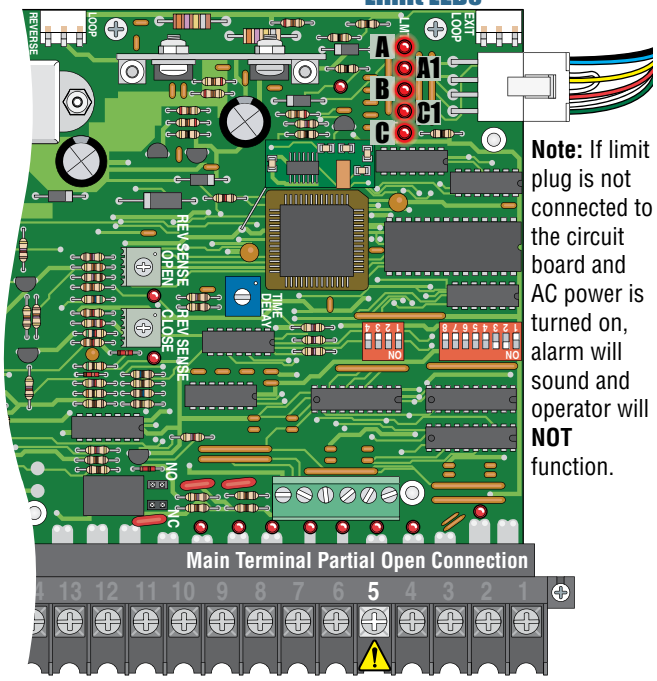

Note: If limit plug is not connected to the circuit board and AC power is turned on, alarm will sound and operator will **NOT** function.

3.4 Inherent Reverse Sensors Adjustment

This vehicular gate operator is equipped with an inherent adjustable reversing sensor (Type A) used as the primary entrapment protection system according to UL 325 standards. **The gate will reverse direction after "physically" encountering an obstruction in either the opening or closing gate cycle**.

If the Auto-Close Timer (DIP-switch SW 1, switch 2) is ON and the gate physically encounters an obstruction during the **CLOSING** cycle, it will reverse to the open position and **HOLD** the gate at this position (Soft shutdown condition). Another input command is needed before the gate will reset and close again.

If the Partial Open Feature is being used and the gate physically encounters an obstruction during the **CLOSING** cycle, the gate will only reverse to the **FULL** open limit switch setting and **NOT** the partial open setting.

For the reverse system to function correctly, the gate must be properly installed and work freely in both directions and the limit switches must be properly adjusted before adjusting these sensors. The ideal adjustment will allow the operator to move the gate through its entire travel cycle without reversing, but will reverse upon contact with an obstruction with no more than 40 Lbs of force. This force can be measured with a gate scale.

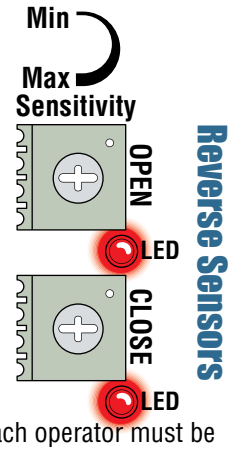

1. Momentarily jumper a wire across terminals 1 and 4 to OPEN the gate.
2. After opening gate reaches full speed, slowly rotate the OPEN reverse sensor clockwise until the LED lights up and gate reverses direction. Rotate the OPEN reverse sensor back counter-clockwise approximately 1/8 turn to decrease the sensitivity (LED will turn off). The gate will assume a soft shutdown so momentarily jumper a wire across terminals 1 and 4 to cycle the operator.
3. Momentarily jumper a wire across terminals 1 and 4 to CLOSE the gate.
4. After closing gate reaches full speed, slowly rotate the CLOSE reverse sensor clockwise until the LED lights up and the gate reverses direction. Rotate the CLOSE reverse sensor back counter-clockwise approximately 1/8 turn to decrease the sensitivity (LED will turn off). The gate will assume a soft shutdown so momentarily jumper a wire across terminals 1 and 4 to cycle the operator.
5. Cycle the gate a few times to be sure that it cycles completely. The current sensor may need to be adjusted if gate will not reverse properly (See 3.5 below)

Note: Each operator must be individually adjusted if dual operators have been installed.

Test the operator reversing sensitivity:

Place an immobile object along the gate path, allowing the gate to strike it while in the **open** and **close** cycles. The gate must reverse direction after striking the object. If it does not, increase the OPEN and CLOSE reverse sensitivity (steps 2 and 4) and repeat this testing until the correct sensitivity has been achieved in **BOTH** directions. The operator will assume a soft shutdown after striking and reversing the gate which will require a momentary jumper wire across terminals 1 and 4 to cycle the operator again.

3.5 Current Sensor Adjustment

This vehicular gate operator uses a current sensing device to detect any obstructions in the path of the opening or closing gate. The current sensor uses a sensing coil with a given number of turns through it to monitor the current flow into the operator. Each time the wire passes through the coil, it is considered a turn. The number of turns through the sensing coil is dependant on the operating voltage of the operator, the speed of the gate and the weight of the gate.

In general, light weight gates may require additional turns of wire through the current sensor, while heavier gates may require less turns. In addition, the speed of the gate can affect how the current sensor works. Gates running at a higher speed may require less turns of wire through the sensor. **CAUTION – HIGH VOLTAGE:** Be sure power is turned OFF before changing the number of wire turns to the current sensor. If you are setting the reverse sensors (section 3.4 above) and reach the full sensitive position without activating the reversing function, add an additional turn of wire through the current sensor. If you are decreasing the sensitivity and the gate will not run properly, reduce the number of turns through the current sensor.

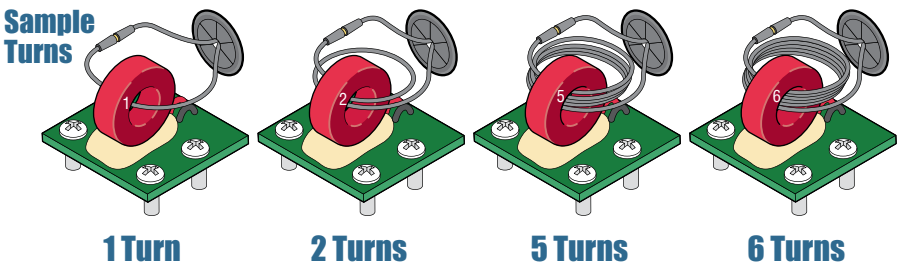

Voltage and Phase	Turns
115 Single Phase	1
208 Single Phase	2
230 Single Phase	2
208 Three Phase	5
230 Three Phase	6

3.6 AC Module Adjustment

The 9220, 9230, 9235 and 9240 models are equipped with an AC module that allows you to adjust the speed of the gate from 0 to 2 feet per second. To adjust the speed, simply rotate the speed control knob clockwise to increase the gate speed, or counter-clockwise to decrease the gate speed. The digital readout on the AC module will display the gate speed.

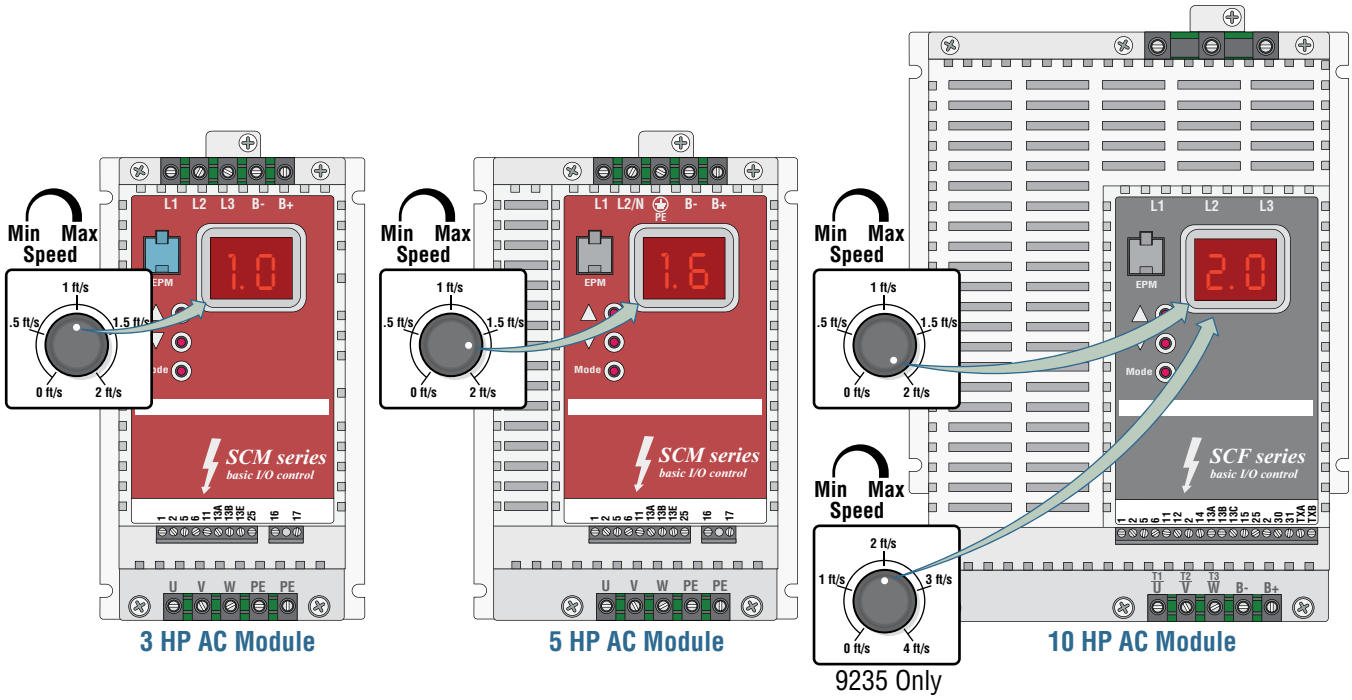

SECTION 4 - ENTRAPMENT AND SAFETY PROTECTION

Secondary Entrapment Protection Devices:

In addition to the inherent reversing sensor system, the 9200 Series has a 6-pin UL 325 terminal for the connection of **photo sensors**-Type B1 and **reversing edges**-Type B2 secondary entrapment protection devices required by UL 325 standards. Entrapment protection devices **must be installed** to reduce the risk of injury. Install these devices where the risk of entrapment or obstruction exists while the gate is moving. The 9200 Series offers numerous options to meet your specific needs. The next 2 pages show wiring and typical positioning of the entrapment protection devices but specific installations will vary.

Note: Secondary entrapment protection devices will open the gate to the "Partial Open" setting when the opening device is connected to main terminal #5 (See page 30 for opening device wiring information).

4.1 UL 325 Terminal Description

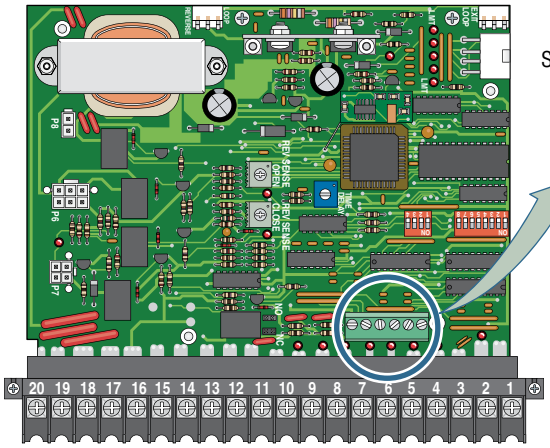

6-Pin UL 325 Terminal

Secondary Entrapment Protection Device Connection

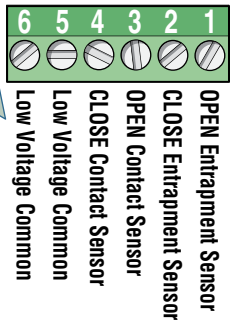

Note: The 6-pin terminal can be unplugged from circuit board for easy wire connections.

All inputs are normally open (NO).

115 VAC Convenience Outlets

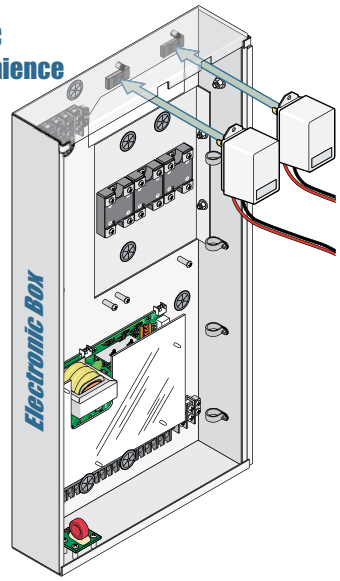

1 OPEN Entrapment Sensor (Photo Sensor): Obstructed opening-direction photo beam will stop the gate **during the opening-direction only.** Gate will resume the open cycle when the obstructed photo beam has been cleared.

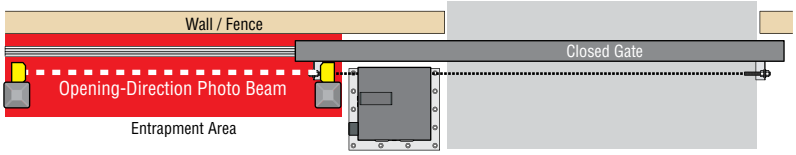

2 CLOSE Entrapment Sensor (Photo Sensor): Obstructed closing-direction photo beam will stop the gate **during the closing-direction only.** Gate will resume the close cycle when the obstructed photo beam has been cleared.

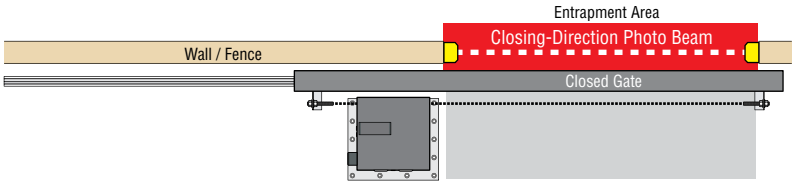

3 OPEN Contact Sensor (Reversing Edge(s)): Obstructed opening-direction reversing edge(s) will stop, then reverse the gate to the close position **during the opening-direction only.**

- After the gate reverses to the full close position, any opening input will cycle the gate again. Note: If the gate is opening by a time clock and an opening-direction reversing edge gets obstructed, the gate will return to the closed position and another input (automatic exit loop, reverse loop. etc.) is needed to cycle the gate open again.
- When the **opening-direction** reversing edge(s) gets obstructed and the gate is traveling back to the close position and the **closing-direction** reversing edge gets obstructed, the gate will **stop** and enter a soft shutdown condition (See page 34).

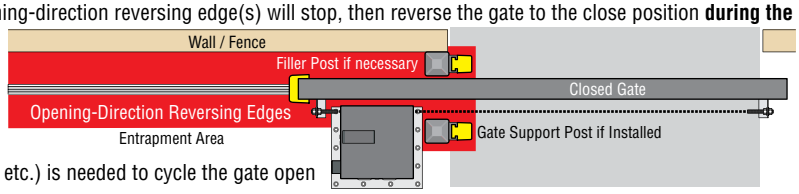

4 CLOSE Contact Sensor (Reversing Edge): Obstructed closing-direction reversing edge will stop, then reverse the gate to the open position, **during the closing-direction only.**

- After the gate reverses to the open position, the timer will automatically close the gate (if it is turned on). If the closing-direction reverse edge is activated a **second** time prior to the gate reaching the close position, the operator will **stop** and enter a soft shutdown condition (See page 34).
- When the **closing-direction** reversing edge gets obstructed and the gate is traveling back to the open position and the **opening-direction** revering edge gets obstructed, the gate will **stop** and enter a soft shutdown condition (See page 34).

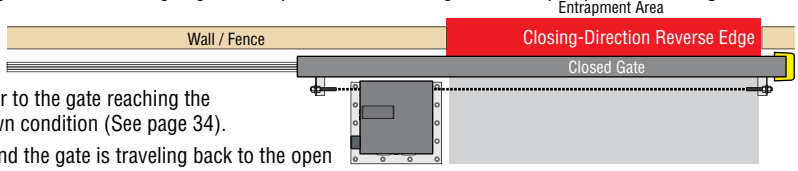

5 & 6 Low Voltage Common: Common terminals for all the secondary entrapment protection device inputs.

4.2 Secondary Entrapment Protection Device Locations

Typical UL Photo Sensor mounting height and distance away from gate.

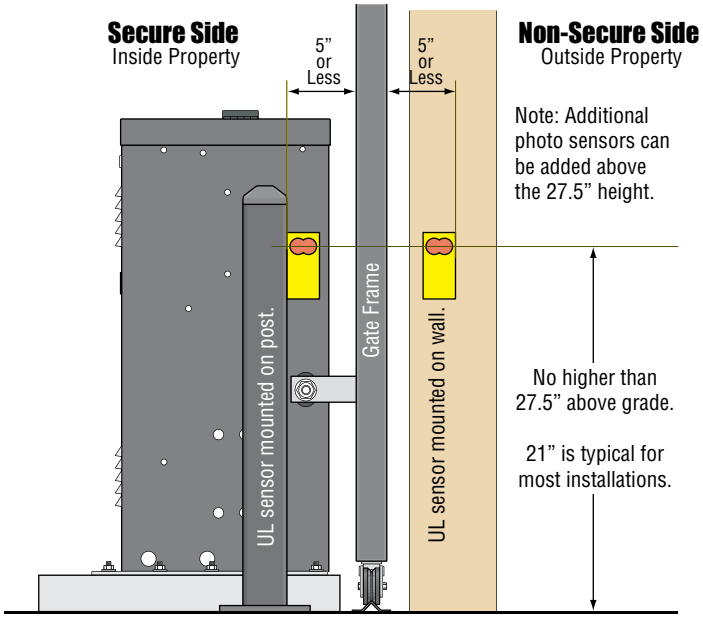

Photo sensors may be installed on either side of gate frame, as close as practical to the gate but no further away than 5".

If the distance between the gate and wall is greater than 2 1/4".

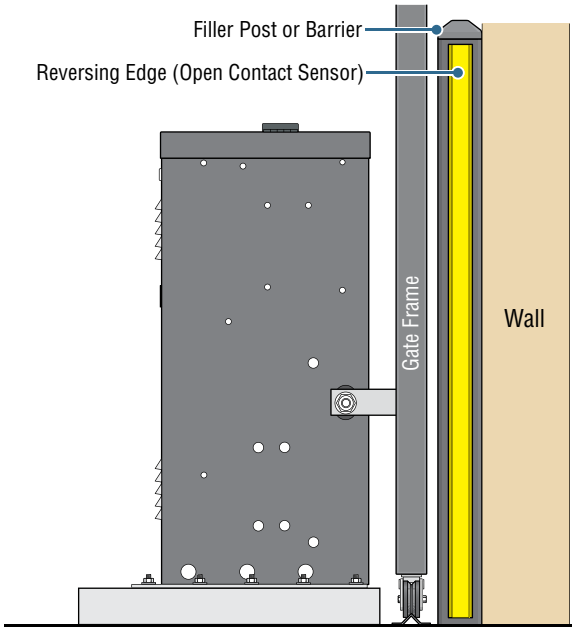

A filler post or barrier may need to be installed between the gate and wall area to reduce the distance to 2 1/4" **or less**. A reversing edge should be installed on the post or barrier for safety (See page 4 for more information).

Photo Sensors (With Filler Post and Reverse Edge) Sample Setup

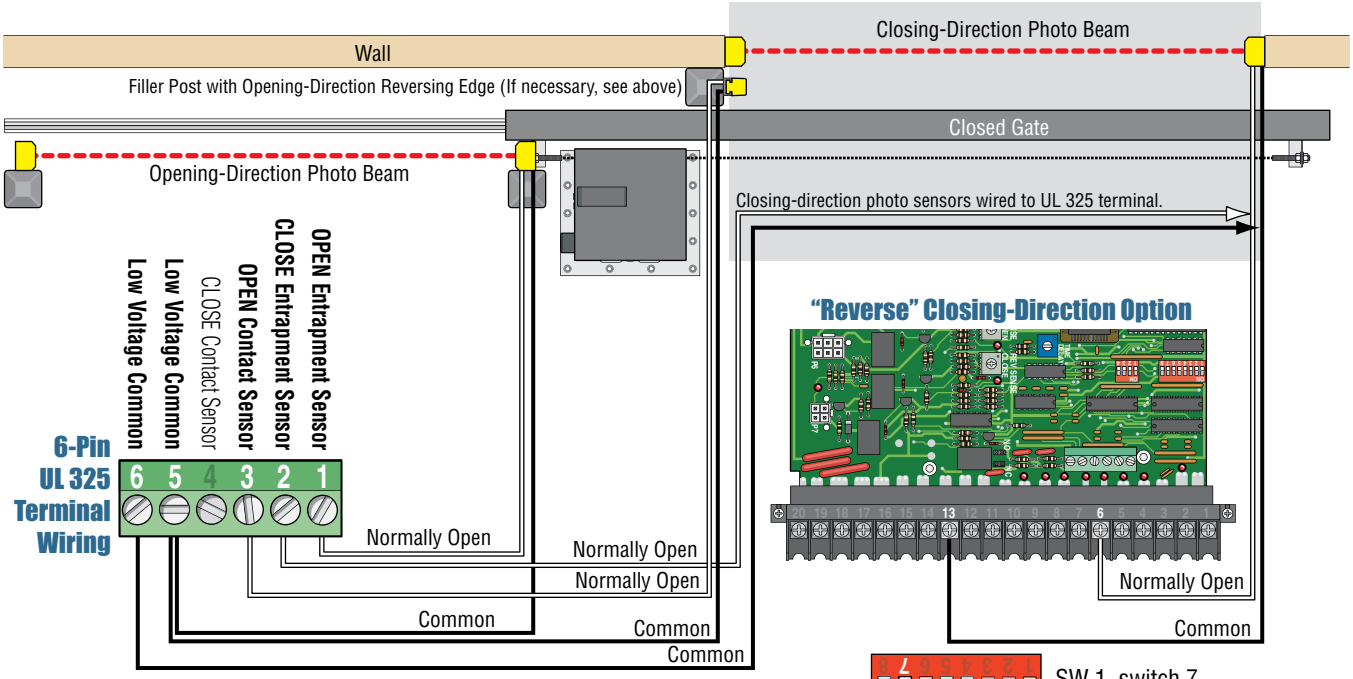

SW 1, switch 7 **MUST** be **OFF**.

IF the closing-direction photo sensor is wired to the UL 325 terminal, a closing-direction photo beam that gets obstructed will **STOP** the gate, then resume closing the gate when the obstructed photo beam has been cleared.

Photo Sensor Power Note: Photo sensors can be powered by the built-in convenience outlets located on the operator (See previous page).

IF the closing-direction photo sensor is wired to the #6 main terminal, a closing-direction photo beam that gets obstructed will **REVERSE** the gate back to the open position.

Wireless Reverse Edge Sample Setup - Single Receiver

Filler Post Note: Install reversing edges on all the gate support posts or filler post in this area (e.g. cantilever gate installations, See below).

Normally Open
Edge Transmitter
9 V battery operated transmitter mounted on gate.
Normally Open
Common
Wall
Opening-Direction Reversing Edge
Filler Post (If necessary)
Opening-Direction Reversing Edge (If filler post is used).
Closed Gate
Closing-Direction Reversing Edge

Low Voltage Common
Low Voltage Common
CLOSE Contact Sensor
OPEN Contact Sensor
CLOSE Entrapment Sensor
OPEN Entrapment Sensor

6 5 4 3 2 1
6-Pin UL 325 Terminal Wiring

Antenna mounted outside operator cover.
Normally Open
Install Jumper Wire
Normally Open
Common
Common
Coax Antenna Kit P/N 1514-073
24 VAC Receiver
Place receiver in operator.

When either direction reversing edge get obstructed, the gate will **STOP** and reverse direction.

20 19 18 17 16 15 14 13 12 11 10 9 8 7 6 5 4 3 2 1
20-Pin Main Terminal
To #1 Com
To #3 24 Volt - Power is limited to 250 mamps.

Wireless Note: Refer to the instruction sheet that comes with the receiver/transmitter for more specific wiring and mounting instructions.

Photo Sensor and Wireless Reverse Edge Sample Setup

Photo Sensor Power Note: Photo sensors can be powered by the built-in convenience outlets located on the operator (See page 25).

Install Opening-Direction reverse edges on the gate support post(s) in this area.
Closing-Direction Reversing Edge
Cantilever Gate
Opening-Direction Photo Beam

Low Voltage Common
Low Voltage Common
CLOSE Contact Sensor
OPEN Contact Sensor
CLOSE Entrapment Sensor
OPEN Entrapment Sensor
Normally Open

9 V battery operated transmitter mounted on gate.
Edge Transmitter

6 5 4 3 2 1
6-Pin UL 325 Terminal Wiring

20 19 18 17 16 15 14 13 12 11 10 9 8 7 6 5 4 3 2 1
20-Pin Main Terminal

Normally Open
To #3 24 Volt - Power is limited to 250 mamps.
Common
Common
To #1 Com
Antenna mounted outside operator cover.
Coax Antenna Kit P/N 1514-073
24 VAC Receiver
Place receiver in operator.
Normally Open
Common

When a reversing edge gets obstructed, the gate will **STOP** and reverse direction. When a photo beam gets obstructed the gate will **STOP**, then continue in the same direction after obstructed photo beam has been cleared until the gate cycle is complete.

Wireless Note: Refer to the instruction sheet that comes with the receiver/transmitter for more specific wiring and mounting instructions.

4.3 Loop Detector Wiring

To help protect the operator from accidentally closing on vehicles in the gate's path, DoorKing highly recommends that loops and loop detectors be installed. Loops are laid underneath, cut into asphalt or concrete driveways or buried beneath gravel and earth driveways. A loop detection system will sense a vehicle like a metal detector and send a signal to the gate operator preventing the gate from automatically opening or closing on a vehicle when it is in the gate's path. DoorKing recommends that a licensed installer perform this work.

DoorKing offers a free "**Loop and Loop-Detectors Information Manual**" PDF located at DoorKing's web site for more information. www.dkaccess.com

Reverse Loops

Reverse loops are placed on each side of the gate to prevent the gate from closing on a vehicle in the gate's path. They will stop or reverse the cycling of the gate while a vehicle is in or near the gate's pathway.

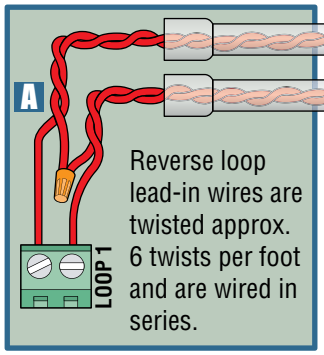

Reverse loop lead-in wires are twisted approx. 6 twists per foot and are wired in series.

Note: SW 1, switch 7 **must** be set for the reverse loops. See page 21 for more information about SW 1, switch 7 ON/OFF options.

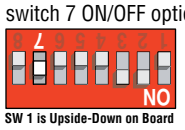

SW 1 is Upside-Down on Board

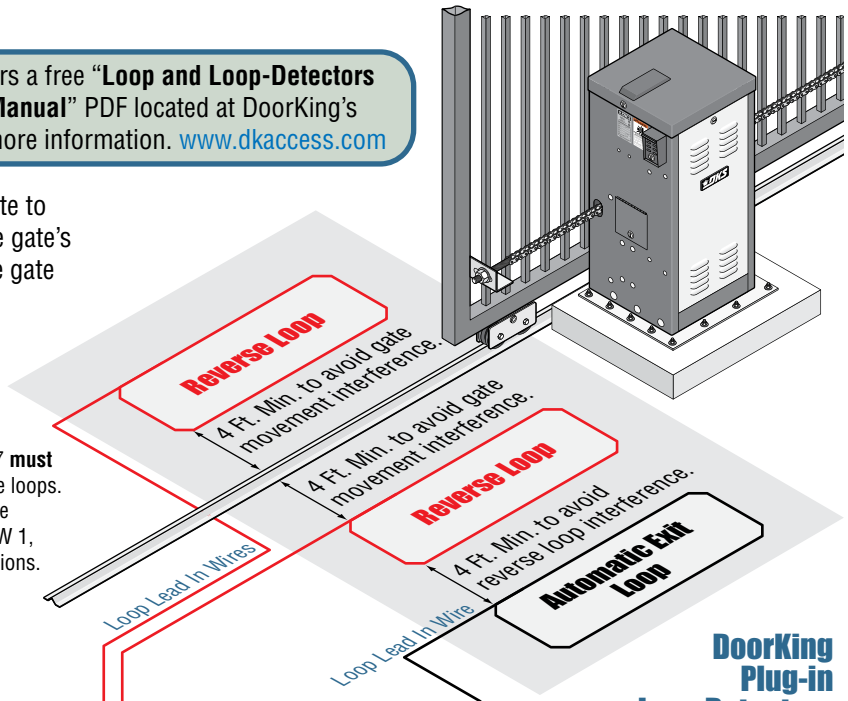

Automatic Exit Loop

Automatically opens the gate for exiting vehicles without having to use a transmitter or keypad. The exit loop can be placed a minimum of 4 feet away from the reverse loop or far enough away from the gate so the gate has started opening or even completely opened by the time you drive up to it (Free exit).

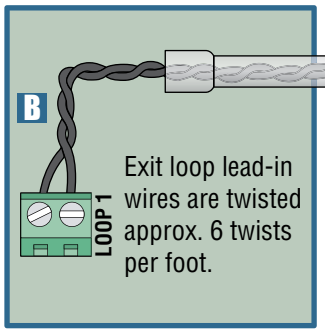

Exit loop lead-in wires are twisted approx. 6 twists per foot.

SW 1, switch 3 must be **ON** to **FULLY** open gate (Normal function).

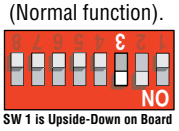

SW 1 is Upside-Down on Board

Note: The plug-in exit loop detector can be wired to **partially open** the gate if SW 1, switch 3 is turned **OFF**. A jumper wire must be connected from terminal #4 to terminal #5 (See next page for more information).

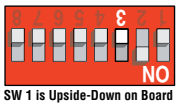

SW 1 is Upside-Down on Board

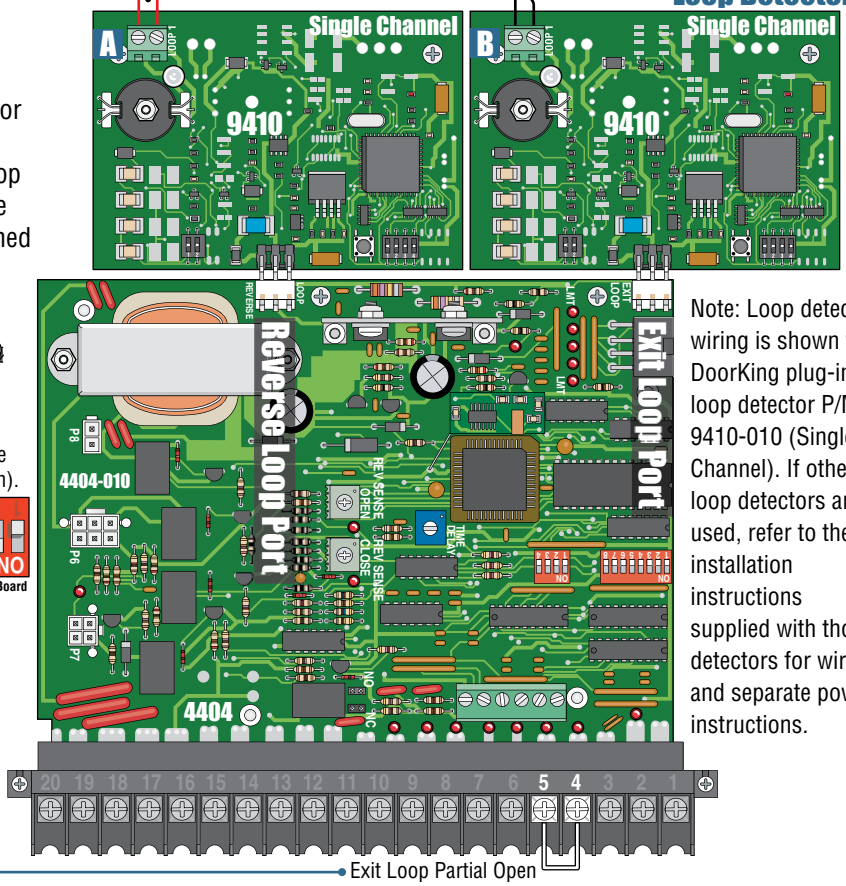

Note: Loop detector wiring is shown for DoorKing plug-in loop detector P/N 9410-010 (Single Channel). If other loop detectors are used, refer to the installation instructions supplied with those detectors for wiring and separate power instructions.

SECTION 5 - MAIN TERMINAL WIRING

5.1 Main Terminal Description

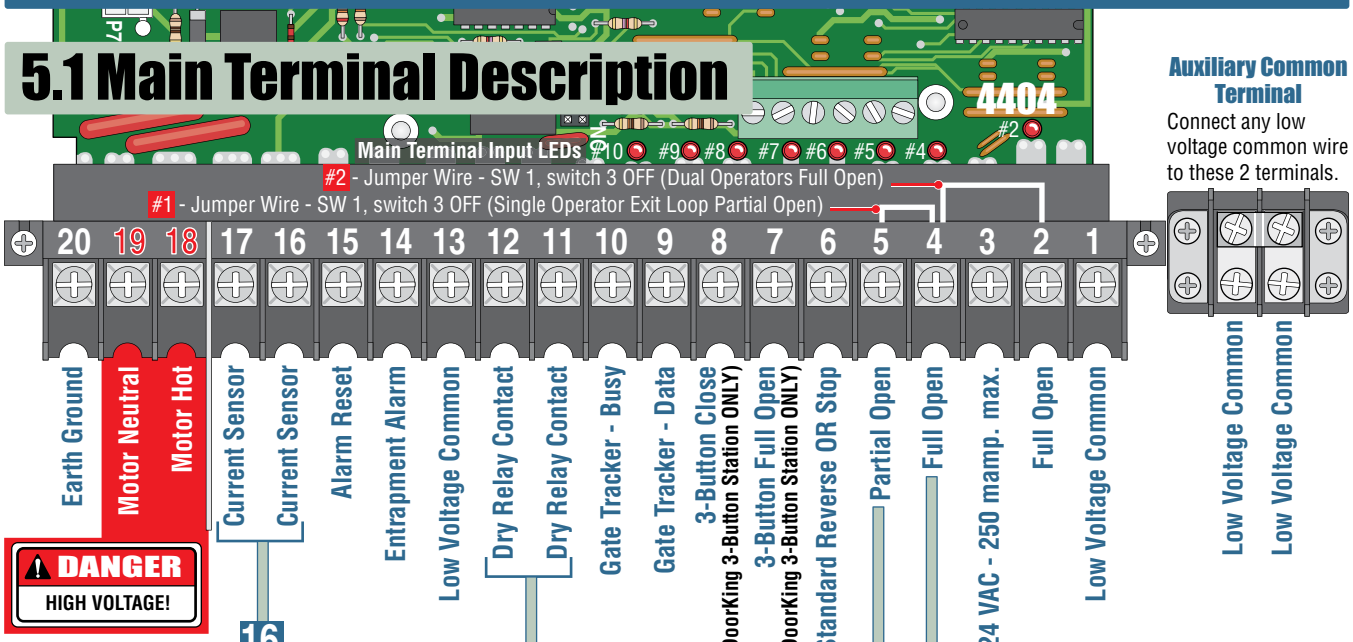

Auxiliary Common Terminal

Connect any low voltage common wire to these 2 terminals.

DANGER
HIGH VOLTAGE!

16
17

Used in conjunction with the circuit board inherent reversing sensors. See page 23 for further information.

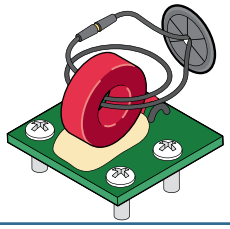

Main Terminal Input LEDs Note: The LED that is above the main terminal wiring input will light when that terminal input gets activated.

4

- SW 1, switch 3 is **ON**, terminal #4 functions as a normal **FULL** open input. (Normal Setting). **Single operator use ONLY**.
- SW 1, switch 3 is **OFF**, input to terminal #4 becomes the output from a plug-in loop detector installed in the **EXIT loop port** of the circuit board. A jumper wire is needed to open and close the gate(s) for these applications:

SW 1 is Upside-Down on Board

#1 Terminal #4 jumpered to terminal #5 will **PARTIALLY** open an automatic exit loop using a **single channel** plug-in loop detector installed in the exit loop port when using a single gate operator.

#2 Terminal #4 jumpered to terminal #2 will **FULLY** open bi-parting gates using a **dual channel** plug-in loop detector installed in the exit loop port when using dual gate operators.

5

For long gate applications. An input device connected to terminal #5 will open the gate to the partial open setting, See page 22 for more information.

11
12

Operation of relay is dependent on setting of SW 1, switches 4 and 5. See page 20 and 21 for DIP-switch function descriptions.

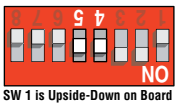

SW 1 is Upside-Down on Board

Relay contacts can be set for Normally Open (NO) or Normally Closed (NC) operation.
Contact rating is 1 amp maximum at 24-volts DC.

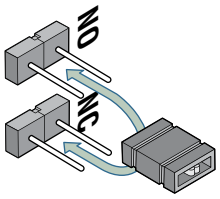

6

This input ONLY fuctions when gate is **fully opened** or in the **closing cycle**.

- When gate is closing: SW 1, **switch 7** is **OFF,** an input to terminal #6 (eg: photo beam gets obstructed) will **reverse** and open the gate.

Note: If the auto-close timer is **ON**, when gate reaches the open position, timer will time out and close the gate.

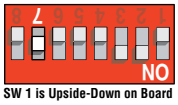

SW 1 is Upside-Down on Board

- When gate is closing: SW 1, **switch 7** is **ON,** an input to terminal #6 (eg: photo beam gets obstructed) will **stop** the gate, then continue to close the gate when input is clear (Used to help prevent tailgating vehicles from unauthorized enrty). See page 21 for more information.

5.2 Control Wiring for Single/Primary Operator

Important: Controls intended for user activation must be located at least six (6) feet away from any moving part of the gate and where the user is prevented from reaching over, under, around or through the gate to operate the controls.

Emergency access controls only accessible by authorized personnel (e.g., fire, police, EMS) may be placed at any location in the line-of-sight of the gate.

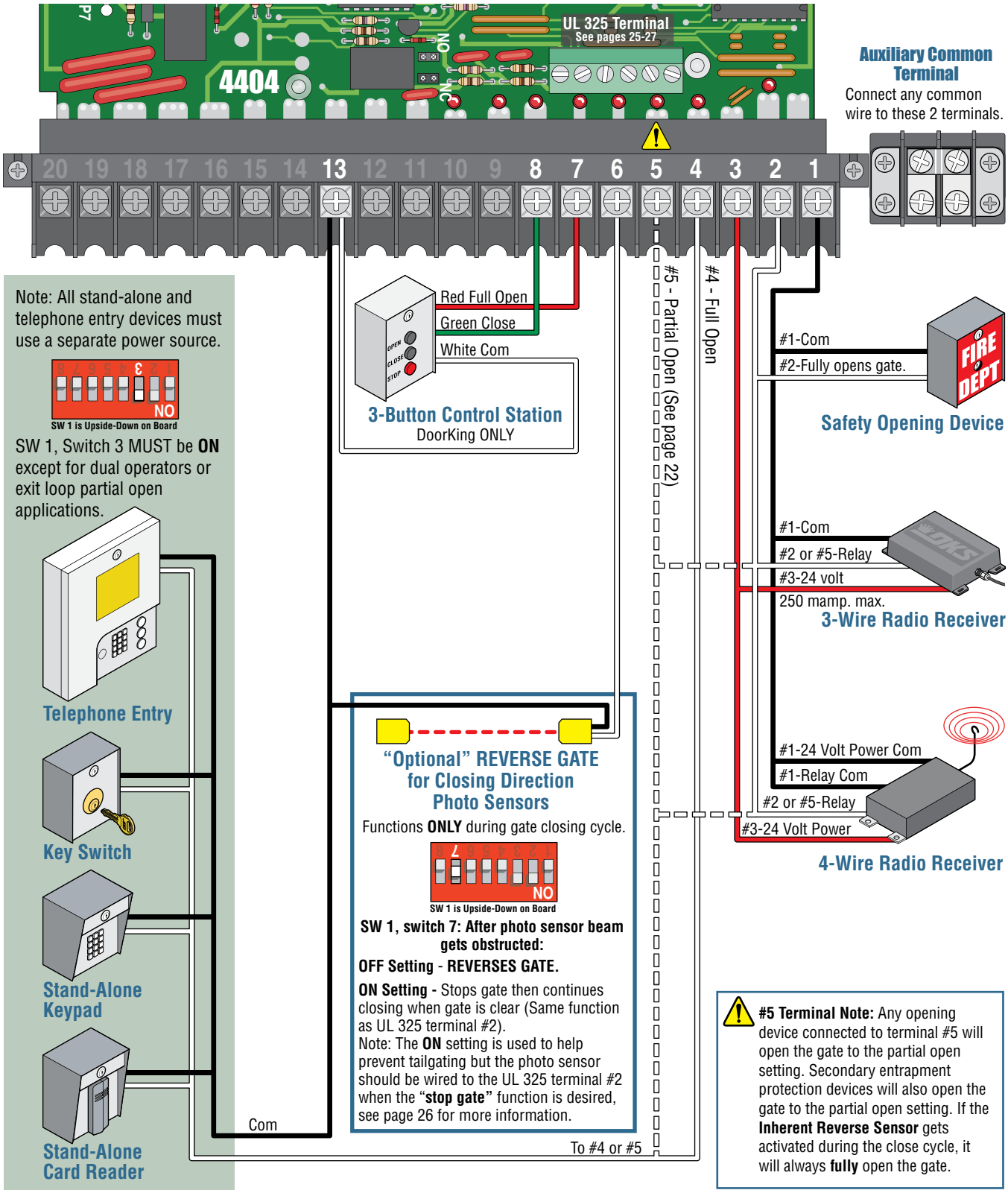

5.3 Auxiliary Device Wiring

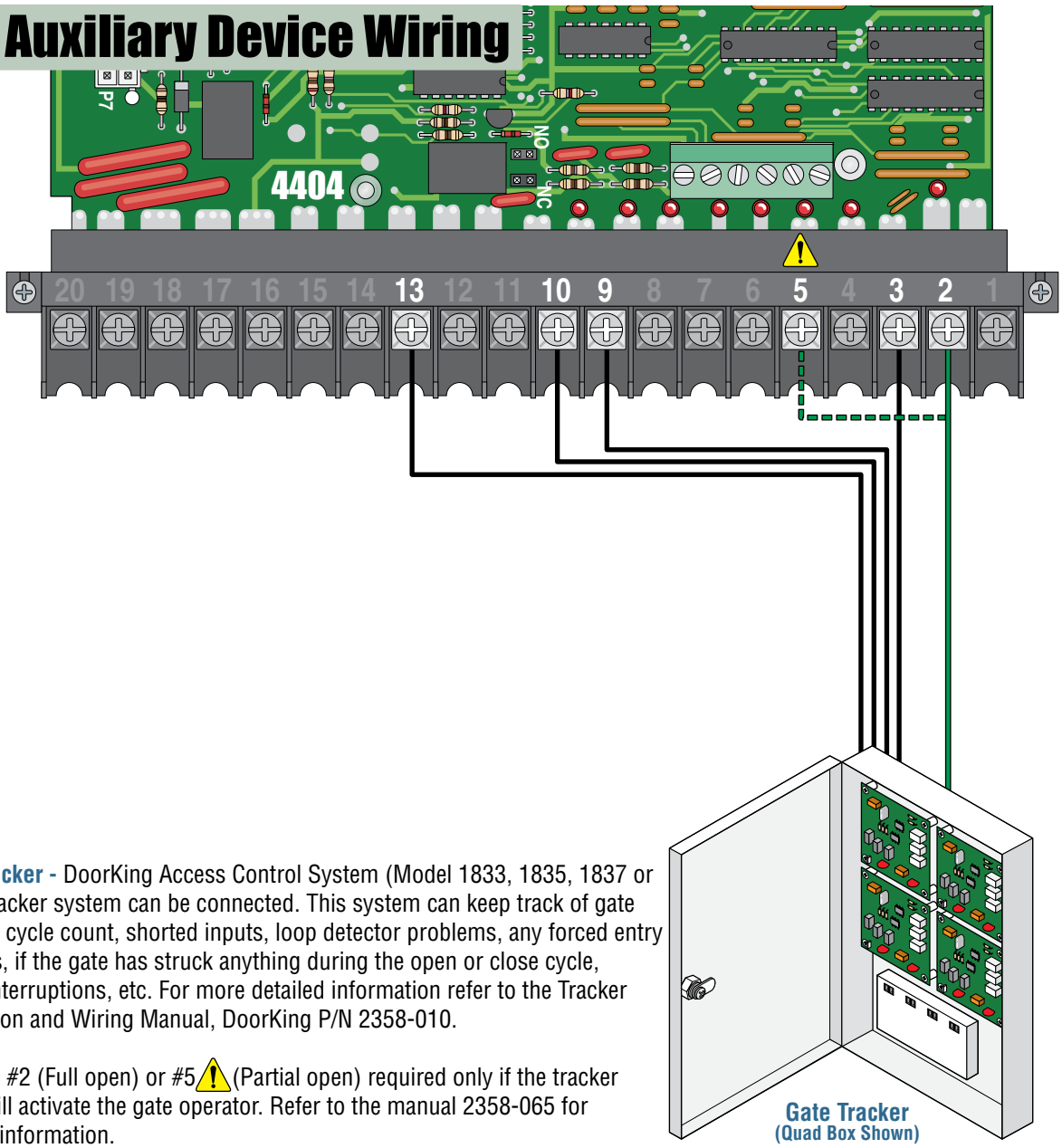

Gate Tracker - DoorKing Access Control System (Model 1833, 1835, 1837 or 1838) tracker system can be connected. This system can keep track of gate operator cycle count, shorted inputs, loop detector problems, any forced entry attempts, if the gate has struck anything during the open or close cycle, power interruptions, etc. For more detailed information refer to the Tracker Installation and Wiring Manual, DoorKing P/N 2358-010.

Terminal #2 (Full open) or #5 ⚠ (Partial open) required only if the tracker board will activate the gate operator. Refer to the manual 2358-065 for detailed information.

5.4 Bi-Parting Gates Wiring - Dual Gate Operators

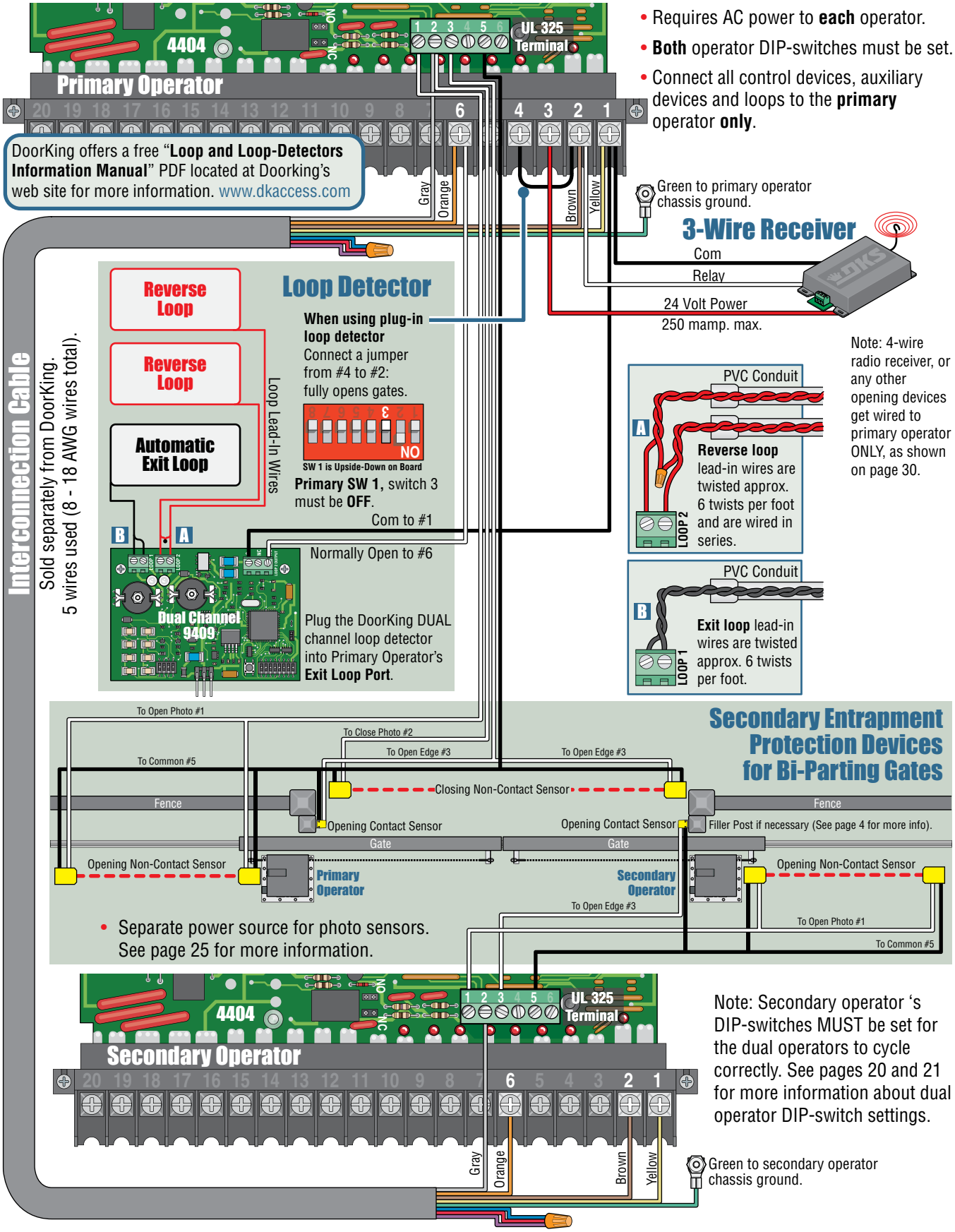

- Requires AC power to **each** operator.
- **Both** operator DIP-switches must be set.
- Connect all control devices, auxiliary devices and loops to the **primary** operator **only**.

DoorKing offers a free "**Loop and Loop-Detectors Information Manual**" PDF located at Doorking's web site for more information. www.dkaccess.com

- Separate power source for photo sensors. See page 25 for more information.

Note: Secondary operator 's DIP-switches MUST be set for the dual operators to cycle correctly. See pages 20 and 21 for more information about dual operator DIP-switch settings.

SECTION 6 - OPERATING INSTRUCTIONS

IMPORTANT SAFETY INSTRUCTIONS

WARNING - *To reduce the risk of injury or death:*

1. READ AND FOLLOW ALL INSTRUCTIONS.
2. Never let children operate or play with gate controls. Keep the remote control away from children.
3. Always keep people and objects away from gate. **NO ONE SHOULD CROSS THE PATH OF THE MOVING GATE**.
4. Test the operator monthly. The gate MUST reverse on contact with a rigid object or stop or reverse when an object activates the non-contact sensors. After adjusting the force or the limit of travel, retest the gate operator. Failure to adjust and retest the gate operator properly can increase the risk of injury or death.
5. Use the emergency release only when the gate is not moving and power has been shut-off.
6. KEEP GATES PROPERLY MAINTAINED. Read the owner's manual. Have a qualified service person make repairs to gate hardware.
7. The entrance is for vehicles only. Pedestrians must use separate entrance.
8. **SAVE THESE INSTRUCTIONS**.

6.1 AC Power and Reset Button(s)

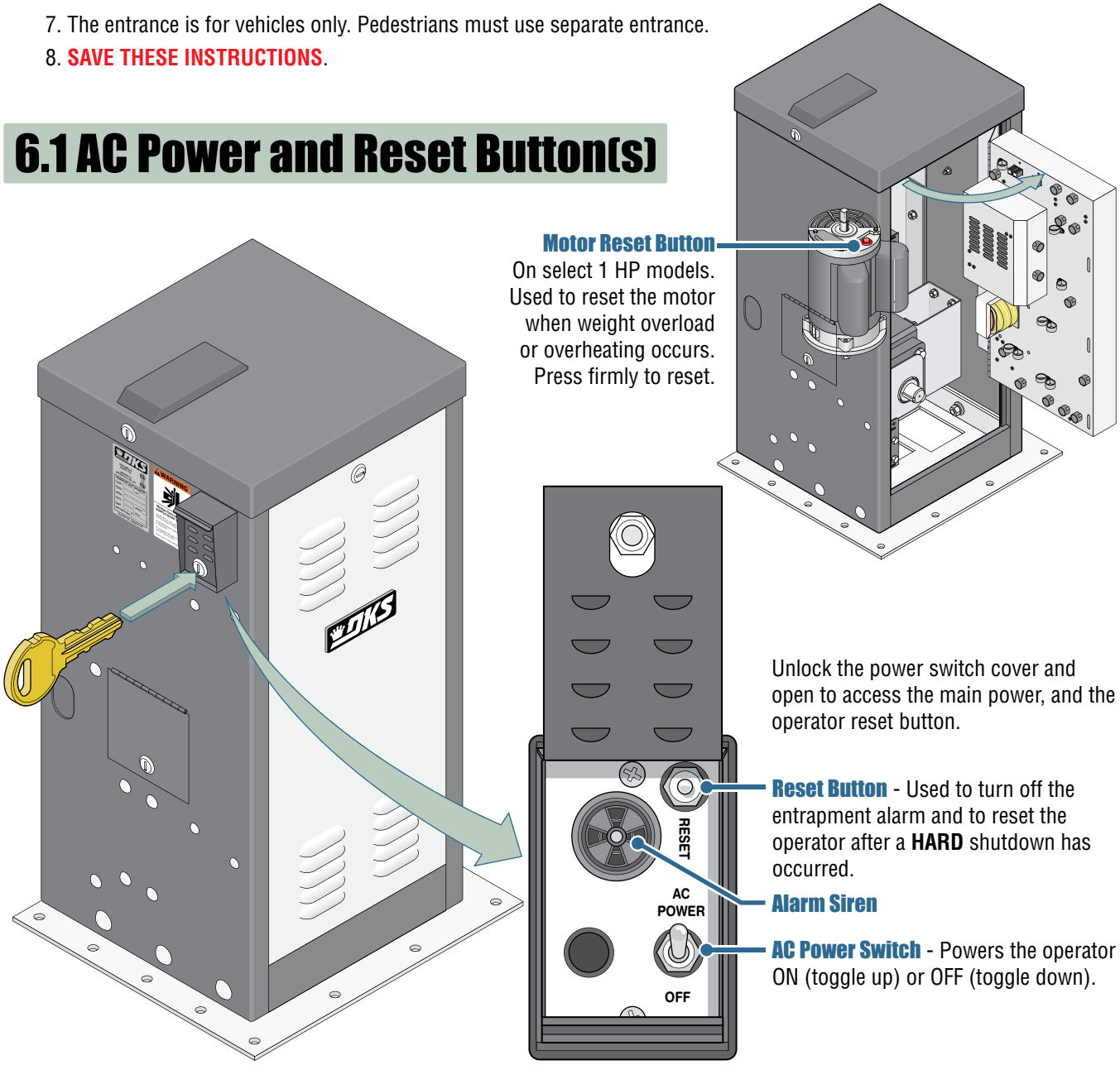

Unlock the power switch cover and open to access the main power, and the operator reset button.

Reset Button - Used to turn off the entrapment alarm and to reset the operator after a **HARD** shutdown has occurred.

Alarm Siren

AC Power Switch - Powers the operator ON (toggle up) or OFF (toggle down).

6.2 Shutdown Conditions

Under various entrapment conditions the operator will assume either a **soft** or **hard (alarm)** shutdown. To determine what type of reset action is required, you will need to understand how the different entrapment conditions affect the gate operator.

Soft Shutdown

This occurs in various situations where the inherent or secondary entrapment protection devices have been activated. In a soft shutdown condition, the operator **will not** respond to any input that was present when the entrapment protection device sensed an obstruction. If the gate stops at the open position, the operator will not respond to the automatic close timer.

- **Example 1** - A time clock keys the gate open in the morning and an entrapment protection device senses an obstruction prior to the gate reaching the full open position. If the entrapment is sensed by the inherent system, the gate will reverse and run back to the closed position. The time clock input is still present, but the gate will not re-open.

Note: In some systems, the time clock input comes from the telephone entry system relay. This same relay may also provide open commands for a card reader, MicroPLUS transmitters and the visitor telephone entry. If so, these devices will also be disabled in a soft shutdown condition.

- **Example 2** - If the gate is closing and an entrapment protection device is activated, the gate will either stop or reverse and run back to the open position, depending upon if the secondary or inherent device was activated. The automatic close timer will not close the gate.
- **Example 3** - Vehicle arrives at exit loop and gate runs towards the open position. If the inherent entrapment protection gets activated during this opening cycle, the gate reverses and runs back to the closed position. After the inherent entrapment protection is cleared, If the vehicle is still present at the exit loop, a soft shutdown condition does not occur. The exit loop input provides an immediate reset of the operator and the gate will again run to the open position.

Resetting a Soft Shutdown

In some conditions, a soft shutdown will reset as soon as the entrapment condition clears. For example, if a non-contact sensor (photo cell) is sensing an obstruction, the operator will stop the gate and assume a soft shutdown condition. When the photocell clears, the operator will return to normal operation.

When the operator is in a soft shutdown, activation of any “intended input” will reset the operator. An “ intended input” includes any command, any standard safety input and any loop input. Activating any of these inputs will reset the gate. At that point the gate will return to normal operation. If the gate is open, the automatic close timer will then time out and close the gate.

Hard Shutdown (Alarm Activated)

A hard shutdown condition occurs when: (1.) The inherent entrapment protection system (Type A) gets activated TWO consecutive times before the gate completes the open or close cycle. (2.) The reversing edge (Type B2) gets activated and reverses but before the gate completes the reverse cycle the inherent entrapment protection system (Type A) gets activated.

- **Example of a Hard Shutdown** - The gate is closing and the inherent entrapment protection system senses an obstruction and causes the gate to reverse direction. As the gate begins to run in the open direction, a second obstruction is sensed prior to the gate reaching the full open position. Once the second obstruction has been sensed, the operator will stop, **the audio alarm will sound and all standard inputs are shut down** (including open commands, safety commands, loop inputs, etc.).
  - **To silence the alarm**, press the reset button or after 5 minutes, the audio alarm will shut off but will “chirp” every 5 seconds. This indicates that the operator is in a hard shutdown condition (The reset button must be pressed to reset the operator and stop the alarm “chirping”).

Resetting a Hard Shutdown

The operator is in a hard shutdown condition when the audio alarm is sounding OR “chirping” every 5 seconds.

- Before resetting a hard shutdown, determine why the shutdown occurred. Inspect the gate for any obstructions along its path that could have activated the inherent entrapment sensing system. Inspect the gate and gate hardware.

The audio alarm will sound for five minutes, or until the operator’s reset button is pushed. After (5) five minutes the alarm will “chirp every 5 sec.” and the hard shutdown condition will remain in affect until the reset button is pushed.

Once the operator has been reset, an open or close command is needed to start the gate operator. Most activating commands will cause the gate operator to cycle to the open position. This includes activation of a key switch or open command and activation of an automatic exit loop. Activation of a close command will run the gate to the closed position.

Note: DoorKing operators have a built-in alarm reset push button mounted on the operator (See previous page for reset button location). Activating this button will return the gate operator to normal operation, but will not cycle the gate operator.

6.3 Manual Gate Operation

Caution: Never attempt to manually operate any gate until you have verified that power to the operator has been shut-off.

2 Manual Crank

Insert the supplied manual hand crank into the access hole until it engages with the motor shaft. Turn the crank to open the gate. 9235 mechanical disc brake model operators **MUST** also have the disc brake manually released before manually cranking the hand crank (See below).

1 Unlock Manual Crank Access Panel

Cuts off AC power to the operator.

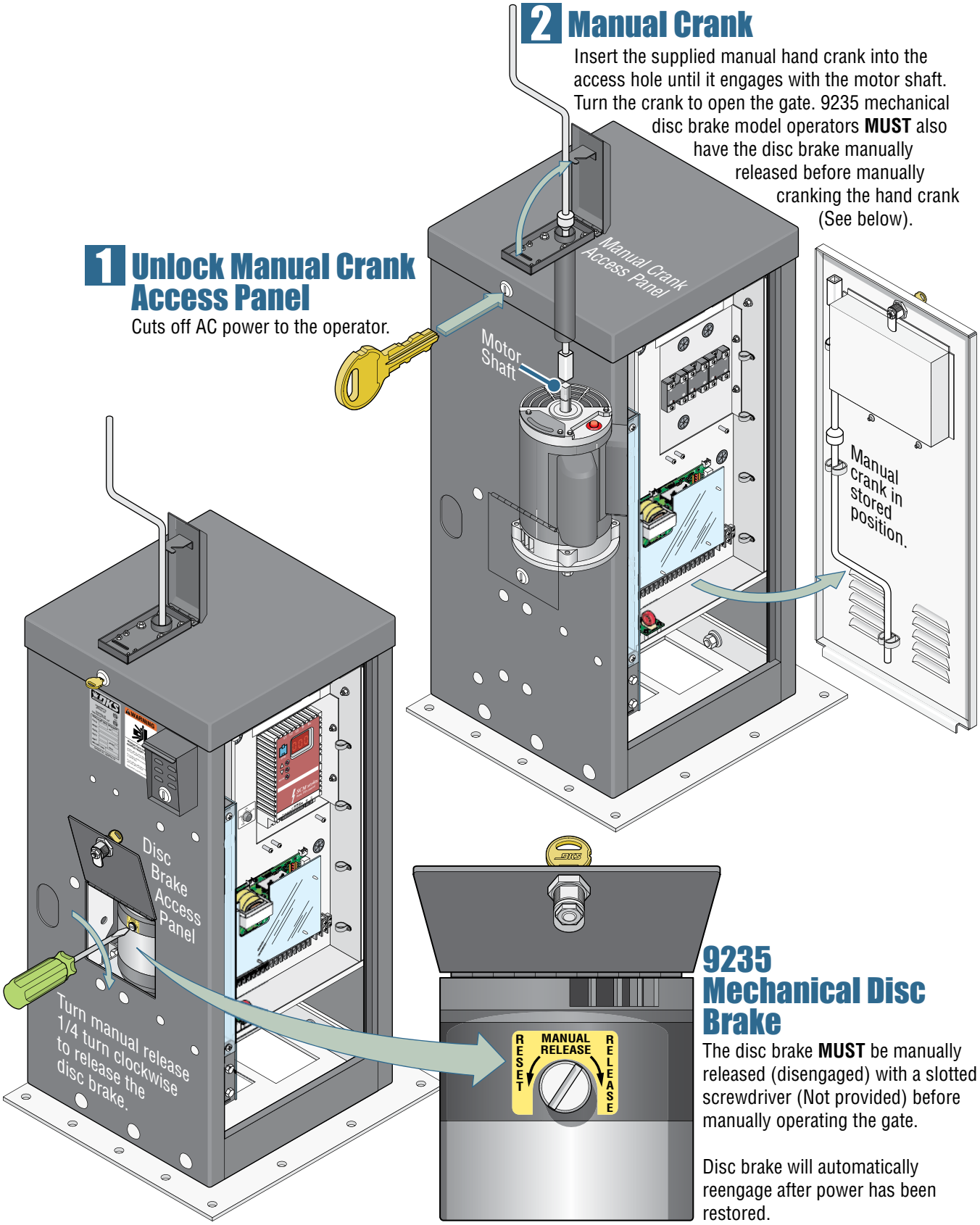

9235 Mechanical Disc Brake

The disc brake **MUST** be manually released (disengaged) with a slotted screwdriver (Not provided) before manually operating the gate.

Disc brake will automatically reengage after power has been restored.

SECTION 7 - MAINTENANCE AND TROUBLESHOOTING

Inspection and service of this gate operator by a qualified technician should be performed anytime a malfunction is observed or suspected. High cycle usage may require more frequent service checks.

7.1 Maintenance

When servicing the gate operator, always check any secondary (external) reversing devices (loops, photocells, etc.) for proper operation. If external reversing devices cannot be made operable, do not place this operator in service until the malfunction can be identified and corrected.

Always check the inherent reversing system when performing any maintenance. If the inherent reversing system cannot be made operable, remove this operator from service until the cause of the malfunction is identified and corrected. Keeping this operator in service when the inherent reversing system is malfunctioning creates a hazard for persons which can result in serious injury or death should they become entrapped in the gate.

When servicing this gate operator, always turn power **OFF!!**

If gearbox requires oil, use only Mobil SHC-629 Synthetic Gear Oil. Do not completely fill gearbox with oil. Gearbox should be half full only. Do not exceed this level.

Operator Component	Maintenance	Monthly Interval		
		3	6	12
Alarm	Activate the primary (inherent) reverse system by blocking the gate with a solid object. When the gate reverses, block the gate in the opposite direction prior to the limit being reached. The entrapment alarm should activate. Press the reset button to silence the alarm.	✓		
Chain	Check for sagging. Tighten if necessary.		✓	
Fire Dept.	Check emergency vehicle access device for proper operation.	✓		
Gate	Inspect for damage. Check gate wheels. rollers and guides for wear and grease if necessary.		✓	
Grease	Wheels and guide rollers if necessary.		✓	
Loop(s)	Check vehicular exit and reverse loops for proper operation.	✓		
Primary Reverse System	Check that the gate reverses on contact with an object in both the opening and closing cycles. Adjust the reversing sensor if necessary.	✓		
Release	Check manual release for proper operation.	✓		
Secondary Reverse Device	Check secondary (external) reverse device(s) stop or reverse the gate when activated.	✓		
Sprockets	Check set screws for tightness.		✓	
Complete System	Complete check of gate and gate operating system.			✓

7.2 Built-In Diagnostic Tests

This gate operator is designed with built-in diagnostics that will alert you to potential or existing problems that the microprocessor has detected. Specific fault conditions are checked and the operator will signal that a fault exist through the built-in alarm.

Constant alarm is heard when power is applied: This indicates that the limit switch wire harness is not connected to the circuit board. In this condition, the operator will not run and the tone will continue until the fault is corrected. Check to be sure that the limit switch plug is properly inserted into the limit switch plug on the circuit board.

Constant alarm is heard: This indicates that the operator is in a hard shutdown condition (section 6.2 on page 34). The tone will continue to sound for five minutes, and then will beep once every five seconds. The operator-reset button must be pressed or power must be removed and then reapplied to return the operator to normal operation.

Short "chirp" is heard every five seconds: This indicates that the operator has been in a hard shutdown condition in excess of five minutes. This will continue until the operator-reset button is pressed or until power is removed from the operator (section 6.2 on page 34).

Operator runs for 1 second and stops, two short "chirps" are heard: This indicates that there may be a fault with the current sensor circuit.

7.3 Troubleshooting

Have a good VOM meter to check voltages and continuity. A Meg-Ohm meter capable of checking up to 500 meg-ohms of resistance is necessary to properly check the integrity of the ground loops. When a malfunction occurs, isolate the problem to one of three areas: **1.** the operator, **2.** the loop system, **3.** the keying devices. **Use caution when checking high voltage terminals, motor capacitor and the motor.**

1. Check the input indicator LEDs. They should only come ON when a keying device (card reader, push button, etc.) is activated. If any of the input LEDs are ON continuously, this will cause the gate operator to hold open. Disconnect the keying devices one at a time until the LED goes OFF.

2. Check any external secondary entrapment protection devices. Any short or malfunction in these devices can cause the gate operator to stop or to hold open.

3. A malfunction in a loop or loop detector can cause the gate operator to hold open, or to not detect a vehicle when it is present over the loop. Pull the loop detector circuit boards from the loop ports on the operator circuit board. If the malfunction persists, the problem is not with the loop system. For more information on trouble shooting loops and loop detectors, refer to your loop detector instruction sheet and to the DoorKing Loop and Loop Detector Information Manual located on DoorKing's web site.

4. Check to be sure that there are no shorted or open control wires from the keying devices to the gate operator. If a keying device fails to open the gate, press the Key Switch or momentarily jumper across terminals 1 and 4 on the operator circuit board. If the gate operator starts, this indicates that a problem exist with the keying device and is not with the gate operator.

5. If a three-button control station (open-close-stop) is connected to this gate operator, check for proper wiring. Only a DoorKing three button control station (P/N 1200-006 or 007) can be used with this gate operator. Others will cause a malfunction.

6. Check the high voltage supply. A voltage drop on the supply line (usually caused by using too small supply voltage wires) will cause the operator to malfunction. Refer to the wire size chart in section 2.1 on page 17.

Symptom	Possible Solution(s)
Operator will not run. Power LED is OFF.	• Check that AC power to the operator is turned ON. • Transformer may be overheated. Turn power off and allow board to cool for several minutes then retest. Check for low VAC power and low voltage shorts. • Check for VAC at high voltage input terminal. If voltage measures 0, check the incoming power wires or replace the circuit board.
Gate opens a short distance, then stops and reverses.	• Disconnect the gate from the gate operator and check that the gate slides freely without any binding. • Re-adjust the reverse sensitivity. • Continue troubleshooting or replace circuit board.
Gate opens but will not close.	• Check the input LEDs. Any ON will hold the gate open and indicates a problem with a keying device. • Check the secondary safety devices. Any activated will hold the gate open and indicates a problem with the safety device. • Check the loop detectors. Any activated can hold the gate open and indicates a problem with the loop detector or ground loop. • Operator may be in a "soft shutdown." Activate any keying device to determine if operator returns to normal operation. • If automatic close is desired, be sure SW 1, switch 2 is ON and set timer open from 1-23 seconds. • Bypass circuit board and check motor as above.
Gate closes but will not open.	• Operator may be in a "soft shutdown." Check input LEDs. If any are ON, momentarily disconnect, then re-connect the wire going to the respective terminal. Operator should open. • Check to be sure that the operator is running in the proper direction. Turn power OFF, and then back ON. Activate a keying device. Operator should run in the open direction. If operator runs in the close direction, turn power OFF and change direction switch SW 1, switch 1. Go to above section if operator now opens but will not close. • Be sure that the each LED on the control board lights when the keying device connected to the that terminal is activated. If LED does not light, momentarily place a jumper wire from terminal 1 to the input terminal being checked. If LED lights and gate opens, problem is with the keying device. If LED does not light, replace control board. • Bypass circuit board and check motor as described above.
Gate starts to close, then reverses to open.	• Re-adjust the reverse sensitivity. • Disconnect the gate from the gate operator and check that the gate slides freely without any binding. • Check the loop detector LEDs and input LEDs. Any that flash ON will cause the gate to reverse. • Continue troubleshooting or replace circuit board.
Gate closes then re-opens.	• Check for any input or loop detector LED's that are ON. • Check that the operator is running in the proper direction (see "gate closes but will not open").
Alarm is sounding. Operator will not run.	• Operator is in a "hard shutdown" condition. Reset button must be pushed to return operator to normal operation, see Section 6.2 Shutdown Conditions, page 34. • Check the gate and gate hardware for any binding, correct where necessary. • Gate may be too heavy.
Alarm chirps once every 5 seconds. Operator will not run.	• Operator has been in a "hard shutdown" condition in excess of 5 minutes. Reset button must be pushed to return operator to normal operation, see Section 6.2 Shutdown Conditions, page 34.
Alarm sounds when power is applied and operator will not run.	• The limit switch wire harness is not plugged into the circuit board. Check that the limit switch connector is properly plugged into the limit switch plug on the circuit board.
Operator runs for 1 second and stops, two short chirps are heard.	• There may be a problem with the current sensor on the circuit board. Replace the circuit board.

7.4 Accessory Items

The following accessory items are available for the series 9200 slide gate operators.

Contact Sensors - For use as a secondary entrapment protection device. Miller Edge, Inc., MGO20, MGR20, MGS20

Chain Tray Kit - 10 Ft. section. Sections connect together to fit any length gate. P/N 2601-270

Pedestal Mounting Stand - Heavy-duty pedestal mounting stand for the 9200 series operator. P/N 9200-135

Heater and Fan Kit - Recommended for cold weather climates.
P/N 1601-195: **115 VAC models** P/N 1601-197: **208/230 VAC models**

Photo Cell - Non-contact (photocell) sensors for use as a secondary entrapment protection device.
MMTC, Inc. Model 60-278 - P/N 8080-011
Carlo Gavazzi Type PMP12 - P/N 8080-030
Carlo Gavazzi Type PMT - P/N 8080-031
Note: **DO NOT USE** MMTC, Inc. Model IR55 - P/N 8080-010 for the 9200 series slide gate operator.

Loop Detector - Detectors plug directly into ports on circuit board simplifying wiring.
Single channel detector - P/N 9410-010 Dual channel detector - P/N 9409-010

Loop Wire - 18 AWG loop wire with XLPE insulation is ideal for ground loops. Available in 500 and 1000 foot rolls. Red, blue or black insulation.

Pre-Fab Loops - Prefabricated ground loops. 24-foot circumference with 50-foot lead-in. Available in yellow, red or blue jackets. Not for use in asphalt roadways.

Loop Test Meter - Meg-ohm meter checks the integrity of ground loops. P/N 9401-045

3-Button Control Station - Provides open-close-stop manual operation of the gate.
Stand Alone Box - P/N 1200-006 Interior (fits in single gang box) - P/N 1200-007

Interconnection Cable - Interconnect wire cable contains all the necessary wires to interconnect primary / secondary operators.
Cable length: 30 ft. - P/N 2600-755 40 ft. - P/N 2600-756 50 ft. - P/N 2600-757

Time Clock - 7 day and 365 day time clocks can be used to automatically open gate at pre-set time and days. Compact clock fits inside the operator. 7 day clock - P/N 2600-791 365 day clock - P/N 2600-795

V-Wheels - 4 inch and 6 inch. UHMW or Steel. Roller bearings or sleeve bearings. Single or tandem wheel configurations.

Surge Devices - High and low voltage surge suppressors help prevent circuit board failure caused by lightning strikes and power surges. High Voltage - P/N 1876-010 Low Voltage - P/N 1878-010

Speed Bumps - Prefabricated six-foot speed bump reduces traffic speed through gate system. P/N 1610-150

Model 9210 1 HP 1-Phase 115 VAC

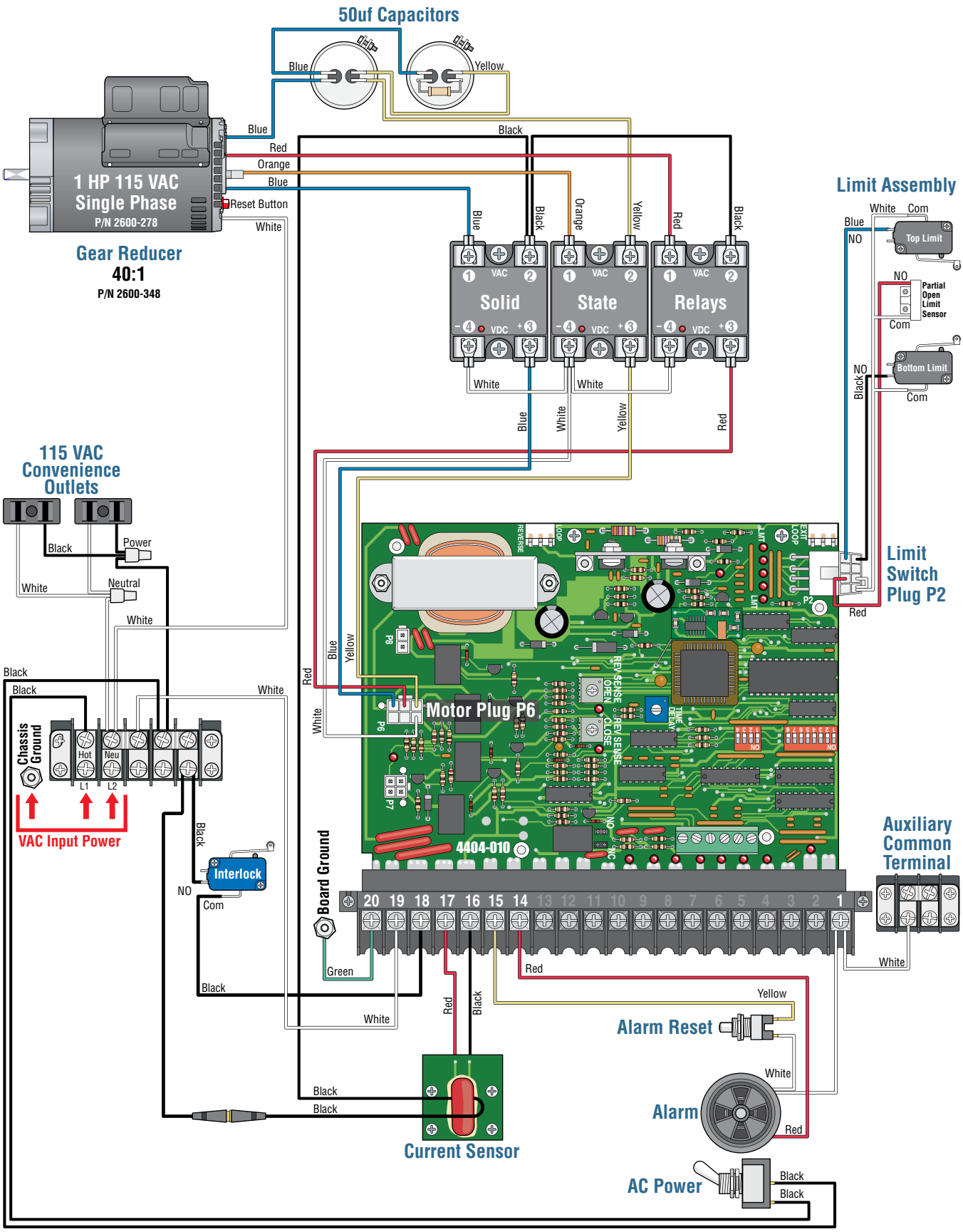

Model 9210 1 HP 1-Phase 208/230 VAC

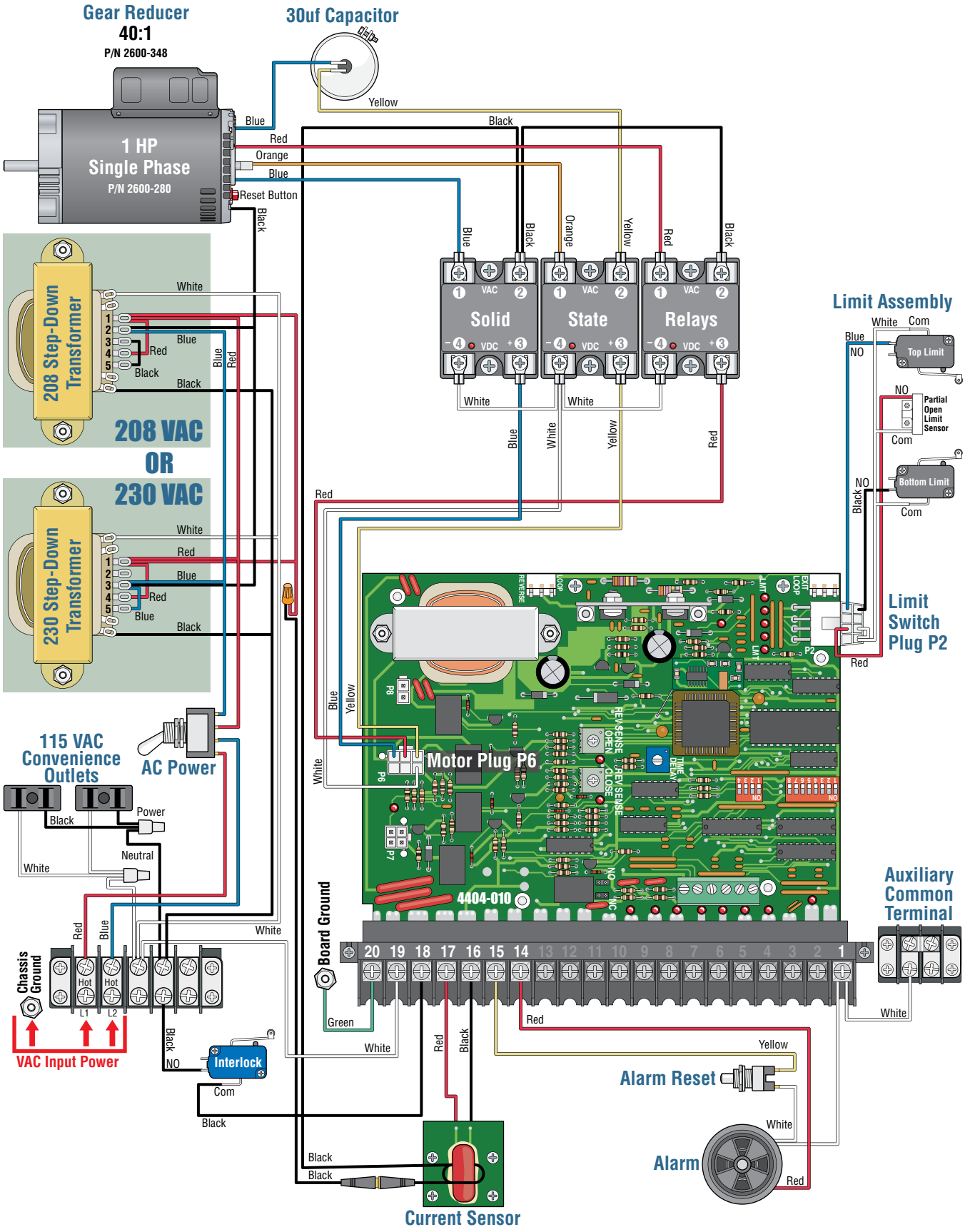

Model 9210 1 HP 3-Phase 208/230 VAC

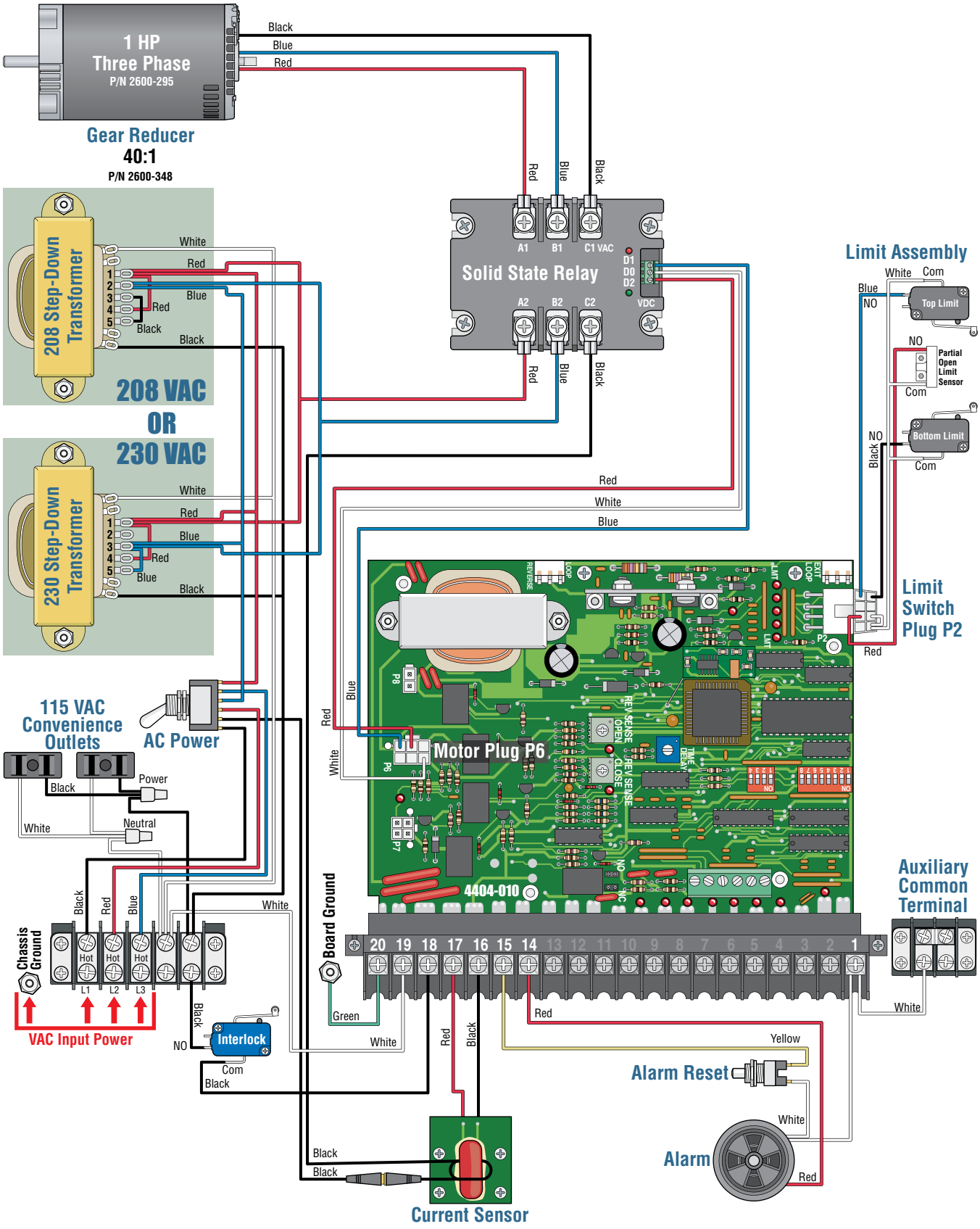

Model 9210 1 HP 3-Phase 460 VAC

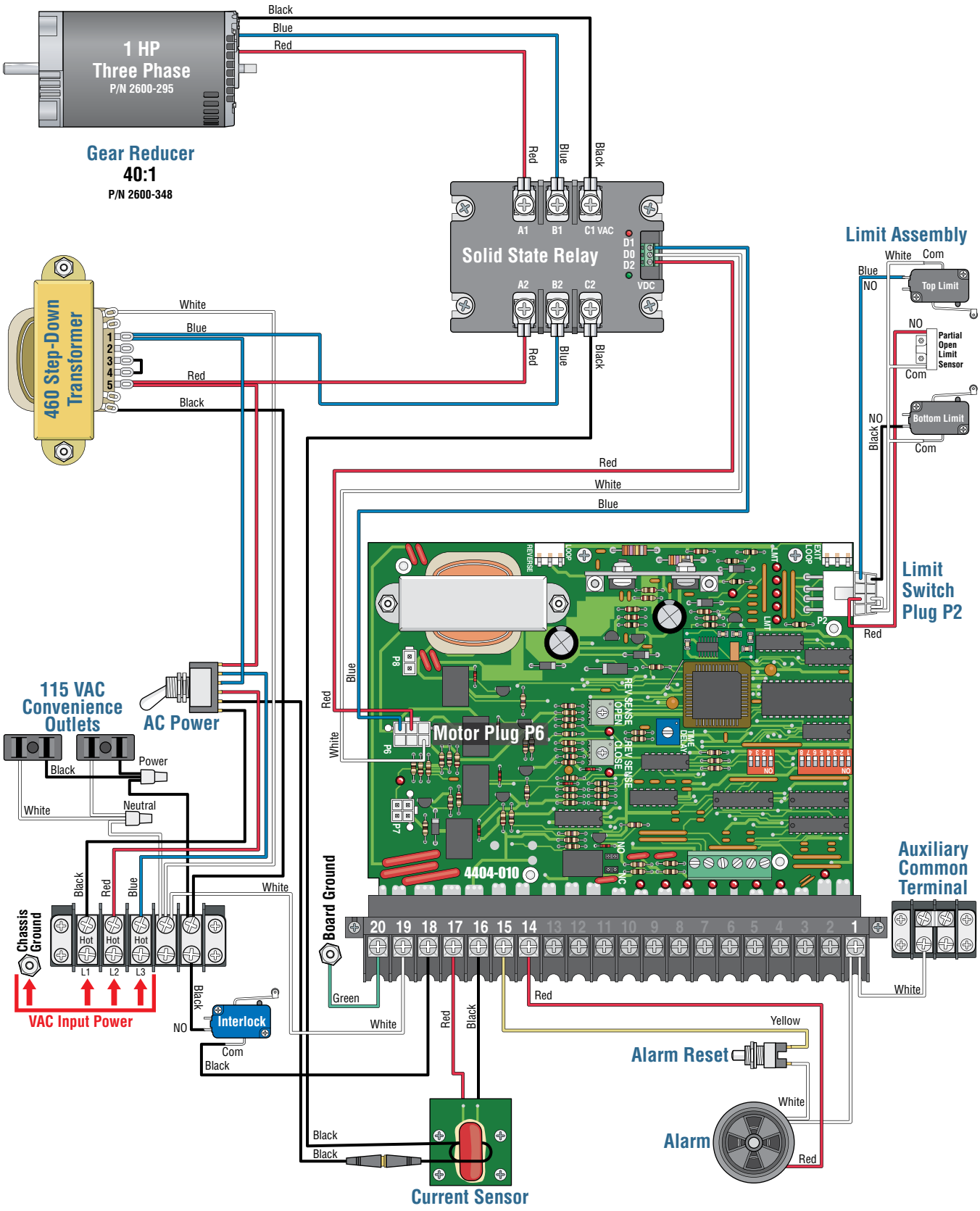

Model 9220 2 HP 1-Phase 208/230 VAC with Speed Controller

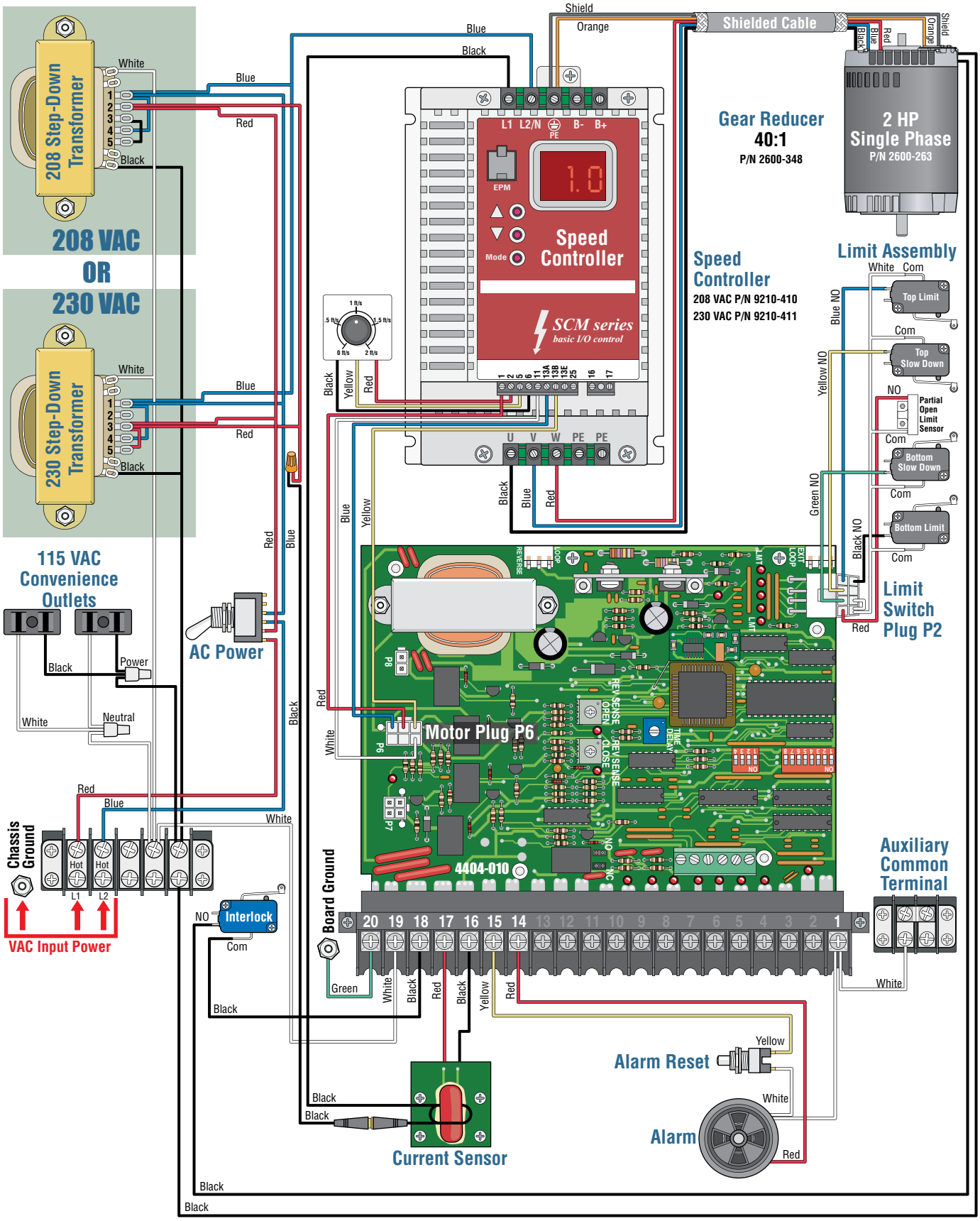

Model 9220 2 HP 3-Phase 208/230 VAC with Speed Controller

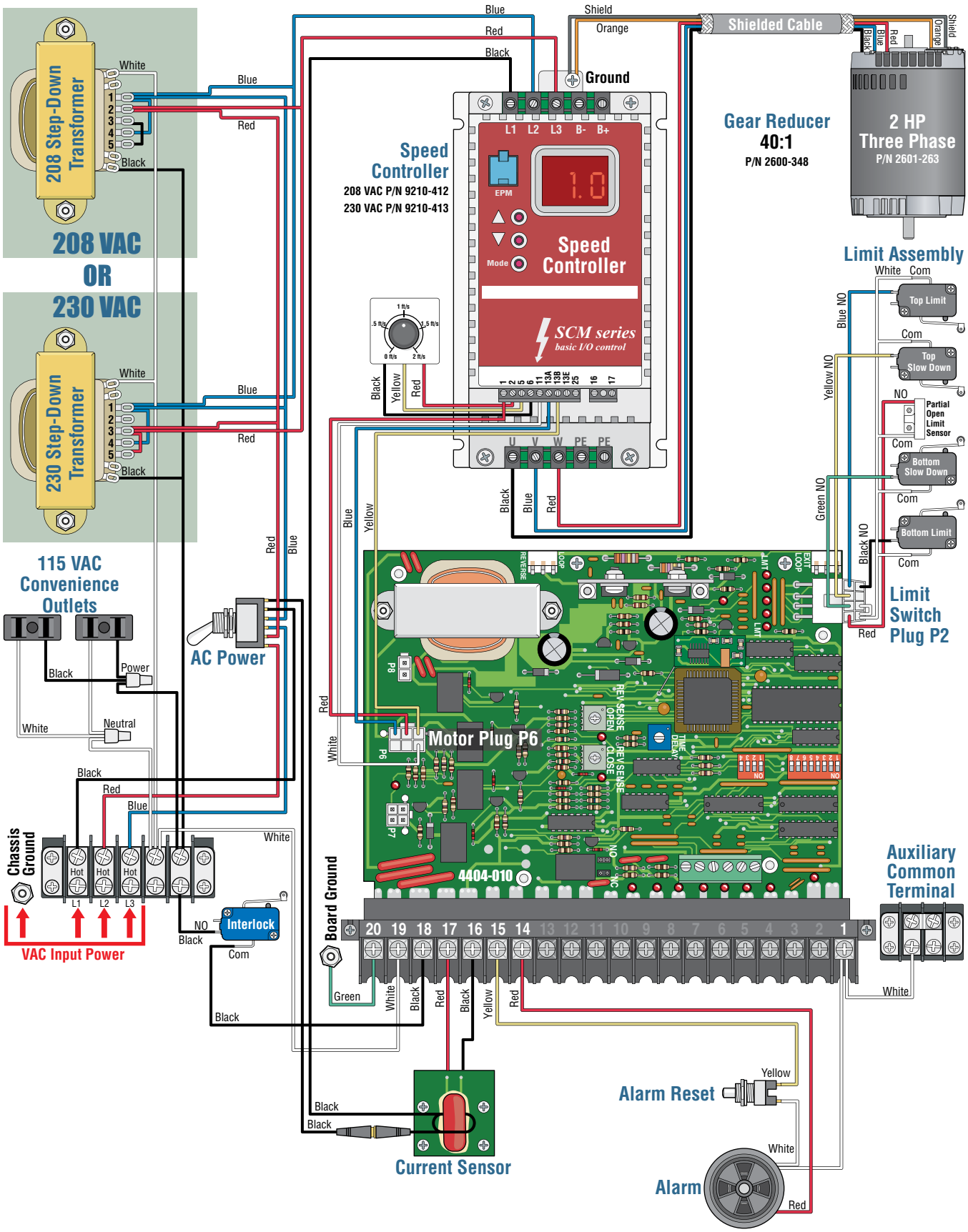

Model 9220 2 HP 3-Phase 460 VAC with Speed Controller

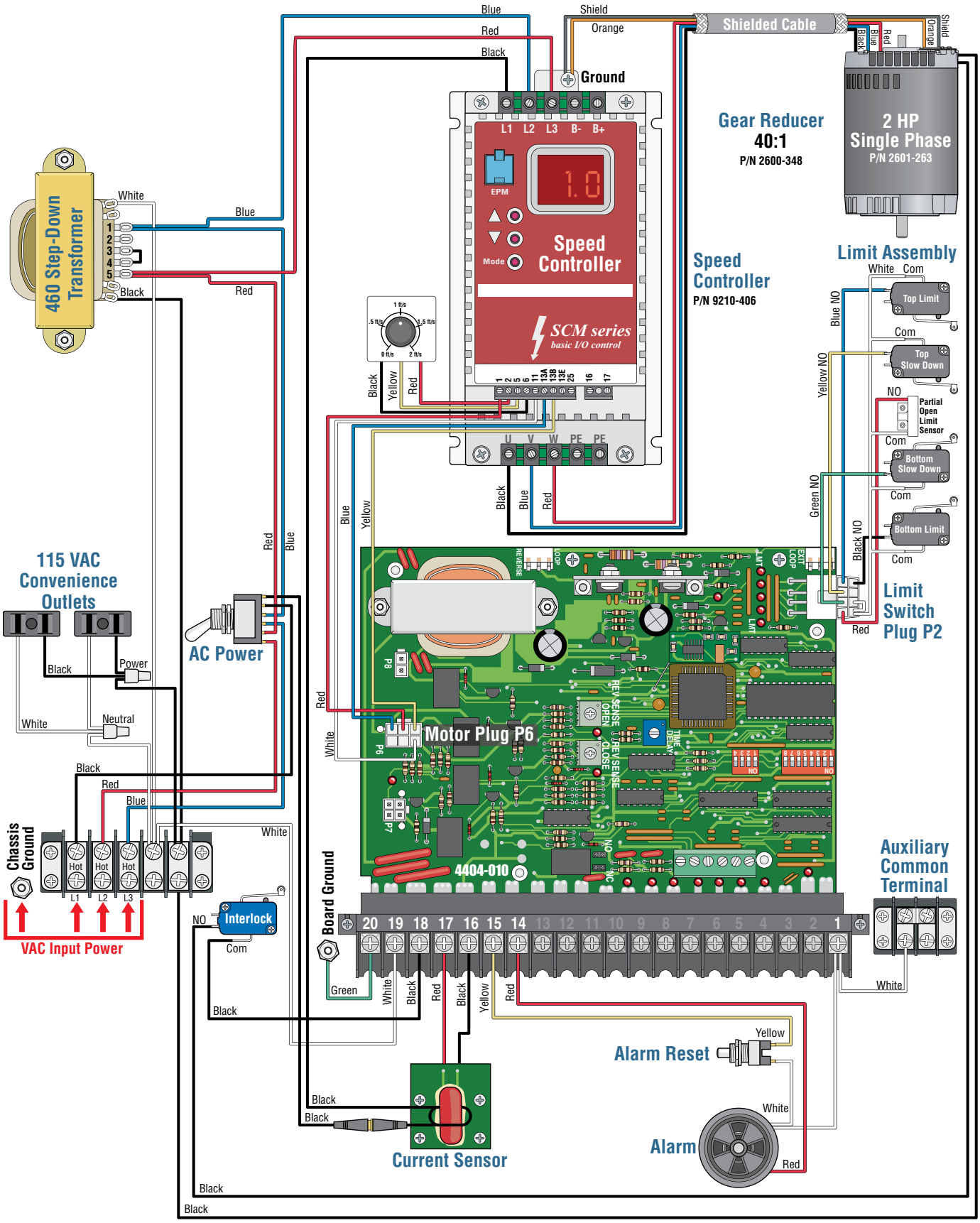

Model 9230 3 HP 3-Phase 208/230 VAC with Speed Controller

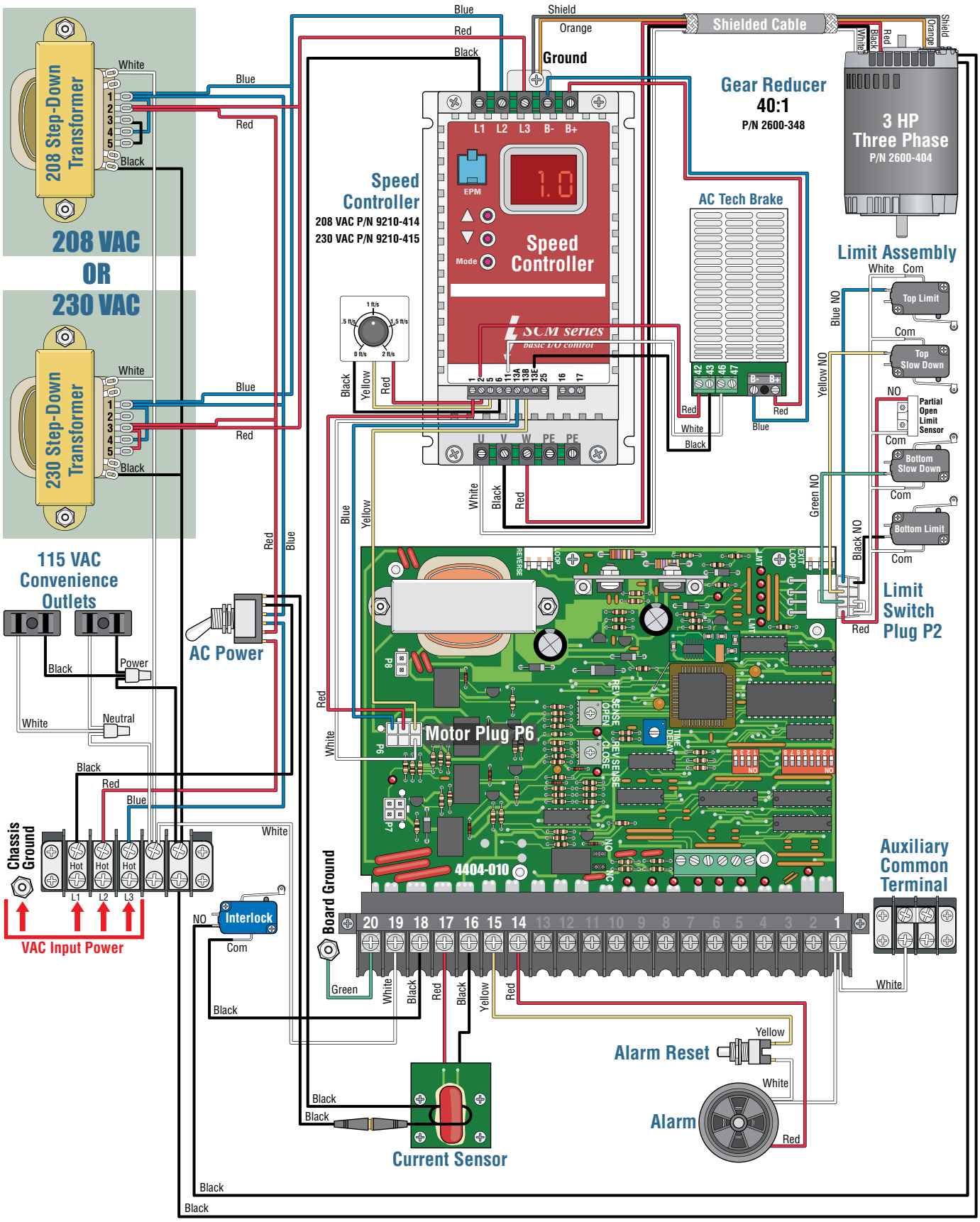

Model 9235 3 HP 3-Phase 208/230 VAC with Speed Controller

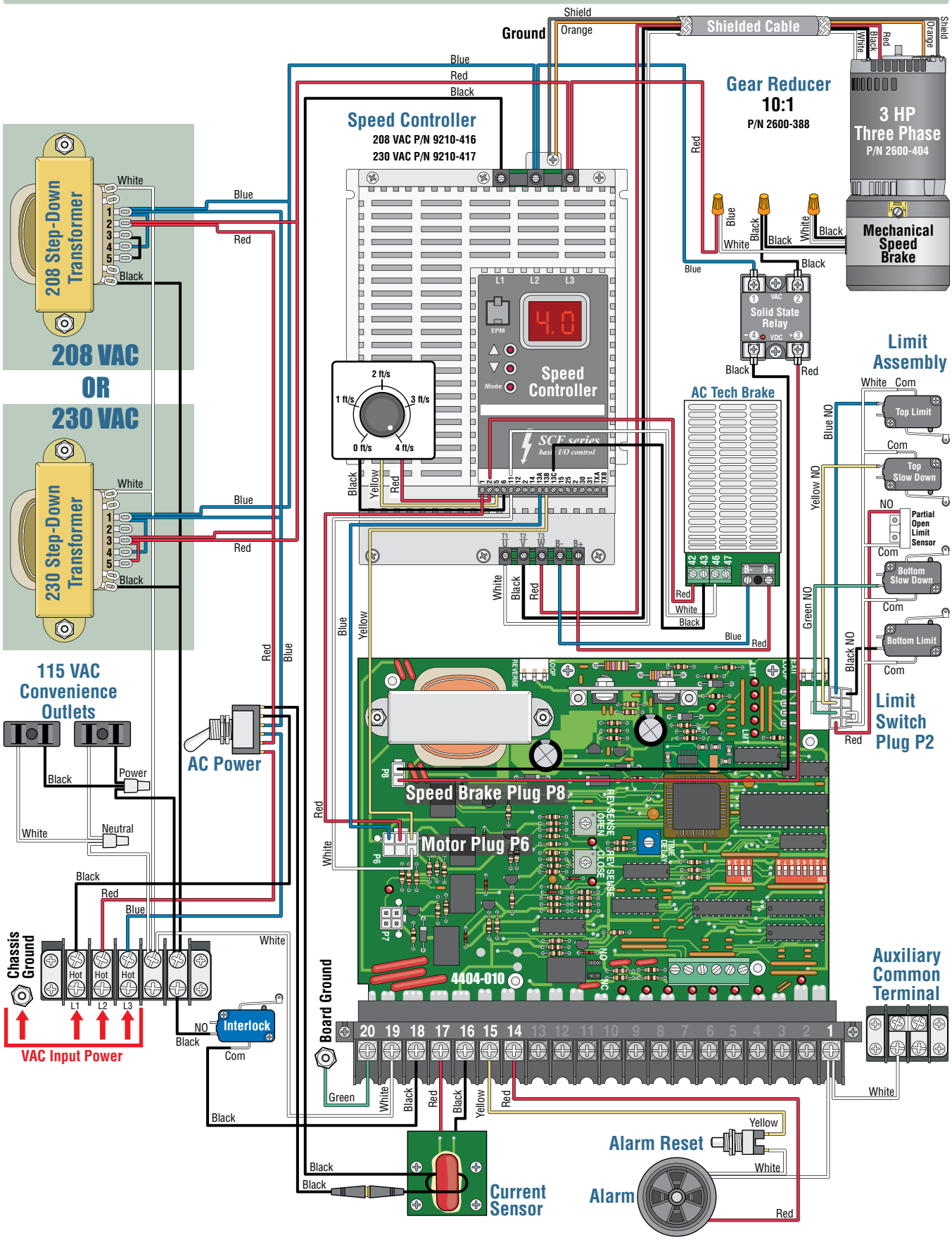

Model 9240 3 HP 3-Phase 208/230 VAC with Speed Controller

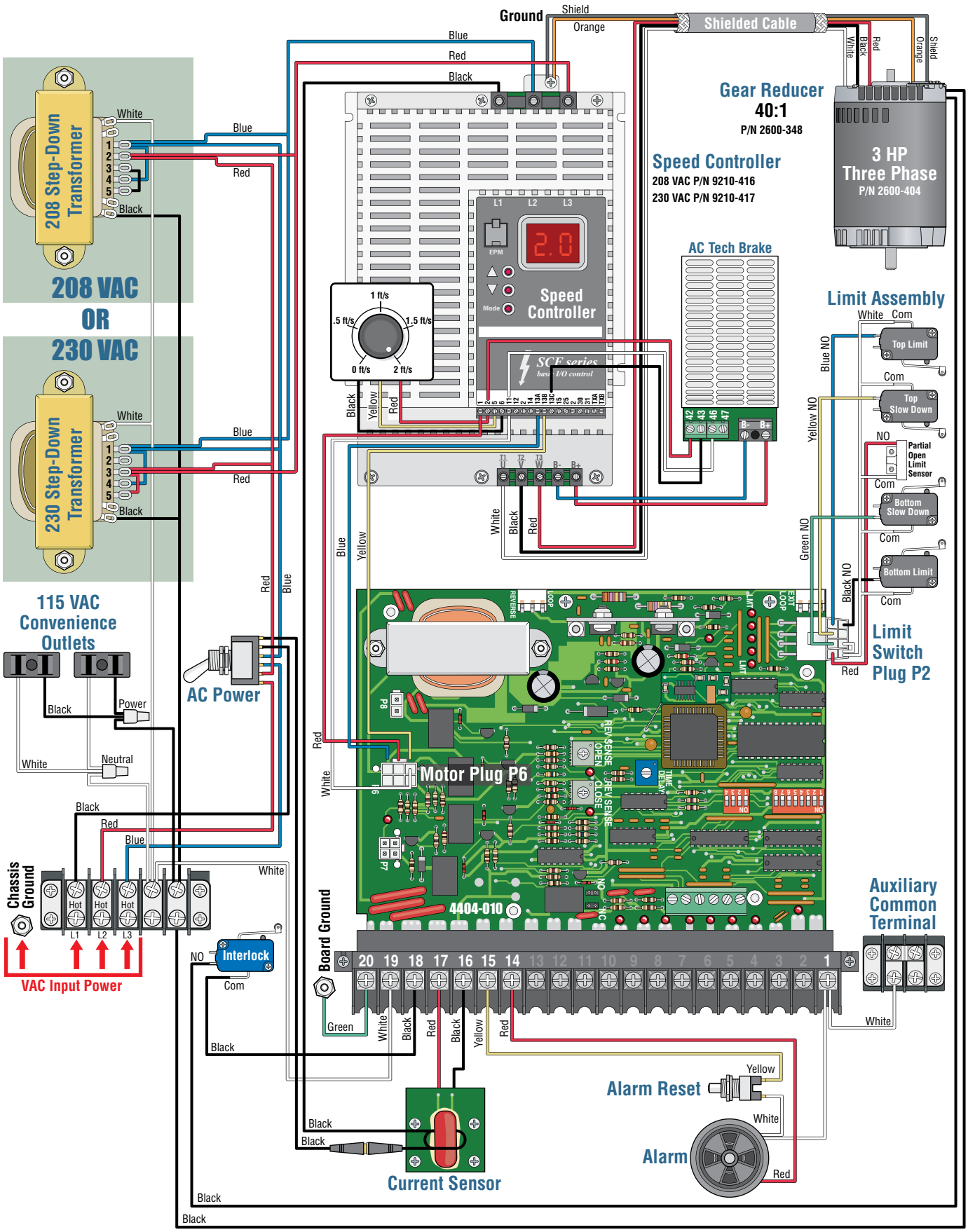

Installation/Owner's Manual

Series 9200

Heavy-Duty Vehicular Slide Gate Operator

9210-065-N-3-15

www.doorking.com

DoorKing, Inc.
120 S. Glasgow Avenue
Inglewood, California 90301
U.S.A.

Phone: 310-645-0023
Fax: 310-641-1586