Installation/Owner's Manual

Series 9150

Vehicular Slide Gate Operator

Use this manual for circuit board 4602-010 Revision A or higher.

9150-065-V-12-12

Convenience Open Optional

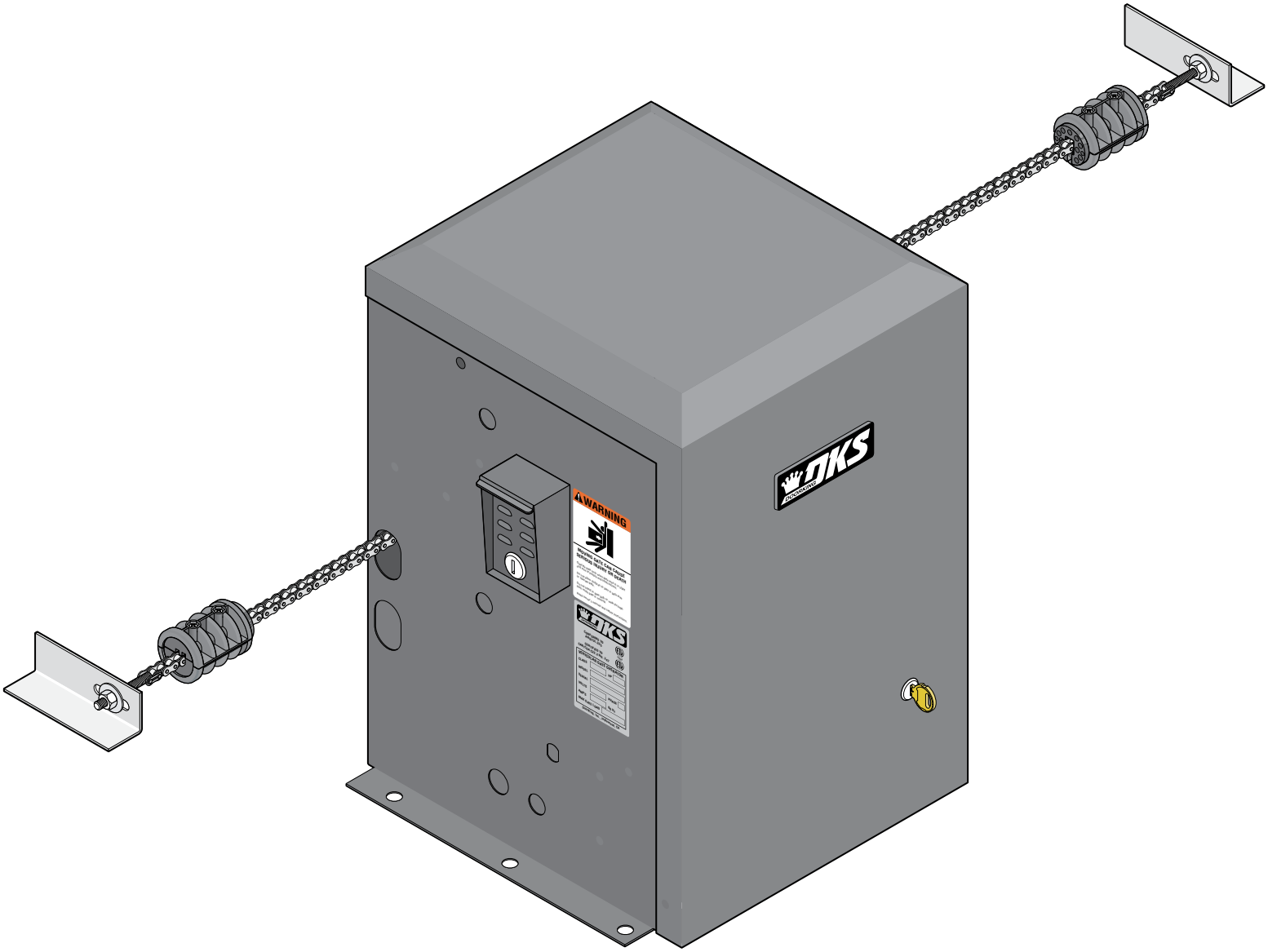

Date Installed: _____

Installer/Company Name: _____

_____

Phone Number: _____

Circuit Board
Serial Number
and Revision Letter: _____

Leave Manual with Owner

Copyright 2012 DoorKing, Inc. All rights reserved.

Intertek

UL 325 Compliant

DOORKING®, INC.™

SPECIFICATIONS

Use this manual for the Model 9150 operator with circuit board 4602-010 Rev A or higher ONLY.

Class of Operation Model 9150 - UL 325 Class I, II, III, IV
Type of Gate Vehicular Slide Gates Only
Drive Sprocket Size #40 Chain
Cycles Per Hour 60 Per Hour (Installed level).
Speed Approximately 1 Ft. per Second (Installed level).
Entrapment Protection **Primary** - Inherent entrapment sensing system (Type A)
Secondary - Provision for connection of a non-contact sensor (Type B1) and/or a contact sensor (Type B2).

Horsepower - Voltage - Phase	Amp	**Max Gate Length** Installed Level	**WITHOUT** Convenience Open Max. Gate Weight Installed Level	**WITH** Convenience Open Max. Gate Weight Installed Level
1/2 HP - 115 VAC Single-Phase	5.4	30 Ft.	1,000 Lbs.	800 Lbs.
1 HP - 115 VAC Single-Phase	9.7	45 Ft.	1,500 Lbs.	1,300 Lbs.

Note: 208/230/460/575 VAC input voltage can be connected to the operator by installing an "Optional" High Voltage Kit (P/N 2600-266).

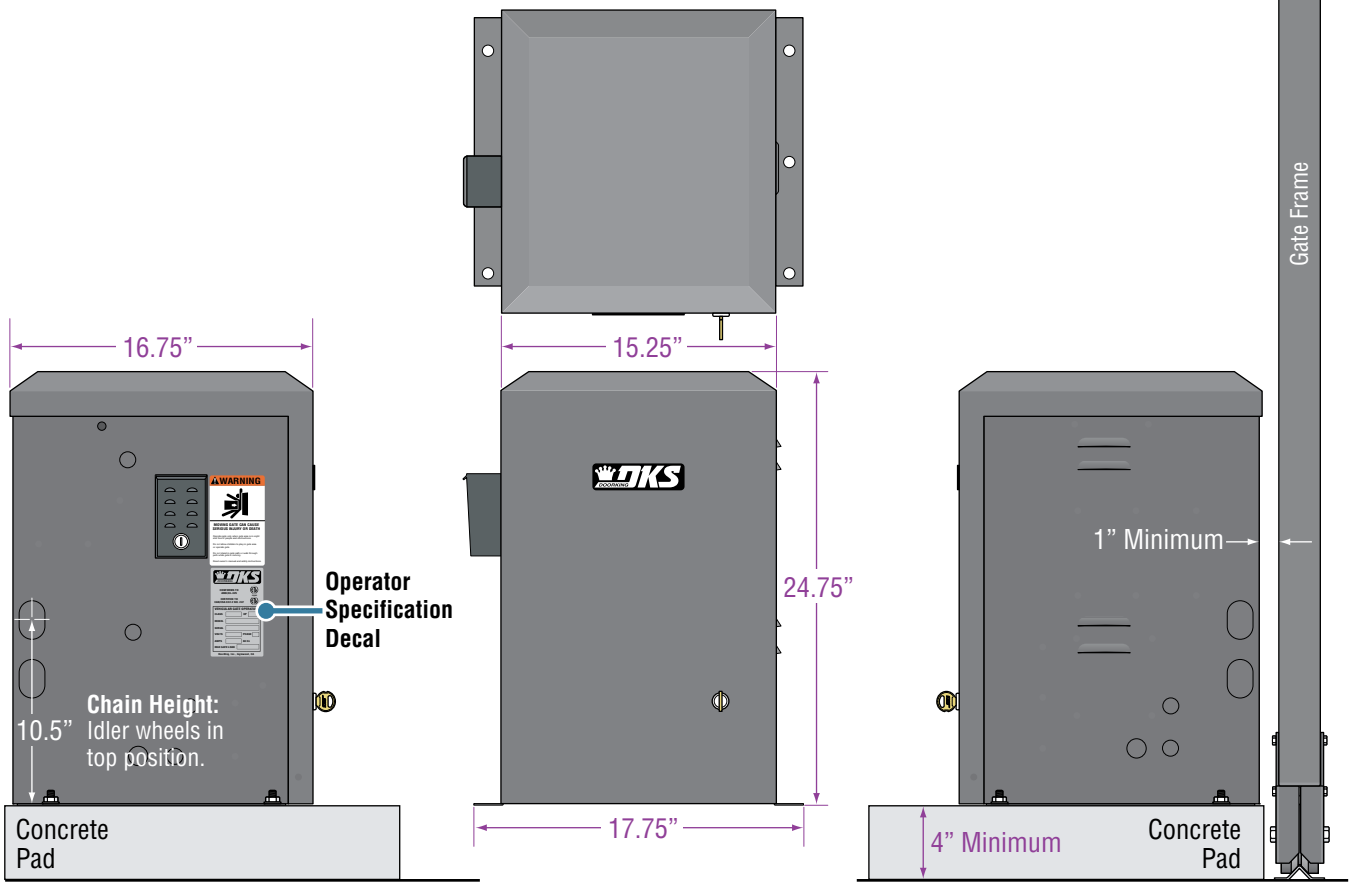

DoorKing, Inc. reserves the right to make changes in the products described in this manual without notice and without obligation of DoorKing, Inc. to notify any persons of any such revisions or changes. Additionally, DoorKing, Inc. makes no representations or warranties with respect to this manual. This manual is copyrighted, all rights reserved. No portion of this manual may be copied, reproduced, translated, or reduced to any electronic medium without prior written consent from DoorKing, Inc.

TABLE OF CONTENTS

SPECIFICATIONS 1

ASTM 2200 Standard for Gate Construction 4
Important Safety Instructions 4
Instructions regarding intended installation: 4
Important Notices 5
UL325 Entrapment Protection 6
Glossary 7
Slide Gate Requirements 8
Slide Gate Protection 9

SECTION 1 - INSTALLATION 10

1.1 Hardware for the Gate 10
1.2 Physical Stops for the Gate 10
1.3 Types of Gates 11
1.4 Operator Mounting Positions 12-15
1.5 Underground Conduit Requirements 15
1.6 Pad, Post or Ceiling Mount without / with J-Box Setup 16
1.7 Mounting Operator and Chain 17
1.8 Installation of Warning Signs 18
1.9 Chain Tray Kit 19

SECTION 2 - AC POWER TO OPERATOR(S) 20

2.1 High Voltage Wire Runs 20
2.2 High Voltage Terminal Connection 21

SECTION 3 - ADJUSTMENTS 22

3.1 4602 Circuit Board Description and Adjustments 22
3.2 DIP-Switch SW 1 and SW 2 Settings 23-24
3.3 Automatic Open / Close Limit Adjustment 25
3.4 Clutch Adjustment 26
3.5 Inherent Reverse Sensor Adjustment 26

TABLE OF CONTENTS

SECTION 4 - ENTRAPMENT AND SAFETY PROTECTION 27

4.1 UL 325 Terminal Description 27
4.2 Secondary Entrapment Protection Device Locations 28-29
4.3 Loop Detector Wiring 30

SECTION 5 - WIRING 31

5.1 Main Terminal Description 31
5.2 Control Wiring for Single/Primary Operator 32
5.3 Auxiliary Device Wiring 33
5.4 Bi-Parting Gates Wiring - Dual Gate Operators 34

SECTION 6 - OPERATING INSTRUCTIONS 35

6.1 AC Power and Reset Switch 35
6.2 Shutdown Conditions 36-37
- Soft Shutdown
- Hard Shutdown

6.3 Manual Gate Operation 37-38
- Fail-Safe Manual Release System
- Fail-Secure Manual Release System
- Emergency Vehicle Access Conditions

SECTION 7 - OPTIONAL CONVENIENCE OPEN ADJUSTMENTS 39

7.1 Circuit Board (2340) Setup 39
7.2 DC System Description 40
7.3 DIP-Switch Settings 40

SECTION 8 - MAINTENANCE AND TROUBLESHOOTING 41

8.1 Maintenance 41
8.2 Troubleshooting 42-43
8.3 Accessory Items 44
Model 9150 Wiring Diagrams 45-48

ASTM F2200 Standard for Gate Construction

Vehicular gates should be constructed and installed in accordance with ASTM F2200; Standard Specification for Automated Vehicular Gate Construction. For a copy of this standard, contact ASTM directly at 610-832-9585; service@astm.org; or www.astm.org.

Important Safety Instructions

WARNING - To reduce the risk of injury or death:

1. READ AND FOLLOW ALL INSTRUCTIONS.
2. Never let children operate or play with gate controls. Keep the remote control away from children.
3. Always keep people and objects away from gate. **NO ONE SHOULD CROSS THE PATH OF THE MOVING GATE.**
4. Test the operator monthly. The gate MUST reverse on contact with a rigid object or stop or reverse when an object activates the non-contact sensors. After adjusting the force or the limit of travel, retest the gate operator. Failure to adjust and retest the gate operator properly can increase the risk of injury or death.
5. Use the emergency release only when the gate is not moving.
6. KEEP GATES PROPERLY MAINTAINED. Read the owner's manual. Have a qualified service person make repairs to gate hardware.
7. The entrance is for vehicles only. Pedestrians must use separate entrance.
8. **SAVE THESE INSTRUCTIONS!**

Instructions regarding intended installation:

- Install the gate operator only if:
  1. The operator is appropriate for the construction of the gate and the usage class of the gate.
  2. All openings of a horizontal slide gate are guarded or screened from the bottom of the gate to a minimum of 6 feet (1.83 m) above the ground to prevent a 2 ¼ inch (57.2 mm) diameter sphere from passing through the openings anywhere in the gate, and in that portion of the adjacent fence that the gate covers in the open position.
  3. All exposed pinch points are eliminated or guarded.
  4. Guarding is supplied for exposed rollers.
- The operator is intended for installation only on gates used for vehicles. Pedestrians must be supplied with a separate access opening. The pedestrian access opening shall be designed to promote pedestrian usage. Locate the gate such that persons will not come in contact with the vehicular gate during the entire path of travel of the vehicular gate.
- The gate must be installed in a location so that enough clearance is supplied between the gate and adjacent structures when opening and closing to reduce the risk of entrapment. Swinging gates should not open into public access areas.
- The gate must be properly installed and work freely in both directions prior to the installation of the gate operator. Do not over-tighten the operator clutch, pressure relief valve or reduce reversing sensitivity to compensate for a damaged gate.
- For gate operators utilizing Type D protection:
  1. The gate operator controls must be placed so that the user has full view of the gate area when the gate is moving.
  2. A warning placard shall be placed adjacent to the controls.
  3. An automatic closing device (such as a timer, loop sensor, or similar device) shall not be employed.
  4. No other activation device shall be connected.
- Controls intended for user activation must be located at least ten feet (10’) away from any moving part of the gate and where the user is prevented from reaching over, under, around or through the gate to operate the controls. Outdoor or easily accessible controls should have a security feature to prevent unauthorized use.
- The Stop and/or Reset button must be located in the line-of-sight of the gate. Activation of the reset control shall not cause the operator to start.
- A minimum of two (2) WARNING SIGNS shall be installed, one on each side of the gate where easily visible.
- For gate operators utilizing a non-contact sensor:
  1. See the instructions on the placement of non-contact sensors for each type of application.
  2. Care shall be exercised to reduce the risk of nuisance tripping, such as when a vehicle trips the sensor while the gate is still moving in the opening direction.
  3. One or more non-contact sensors shall be located where the risk of entrapment or obstruction exist, such as the perimeter reachable by a moving gate or barrier.

- For gate operators utilizing contact sensors:
  1. One or more contact sensors shall be located where the risk of entrapment or obstruction exist, such as at the leading edge, trailing edge, and post mounted both inside and outside of a vehicular horizontal slide gate.
  2. One or more contact sensors shall be located at the bottom edge of a vehicular vertical lift gate.
  3. One or more contact sensors shall be located at the pinch point of a vehicular vertical pivot gate.
  4. A hardwired contact sensor shall be located and its wiring arranged so that the communication between the sensor and the gate operator is not subjected to mechanical damage.
  5. A wireless contact sensor such as one that transmits radio frequency (RF) signals to the gate operator for entrapment protection functions shall be located where the transmission of the signals are not obstructed or impeded by building structures, natural landscaping or similar obstructions. A wireless contact sensor shall function under the intended end-use conditions.
  6. One or more contact sensors shall be located at the bottom edge of a vertical barrier (arm).

Important Notices

Vehicular gate operator products provide convenience and security. However, gate operators must use high levels of force to move gates and most people underestimate the power of these systems and do not realize the potential hazards associated with an incorrectly designed or installed system. These hazards may include:

- Pinch points
- Entrapment areas
- Reach through hazards
- Absence of entrapment protection devices
- Improperly located access controls
- Absence of vehicle protection devices
- Absence of controlled pedestrian access

In addition to these potential hazards, automated vehicular gate systems must be installed in accordance with the UL 325 Safety Standard and the ASTM F2200 Construction Standard. Most lay persons are unaware of, or are not familiar with, these standards. If an automated vehicular gate system is not properly designed, installed, used and maintained, serious injuries or death can result. Be sure that the installer has instructed you on the proper operation of the gate and gate operator system.

Be sure that the installer has trained you about the basic functions of the required reversing systems associated with your gate operating system and how to test them. These include reversing loops, inherent reversing system, electric edges, photoelectric cells, or other external devices.

- This Owner's Manual is your property. Keep it in a safe place for future reference.
- Be sure that all access control devices are installed a minimum distance of 10 feet away from the gate and gate operator, or in such a way that a person cannot touch the gate or gate operator while using the device. If access control devices are installed in violation of these restrictions, immediately remove the gate operator from service and contact your installing dealer.
- Loops and loop detectors, photo-cells or other equivalent devices must be installed to prevent the gate from closing on vehicular traffic.
- The speed limit for vehicular traffic through the gate area is 5 MPH. Install speed bumps and signs to keep vehicular traffic from speeding through the gate area. Failure to adhere to posted speed limits can result in damage to the gate, gate operator, and to the vehicle.
- Be sure that all persons who will use the gate system are familiar with the proper use of the gate and gate operator and are familiar with the possible hazards associated with the gate system.
- Be sure that warning signs are permanently installed on both sides of the gate in an area where they are fully visible to traffic.
- It is your responsibility to periodically check all entrapment protection devices. If any of these devices are observed to function improperly, remove the operator from service immediately and contact your installing or servicing dealer.
- Follow the recommended maintenance schedule.
- Do not allow children to play in the area of the operator or to play with any gate-operating device.
- To remove the gate operator from service, operate the gate to the full open position and then shut off power to the operator at the service panel.

UL 325 Entrapment Protection

Class I

A vehicular gate operator (or system) intended for use in a home of one-to four single family dwelling, or a garage or parking area associated therewith.

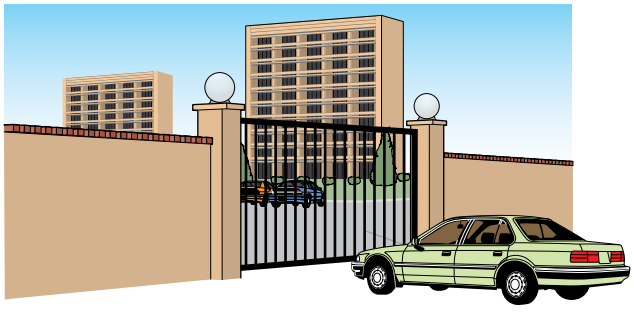

Class II

A vehicular gate operator (or system) intended for use in a commercial location or building such as a multi-family housing unit (five or more single family units) hotel, garages, retail store or other building servicing the general public.

Class III

A vehicular gate operator (or system) intended for use in a industrial location or building such as a factory or loading dock area or other locations not intended to service the general public.

Class IV

A vehicular gate operator (or system) intended for use in a guarded industrial location or building such as an airport security area or other restricted access locations not servicing the general public, in which unauthorized access is prevented via supervision by security personnel.

This table illustrates the entrapment protection requirements for each of the four UL 325 classes.

UL 325 Classifications	Horizontal Slide, Vertical Lift, Vertical Pivot		Swing and Vertical Barrier (arm)	
	Primary Protection	Secondary Protection	**Primary Protection**	Secondary Protection
Class I and II	**A**	B1, B2 or D	**A or C**	A, B1, B2, C or D
Class III	**A, B1 or B2**	A, B1, B2, D or E	**A, B1, B2 or C**	A, B1, B2, C or D
Class IV	**A, B1, B2 or D**	A, B1, B2, D or E	**A, B1, B2, C or D**	A, B1, B2, C, D or E

A - Inherent entrapment protection system.
B1 - Provision for connection of, or supplied with, a non-contact sensor (photoelectric sensor or the equivalent). When used as the PRIMARY device, must be monitored.
B2 - Provision for connection of, or supplied with, a contact sensor (edge device or the equivalent). When used as the PRIMARY device, must be monitored.
C - Inherent adjustable clutch or pressure relief device.
D - Provision for connection of, or supplied with, an actuating device requiring continuous pressure to maintain opening or closing motion of the gate.
E - An inherent audio alarm.

Glossary

GATE - A moving barrier such as a swinging, sliding, raising, lowering, or the like, barrier, that is a stand-alone passage barrier or is that portion of a wall or fence system that controls entrance and/or egress by persons or vehicles and completes the perimeter of a defined area.

RESIDENTIAL VEHICULAR GATE OPERATOR – CLASS I - A vehicular gate operator (or system) intended for use in a home of one-to four single family dwelling, or garage or parking area associated therewith.

COMMERCIAL / GENERAL ACCESS VEHICULAR GATE OPERATOR - CLASS II - A vehicular gate operator (or system) intended for use in a commercial location or building such as a multi-family housing unit (five or more single family units), hotels, garages, retail store, or other building servicing the general public.

INDUSTRIAL / LIMITED ACCESS VEHICULAR GATE OPERATOR - CLASS III - A vehicular gate operator (or system) intended for use in an industrial location or building such as a factory or loading dock area or other locations not intended to service the general public.

RESTRICTED ACCESS VEHICULAR GATE OPERATOR - CLASS IV - A vehicular gate operator (or system) intended for use in a guarded industrial location or building such as an airport security area or other restricted access locations not servicing the general public, in which unauthorized access is prevented via supervision by security personnel.

VEHICULAR BARRIER (ARM) OPERATOR (OR SYSTEM) - An operator (or system) that controls a cantilever type device (or system), consisting of a mechanical arm or barrier that moves in a vertical arc, intended for vehicular traffic flow at entrances or exits to areas such as parking garages, lots or toll areas.

VEHICULAR HORIZONTAL SLIDE-GATE OPERATOR (OR SYSTEM) - A vehicular gate operator (or system) that controls a gate which slides in a horizontal direction that is intended for use for vehicular entrance and exit to a drive, parking lot, or the like.

VEHICULAR SWING-GATE OPERATOR (OR SYSTEM) - A vehicular gate operator (or system) that controls a gate which moves in an arc in a horizontal plane that is intended for use for vehicular entrance and exit to a drive, parking lot, or the like.

SYSTEM - In the context of these requirements, a system refers to a group of interacting devices intended to perform a common function.

WIRED CONTROL - A control implemented in a form of fixed physical interconnections between the control, the associated devices, and an operator to perform predetermined functions in response to input signals.

WIRELESS CONTROL - A control implemented in means other than fixed physical interconnections (such as radio waves or infrared beams) between the control, the associated devices, and an operator to perform predetermined functions in response to input signals.

INHERENT ENTRAPMENT PROTECTION SYSTEM - A system, examples being a motor current or speed sensing system, which provides protection against entrapment upon sensing an object and is incorporated as a permanent and integral part of the operator.

EXTERNAL ENTRAPMENT PROTECTION DEVICE - A device, examples being an edge sensor, a photoelectric sensor, or similar entrapment protection device, which provides protection against entrapment when activated and is not incorporated as a permanent part of an operator.

ENTRAPMENT - The condition when an object is caught or held in a position that increases the risk of injury.

Slide Gate Requirements

The operator is intended for installation only on gates used for vehicles. Pedestrians must be supplied with a separate access opening. The pedestrian access opening shall be designed to promote pedestrian usage. Locate the gate such that persons will not come in contact with the vehicular gate during the entire path of travel of the vehicular gate. (ref. UL 325 56.8.4.b)

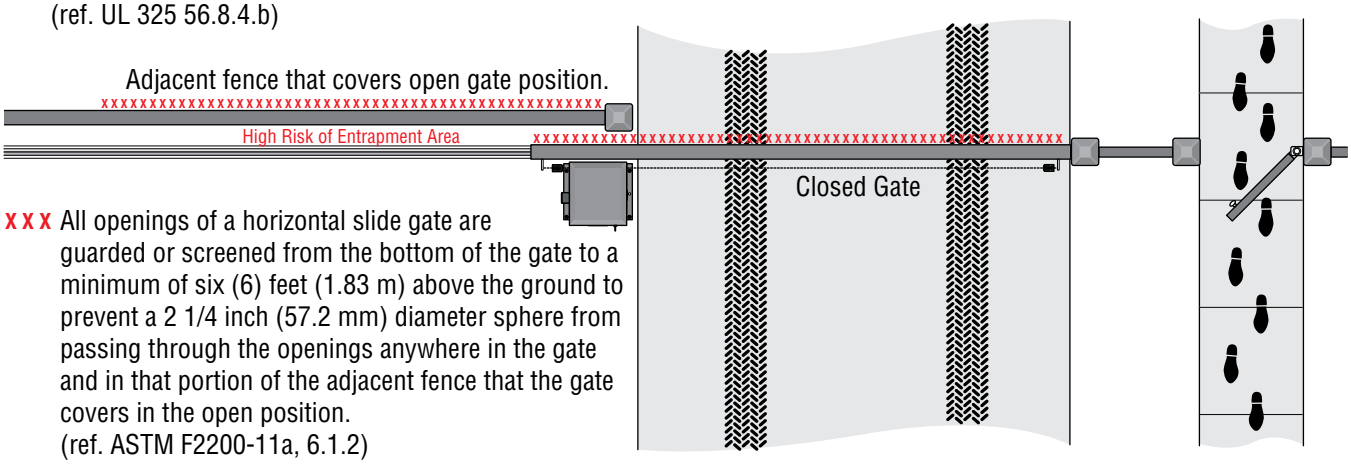

X X X All openings of a horizontal slide gate are guarded or screened from the bottom of the gate to a minimum of six (6) feet (1.83 m) above the ground to prevent a 2 1/4 inch (57.2 mm) diameter sphere from passing through the openings anywhere in the gate and in that portion of the adjacent fence that the gate covers in the open position. (ref. ASTM F2200-11a, 6.1.2)

Compliant openings less than 2 1/4".

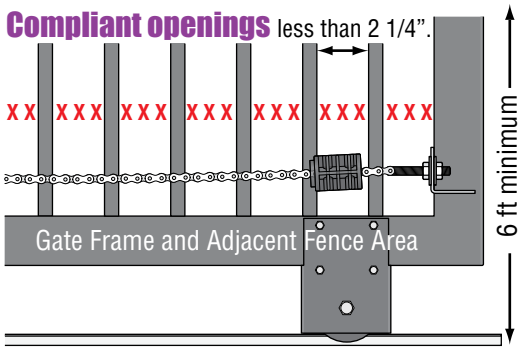

Non-compliant openings wider than 2 1/4".

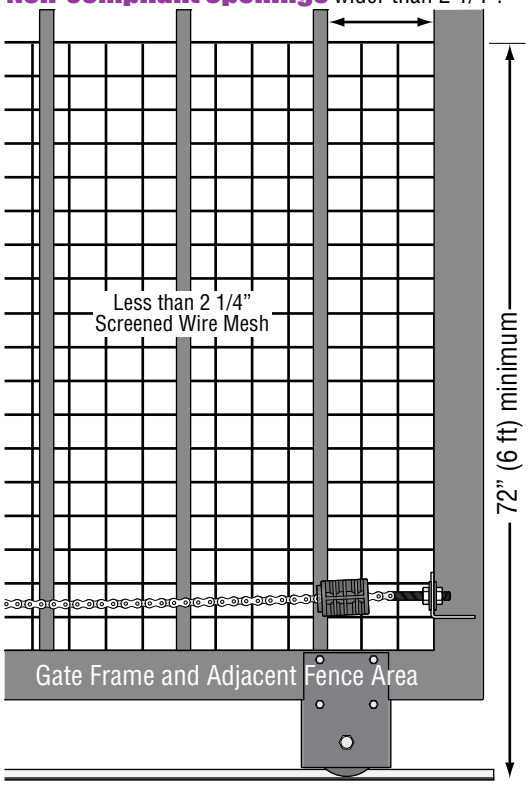

Note: Install screened wire mesh to a non-compliant gate **AND** non-compliant adjacent fence that covers open gate position (See above).

A gap, measured in the horizontal plane parallel to the roadway, between a fixed stationary object nearest the roadway (such as a gate support post) and the gate frame when the gate is in either the fully open position or the fully closed position, shall not exceed 2 1/4 inch (57.2 mm). (ref. ASTM F2200 6.1.4)

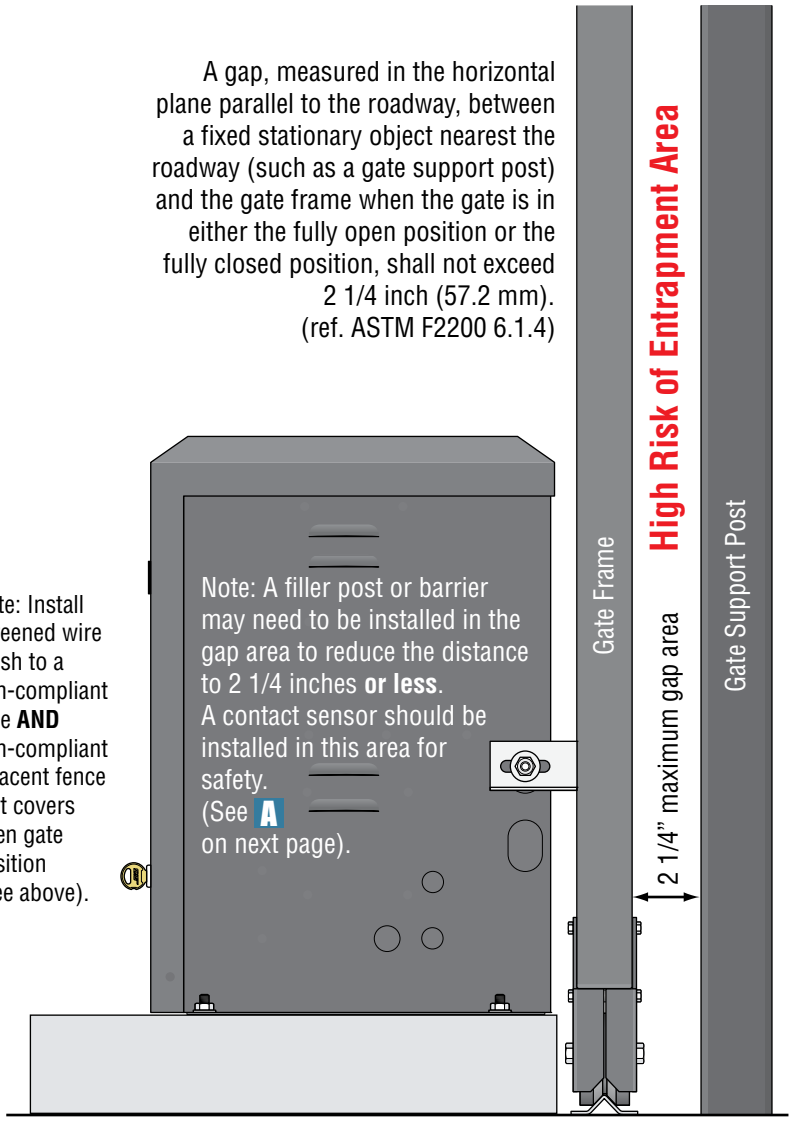

Slide Gate Protection

Entrapment protection devices are required to reduce the risk of injury. Install sensors where the risk of entrapment or obstruction exists while gate is moving. Individual requirements will vary.

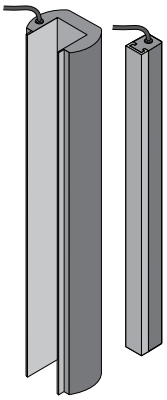

Contact Sensor (Reversing Edges)

A Installed on the fence to help minimize the potential of entrapment between the gate and fence. A filler post or barrier may need to be installed between fence and gate.

B Helps minimize the potential of entrapment during the back travel of the gate.

C Minimizes the potential of the gate closing on vehicular or other traffic that loops cannot sense.

Non-Contact Sensors (Photo Sensors)

1 Minimizes the potential of the gate closing on vehicular or other traffic that loops cannot sense.

2 Helps minimize the potential of entrapment during the back travel of the gate.

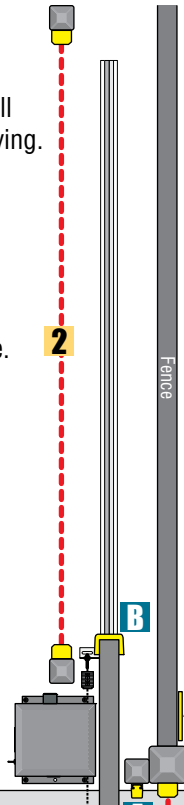

Warning Signs

Permanently mounted and easily visible from either side of the gate.

Automatic Exit Loop

(Optional) will provide an open command to the gate operator(s) when a vehicle is exiting the property.

Secure Side of Gate

Reverse Loop

Minimizes the potential of the gate closing when a vehicle is present. Number and placement of loops is dependent on the application.

Reverse Loop

Minimizes the potential of the gate closing when a vehicle is present. Number and placement of loops is dependent on the application.

Non-Secure Side of Gate

See pages 27-30 for typical layout locations.

Warning Signs

Permanently mounted and easily visible from either side of the gate.

Separate Pedestrian Walkway

Located so pedestrians cannot come in contact with the vehicular gate.

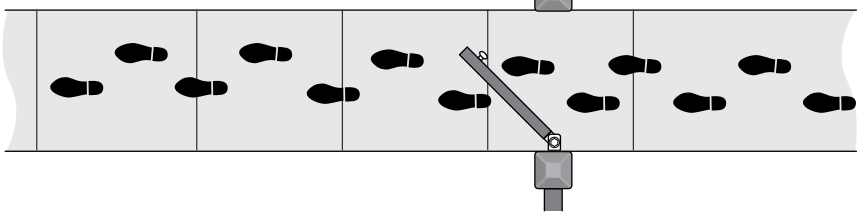

SECTION 1 - INSTALLATION

Prior to beginning the installation of the slide gate operator, we suggest that you become familiar with the instructions, illustrations, and wiring guide-lines in this manual. This will help insure that your installation is performed in an efficient and professional manner compliant with UL 325 safety and ASTM F2200 construction standards.

The proper installation of the vehicular slide gate operator is an extremely important and integral part of the overall access control system. Check all local building ordinances and building codes prior to installing this operator. Be sure your installation is in compliance with local codes.

1.1 Hardware for the Gate

Good hardware is essential for proper operation of a sliding gate. DoorKing has a full line of gate hardware products that will ensure safe, reliable and long lasting gate operation. The gate must be properly installed and roll smoothly in both directions.

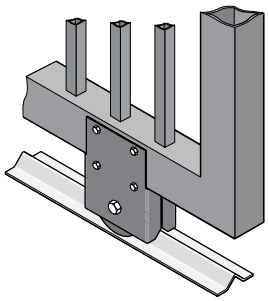

Roller Bearing V-Wheels with Protective Cover - Helps to minimize a pinch point on the gate's wheel and V-rail.

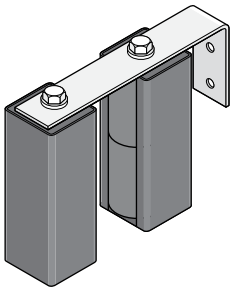

Guide Rollers with Protective Covers - Helps to minimize a pinch point on the gate.

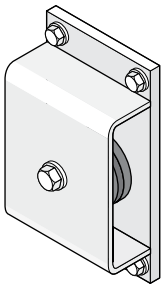

Endless Idler Assembly with Protective Cover - Helps to minimize a pinch point for a 180° chain return.

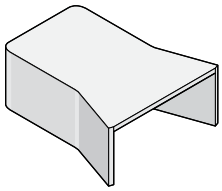

Gate End Retainer - Helps stabilize the end of the gate in the open or closed position. Recommended for all slide gate applications.

1.2 Physical Stops for the Gate

The 9150's automatic open/close gate limits **must have a physical stop on the open and close positions of the gate**. This can be the use of end posts with gate end retainers or chain stops, depending on the mounting position of the operator. **Note:** Chain stops DO NOT meet the ASTM F2200 requirements for physical gate stops.

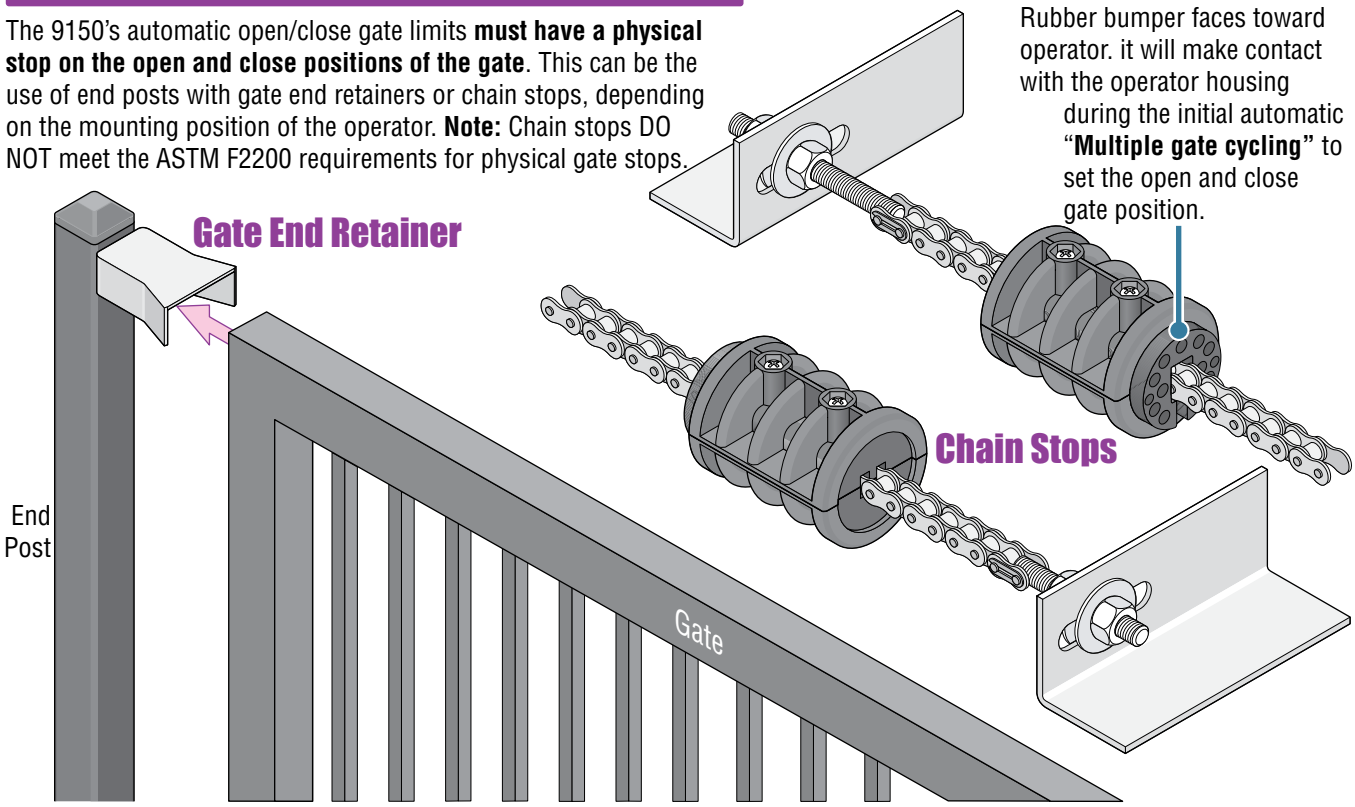

1.3 Typical Gate Types

The Model 9150 operator is designed to be installed on these gate types. See the next 4 pages for specific operator mounting positions. Individual installations and physical stops can vary.

- 1500 lb. max. weight per gate (1 HP).
- Single Operator - 45 ft max. gate length (1 HP).
- Dual Operators - 90 ft max. total gate length (1 HP).
- Chain tray recommended for gates longer than 20 ft using front or center post mount installations ONLY.

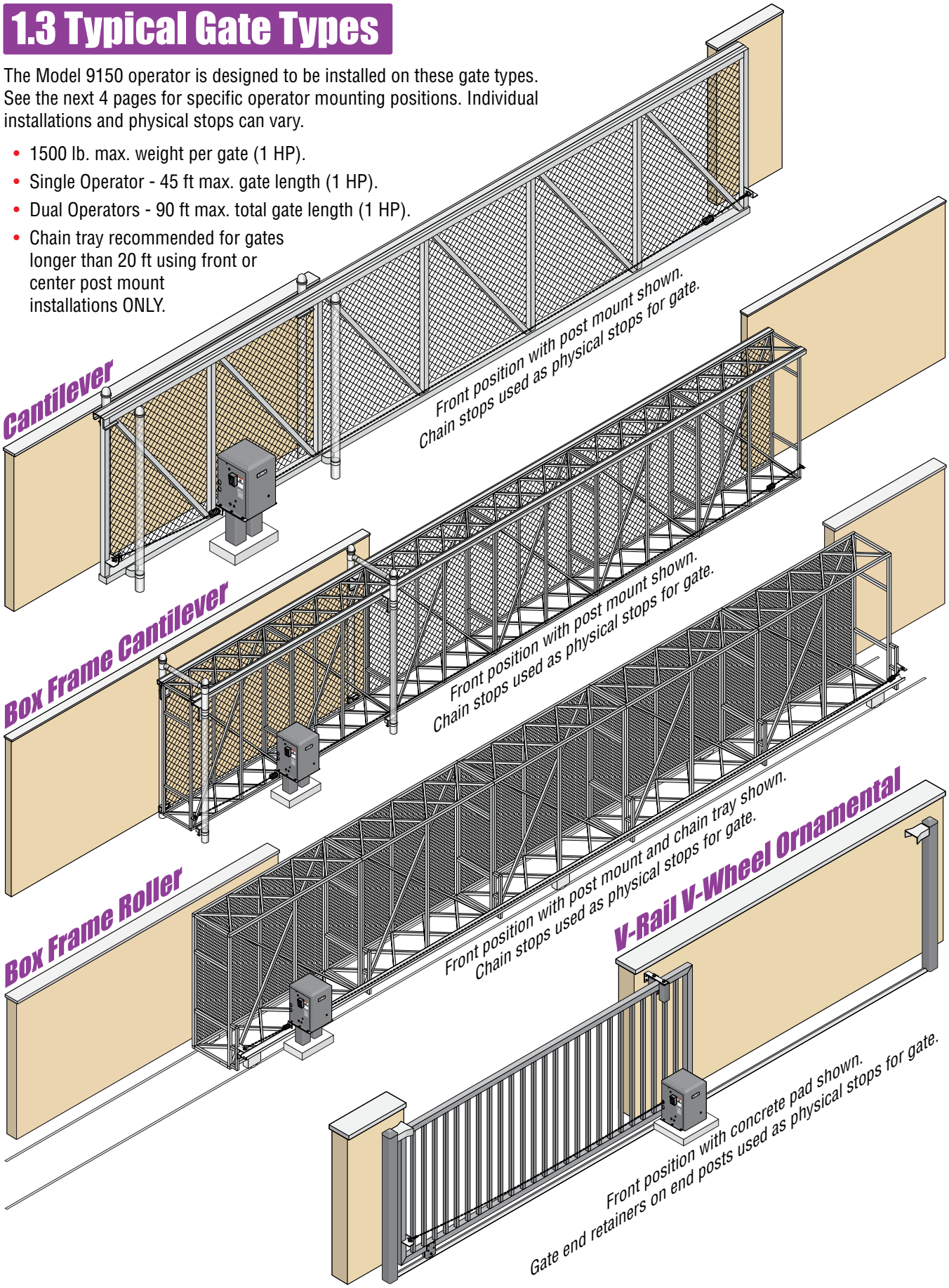

1.4 Operator Mounting Positions

The Model 9150 operator is designed to be installed in the front, rear, center or ceiling mounting positions shown on this page and the next 3 pages. V-wheel V-rail ornamental gates are shown as examples but other gate types on the previous page can use the same mounting setups. Once the mounting position has been determined, the chain idler wheels may need to be adjusted **BEFORE** the operator is mounted. **Physical stops MUST be used in the open AND close positions for ANY gate installation (Chain stops, end posts with gate end retainers or a wall that the gate comes in contact with).**

Front Position with Concrete Pad

Standard method of installation.

- Operator's chain idler wheels are factory set for the front position.
- Remove only the top chain knockouts from each side of the operator.
- Chain stops or gate end retainer can be used as the physical stop for the gate (Chain stops are shown).

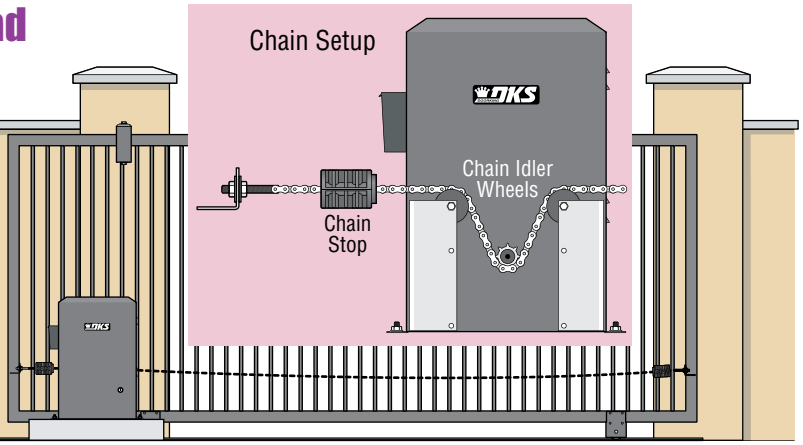

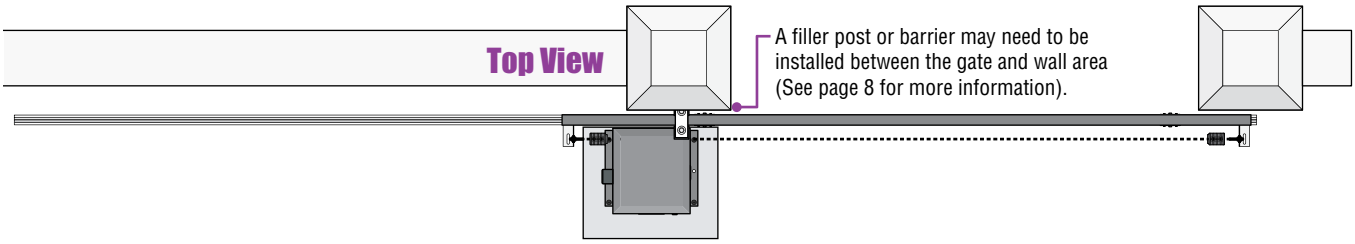

Front Position with Post Mount

Raises operator and allows different chain heights. Optional chain tray kit can be used and is recommended for gates over 20 ft, supports the chain's weight and helps prevent chain "stretching". See page 19 for more information.

Gate End Retainer

- Set operator chain idler wheels in the bottom position.
- **DO NOT** remove chain knockouts.
- Chain stops with base plate stop brackets or gate end retainer can be used as the physical stop for the gate (Both are shown, only one type is needed).

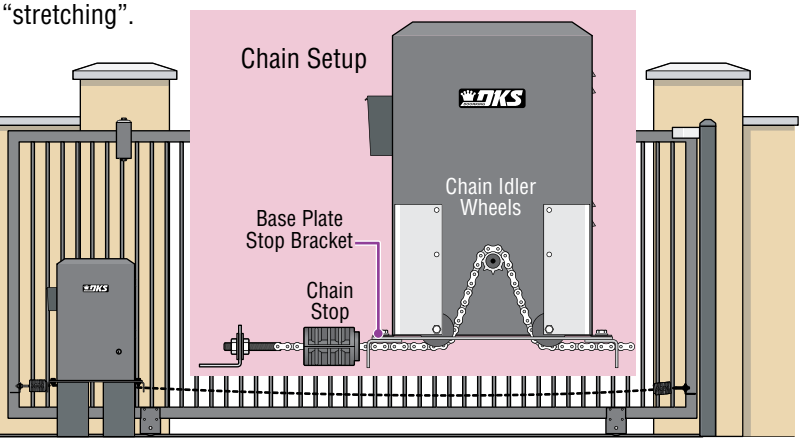

Additional hardware required. Post base plate (P/N 2600-495) 6 x 6 steel posts not available from DoorKing.
Base plate stop brackets (P/N 2600-970) bolts on post base plate when using chain stops.
Optional chain tray kit (P/N 2601-270 10 ft section) and additional chain #40 (P/N 2600-442 - 20 ft. per box) may be needed.

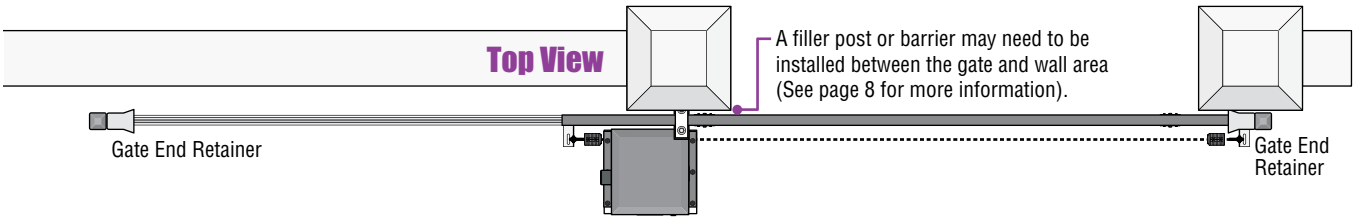

Rear Position with Concrete Pad

Hides the chain from outside the property looking in.

- Set one chain Idler wheel at the top and one in the center position on one side of the operator.
- Remove both chain knockouts from one side of the operator.
- Chain stops or gate end retainer can be used as the physical stop for the gate (Chain stops are shown).

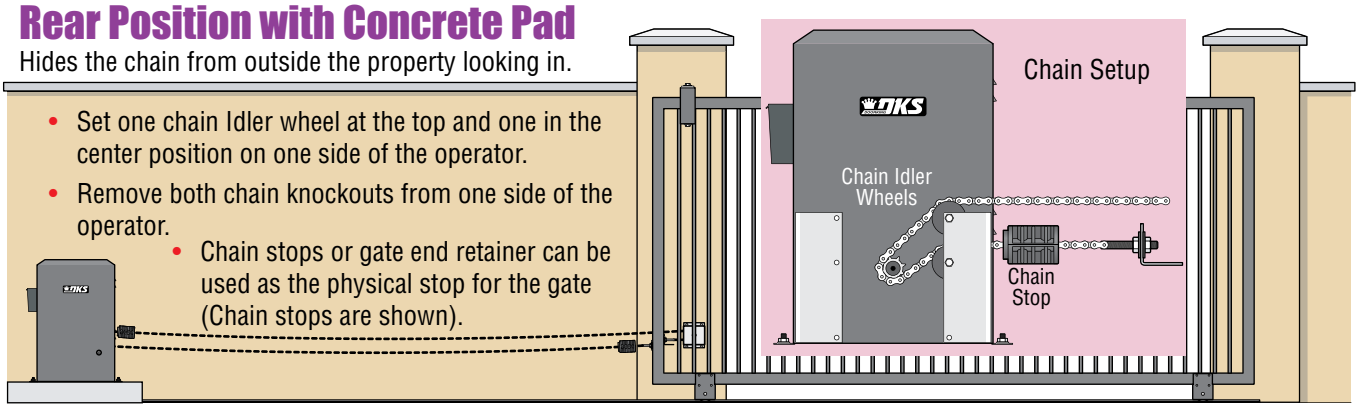

Additional hardware required. Endless idler assembly (P/N 2600-818) and additional chain #40 (P/N 2600-442 - 20 ft. per box) may be needed.

Top View

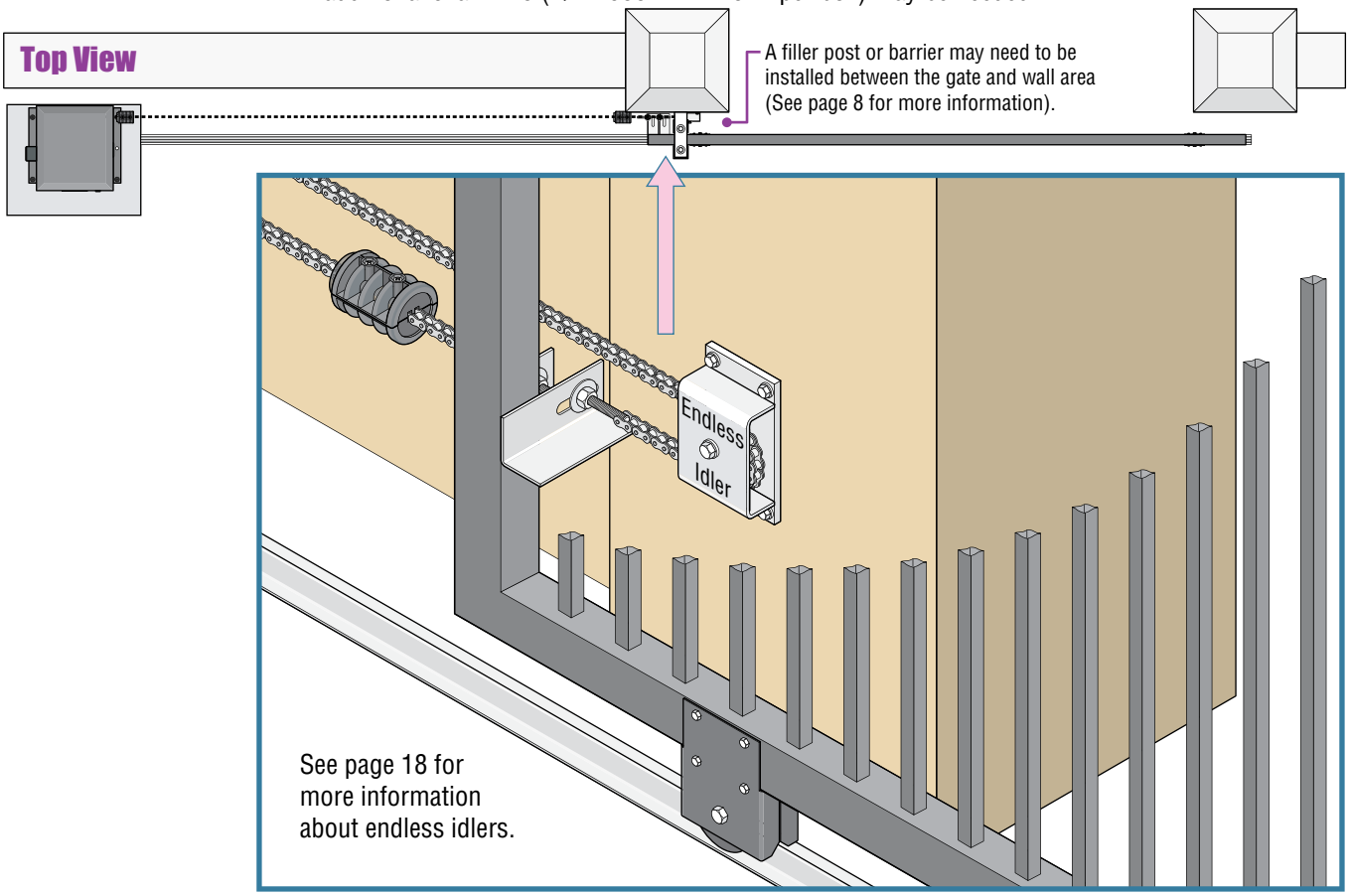

Rear Position with Post Mount

Hides the chain from outside the property looking in.

- Chain setup is the same as above.

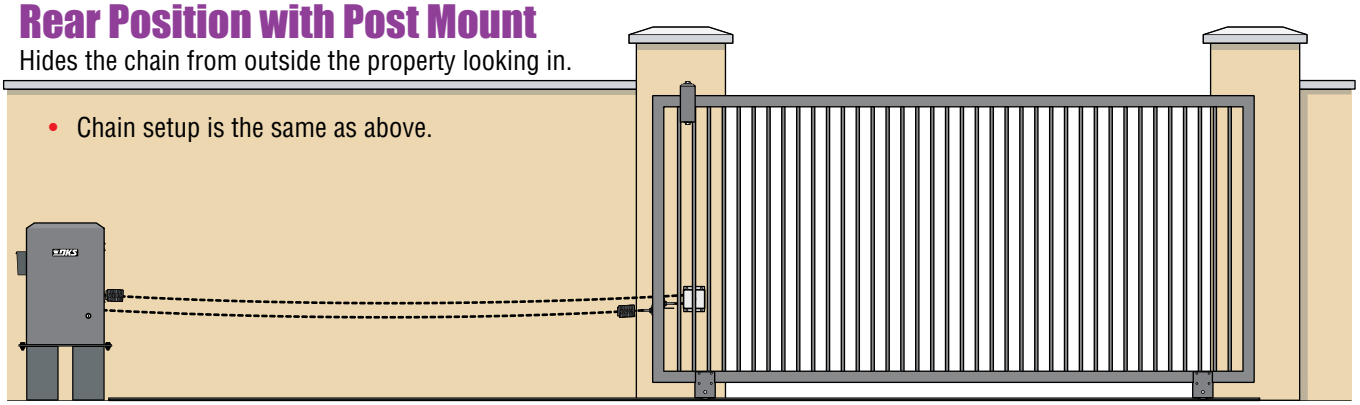

Additional hardware required. Post base plate (P/N 2600-495) 6 x 6 steel posts not available from DoorKing.

Center Position with Post Mount

Hides the chain from outside the property looking in. Optional chain tray kit can be used and is recommended for gates over 20 ft, supports the chain's weight and helps prevent chain "stretching". See page 19 for more information.

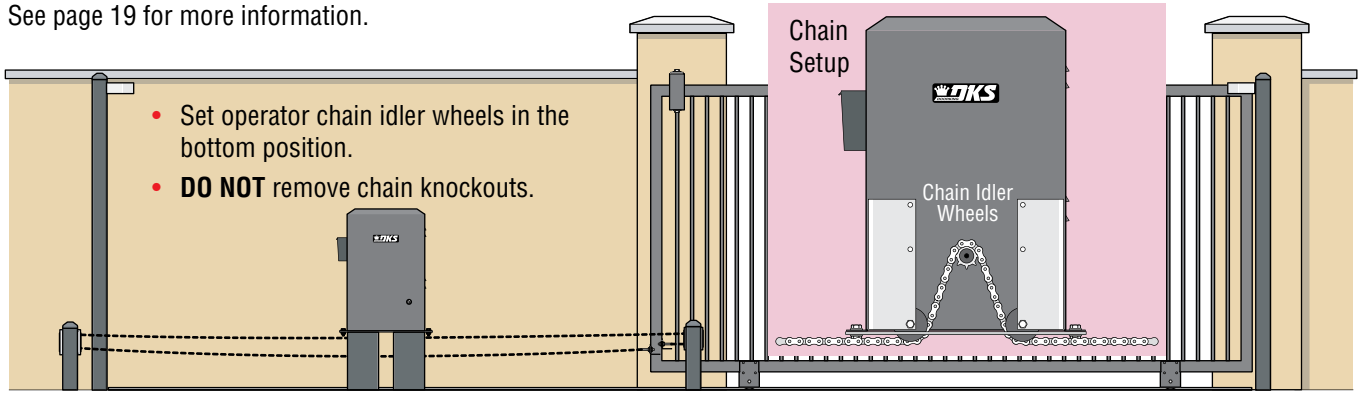

- Set operator chain idler wheels in the bottom position.
- **DO NOT** remove chain knockouts.

Additional hardware required. Post base plate (P/N 2600-495) 6 x 6 steel posts not available from DoorKing. Endless idler assembly (P/N 2600-818). Additional chain #40 (P/N 2600-442 - 20 ft. per box). Gate end retainer (P/N 1204-004).

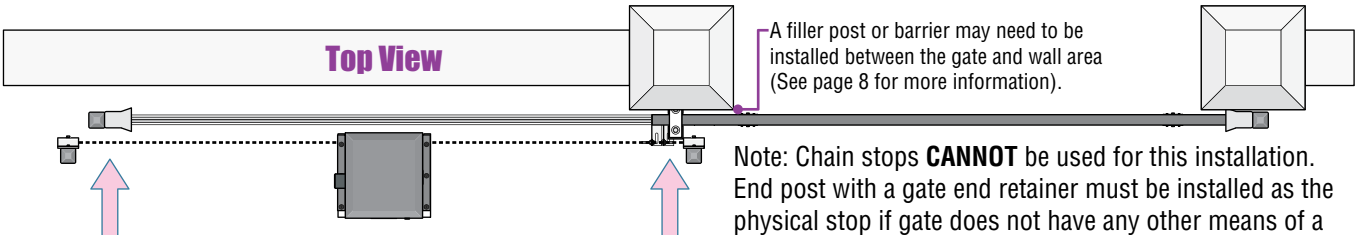

Note: Chain stops **CANNOT** be used for this installation. End post with a gate end retainer must be installed as the physical stop if gate does not have any other means of a physical stop in the open and close position.

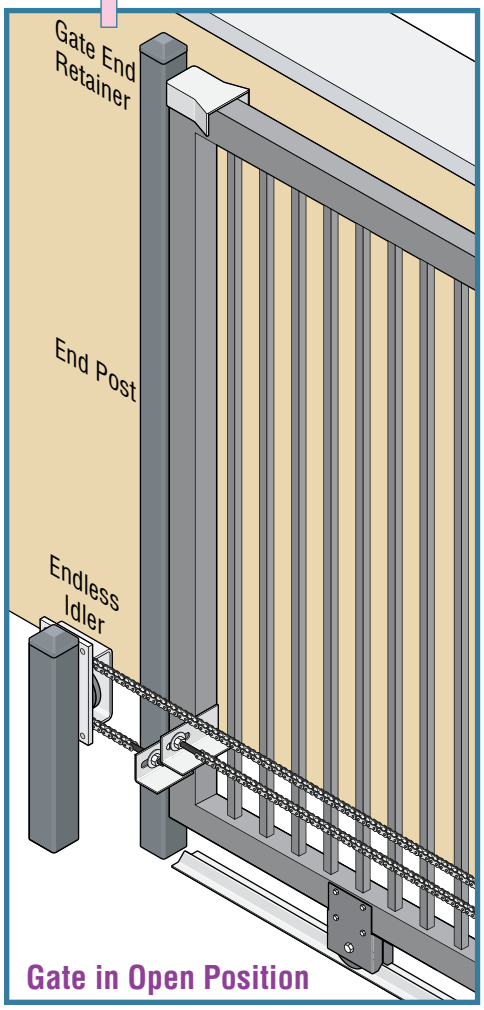

Gate in Open Position

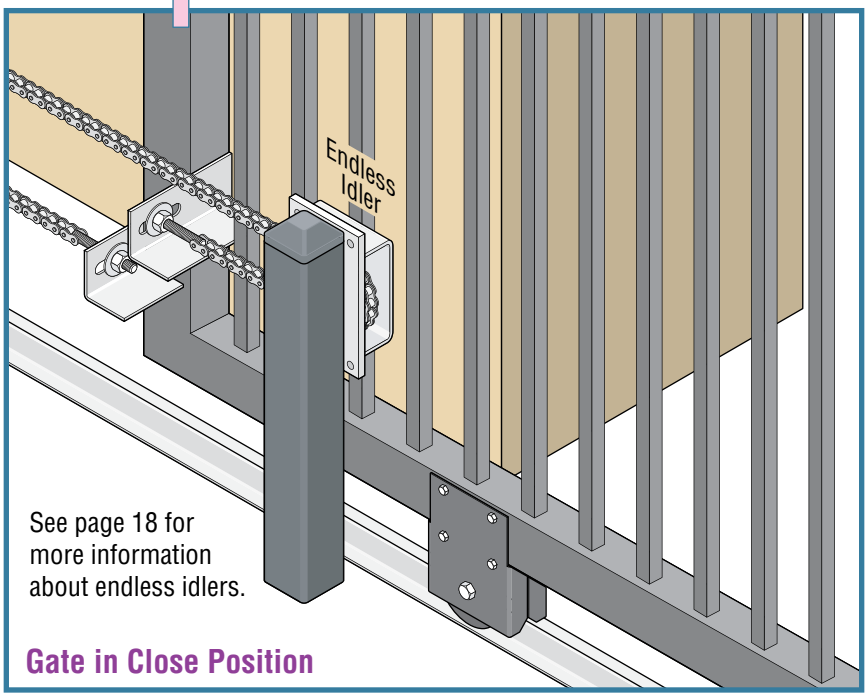

See page 18 for more information about endless idlers.

Gate in Close Position

Gate shown in open position.

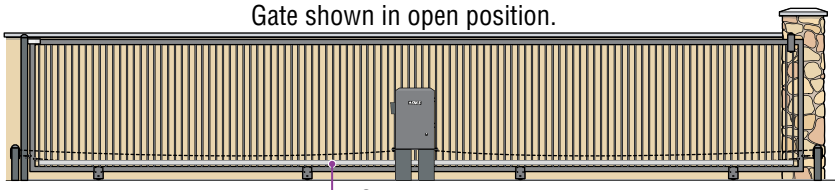

Optional Chain Tray Kit for Long Gates

Optional chain tray kit (P/N 2601-270) can be used and is recommended for gates over 20 ft, see page 19 for more information.

Front or Rear Position Upside Down

Can be mounted on the ceiling to conserve floor space.

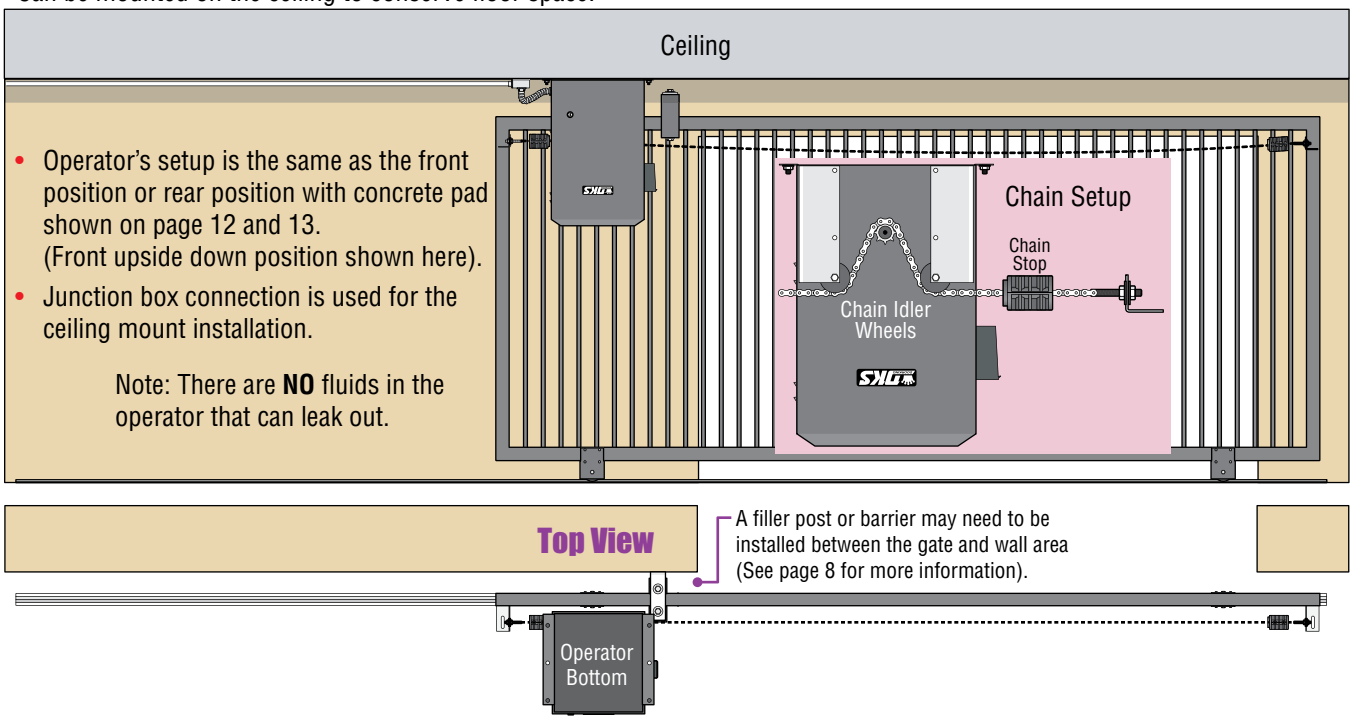

- Operator's setup is the same as the front position or rear position with concrete pad shown on page 12 and 13. (Front upside down position shown here).
- Junction box connection is used for the ceiling mount installation.

Note: There are **NO** fluids in the operator that can leak out.

1.5 Underground Conduit Requirements

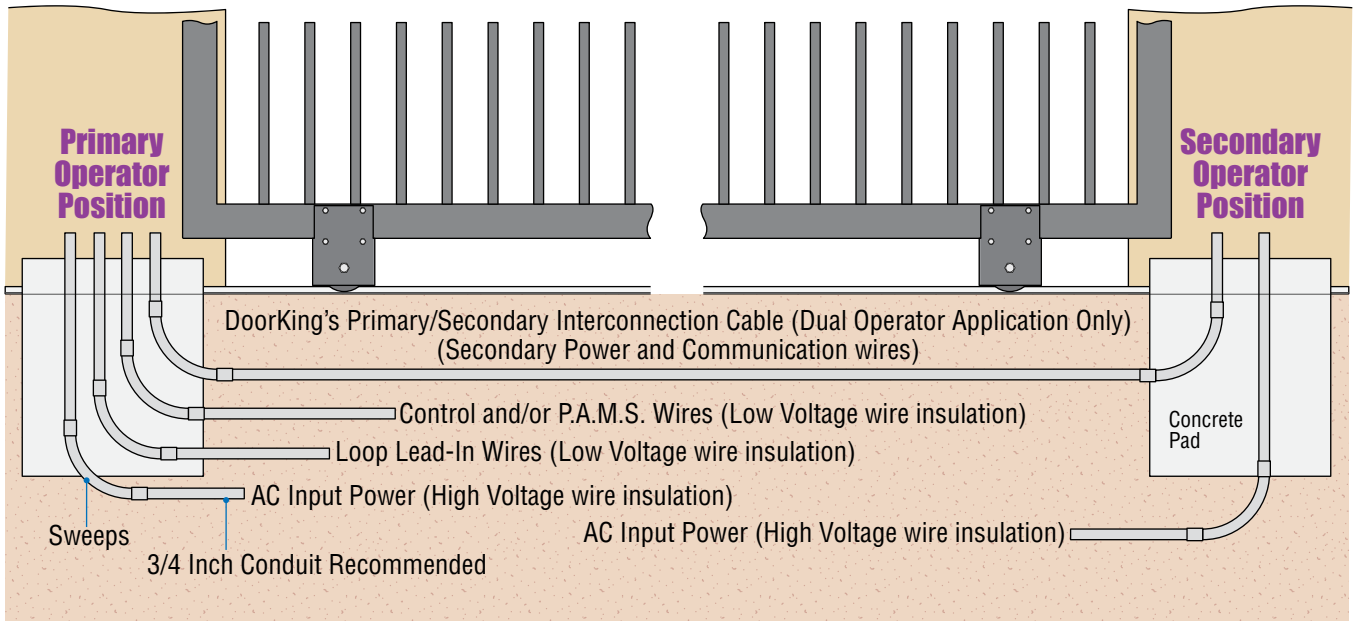

- The conduit requirements are for a typical slide gate operator installation (the secondary operator is shown for those applications where a secondary operator may be used). **The conduit requirements for your application may vary from this depending on your specific needs.**
- Use only sweeps for conduit bends. Do not use 90° elbows as this will make wire pulls very difficult and can cause damage to wire insulation.
- DoorKing recommends using 3/4-inch conduit.
- Be sure that all conduits are installed in accordance with local codes.
- **Never** run low voltage rated wire insulation in the same conduit as high voltage rated wire insulation.

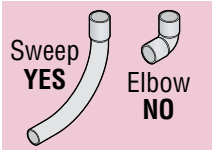

1.6 Pad, Post or Ceiling Mount without/with J-Box Setup

Pad Mount with Conduit

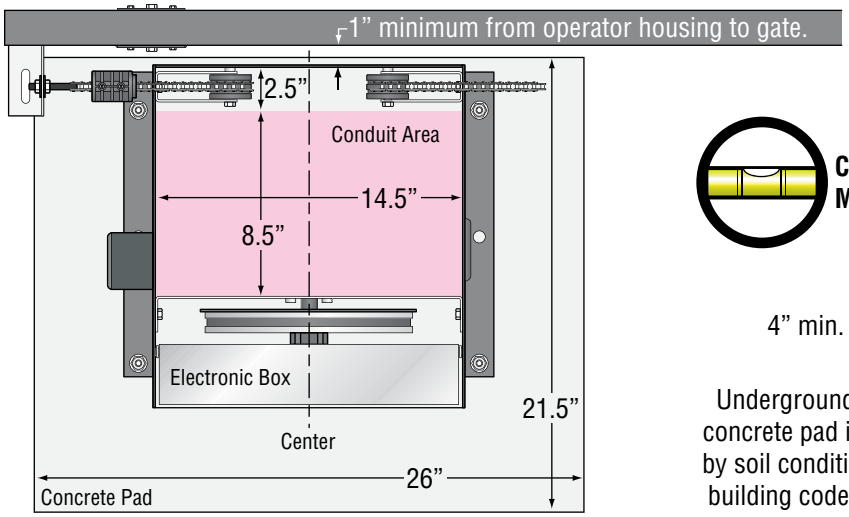

Concrete pad MUST be level.

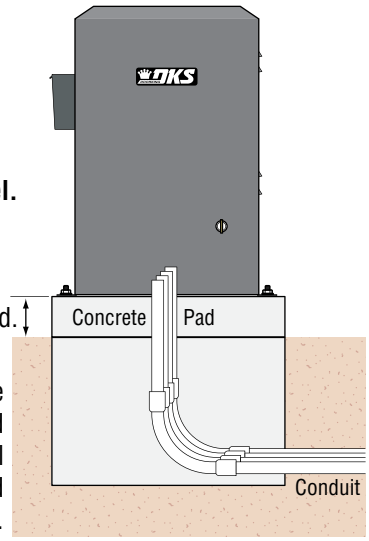

Underground depth of the concrete pad is determined by soil conditions and local building codes. Reinforced concrete recommended.

Post Mount with Conduit

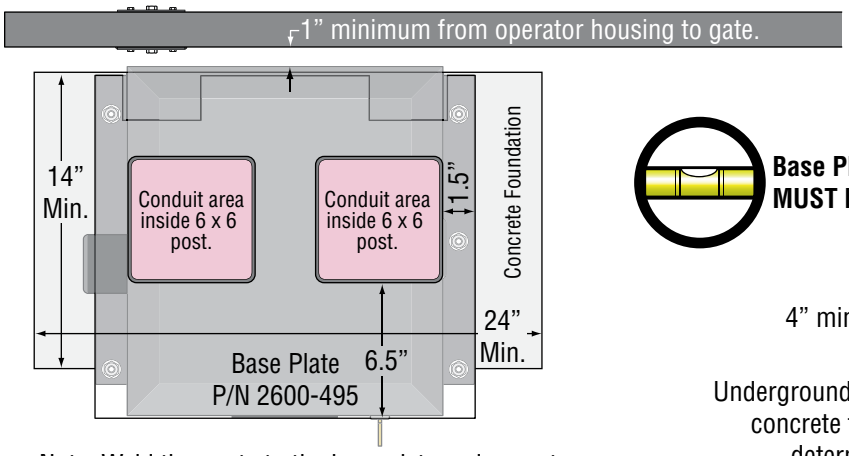

Note: Weld the posts to the base plate and mount assembly into concrete **BEFORE** attaching the operator. Conduit runs up through 6 x 6 steel posts.

Base Plate MUST be level.

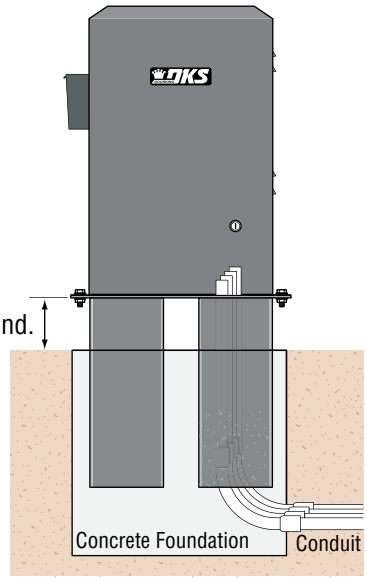

Underground depth of the concrete foundation is determined by soil conditions and local building codes. Reinforced concrete recommended.

Pad, Post or Ceiling Mount Connected with Junction Boxes

All wire connections can be made on **either side** of the operator housing after it has been installed.

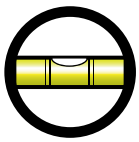

Operator MUST be level.

Note: Operator must be mounted 1” min. away from gate.

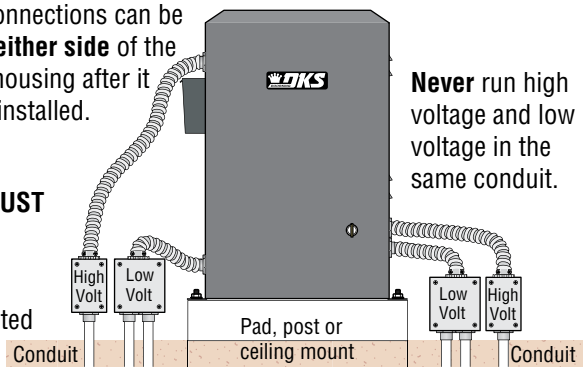

Never run high voltage and low voltage in the same conduit.

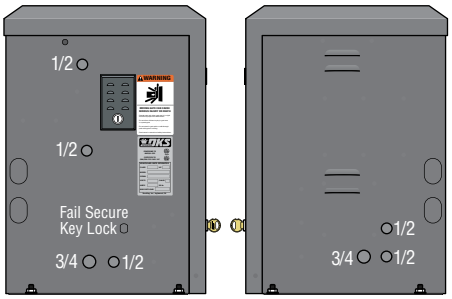

Conduit Knock-Out Sizes

1.7 Mounting Operator and Chain

Prior to mounting the operator, be sure that the correct chain knockouts have been removed and chain idler wheels are in the correct position (top, center or bottom).

Fail-Secure Manual Release Kit Installation Note: It is easier to install the 2600-865 fail-secure manual release kit **before** mounting the operator and attaching the chain. Refer to the instruction sheet supplied with the kit for installation.

Positioning Operator and Chain Brackets

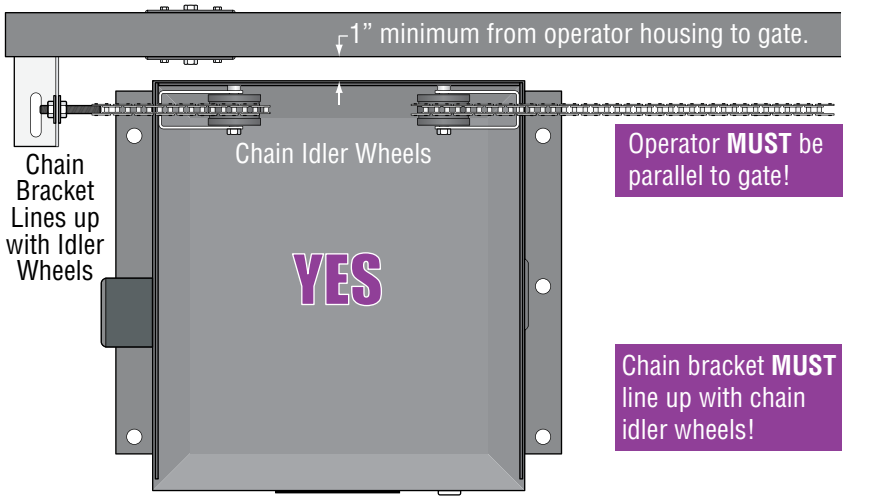

Operator **MUST** be parallel to gate!

Chain bracket **MUST** line up with chain idler wheels!

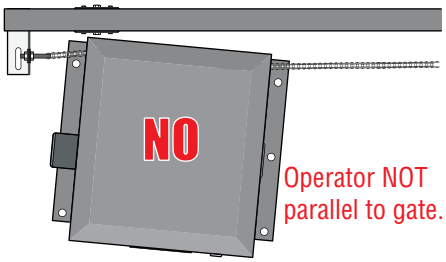

Operator NOT parallel to gate.

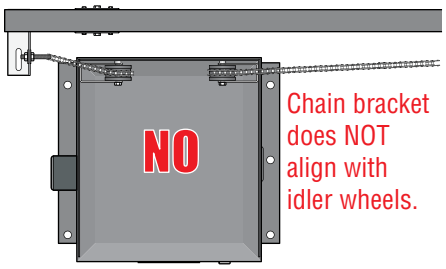

Chain bracket does NOT align with idler wheels.

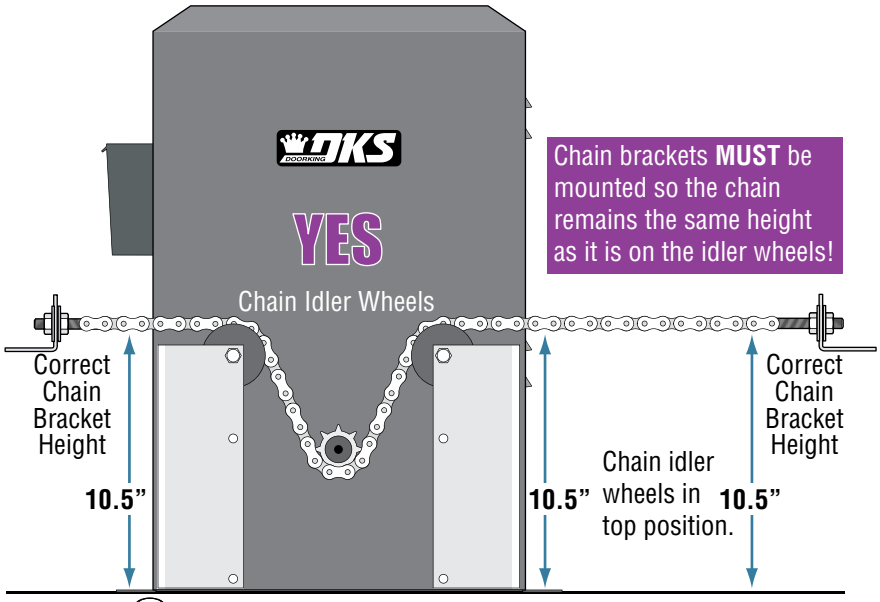

Chain brackets **MUST** be mounted so the chain remains the same height as it is on the idler wheels!

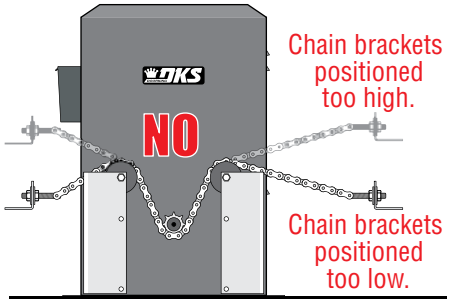

Chain brackets positioned too high.

Chain brackets positioned too low.

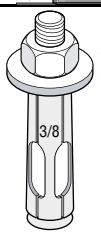

Attaching Operator to Concrete

DoorKing recommends a minimum of four (4) 3/8" x 2" sleeve anchors (not supplied).

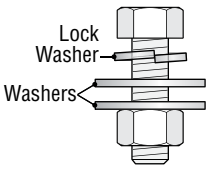

Attaching Operator to Post Base Plate

Use six (6) 1/2"-13 x 1 1/2" bolts, lockwashers and nuts (not supplied).

Connect Chain Bracket to Gate. Weld completely around bracket. Chain nut and chain bolt **MUST NOT** protrude past gate frame.

Connect Chain to Chain Bracket. Connect chain to chain bolt with master link. Adjust the chain nuts to tighten the chain. The chain should sag no more than one (1) inch per 10 feet of travel. **Do not over tighten the chain.**

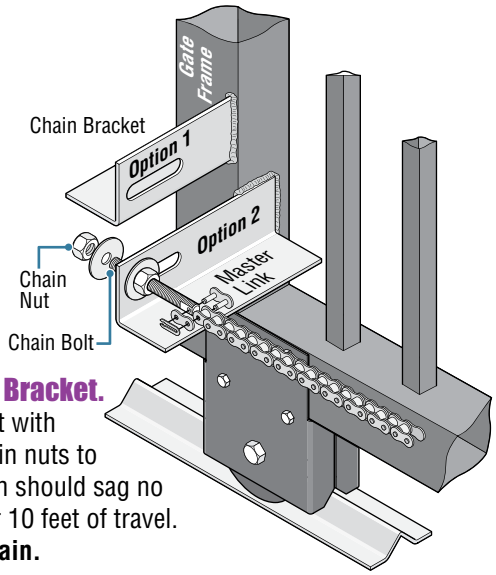

Endless Idler Assembly (On Select Installations)

DoorKing offers an endless idler assembly with a protective cover designed for the Model 9150 installations (P/N 2600-818). Make sure the endless idler assembly is **securely** fastened to the wall or post (Depending on which type of installation will be used). Extreme force will be exerted on this assembly during gate cycling.

Center and Rear Mount Positions (Top View)

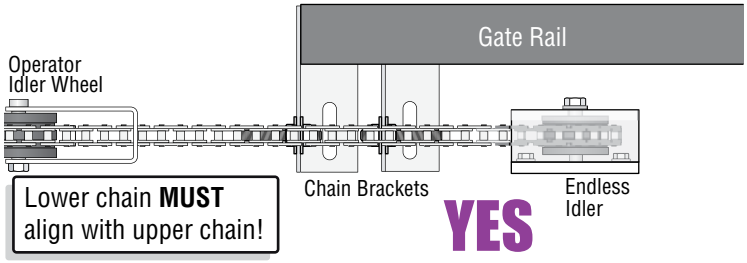

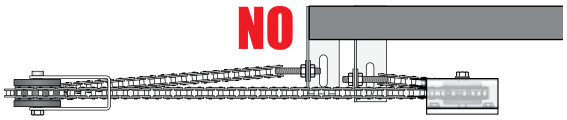

Lower chain does NOT align with upper chain.
Note: Be sure that the chain is aligned and parallel to the gate. Installing the chain in any other manner will cause excessive noise, chain idler wheel wear and chain stretching.

Center Mount Position (Side View)

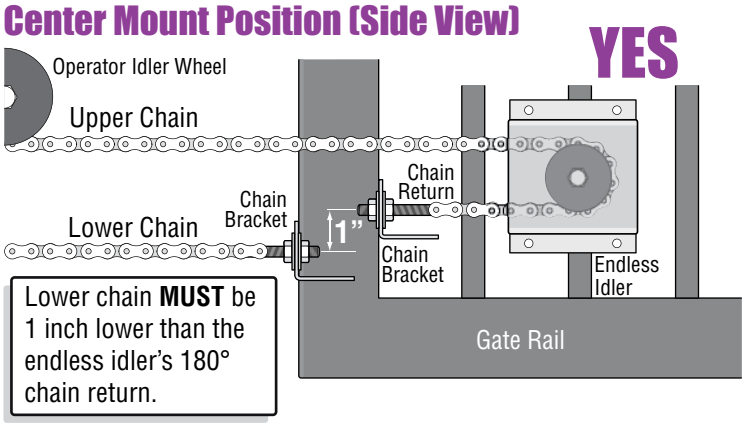

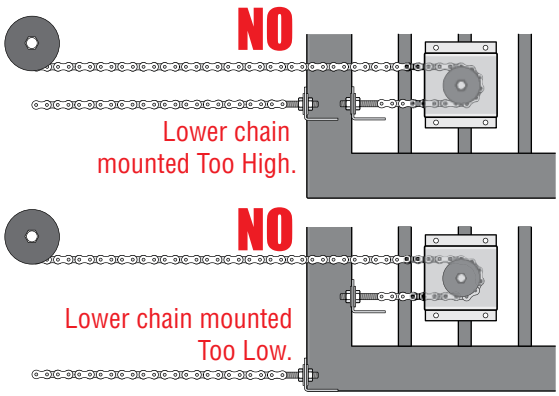

Rear Mount Position (Side View)

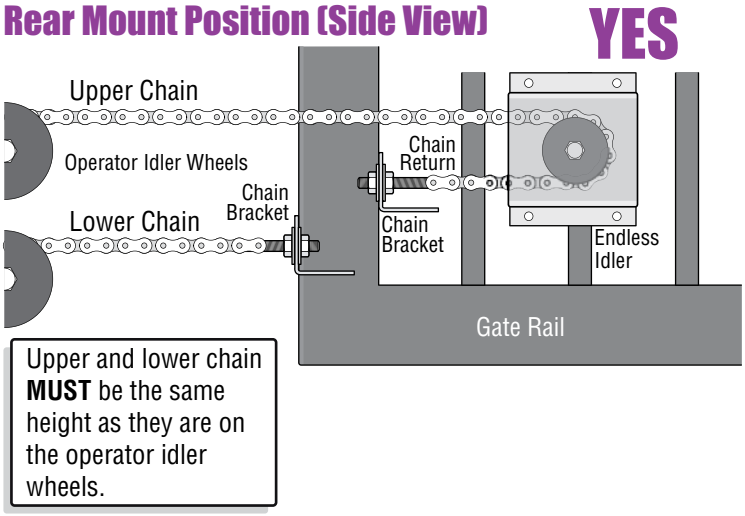

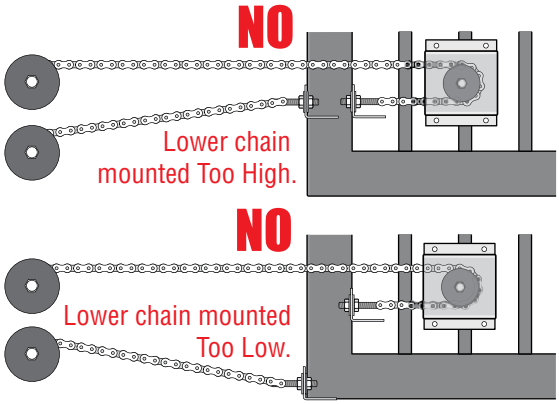

1.8 Installation of Warning Signs

This DoorKing Slide Gate Operator is shipped with two warning signs. The purpose of the warning sign is to alert uninformed persons, and to remind persons familiar with the gate system, that a possible hazard exists so that appropriate action can be taken to avoid the hazard or to reduce exposure to the hazard. See page 9 for suggested mounting positions of signs.

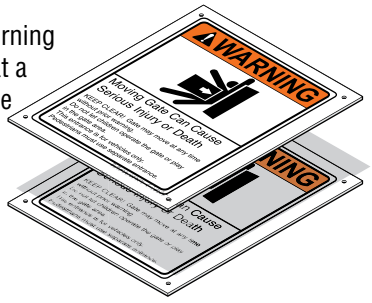

- **Permanently install the supplied warning signs in locations so that the signs are visible by persons on both sides of the gate.**
- Use appropriate hardware such as wood or sheet metal screws (not supplied) to install the warning signs.

1.9 Chain Tray Kit

Installing the Chain Tray Kit

A chain tray is recommended for gates longer than 20 ft. to support the weight of the chain. DoorKing offers a chain tray kit in sections to fit any length gate. (DoorKing P/N 2601-270 10 Ft. section)

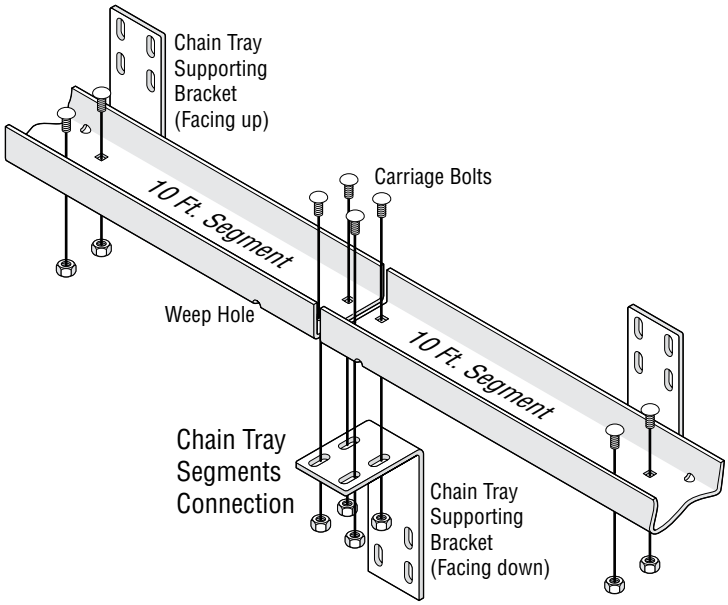

Tip: Chain tray supporting brackets can be mounted facing up (as shown on right), facing down or extended depending on the chain height and position. For further information, refer to instructions provided with the chain tray kit.

Note: The chain should sag at least one (1) inch per 10 feet of travel.

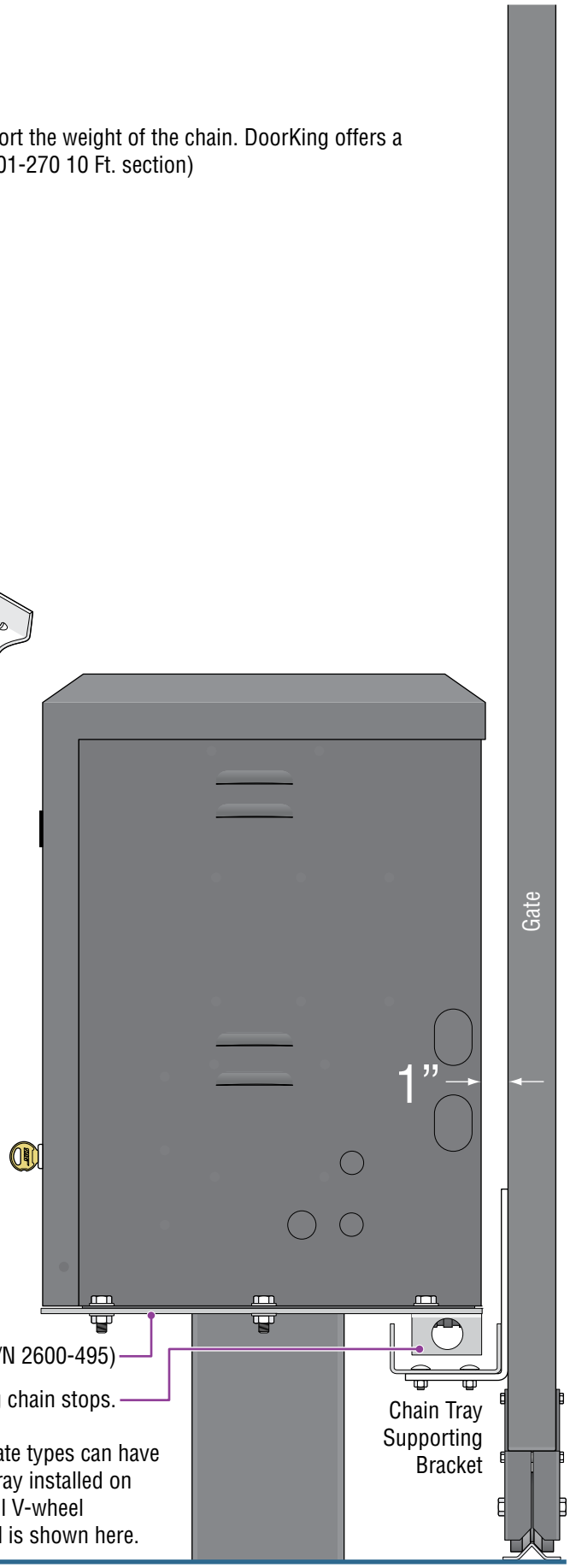

Note: All gate types can have the chain tray installed on them, V-rail V-wheel ornamental is shown here.

SECTION 2 - AC POWER TO OPERATOR(S)

Before attempting to connect any wiring to the operator, be sure that the circuit breaker in the electrical panel is in the OFF position. Permanent wiring must be installed to the operator as required by local electrical codes. It is recommended that a licensed electrical contractor perform this work.

Since building codes vary from city to city, we highly recommend that you check with your local building department prior to installing any permanent wiring to be sure that all wiring to the operator (both high and low voltage) complies with local code requirements.

THIS GATE OPERATOR MUST BE PROPERLY GROUNDED!!

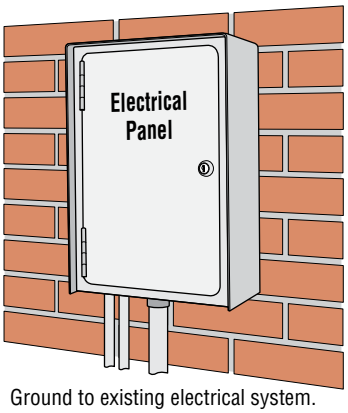

Ground to existing electrical system.

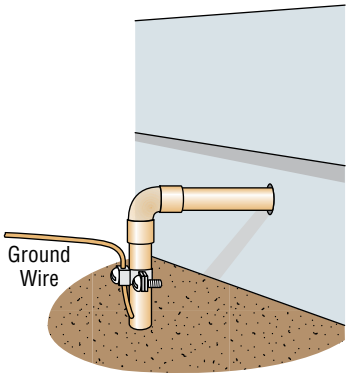

Ground to metallic cold water pipe.

IMPORTANT: Ground wire shown without safety protection for clarity. Make sure ground wire is protected from being touched or electrical shock could occur!

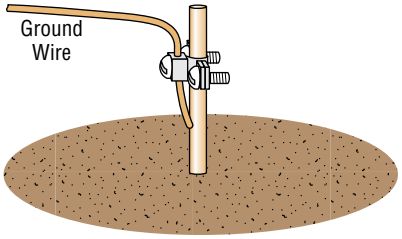

Grounding rod 10 feet in soil.

Typical Grounding Sources

2.1 High Voltage Wire Runs

If power wiring is greater than the maximum distance shown, it is recommended that a service feeder be installed. When large gauge wire is used, a separate junction box must be installed for the operator connection. The wire table is based on stranded copper wire. Wire run calculations are based on a AC power source with a 3% voltage drop on the power line, plus an additional 10% reduction in distance to allow for other losses in the system.

Never run low voltage rated wire insulation in the same conduit as high voltage rated wire insulation.

This table illustrates the high voltage AC power wire size and distance limitations.

Model - Motor Voltage - Motor HP - Motor Amps	Wire Size / Max Distance in Feet			
	12 AWG	10 AWG	8 AWG	6 AWG
Single 9150 - 115 VAC - 1/2 HP - 5.4 Amps	170	275	460	685
Dual 9150s - 115 VAC - 1/2 HP - 5.4 Amps each, Single Power Source	85	135	230	340
Single 9150 - 115 VAC - 1 HP - 9.7 Amps	100	170	280	520
Dual 9150s - 115 VAC - 1 HP - 9.7 Amps each, Single Power Source	50	85	140	260

"Optional" High Voltage Kit Installation Note: When installing the high voltage kit for 208/230/460/575 VAC input power, refer to the **"high voltage AC power wire size and distance limitations"** table on the instruction sheet with the high voltage kit (P/N 2600-266) for AC power wire run limitations.

"Optional" Heater Installation Note: When installing a heater, refer to the **"high voltage AC power wire size and distance limitations"** table on the instruction sheet with the heater kit for AC power wire run limitations.

2.2 High Voltage Terminal Connection

- Route incoming AC power wire through the high voltage conduit and run wire in the operator as shown.
- Be sure wiring is installed in accordance with local codes. Be sure to color code all wiring.
- It is recommended that a surge suppressor be installed on the high voltage power lines to help protect the operator and circuit board from surges and power fluctuations.
- Dual operators (Primary/Secondary) require AC power to each operator.

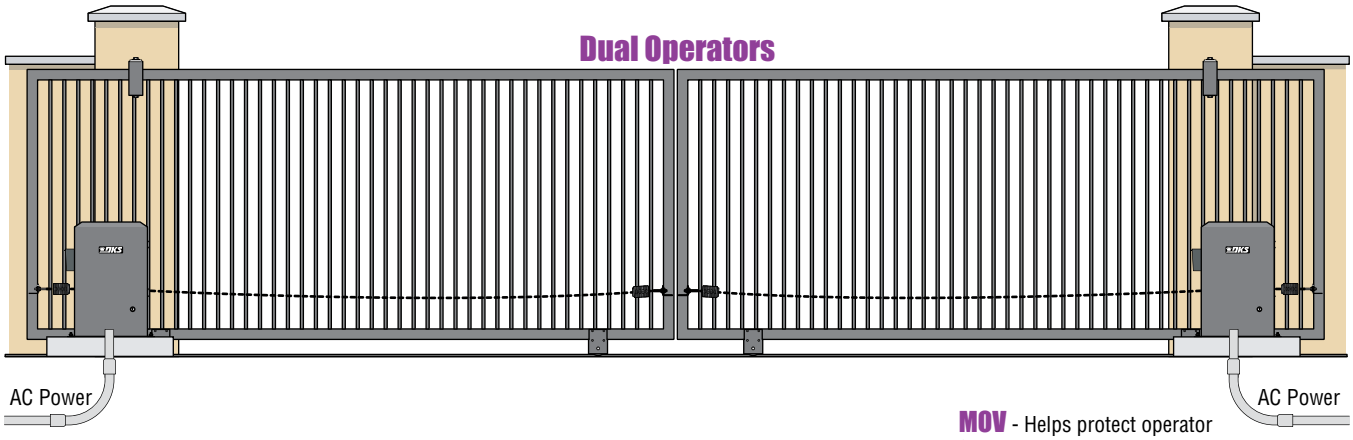

MOV - Helps protect operator from power surges.

DO NOT power up and cycle the operator until the "**Physical stops**" have been installed. **Damage could occur to the gate and operator.**

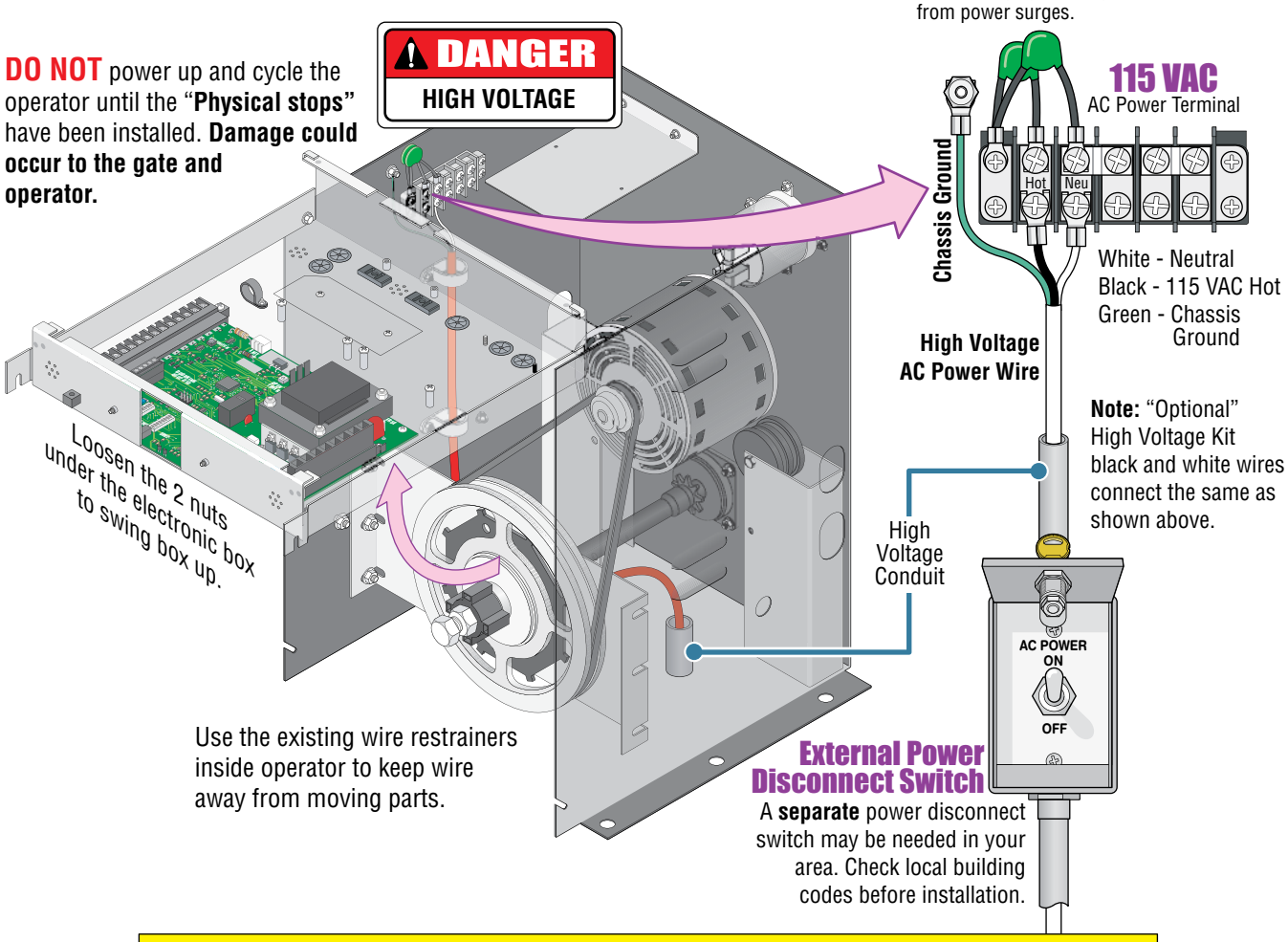

Every time the 9150 is powered up, the **First** open command will automatically run "**Multiple gate cycles**" that will locate and remember the gate's open and close positions (See page 25).

SECTION 3 - ADJUSTMENTS

The switch settings and adjustments in this chapter should be made after your installation and wiring to the operator(s) is complete. **Whenever any of the programming switches on the circuit board are changed, power must be shut-off, and then turned back on for the new setting to take effect. Every time** the 9150 is powered up, the **First** open command will automatically run "**Multiple gate cycles**" that will locate and remember the gate's open and close positions (See page 25).

3.1 4602 Circuit Board Description and Adjustments

Surface Mounted LEDs Indicates that low voltage power is applied to the circuit board. **Input LEDs** should be OFF and will only illuminate when the input is activated. **Pulse LEDs** will blink as the operator is running. They can be either ON or OFF when the operator is stopped.

Auto-Close Timer

Auto-close timer (when turned on) SW 1, switch 2.

Adjust from 1 second (full counter clockwise) to approximately 23 seconds (full clockwise).

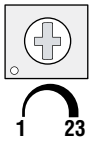

Key Switch

Cycles the operator when pressed. Gate opens to full open position ONLY.

Dry Relay Contact

Dry relay contacts (terminals 15-16) can be set for Normally Open (NO) or Normally Closed (NC) operation by placing the relay shorting bar on the N.O. or N.C. pins respectively. SW 1, switches 4 and 5 must be set to control relay. See next page for descriptions.

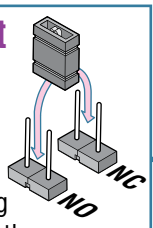

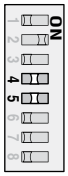

Self-Test

Self-test (when turned on) SW 1, switch 6.

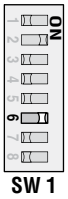

CAUTION

Do not run self-test with the operator connected to the gate. The drive chain must be disconnected before running the self-test. This feature is designed for bench testing **ONLY**.

Dual Channel Loop Detector

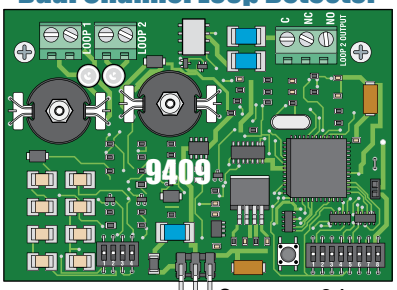

Single Channel Loop Detector

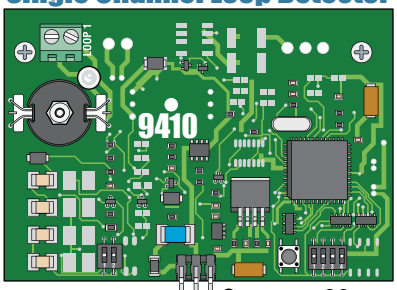

Exit Loop Port See page 34.

Reverse Loop Port See page 30.

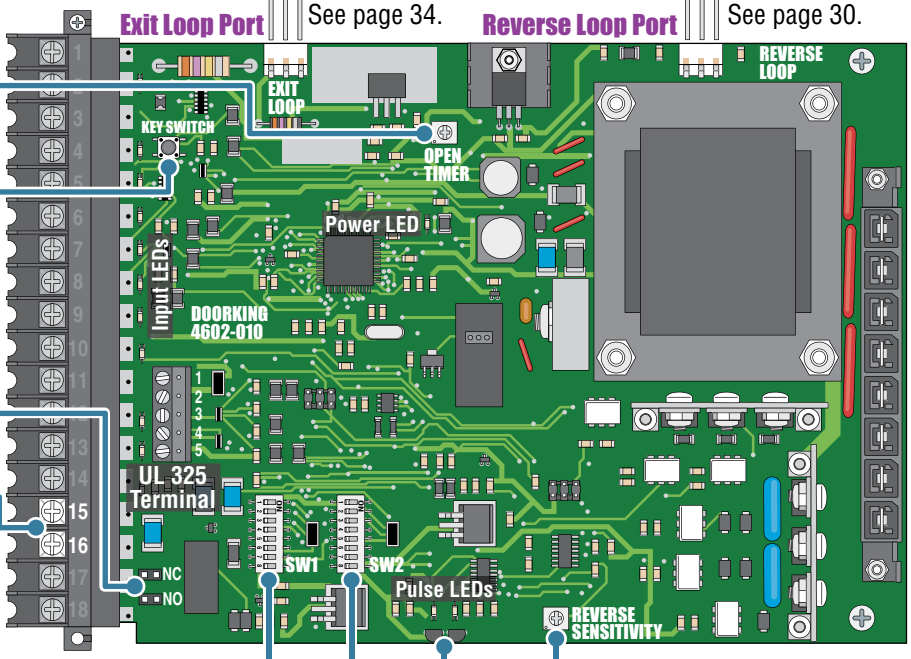

Magnetic Sensors See page 26.

DIP-Switches

Set the DIP-switches on the circuit board to the desired setting. See switch setting charts on next 2 pages.

Typical Settings

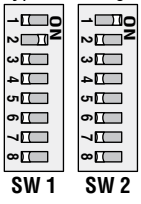

Inherent Reverse Sensor

Adjust reversing sensitivity. Full counter clockwise for minimum sensitivity, full clockwise for maximum sensitivity. See page 26.

3.2 DIP-Switch SW 1 and SW 2 Settings

The two DIP-switches located on the circuit board are used to program the operator to operate in various modes and to turn on or off various operating features. Whenever a switch setting is changed, power to the operator must be turned OFF and then turned back on for the new setting to take affect. Check and review ALL switch settings prior to applying power to the operator.

⚠ **Every time** the operator is powered up, the **First** open command will automatically run "**Multiple gate cycles**" that will locate and remember the gate's open and close positions (See page 25).

SW 1 (Left 8 Switches)

Switch	Function	Setting	Description
1	Changes the direction the operator will open/close the gate depending on the different chain configurations. 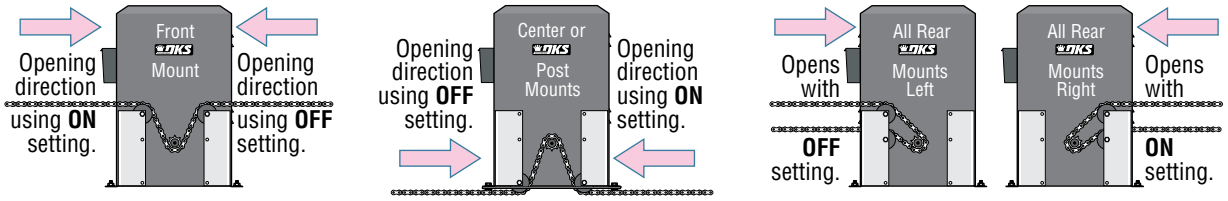		
2	Auto-Close Timer	OFF	Auto-close timer is OFF. Manual input required to close gate.
		ON	Auto-close timer is ON. Adjustable from 1-23 seconds to close gate.
3	Motor Hold	OFF	**Normal Setting.** No voltage to motor when gate is stopped (Level gate).
		ON	Voltage applied to motor always. Keeps inclined gate from coasting when stopped.
4 and 5	Relay Activation and LED Indicator Light Activation	4-OFF 5-OFF	Relay activates and LED is ON when the gate is fully open.
		4-OFF 5-ON	Relay activates and LED is ON when the gate is not closed.
		4-ON 5-OFF	Relay activates and LED is ON when the gate is opening and open.
		4-ON 5-ON	Relay activates and LED is ON when the gate is opening and closing.
6	Self-Test	OFF	**Normal Setting.**
		ON	Runs self-test. **Caution: Bench testing ONLY!**
7 and 8	Gate **Open** Back-Off Position	7-OFF 8-OFF	**Normal Setting.** Gate fully opens.
		7-OFF 8-ON	Gate stops short 1" from full open position. Used for a reversing edge device.
		7-ON 8-OFF	Gate stops short 2" from full open position. Used for a reversing edge device.
		7-ON 8-ON	Gate stops short 3" from full open position. Used for a reversing edge device.

SW 1 Switch 1 **Must OPEN** the gate upon initial AC power up and open command. If the first open command begins to close the gate, turn AC power off and reverse this switch. Opening direction will vary depending on the type of installation (See above).

SW 1 Switch 2 Turns the auto-close timer on or off. Can be adjusted from 1 to 23 seconds to close gate.

SW 1 Switch 3 This switch should be left in the OFF position when the slide gate is running on a level track and the gate does not coast after it has stopped. If the gate is on an incline, turning this switch on will apply a small DC voltage to the motor windings after the gate has stopped. This applies braking power to the motor to prevent the gate from "coasting" after it has stopped.

SW 1 Switches 4-5 These work in conjunction with each other and determine when the relay on the board will be activated. This relay can be used as a switch for various functions such as illuminating a warning light when the gate is moving, or turning on a green light when the gate is full open. If a magnetic lock is used with the gate operator, these switches must be set for magnetic lock operation which limits the relay to activate only when the gate is opening and full open.

SW 1 Switch 6 This switch is a self-test feature that checks various functions of the circuit board and is used for bench test only. **Do not run this test with the operator connected to the gate.**

SW 1 Switches 7-8 These work in conjunction with each other and determine if the operator will stop the gate at the full open position, or if the gate should stop 1, 2 or 3 inches short of the full open position. Needed only when using a reversing edge entrapment protection device on the **opening** edge of the gate with an end post as the physical stop.

3.2 Continued

SW 2 (Right 8 Switches)			
Switch	**Function**	**Setting**	**Description**
1	Exit Loop Port Output	Jumper Wire Needed OFF	A plug-in exit loop detector plugged into the EXIT Loop port will partially open single operator or fully open dual operators depending on type of loop detector used).
	Full Open Input	ON	**Normal Setting.** Plug-in exit loop detector will fully open gate (Single operator).
2	Reverses Gate	OFF	**Normal Setting.** Input to terminal #6 and/or reverse loops will **reverse** gate during **close** cycle.
	Stops Gate	ON	Input to terminal #6 and/or reverse loops will **stop** gate during **close** cycle – gate will continue to close after input to terminal #6 and/or reverse loops are cleared (Helps prevent tailgating vehicles from unauthorized entry).
3	Partial Open (14 Ft)	OFF	**Normal Setting.** Switch must be OFF for terminal #5 input to open gate 14 Ft.
		ON	**DO NOT** use ON setting. **NOT** associated with partial open feature for the 9150.
4	Built-in Solenoid Lock	OFF	**Normal Setting.** Fail-safe logic. Lock engages only if attempt is made to force gate open (Factory setup).
		ON	Fail-secure logic. Lock engages after each gate cycle (2600-865 Lock kit required).
5	Operator Model Select	OFF	**Normal Setting.** Switch must be OFF for Model 9150.
		ON	**DO NOT** use ON setting for Model 9150.
6	Quick-Close Timer Override	OFF	**Normal Setting.** Timer will function normally.
		ON	Opening gate will stop and begin to close as soon as all reversing inputs (Reverse loops, photo sensors) are cleared regardless of the distance the gate has opened.
7 and 8	Gate **Close** Back-Off Position	7-OFF 8-OFF	**Normal Setting.** Gate fully closes.
		7-OFF 8-ON	Gate stops short 1" from full close position. Used for a reversing edge device.
		7-ON 8-OFF	Gate stops short 2" from full close position. Used for a reversing edge device.
		7-ON 8-ON	Gate stops short 3" from full close position. Used for a reversing edge device.

SW 2 Switch 1 Switch 1 **ON**, plug-in exit loop detector is a **normal full open** input. Switch 1 **OFF**, the normal exit loop port function is bypassed and a jumper wire is needed to open and close gate(s) for certain applications (Single operator automatic exit loop **partial** open or dual operator application) depending on the type of loop detector used and position of jumper wire.
SW 2 Switch 2 Determines if an input to terminal #6 (Photo Sensors) **AND/OR** reverse loops will reverse **OR** stop a **CLOSING gate**. A tailgating vehicle **can activate** terminal #6 (Photo sensors) and/or reverse loops **while** the gate is in the closing cycle from the previous vehicle's authorized entry:
If switch 2 is turned **OFF** (Reverse), the closing gate that gets activated by a tailgating vehicle will reverse back to the open position, possibly allowing the tailgating vehicle **unauthorized entry while the gate is reversing back to the open position**.
If switch 2 is turned **ON** (Stop), the closing gate that gets activated by a tailgating vehicle will stop, partially or completely blocking the pathway, **NOT** allowing the tailgating vehicle to enter without proper authorization. The gate will not move until all sensors are clear, usually forcing the tailgating vehicle that activated the sensors to back away from the gate. The gate will then continue until closed, helping prevent the tailgating vehicle from unauthorized entry.
SW 2 Switch 3 Switch **must** be in the **OFF** position. Inputs connected to terminal #5 will open and reverse the gate only 14 Ft.
SW 2 Switch 4 This switch determines the operation of the built-in solenoid lock. The OFF setting is the factory setup. **Caution: Do not set this switch to ON unless the 2600-865 fail-secure manual release kit has been installed in the operator.** Changing this switch to the ON setting without installing the lock kit will damage the operator. See pages 37 and 38 for more information about Fail-Safe vs. Fail-Secure release systems.
SW 2 Switch 6 Turning the quick-close feature on will cause the auto-close timer to close the gate after 1 second, regardless of the setting of the auto-close timer potentiometer. This will also cause an **opening gate** to stop and reverse when the reverse loops and/or photo sensors are cleared. This feature, along with turning SW 2, switch 2 **ON** above, is useful to help prevent tailgating vehicles from unauthorized entry.
SW 2 Switches 7-8 These work in conjunction with each other and determine if the operator will stop the gate at the full close position, or if the gate should stop 1, 2 or 3 inches short of the full close position. Needed only when using a reversing edge entrapment protection device on the **closing** edge of the gate with an end post as the physical stop.

3.3 Automatic Open / Close Limit Adjustment

The 9150's open/close limits **DO NOT** have to be physically adjusted. **Every time the 9150 is powered up, the first open command will automatically run "Multiple gate cycles" that will locate and remember the gate's open and close positions.** These positions are determined by the physical stops that have been installed (See section 1.2, page 10).

Timer: The Auto-Close Timer should be turned ON (SW 1, switch 2) to allow the "multiple gate cycles" to run automatically, otherwise manual close commands will be required to complete this sequence.

Clutch: The clutch's factory setting will work correctly for most installations. The clutch must **NOT** slip while the gate is cycling **between** the full open and full closed position or the gate limits will be incorrect. If the clutch slips during this period, it must be tightened before running this sequence (See section 3.4 on the next page).

Safety Devices: Run this sequence **before** testing any safety features (primary inherent reverse sensor, secondary entrapment protection, entrapment alarm and reset features).

Reversing Edge mounted on the Gate using End Posts: When using a reversing edge on either end of the gate with **an end post as the physical stop**, the reversing edge must be disconnected from the circuit board **everytime** this sequence will be run (the UL 325 terminal can be unplugged from the circuit board).

Sequence of Automatic "Multiple Gate Cycles" to Set Gate Limits

⚠ CAUTION: Keep pedestrians and vehicles clear of the gate while this sequence is running!

After the first open command is given to the operator (gate can be in any position)**:**

"Multiple Gate Cycles"

Open — Gate **MUST** open until it contacts the **physical "open" stop**. (if gate starts to close, turn power off and change the direction operator opens (SW 1, switch 1). Turn power back on and give open command again).

Close — Auto-close timer will close the gate until it contacts the **physical "close" stop**. (Manual close command required if timer is turned off).

Open — Gate will automatically open until it gets approximately 12 inches away from the full open position and stop, then continue opening until it contacts the **physical "open" stop** again.

Close — Auto-close timer will close the gate until it gets approximately 12 inches away from the full close position and stop, then continue closing until it contacts the **physical "close" stop** again. (Manual close command required if timer is turned off).

Sequence Finished — Open and close gate positions are now set and will be remembered by the 9150 (until it loses AC power). **Gate will function normally** after automatic "Multiple Gate Cycles" sequence has finished.

Note: If gate encounters an obstruction during this sequencing, it will automatically continue after obstruction has been cleared.

3.4 Clutch Adjustment

In addition to the inherent reverse sensor, this operator is equipped with a mechanical slip clutch (UL 325 Type C) to further reduce the possibility of injury should an entrapment occur. **DO NOT** over tighten the clutch to compensate for a gate that is damaged, poorly constructed or too heavy. **Over tightening the clutch would create a hazard** which could result in serious injury or death to persons who may become entrapped.

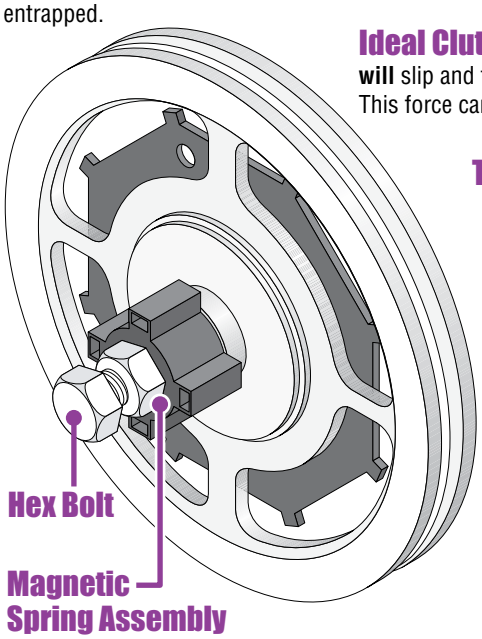

Hex nut is connected to black plastic magnet holder.

Ideal Clutch Adjustment: The operator will cycle the gate **without** the clutch slipping. The clutch **will** slip and the gate will reverse **ONLY** after striking an obstruction with no more than 75 Lbs of force. This force can be measured with a gate scale, DoorKing P/N 2600-225.

To adjust clutch:

1. Make sure power to operator is OFF when adjusting clutch.
2. Hold large pulley to loosen the hex bolt counter clockwise.
3. Magnetic spring assembly can now be loosened (counter clockwise) or tightened (clockwise) to adjust the clutch.
4. Tighten the hex bolt to lock assembly after adjustment.

Note: After power has been turned back on, the first open command will automatically run the "multiple gate cycles" to locate and remember the open and close gate positions (See section 3.3 on previous page).

Important Note: 2 **magnetic sensors** located on the bottom of the circuit board sense when the magnetic spring assembly is slipping during operation. Keep all high voltage wires away from the 2 sensors to avoid any electrical interference between the sensors and magnets.

Test the operator clutch adjustment:

CAUTION: Keep pedestrians and vehicles clear of the gate while testing clutch!
Place an immobile object along the gate path, allowing the gate to strike it while in the **open** and **close** cycles. The clutch **must** slip and the gate **must** reverse direction after striking the object. If it does not, readjust the clutch. Repeat this test until the correct clutch adjustment has been achieved. The operator will assume a soft shutdown after striking and reversing the gate which will require a key switch command to cycle operator again.

3.5 Inherent Reverse Sensor Adjustment

This vehicular gate operator is equipped with an inherent adjustable reversing sensor (Type A) used as the primary entrapment protection system according to UL 325 standards. **The gate will reverse direction after "physically" encountering an obstruction in either the opening or closing gate cycle**.

If the Auto-Close Timer (DIP-switch SW 1, switch 2) is ON and the gate physically encounters an obstruction during the **CLOSING** cycle, it will reverse to the open position and **HOLD** the gate at this position (Soft shutdown condition). Another input command is needed before the gate will reset and close again.

If the Partial Open Feature is being used and the gate physically encounters an obstruction during the **CLOSING** cycle, the gate will only reverse to the **FULL** open position and **NOT** the partial open position.

For the reverse system to function correctly, the gate must be properly installed and work freely in both directions. **The clutch must be properly adjusted before adjusting the reverse sensor.**

1. Press the Key Switch button to cycle the gate. **Key Switch**
2. While gate is cycling, slowly rotate reverse sensor clockwise until the gate reverses direction. Rotate reverse sensor back counter-clockwise approximately 1/8 turn.
3. Cycle the gate a few times to be sure that it cycles completely.

Reverse Sensitivity

Note: Each operator must be individually adjusted if dual operators have been installed.

Test the operator reversing sensitivity:

Place an immobile object along the gate path, allowing the gate to strike it while in the **open** and **close** cycles. The gate must reverse direction after striking the object. If it does not, increase the reverse sensitivity (step 2) and repeat this test until the correct sensitivity has been set. The operator will assume a soft shutdown after striking and reversing the gate which will require a key switch command to cycle operator again.

SECTION 4 - ENTRAPMENT AND SAFETY PROTECTION

Secondary Entrapment Protection Devices:

In addition to the inherent reversing sensor system, the Model 9150 has a 5-pin UL 325 terminal for the connection of **photo sensors**-Type B1 and **reversing edges**-Type B2 secondary entrapment protection devices required by UL 325 standards. Entrapment protection devices **must be installed** to reduce the risk of injury. Install these devices where the risk of entrapment or obstruction exists while the gate is moving. The Model 9150 offers numerous options to meet your specific needs. The next 2 pages show wiring and typical positioning of the entrapment protection devices but specific installations will vary.

4.1 UL 325 Terminal Description

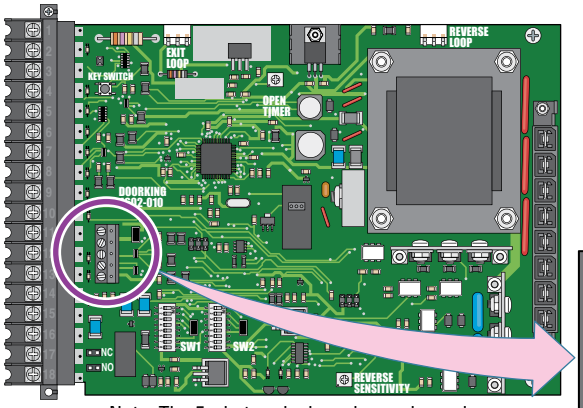

Note: The 5-pin terminal can be unplugged from circuit board for easy wire connections.

All inputs are normally open (NO).

5-Pin UL 325 Terminal
Secondary Entrapment Protection Device Connection

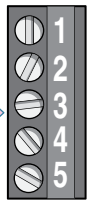

1. **OPEN Entrapment Sensor**
2. **CLOSE Entrapment Sensor**
3. **OPEN Contact Sensor**
4. **CLOSE Contact Sensor**
5. **Low Voltage Common**

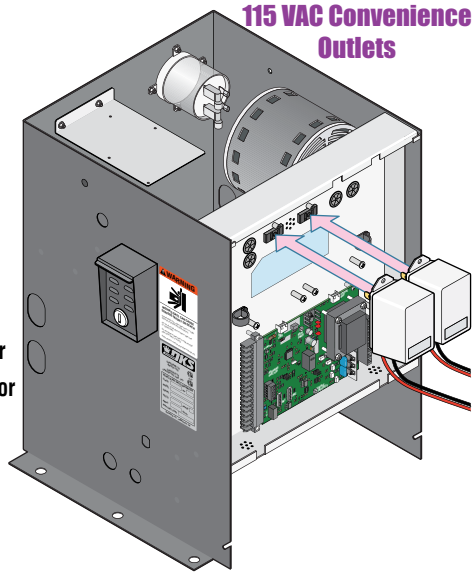

1 OPEN Entrapment Sensor (Photo Sensor): Obstructed opening-direction photo beam will stop the gate **during the opening-direction only.** Gate will resume the open cycle when the obstructed photo beam has been cleared.

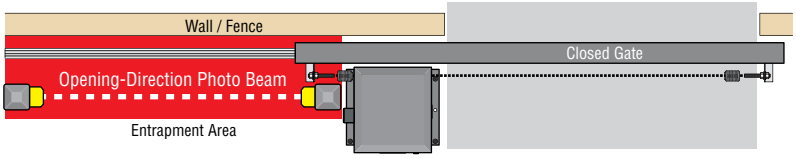

2 CLOSE Entrapment Sensor (Photo Sensor): Obstructed closing-direction photo beam will stop the gate **during the closing-direction only.** Gate will resume the close cycle when the obstructed photo beam has been cleared.

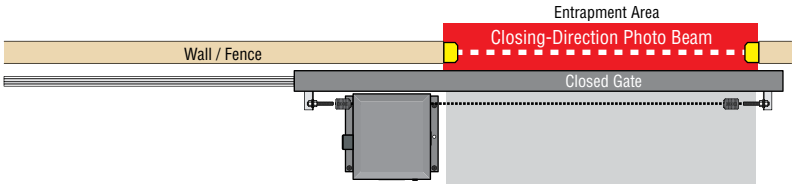

3 OPEN Contact Sensor (Reversing Edge(s)): Obstructed opening-direction reversing edge(s) will stop, then reverse the gate to the close position **during the opening-direction only.**

- After the gate reverses to the full close position, any opening input will cycle the gate again. Note: If the gate is opening by a time clock and an opening-direction reversing edge gets obstructed, the gate will return to the closed position and another input (automatic exit loop, reverse loop. etc.) is needed to cycle the gate open again.
- When the **opening-direction** reversing edge(s) gets obstructed and the gate is traveling back to the close position and the **closing-direction** reversing edge gets obstructed, the gate will **stop** and enter a soft shutdown condition (See page 36).

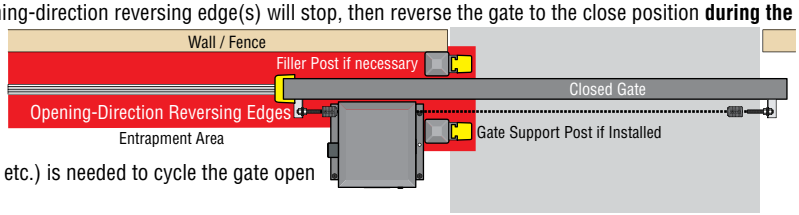

4 CLOSE Contact Sensor (Reversing Edge): Obstructed closing-direction reversing edge will stop, then reverse the gate to the open position, **during the closing-direction only.**

- After the gate reverses to the open position, the timer will automatically close the gate (if it is turned on). If the closing-direction reverse edge is activated a **second** time prior to the gate reaching the close position, the operator will **stop** and enter a soft shutdown condition (See page 36).
- When the **closing-direction** reversing edge gets obstructed and the gate is traveling back to the open position and the **opening-direction** revering edge gets obstructed, the gate will **stop** and enter a soft shutdown condition (See page 36).

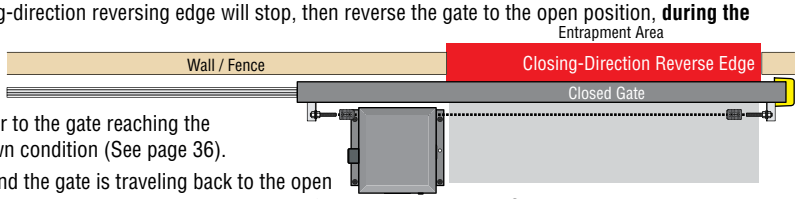

5 Low Voltage Common: Common terminal for all the secondary entrapment protection device inputs.

4.2 Secondary Entrapment Protection Device Locations

Typical UL Photo Sensor mounting height and distance away from gate.

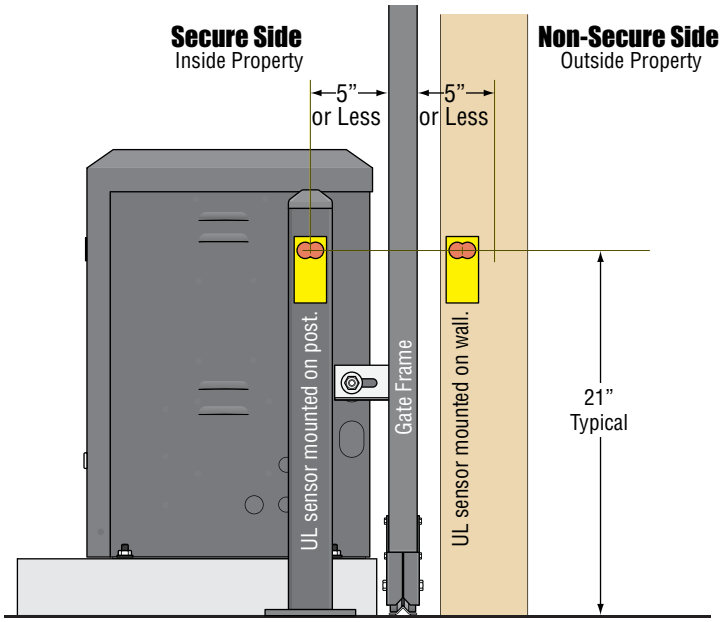

Photo sensors may be installed on either side of gate frame.

If the distance between the gate and wall is greater than 2 1/4”.

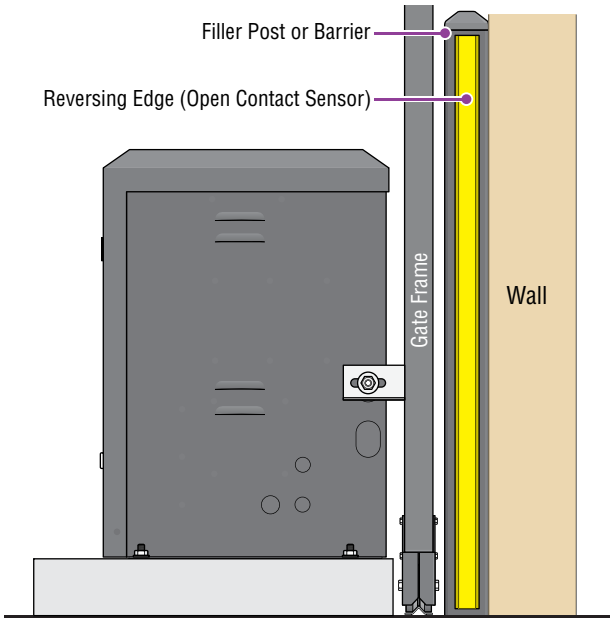

A filler post or barrier may need to be installed between the gate and wall area to reduce the distance to 2 1/4” **or less**. A reversing edge should be installed on the post or barrier for safety (See page 8 for more information).

Photo Sensors (With Filler Post and Reverse Edge) Sample Setup

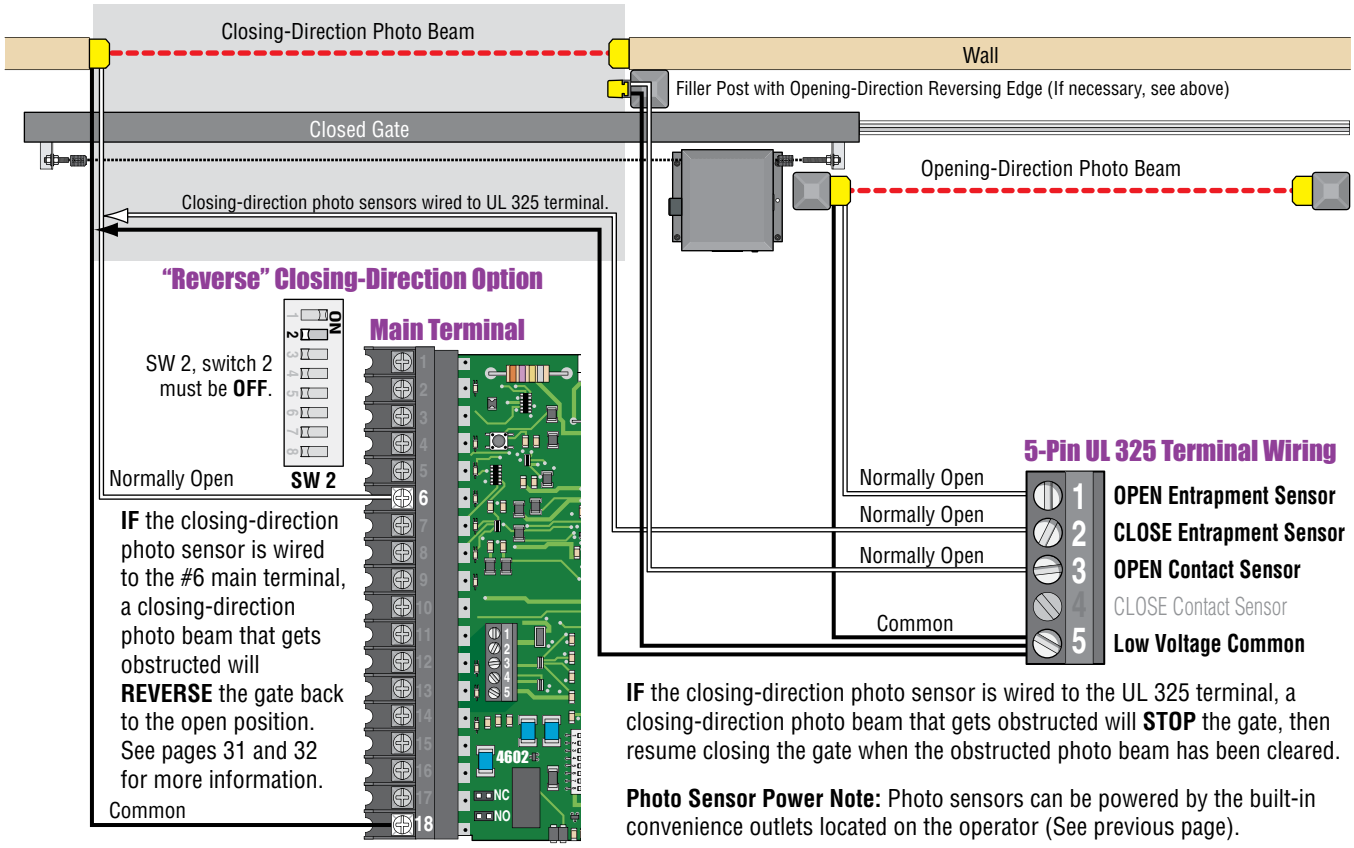

IF the closing-direction photo sensor is wired to the UL 325 terminal, a closing-direction photo beam that gets obstructed will **STOP** the gate, then resume closing the gate when the obstructed photo beam has been cleared.

Photo Sensor Power Note: Photo sensors can be powered by the built-in convenience outlets located on the operator (See previous page).

Wireless Reverse Edge Sample Setup - Single Receiver

9 V battery operated transmitter mounted on gate.

Edge Transmitter

Normally Open

Normally Open

Common

Filler Post Note: Install reversing edges on all the gate support posts or filler post in this area (e.g. cantilever gate installations, See below).

Wall

Opening-Direction Reversing Edge (If filler post is used).

Filler Post (If necessary)

Closed Gate

Opening-Direction Reversing Edge

Closing-Direction Reversing Edge

Antenna mounted outside operator cover.

Coax Antenna Kit P/N 1514-073

24 VAC Receiver

Place receiver in operator.

Com

24 Volt

Power is limited to 250 mamps.

Normally Open

Normally Open

Install Jumper Wire

Common

5-Pin UL 325 Terminal Wiring

1 OPEN Entrapment Sensor
2 CLOSE Entrapment Sensor
3 **OPEN Contact Sensor**
4 **CLOSE Contact Sensor**
5 **Low Voltage Common**

When either direction reversing edge gets obstructed, the gate will **STOP** and reverse direction.

Wireless Note: Refer to the instruction sheet that comes with the receiver/transmitter for more specific wiring and mounting instructions.

Main Terminal

Photo Sensor and Wireless Reverse Edge Sample Setup

Closing-Direction Reversing Edge

Install Opening-Direction reverse edges on the gate support post(s) in this area.

Cantilever Gate

Edge Transmitter

9 V battery operated transmitter mounted on gate.

Opening-Direction Photo Beam

Photo Sensor Power Note: Photo sensors can be powered by the built-in convenience outlets located on the operator (See page 27).

Normally Open

Com

24 Volt

Power is limited to 250 mamps.

Antenna mounted outside operator cover.

Wireless Note: Refer to the instruction sheet that comes with the receiver/transmitter for more specific wiring and mounting instructions.

Coax Antenna Kit P/N 1514-073

24 VAC Receiver

Place receiver in operator.

Main Terminal

Normally Open

Common

Normally Open

Common

Com

5-Pin UL 325 Terminal Wiring

1 **OPEN Entrapment Sensor**
2 CLOSE Entrapment Sensor
3 **OPEN Contact Sensor**
4 **CLOSE Contact Sensor**
5 **Low Voltage Common**

When a reversing edge gets obstructed, the gate will **STOP** and reverse direction. When a photo beam gets obstructed the gate will **STOP**, then continue in the same direction after obstructed photo beam has been cleared until the gate cycle is complete.

4.3 Loop Detector Wiring

To help protect the operator from accidentally closing on vehicles in the gate's path, DoorKing highly recommends that loops and loop detectors be installed. Loops are laid underneath, cut into asphalt or concrete driveways or buried beneath gravel and earth driveways. A loop detection system will sense a vehicle like a metal detector and send a signal to the gate operator preventing the gate from automatically opening or closing on a vehicle when it is in the gate's path. DoorKing recommends that a licensed installer perform this work.

DoorKing offers a free "**Loop and Loop-Detectors Information Manual**" PDF located at Doorking's web site for more information. www.dkaccess.com

Reverse Loops

Reverse loops are placed on each side of the gate to prevent the gate from closing on a vehicle in the gate's path. They will reverse **OR** stop the cycling of the gate while a vehicle is in or near the gate's pathway.

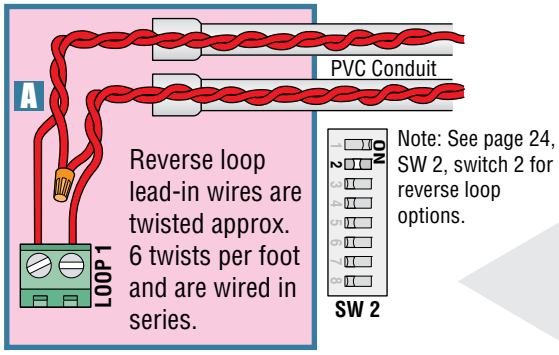

Note: See page 24, SW 2, switch 2 for reverse loop options.

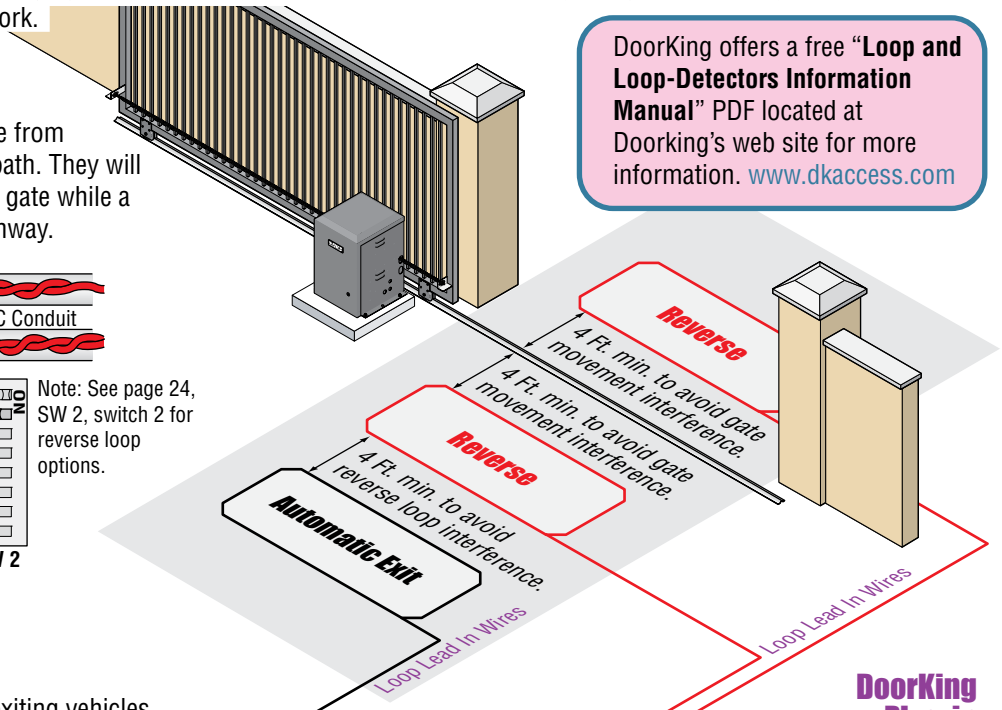

Automatic Exit Loop

Automatically opens the gate for exiting vehicles without having to use a transmitter or keypad. The exit loop can be placed a minimum of 4 feet away from the reverse loop or far enough away from the gate so the gate has started or completely opened by the time you drive up to it (Free exit).

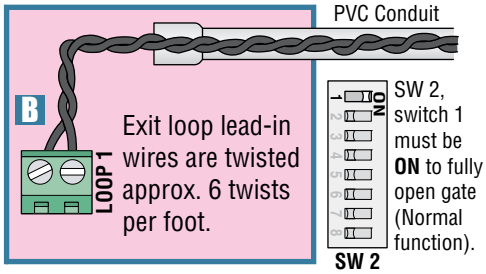

SW 2, switch 1 must be **ON** to fully open gate (Normal function).

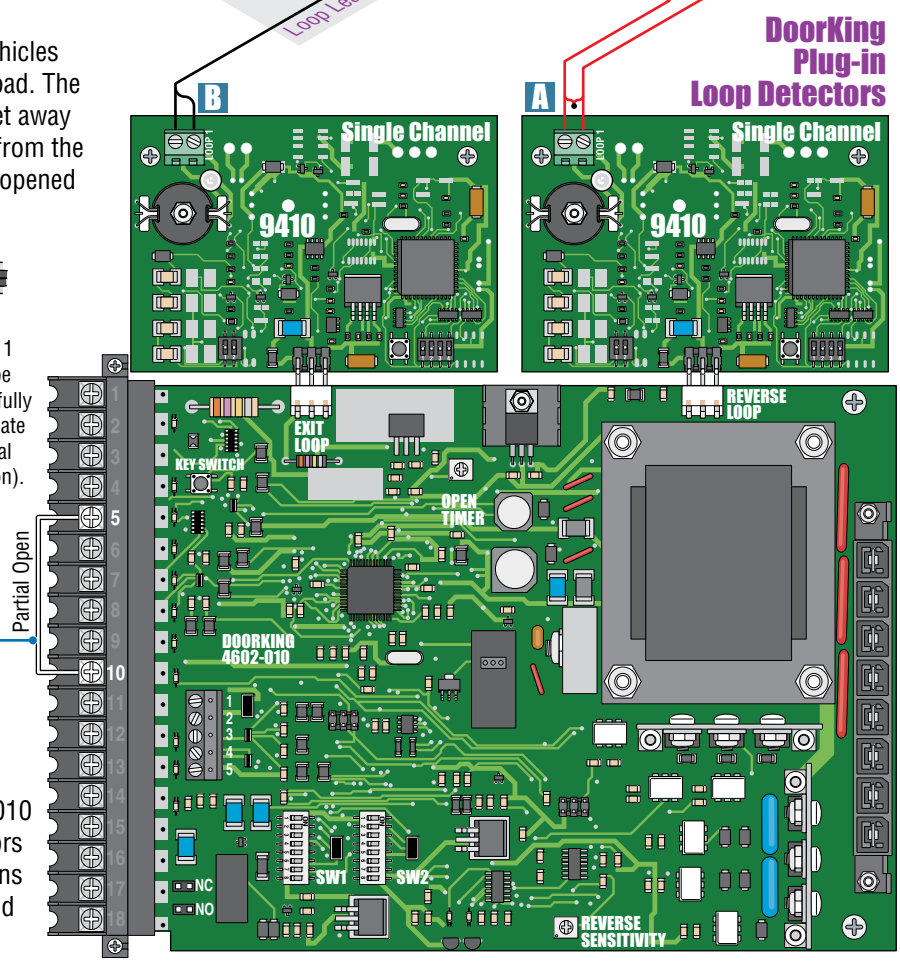

Note: The plug-in exit loop detector can be wired to partially open gate 14-Ft. if SW 2, switch 1 is turned **OFF**. A jumper wire must be connected from terminal #10 to terminal #5 (See next page for more information).

Note: Loop detector wiring is shown for DoorKing plug-in loop detector P/N 9410-010 (Single Channel) only. If other loop detectors are used, refer to the installation instructions supplied with those detectors for wiring and separate power instructions.

SECTION 5 - WIRING

5.1 Main Terminal Description

- When gate is closed, this input will fully open gate.
- When gate is open and auto close timer SW 1, switch 2 is turned ON, input will re-set and hold timer.
- When gate is open and auto close timer SW 1, switch 2 is turned OFF, input will close gate.
- When gate is closing, input will reverse gate.

For long gate application. SW 2, switch 3 must be **OFF.** Same operation as #4 terminal above but will only open a closed gate 14-Ft. or reverse a closing gate to the 14-Ft. open position.

- This input ONLY fuctions when gate is **fully opened** or in the **closing cycle**.

- When gate is open: **auto close timer** SW 1, switch 2 is turned **ON**, input will re-set and hold timer.
- When gate is open: **auto close timer** SW 1, switch 2 is turned **OFF**, input will prevent gate from closing.

- When gate is closing: input will **stop** gate when SW 2, switch 2 is **ON**.
- When gate is closing: input will **reverse** gate when SW 2, switch 2 is **OFF**.

- If SW 2, switch 1 is **ON**, the plug-in exit loop detector (Single channel) will **FULLY** open the gate (Normal Setting). **Single operator use ONLY**.
- If SW 2, switch 1 is **OFF**, the normal exit loop port function is bypassed and a jumper wire is needed to open and close gate(s) for certain applications:
  - Terminal #10 connected to terminal #5 will **PARTIALLY** open plug-in exit loop detector (Single channel) for a single operator.
  - Terminal #10 connected to terminal #4 will **FULLY** open bi-parting gates. **Dual operators ONLY using DoorKing's plug-in DUAL channel loop detector.** (Page 34).

Operation of relay is dependent on setting of SW 1, switches 4 and 5. Relay contacts can be set for Normally Open (NO) or Normally Closed (NC) operation.
Contact rating is 1 amp maximum at 24-volts DC.

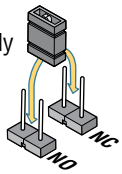

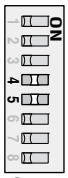

Provides 24 VDC, 250 ma. maximum to power LED. Operation of LED is dependent on setting of SW 1, switches 4 and 5 (See page 23).

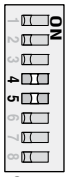

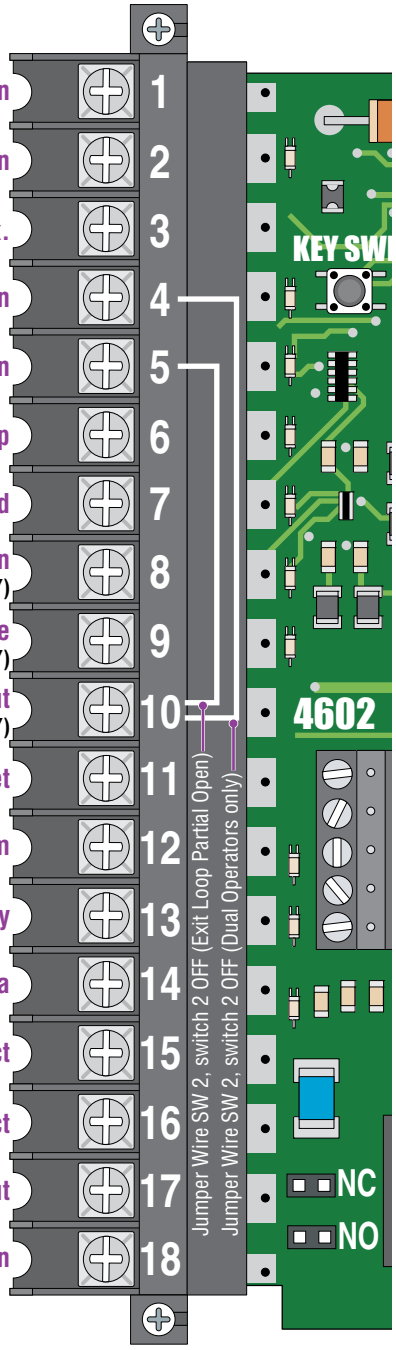

5.2 Control Wiring for Single/Primary Operator

Important: Controls must be far enough from the gate so that the user is prevented from coming in contact with the gate while operating the controls. Outdoor or easily accessible controls should have a security feature to prevent unauthorized use.

Wiring opening device when using "Manual Mode Operation" for convenience open operator(s): The opening device should be wired to the 2340 circuit board when using the convenience open system to "manually open" the gate(s) during a power failure. This will allow normal daily operation as well as AC power failure operation. **This should ONLY be wired this way when operating in the manual mode with convenience open operators** (See page 39 for more info).

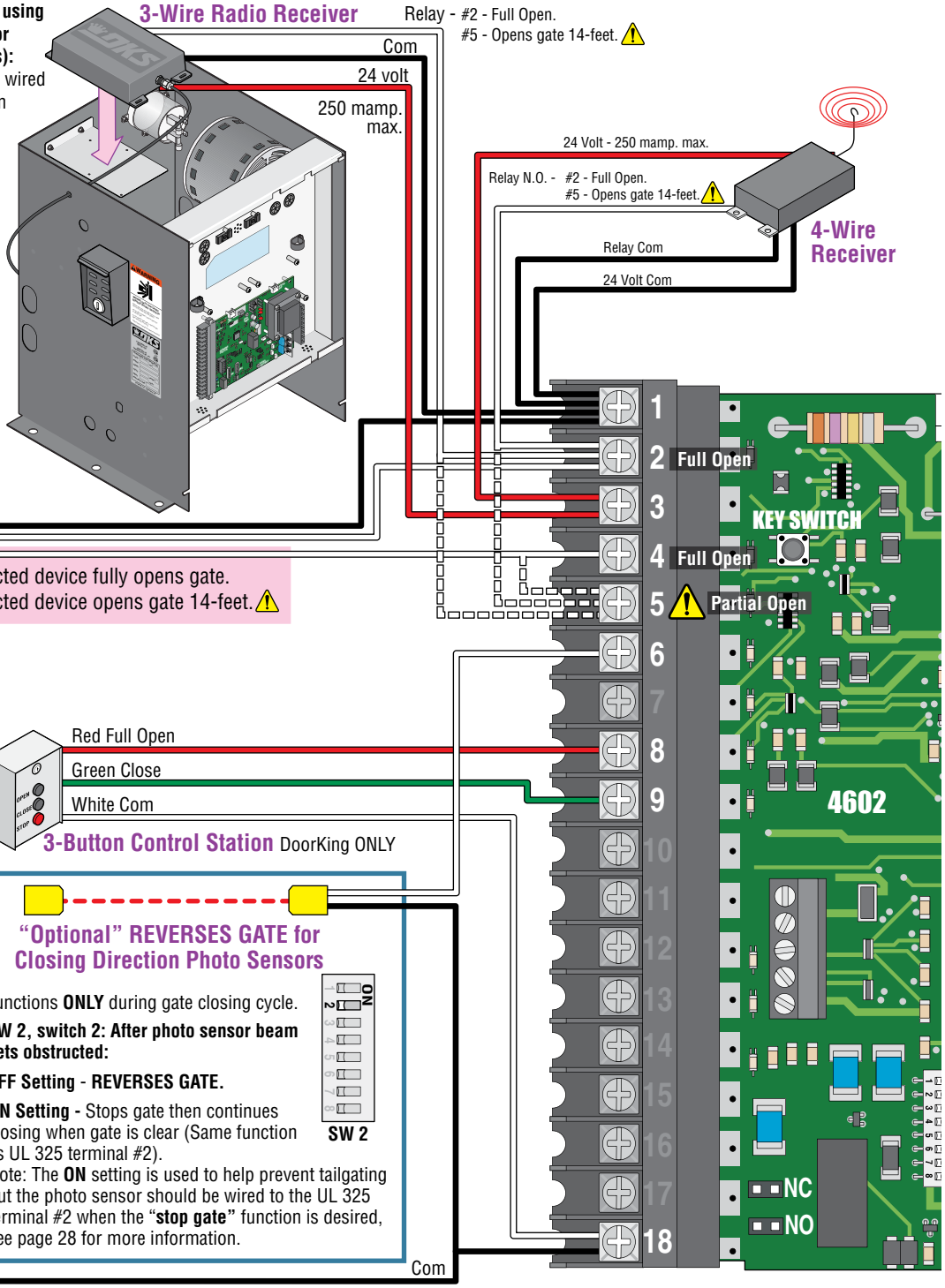

Note:
All stand-alone and telephone entry devices must use a separate power source.

5.3 Auxiliary Device Wiring

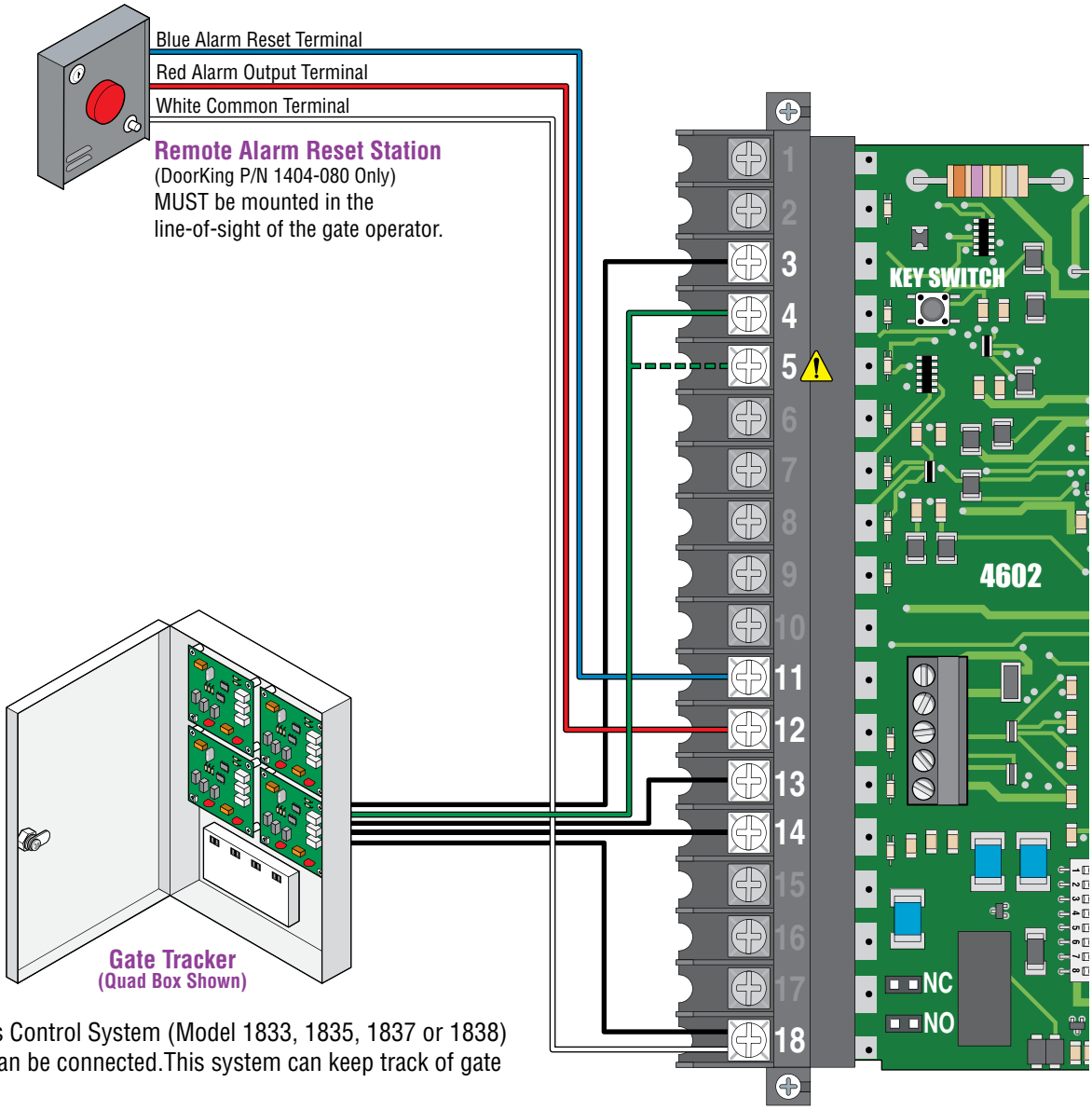

DoorKing Access Control System (Model 1833, 1835, 1837 or 1838) tracker system can be connected.This system can keep track of gate operator
cycle count, shorted inputs, loop detector problems, any forced entry attempts, if the gate has struck anything during the open or close cycle, power interruptions, etc.
For more detailed information refer to the Tracker Installation and Wiring Manual, DoorKing P/N 2351-010.

Terminal #4 (Full open) or #5 ⚠ (14-Ft. open) required only if the tracker board will activate the gate operator. Refer to the manual 2351-065 for detailed information.

5.4 Bi-Parting Gates Wiring - Dual Gate Operators

- Separate power source for photo sensors (See page 27).

Secondary Entrapment Protection Devices for Bi-Parting Gates

Closing Non-Contact Sensor
Fence
To Close Photo #2
To Close Photo #2
Fence
Filler Post if necessary (See page 8 for more information).
Opening Contact Sensor
Opening Contact Sensor
Filler Post if necessary (See page 8 for more information).
Gate
Gate
Opening Non-Contact Sensor
Primary Operator
Secondary Operator
Opening Non-Contact Sensor
To Common #5
To Common #5
To Open Edge #3
To Open Edge #3
To Close Photo #2
To Open Photo #1
To Open Photo #1

- Requires AC power to **each** operator.
- **Both** operator DIP-switches must to be set.
- Connect all control devices, auxiliary devices and loops to the **primary** operator **only**.

Com
Relay
24 Volt
250 mamp. max.

3-Wire Receiver

(Fully Opens Gates)

4-wire receiver wiring, see page 31.

Jumper Wire

When using Dual Channel plug-in loop detector.
Connect #4 to #10: fully opens gates.

SW 2, switch 1 must be **OFF**.

SW 2

Yellow
Purple
Brown
N.O.
Jumper Wire

Primary Operator
Open Photo 1
Close Photo 2
Open Edge 3
Close Edge 4
Common 5
UL 325 Terminal
NC
NO
4602

Secondary Operator
Open Photo 1
Close Photo 2
Open Edge 3
Close Edge 4
Common 5
UL 325 Terminal
NC
NO
4602

Red to Close Photo #2
Red to Close Photo #2

Green to primary operator chassis ground.
Green to secondary operator chassis ground.

Orange
Orange

Blue
Gray
Gray
Blue

Loop Detectors

Reverse Loop

Reverse Loop

Reverse loop lead-in wires are wired in series.

Automatic Exit Loop

Loop Lead-In Wires

Com

Dual Channel 9409

Plug into **Primary** Operator Exit Loop Port

Interconnection Cable

Sold separately from DoorKing.
6 wires used (8 - 18 AWG wires total).

Convenience Open Note: The gray wire is needed when using the convenience open in the **manual mode** (See page 40 for wiring information about "Wiring dual operators in manual mode").

SECTION 6 - OPERATING INSTRUCTIONS

IMPORTANT SAFETY INSTRUCTIONS

WARNING - *To reduce the risk of injury or death:*

1. READ AND FOLLOW ALL INSTRUCTIONS.
2. Never let children operate or play with gate controls. Keep the remote control away from children.
3. Always keep people and objects away from gate. **NO ONE SHOULD CROSS THE PATH OF THE MOVING GATE**.
4. Test the operator monthly. The gate MUST reverse on contact with a rigid object or stop or reverse when an object activates the non-contact sensors. After adjusting the force or the limit of travel, retest the gate operator. Failure to adjust and retest the gate operator properly can increase the risk of injury or death.
5. Use the emergency release only when the gate is not moving and power has been shut-off.
6. KEEP GATES PROPERLY MAINTAINED. Read the owner's manual. Have a qualified service person make repairs to gate hardware.
7. The entrance is for vehicles only. Pedestrians must use separate entrance.
8. **SAVE THESE INSTRUCTIONS**.

6.1 AC Power and Reset Switch

Unlock the power switch cover and open to access the Main Power, and the operator Reset switch.

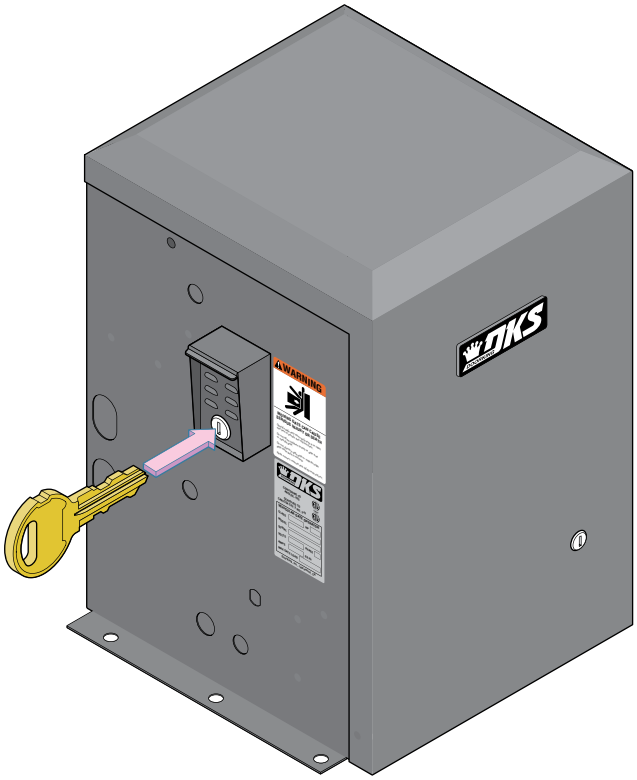

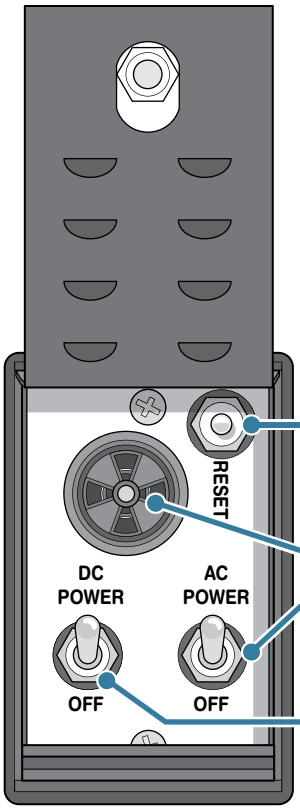

Important: The operator **WILL NOT** lose its open and close limit positions after pressing the reset button.

Reset Button - Used to turn off the entrapment alarm and to reset the operator after a **HARD** shutdown has occurred.

Alarm Siren

AC Power Switch - Powers the operator ON (toggle up) or OFF (toggle down).

DC Power Switch - Turns the DC system power ON (toggle up) or OFF (toggle down).
This switch is only installed on model 9150 operators with the DC convenience open system installed.

⚠ **Every time** the 9150 is powered up, the **First** open command will automatically run "**Multiple gate cycles"** that will locate and remember the gate's open and close positions (See page 25).

6.2 Shutdown Conditions

Under various entrapment conditions the operator will assume either a **soft** or **hard (alarm)** shutdown. To determine what type of reset action is required, you will need to understand how the different entrapment conditions affect the gate operator.

Soft Shutdown

This occurs in various situations where the inherent or secondary entrapment protection devices have been activated. In a soft shutdown condition, the operator **will not** respond to any input that was present when the entrapment protection device sensed an obstruction. If the gate stops at the open position, the operator will not respond to the automatic close timer.

- **Example 1** - A time clock keys the gate open in the morning and an entrapment protection device senses an obstruction prior to the gate reaching the full open position. If the entrapment is sensed by the inherent system, the gate will reverse and run back to the closed position. The time clock input is still present, but the gate will not re-open.

Note: In some systems, the time clock input comes from the telephone entry system relay. This same relay may also provide open commands for a card reader, MicroPLUS transmitters and the visitor telephone entry. If so, these devices will also be disabled in a soft shutdown condition.

- **Example 2** - If the gate is closing and an entrapment protection device is activated, the gate will either stop or reverse and run back to the open position, depending upon if the secondary or inherent device was activated. The automatic close timer will not close the gate.

- **Example 3** - Vehicle arrives at exit loop and gate runs towards the open position. If the inherent entrapment protection gets activated during this opening cycle, the gate reverses and runs back to the closed position. After the inherent entrapment protection is cleared, If the vehicle is still present at the exit loop, a soft shutdown condition does not occur. The exit loop input provides an immediate reset of the operator and the gate will again run to the open position.

Resetting a Soft Shutdown

In some conditions, a soft shutdown will reset as soon as the entrapment condition clears. For example, if a non-contact sensor (photo cell) is sensing an obstruction, the operator will stop the gate and assume a soft shutdown condition. When the photocell clears, the operator will return to normal operation.

When the operator is in a soft shutdown, activation of any "intended input" will reset the operator. An "intended input" includes any command, any standard safety input and any loop input. Activating any of these inputs will reset the gate. At that point the gate will return to normal operation. If the gate is open, the automatic close timer will then time out and close the gate.

Hard Shutdown (Alarm Activated)

A hard shutdown condition occurs when: (1.) The inherent entrapment protection system (Type A) gets activated TWO consecutive times before the gate completes the open or close cycle. (2.) The reversing edge (Type B2) gets activated and reverses but before the gate completes the reverse cycle the inherent entrapment protection system (Type A) gets activated.

- **Example of a Hard Shutdown** - The gate is closing and the inherent entrapment protection system senses an obstruction and causes the gate to reverse direction. As the gate begins to run in the open direction, a second obstruction is sensed prior to the gate reaching the full open position. Once the second obstruction has been sensed, the operator will stop, **the audio alarm will sound and all standard inputs are shut down** (including open commands, safety commands, loop inputs, etc.).

  - **To silence the alarm**, press the reset button or after 5 minutes, the audio alarm will shut off but will “chirp” every 5 seconds. This indicates that the operator is in a hard shutdown condition (The reset button must be pressed to reset the operator and stop the alarm “chirping”).

Resetting a Hard Shutdown

The operator is in a hard shutdown condition when the audio alarm is sounding OR "chirping" every 5 seconds.

- Before resetting a hard shutdown, determine why the shutdown occurred. Inspect the gate for any obstructions along its path that could have activated the inherent entrapment sensing system. Inspect the gate and gate hardware.

The audio alarm will sound for five minutes, or until the operator's reset button is pushed. After (5) five minutes the alarm will "chirp every 5 sec." and the hard shutdown condition will remain in affect until the reset button is pushed.

Note: DoorKing operators have a built-in alarm reset push button mounted on the operator above the power ON-OFF toggle switch. Activating this button will return the gate operator to normal operation, but will not cycle the gate operator. A remote alarm/reset station (P/N 1404-080) can be mounted external of the gate operator provided that it is installed in the line-of-sight of the gate and gate operator.

The gate operator **WILL NOT** lose its open and close positions after resetting a hard shutdown.

Once the gate has been reset, an open or close command is needed to start the gate operator. Most activating commands will cause the gate operator to cycle to the open position. This includes activation of a key switch or open command and activation of an automatic exit loop. Activation of a close command will run the gate to the closed position.

6.3 Manual Gate Operation

This operator is equipped with one of two types of manual release systems, **"Fail-Safe"** (required by many city codes) or **"Fail-Secure"** that will allow the gate to be pushed open in the event of a power outage or equipment failure.

Caution: Never attempt to manually push open any gate with an operator attached to it until you have verified that power to the operator has been shut-off.

Fail-Safe Manual Release System (Factory Installed)

This manual release system is the most reliable and safest method for placing the gate operator in manual operation. It is the preferred method of emergency gate operation under worse case conditions by many Fire Chiefs and Building Inspectors and is **typically used in Class I and Class II applications.** This system is accessible from either side of the gate and requires **NO** keys, cranks or other tools to manually operate the gate. This prevents any delays for emergency vehicle access in the event of a power outage. The operator "Fails" (Loss of AC power) in a "Safe" (Manually operable) condition.

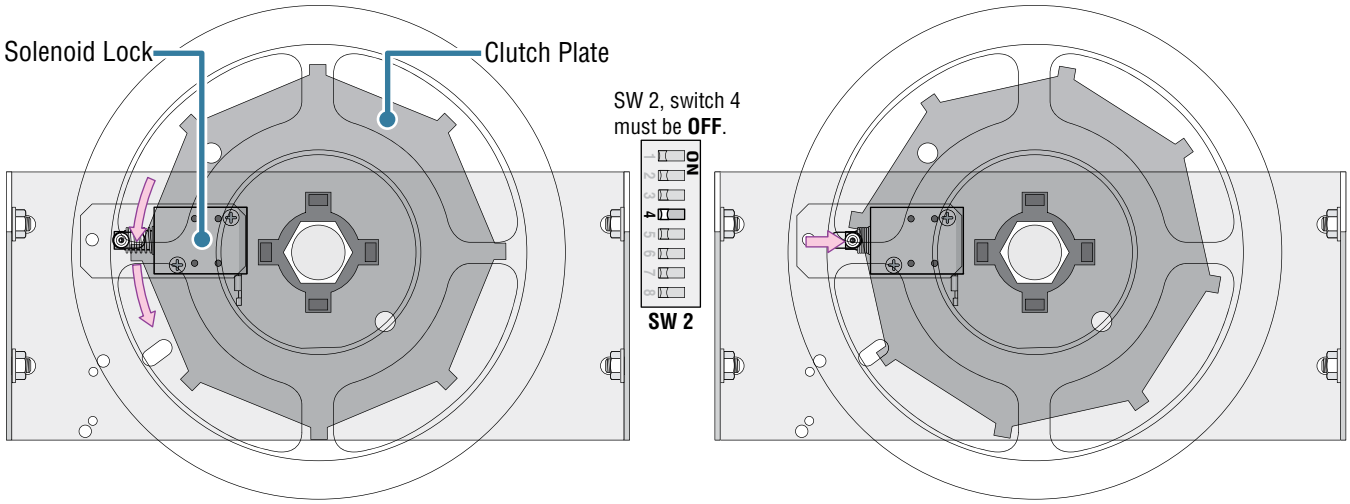

Solenoid lock does **NOT** secure the clutch plate during an AC power failure or turning AC power off. Gate can be immediately manually operated during these conditions.

Solenoid lock **WILL** retract and secure the clutch plate during normal operation **ONLY** if operator senses an **unauthorized** manual open attempt. Gate will **NOT** be allowed to move.

Fail-Secure Manual Release System (Owner Installed)

This manual release system (Installed 2600-865 Fail-Secure Manual Release Kit) allows the gate to be manually operated ONLY after unlocking the gate operator. Power outages or turning power off WILL NOT allow gate to be manually operated without physically unlocking the gate operator with the key first. This option is **typically used in Class III and Class IV applications.** The gate operator "Fails" (Loss of AC power) in a "Secure" (Manually in-operable) condition.

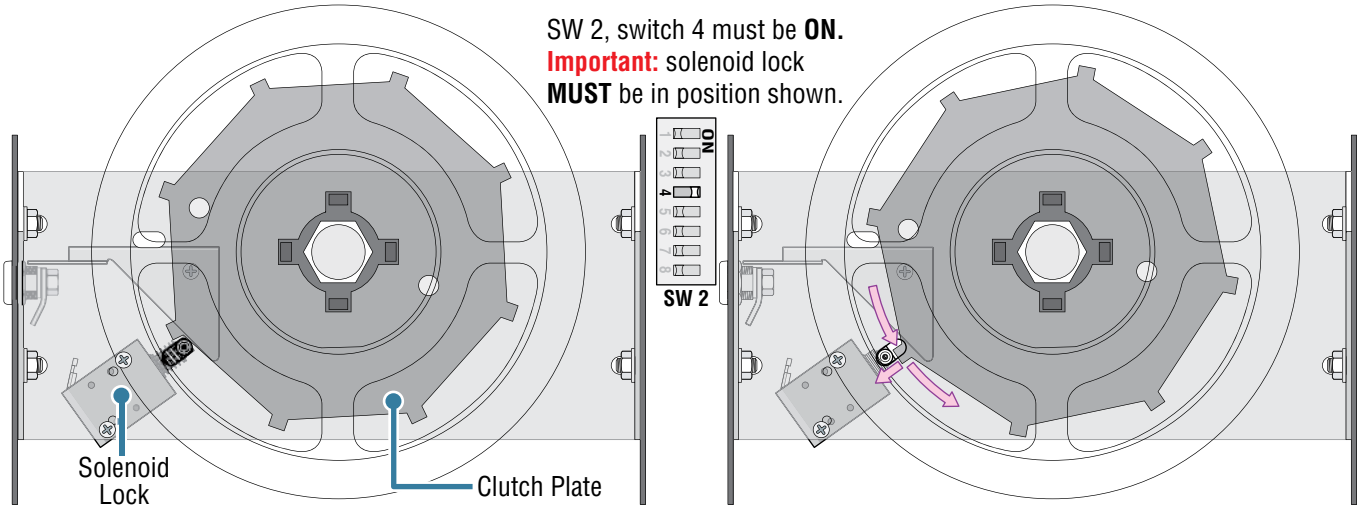

Solenoid lock does **NOT** allow the clutch plate to rotate when:

- The AC power is on but the operator is not cycling.
- The AC power is turned off.
- AC power failure.

Solenoid lock automatically retracts and allows clutch plate to rotate **ONLY** during normal gate cycling.

Key Release

Turning key 1/2 turn retracts solenoid lock and allows clutch plate to rotate for manual operation **with** or **without** AC power.

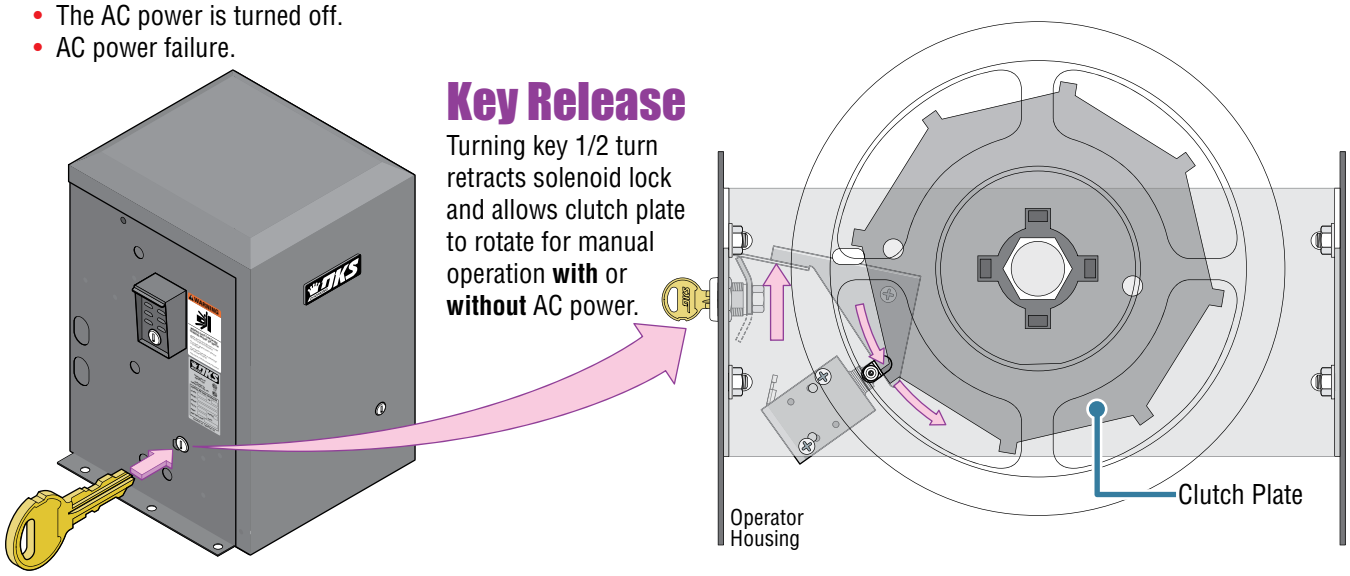

Emergency Vehicle Access Conditions

This automatic vehicular gate system is designed to allow access to emergency vehicles under different operating conditions.

1. During normal AC powered operation, emergency vehicles access the gate by a **separate** emergency access device individually installed and wired to your gate system. The type of devices that can be used in your community depends on your city codes. These devices may include (but are not limited to) Fire Department lock boxes, Click-2-Enter radio receivers, strobe light sensors, siren sensors, etc.

2. In the event of an AC power failure, the emergency vehicle access device will not function because the gate operator is un-powered. **"Fail-Safe" or "Fail-Secure"** release systems for the 9150 allow the gate to be manually operated during AC power failure. **ONLY** the **"Fail-Safe"** release system allows the gate to be manually operated **without** unlocking the operator first and has been designed that way to allow emergency personnel to immediately manually operate the gate from either side under emergency situations.

SECTION 7 - OPTIONAL CONVENIENCE OPEN ADJUSTMENTS

The optional convenience open system installed in your vehicular gate operator is designed as a convenience enhancement only. It is not designed or intended to provide continuous gate operation during a power outage. Its sole purpose is to provide a method to open the vehicular gate to allow unimpeded traffic flow when the gate and access control system is without power. If your access control system requires 100% power backup and continuous operation when primary (AC) power has failed, a power inverter / backup system, such as DoorKing's Model 2000, is required.

- The convenience open system cannot provide continuous gate operation during a power outage.
- ***The gate will cycle (Manual or Automatic Mode) to the open position ONE TIME ONLY after AC power failure.***
- The convenience open system requires testing on a monthly basis to insure the batteries are fully charged and that the system is operational.
- The convenience open system uses two 12-volt, 3.0 amp-hour gel-cell batteries. These batteries should be replaced every two years on average, or sooner if required.
- Batteries are affected by temperature. Cold temperatures will reduce the effectiveness of the batteries. High temperatures will result in a shortened battery life.
- Batteries are not covered under warranty.

7.1 Circuit Board (2340) Setup

Manual Mode Device Connection

See next page for specific dual operator wiring.

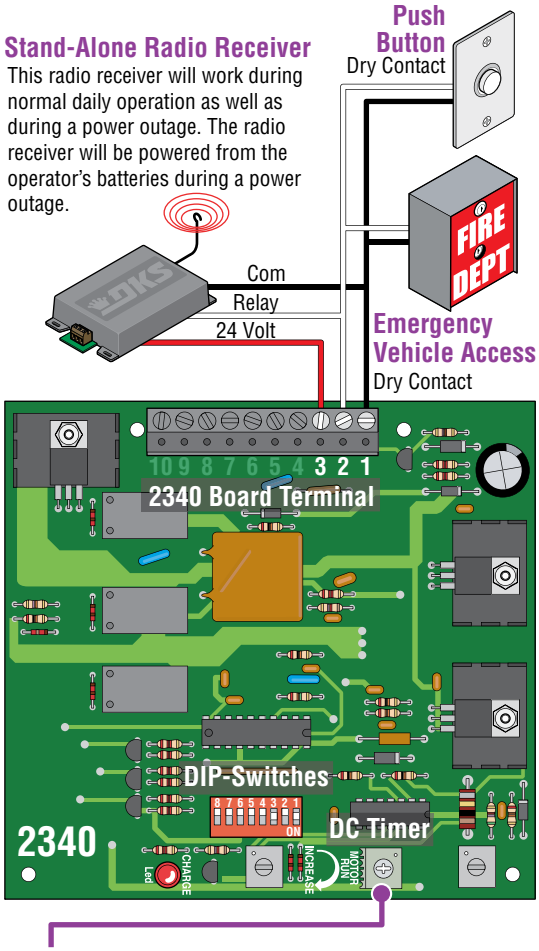

Automatic Mode after loss of AC Power, Switch 1 ON.

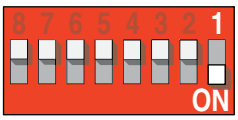

The Convenience Open system will automatically open the gate approximately 3 seconds after loss of AC power. The DC timer will run the DC motor. **NO** devices need to be connected to the 2340 board. Automatic mode is **always** used for gates in general access applications such as gated communities, apartment complexes, etc.

Manual Mode after loss of AC Power, Switch 1 OFF, Residential Use ONLY.

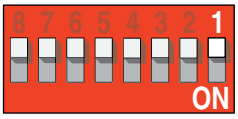

The system will **NOT** automatically open the gate after loss of AC power. A manual input is needed (Remote, push button or a key switch) to open the gate from one of the "Manual Mode Devices" **physically** wired to the 2340 circuit board (The DC timer will run the DC motor). Any control devices wired to the 4602 main terminal will **NOT** function after loss of AC power.

Note: If the gate operator is controlled by a DoorKing access controller (Models 1833, 1835, 1837 or 1838), the "Manual Mode" will **NOT** function during a power outage.

Restart Options once AC Power is restored, Switch 3 ON or OFF.

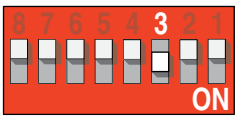

Once AC power is restored, the system's control board can be set to "**automatically re-key**" the gate operator (switch 3 **ON**) to establish normal operation, or can be set to require a "**manual input**" from the 2340 **OR** 4602 circuit board (switch 3 **OFF**) before the operator resumes normal operation.

DC Timer: **MUST** be adjusted so the **gate stops approximately six inches from the full open position.** Clockwise increases the DC motor run time, counter-clockwise decreases the run time. **Do not allow the DC motor to run long enough to hit the gate stop and continue to run. The operator clutch will slip and stall the DC motor. The circuit board may get damaged!**

7.2 DC System Description

Gate will automatically **OR** be manually OPENED and **STAY** open during an AC power failure. DIP-Switch 3 setting will determine how operator will return to normal operation once AC power has been restored.

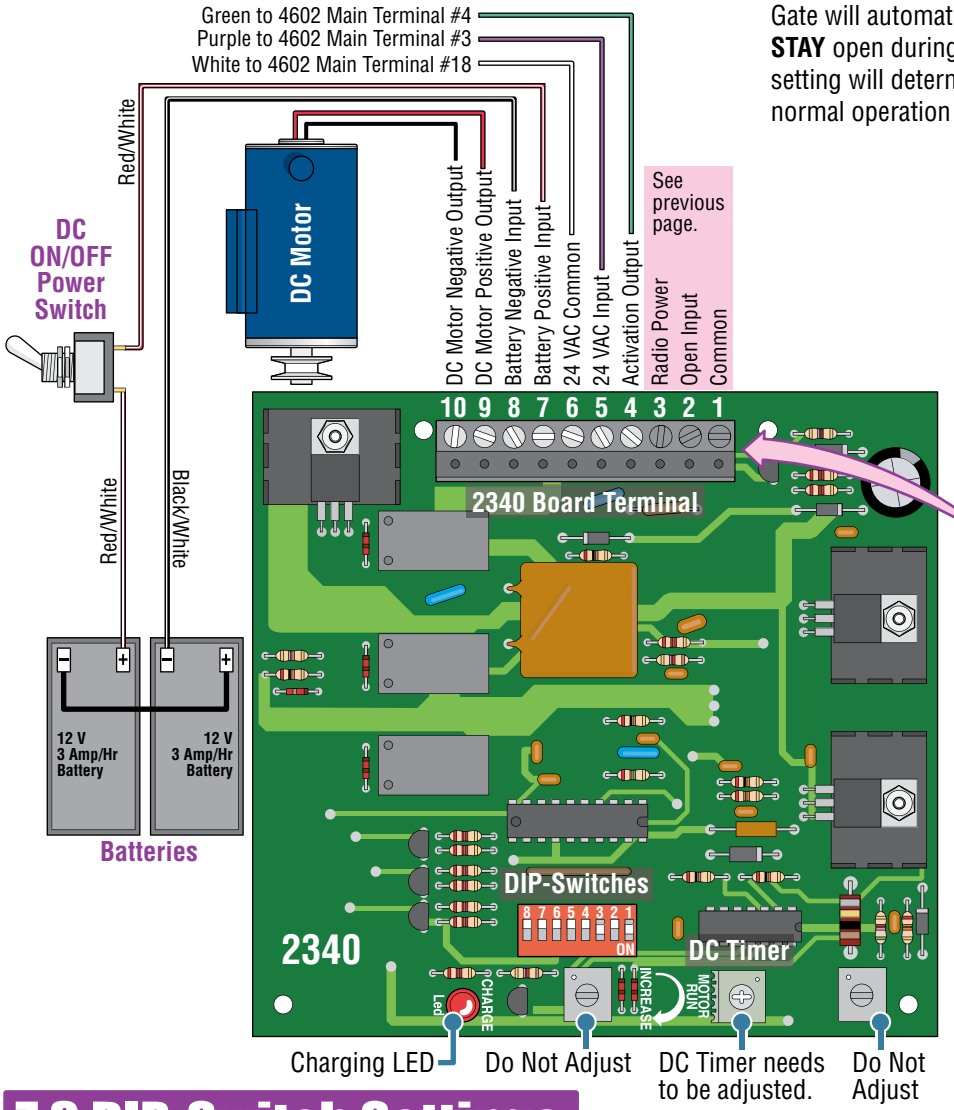

Wiring DUAL operators in Manual Mode.

If the operators will be in Manual mode (Switch 1 **OFF**) to OPEN the gates after an AC power failure, connect terminal #2 on each of the 2340 boards together.

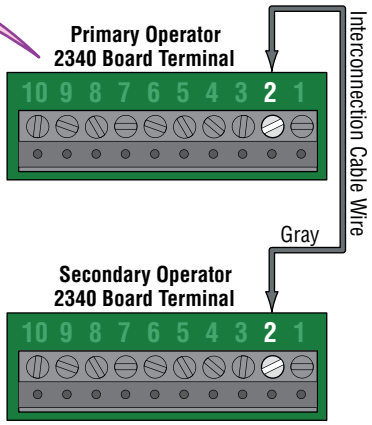

This wiring will NOT affect the Auto mode function if the operators are switched from Manual mode (Switch 1 **OFF**) to Auto mode (Switch 1 **ON**) in the future.

7.3 DIP-Switch Settings

Switch	Function	Setting	Description
1	Power Failure Operating Modes	OFF	Manual input from 2340 board needed to open gate when a power outage occurs.
		ON	Gate will automatically open when a power outage occurs.
2	Opening Direction. Setting must be the same as SW 1, switch 1 on the 4602 circuit board.		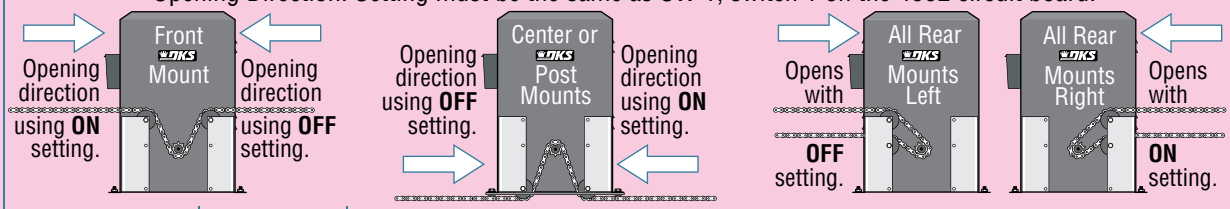
3	Restored AC Power Operator Response	OFF	When AC power is restored, a manual input (push button, loop, radio receiver, etc.) is required to return the gate to normal operation from 2340 or 4602 board.
		ON	When AC power is restored, a 1-second pulse is sent to the gate operator input to automatically restore normal operation.
4	Operator Type	**OFF**	Must be in the **OFF** position for the 9150.
5-8	Not Used	**OFF**	Must be in the **OFF** position.

SECTION 8 - MAINTENANCE AND TROUBLESHOOTING

Inspection and service of this gate operator by a qualified technician should be performed anytime a malfunction is observed or suspected. High cycle usage may require more frequent service checks.

8.1 Maintenance

When servicing the gate operator, always check any secondary (external) reversing devices (loops, photocells, etc.) for proper operation. If external reversing devices cannot be made operable, do not place this operator in service until the malfunction can be identified and corrected.

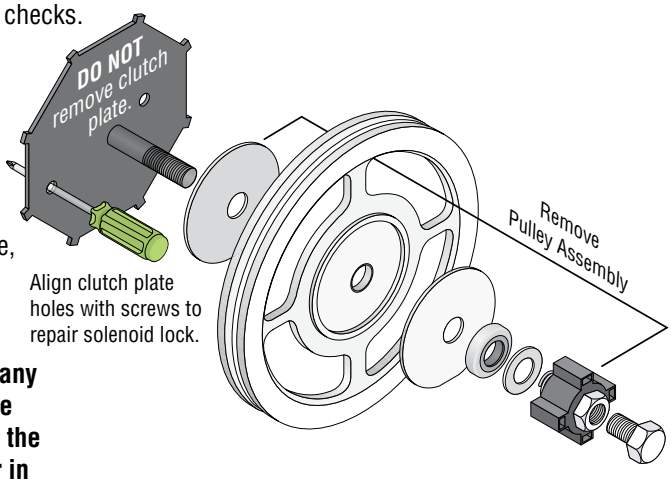

Always check the inherent reversing system when performing any maintenance. If the inherent reversing system cannot be made operable, remove this operator from service until the cause of the malfunction is identified and corrected. Keeping this operator in service when the inherent reversing system is malfunctioning creates a hazard for persons which can result in serious injury or death should they become entrapped in the gate.

When servicing this gate operator, always turn power **OFF!!**

⚠ **Every time** the 9150 is powered up, the **First** open command will automatically run "**Multiple gate cycles"** that will locate and remember the gate's open and close positions (See page 25).

Operator Component	Maintenance	Monthly Interval		
		3	6	12
Alarm	Activate the primary (inherent) reverse system by blocking the gate with a solid object. When the gate reverses, block the gate in the opposite direction prior to the limit being reached. The entrapment alarm should activate. Press the reset button to silence the alarm.	✓		
Batteries	If operator is equipped with optional DC open system, check the batteries for any leakage or loose connections. Batteries should be replaced every two years.	✓		
DC Open System	If operator is equipped with optional DC open system, check to be sure the system opens the gate upon loss of AC power.	✓		
Drive Belt	Check for alignment, tightness and wear.		✓	
Chain	Check for sagging. Tighten if necessary.	✓	✓	
Clutch	Check for proper slippage when an obstruction is encountered.	✓		
Fire Dept.	Check emergency vehicle access device for proper operation.	✓		
Gate	Inspect for damage. Check gate wheels. rollers and guides for wear and grease if necessary.		✓	
Grease	Wheels and guide rollers if necessary.		✓	
Loop(s)	Check vehicular exit and reverse loops for proper operation.	✓		
Primary Reverse System	Check that the gate reverses on contact with an object in both the opening and closing cycles. Adjust the reversing sensor and/or clutch if necessary.	✓		
Pulleys	Check for alignment. Check setscrews.		✓	
Release	Check manual release for proper operation.	✓		
Secondary Reverse Device	Check secondary (external) reverse device(s) stop or reverse the gate when activated.	✓		
Complete System	Complete check of gate and gate operating system.			✓

8.2 Troubleshooting

Have a good VOM meter to check voltages and continuity. A Meg-Ohm meter capable of checking up to 500 meg-ohms of resistance is necessary to properly check the integrity of the ground loops. When a malfunction occurs, isolate the problem to one of three areas: **1.** the operator, **2.** the loop system, **3.** the keying devices. **Use caution when checking high voltage terminals, motor capacitor and the motor.**

1. Check the input indicator LEDs. They should only come ON when a keying device (card reader, push button, etc.) is activated. If any of the input LEDs are ON continuously, this will cause the gate operator to hold open. Disconnect the keying devices one at a time until the LED goes OFF.

2. Check any external secondary entrapment protection devices. Any short or malfunction in these devices can cause the gate operator to stop or to hold open.

3. A malfunction in a loop or loop detector can cause the gate operator to hold open, or to not detect a vehicle when it is present over the loop. Pull the loop detector circuit boards from the loop ports on the operator circuit board. If the malfunction persists, the problem is not with the loop system. For more information on trouble shooting loops and loop detectors, refer to your loop detector instruction sheet and to the DoorKing Loop and Loop Detector Information Manual.

4. Check to be sure that there are no shorted or open control wires from the keying devices to the gate operator. If a keying device fails to open the gate, press the Key Switch or momentarily jumper across terminals 4 and 18 on the operator circuit board. If the gate operator starts, this indicates that a problem exist with the keying device and is not with the gate operator.

5. If a three-button control station (open-close-stop) is connected to this gate operator, check for proper wiring. Only a DoorKing three button control station (P/N 1200-006 or 007) can be used with this gate operator. Others will cause a malfunction.

6. Check the high voltage supply. A voltage drop on the supply line (usually caused by using too small supply voltage wires) will cause the operator to malfunction. Refer to the wire size chart in section 2.1 on page 20.

⚠ **Every time** the 9150 is powered up, the **First** open command will automatically run "**Multiple gate cycles"** that will locate and remember the gate's open and close positions (See page 25).

Symptom	Possible Solution(s)
Operator will not run. Power LED is OFF.	• Check that AC power to the operator is turned ON. • Transformer may be overheated. Turn power off and allow board to cool for several minutes then retest. Check for low 115 VAC power and low voltage shorts. • Check for 115 VAC at high voltage terminal. If voltage measures 0, check the incoming power wires or replace the circuit board.
Operator will not run. Power LED is ON.	• If a photo-cell is used as a secondary entrapment prevention device, check to be sure that the beam is not blocked. • Be sure that the chain is not too tight. A too tight chain may cause the operator to stall. • Bypass circuit board and **Check Motor:** Turn power switch OFF and remove the circuit board. Place a jumper wire from the 117 VAC SWITCHED terminal to the BLUE wire on the 8 pin POWER connector on the control board. **CAUTION – HIGH VOLTAGE.** Turn the power switch on. The motor should run. Turn the power switch OFF and remove the jumper. With power still OFF, place a jumper wire from the 117 VAC SWITCHED terminal to the RED wire on the 8 pin POWER connector on the control board. **CAUTION – HIGH VOLTAGE.** Turn the power switch on. The motor should run in the opposite direction. Turn the power switch off and remove the jumper. • If the motor runs in both steps above, replace the control board. If the motor does not run, or runs in only one direction, problem can be a bad motor, motor capacitor, motor resistors, wire connections from the control board to the motor or a bad control board.

Symptom	Possible Solution(s)
Gate opens a short distance, then stops and reverses.	• Check that the clutch is adjusted properly and is not slipping. • Disconnect the gate from the gate operator and check that the gate slides freely without any binding. • Re-adjust the reverse sensitivity. • Check that the magnetic pickup transistors on control board are not obstructed by excess wires. Electrical interference from excess wires can diminish magnetic field. • Check that the magnetic pickup transistors on control board are within 1/8 inch of the clear plastic protective cover above the black plastic magnetic spring assembly on the main shaft. • Contunue troubleshooting or replace the circuit board.
Gate opens but will not close.	• Check the input LEDs. Any ON will hold the gate open and indicates a problem with a keying device. • Check the secondary safety devices. Any activated will hold the gate open and indicates a problem with the safety device. • Check the loop detectors. Any activated can hold the gate open and indicates a problem with the loop detector or ground loop. • Operator may be in a "soft shutdown." Activate any keying device to determine if operator returns to normal operation. • If automatic close is desired, be sure SW 1, switch 2 is ON and set timer open from 1-23 seconds. • Bypass circuit board and check motor as described on previous page.
Gate closes but will not open.	• Operator may be in a "soft shutdown." Check input LEDs. If any are ON, momentarily disconnect, then re-connect the wire going to the respective terminal. Operator should open. • Check to be sure that the operator is running in the proper direction. Turn power OFF, and then back ON. Activate a keying device. Operator should run in the open direction. If operator runs in the close direction, turn power OFF and change direction switch SW 1, switch 1. Go to above section if operator now opens but will not close. • Be sure that the each LED on the control board lights when the keying device connected to the that terminal is activated. If LED does not light, momentarily place a jumper wire from terminal 1 to the input terminal being checked. If LED lights and gate opens, problem is with the keying device. If LED does not light, replace control board. • Bypass circuit board and check motor as described on previous page.
Gate starts to close, then reverses to open.	• Check that the clutch is adjusted properly and is not slipping. • Re-adjust the reverse sensitivity. • Disconnect the gate from the gate operator and check that the gate slides freely without any binding. • Check the loop detector LEDs and input LEDs. Any that flash ON will cause the gate to reverse. • Check the Magnetic Sensor LEDs on the circuit board. If either LED is not blinking as the operator is running, check that the magnetic pickup transistors are within 1/8 inch of the protective plastic cover above the magnet assembly on the main shaft. • Contunue troubleshooting or replace the circuit board.
Gate closes then re-opens.	• Check for any input or loop detector LED's that are ON. • Check that the operator is running in the proper direction (see "gate closes but will not open"). • Check the SELF-TEST DIP switch setting, SW 1, switch 6 should be OFF.
Alarm is sounding. Operator will not run.	• Operator is in a "hard shutdown" condition. Reset button must be pushed to return operator to normal operation, see Section 6.2 Shutdown Conditions, pages 36-37.
Alarm chirps once every 5 seconds. Operator will not run.	• Operator has been in a "hard shutdown" condition in excess of 5 minutes. Reset button must be pushed to return operator to normal operation, see Section 6.2 Shutdown Conditions, pages 36-37.

8.3 Accessory Items

The following accessory items are available for the model 9150 slide gate operator.

Contact Sensors - For use as a secondary entrapment protection device. Miller Edge, Inc., MGO20, MGR20, MGS20

Photo Cell - Non-contact (photocell) sensors for use as a secondary entrapment protection device.
MMTC, Inc. Model IR55 - P/N 8080-010 MMTC, Inc. Model 60-278 - P/N 8080-011
Carlo Gavazzi Type PMP12 - P/N 8080-030 Carlo Gavazzi Type PMT - P/N 8080-031

Loop Detector - Detectors plug directly into ports on circuit board simplifying wiring.
Single channel detector - P/N 9410-010 Dual channel detector - P/N 9409-010

Loop Wire - 18 AWG loop wire with XLPE insulation is ideal for ground loops. Available in 500 and 1000 foot rolls. Red, blue or black insulation.

Pre-Fab Loops - Prefabricated ground loops. 24-foot circumference with 50-foot lead-in. Available in yellow, red or blue jackets. Not for use in asphalt roadways.

Loop Test Meter - Meg-ohm meter checks the integrity of ground loops. P/N 9401-045

Remote Alarm/Reset Station - Provides a remote station to reset an operator in a hard shutdown condition. Must be mounted in line-of-site of the gate and operator. Includes visual alarm light and audible siren. P/N 1404-080.

3-Button Control Station - Provides open-close-stop manual operation of the gate.
Stand Alone Box - P/N 1200-006 Interior (fits in single gang box) - P/N 1200-007

Interconnect Cable - Interconnect wire cable contains all the necessary wires to interconnect primary / secondary operators.
Cable length: 30 ft. - P/N 2600-755 40 ft. - P/N 2600-756 50 ft. - P/N 2600-757

Time Clock - 7 day and 365 day time clocks can be used to automatically open gate at pre-set time and days. Compact clock fits inside the operator. 7 day clock - P/N 2600-791 365 day clock - P/N 2600-795

V-Wheels - 4 inch and 6 inch. UHMW or Steel. Roller bearings or sleeve bearings. Single or tandem wheel configurations.

Endless Idler Assembly with Protective Cover - Use when gate operator chain needs 180° return. P/N 2600-818

Guide Rollers with Protective Covers - A variety of sizes to support slide gates.

Gate End Retainer - Fits on top of end post and helps stabilize the end of the gate in the open or closed position (End post NOT provided). P/N 1204-004

Base Plate for 9150 - Required for post mount installation. P/N 2600-495 (6 x 6 steel posts NOT provided).

Base Plate Stop Brackets for 9150 - Required for post mount installation when using chain stops. P/N 2600-970

Additional #40 Chain - 20 ft. per box. P/N 2600-442

9150 Fail-Secure Manual Release Kit - Changes the Fail-Safe manual release to a Fail-Secure manual release. P/N 2600-865

High Voltage Kit - Alter the input AC voltage on a 115 VAC 9150 to 208, 230, 460 or 575 VAC. P/N 2600-266

115 VAC Heater with Fan Assembly Kit - Thermostatically controlled heater and fan for cold and hot environments.
For 115 VAC input power ONLY. P/N 1601-154

208/230 VAC Heater with Fan Assembly Kit - Thermostatically controlled heater and fan for cold and hot environments.
For 208/230 VAC input power ONLY. P/N 1601-197

460 VAC Heater with Fan Assembly Kit - Thermostatically controlled heater and fan for cold and hot environments.
For 460 VAC input power ONLY. P/N 1601-198

Surge Devices - High and low voltage surge suppressors help prevent circuit board failure caused by lightning strikes and power surges. High Voltage - P/N 1879-080 Low Voltage - P/N 1878-010

Gate Scale - Use to test torque required to move gate. P/N 2600-225

Speed Bumps - Prefabricated six-foot speed bump reduces traffic speed through gate system. P/N 1610-150

Model 9150 1/2 HP 115 VAC

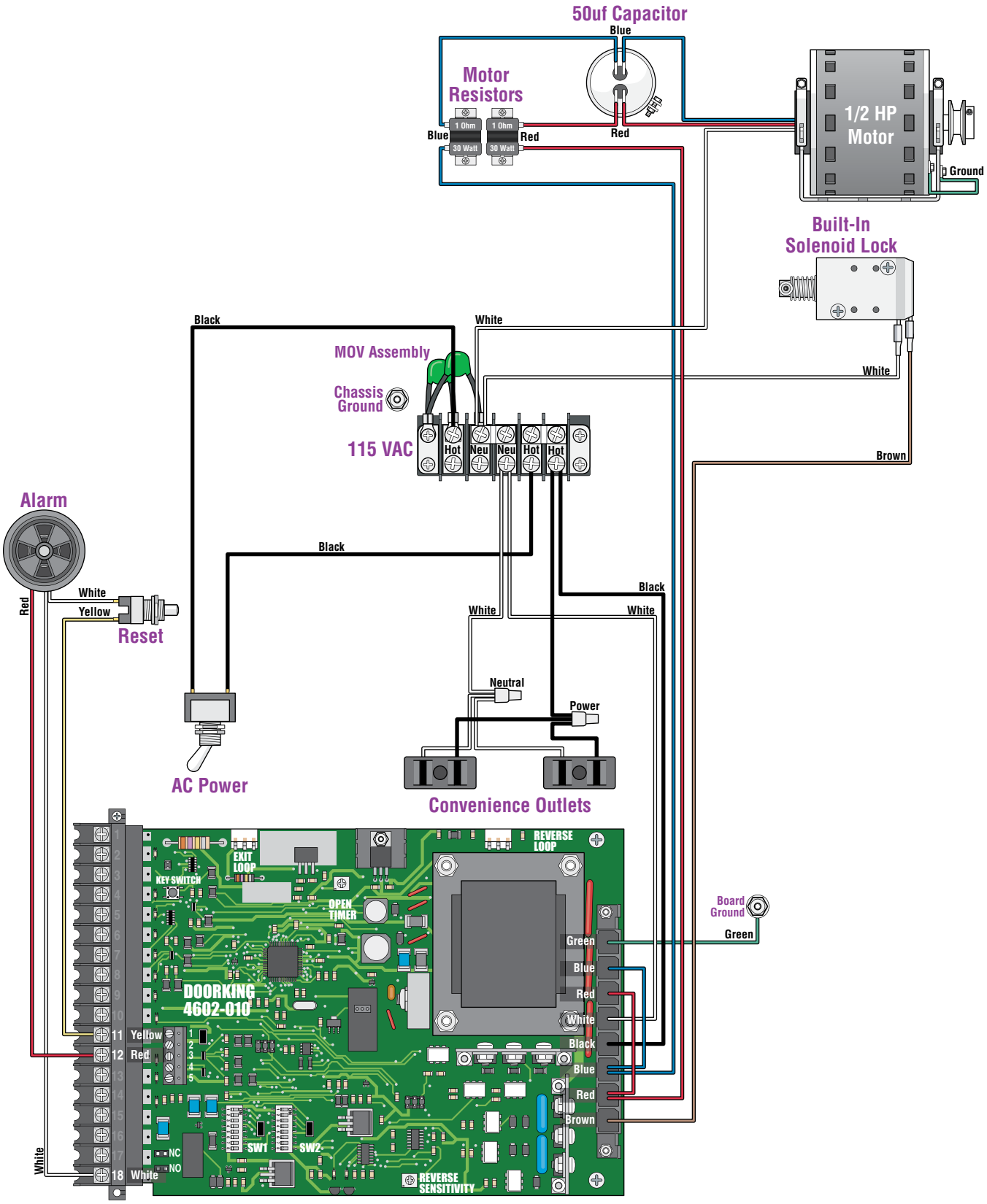

Model 9150 1/2 HP 115 VAC / Convenience Open

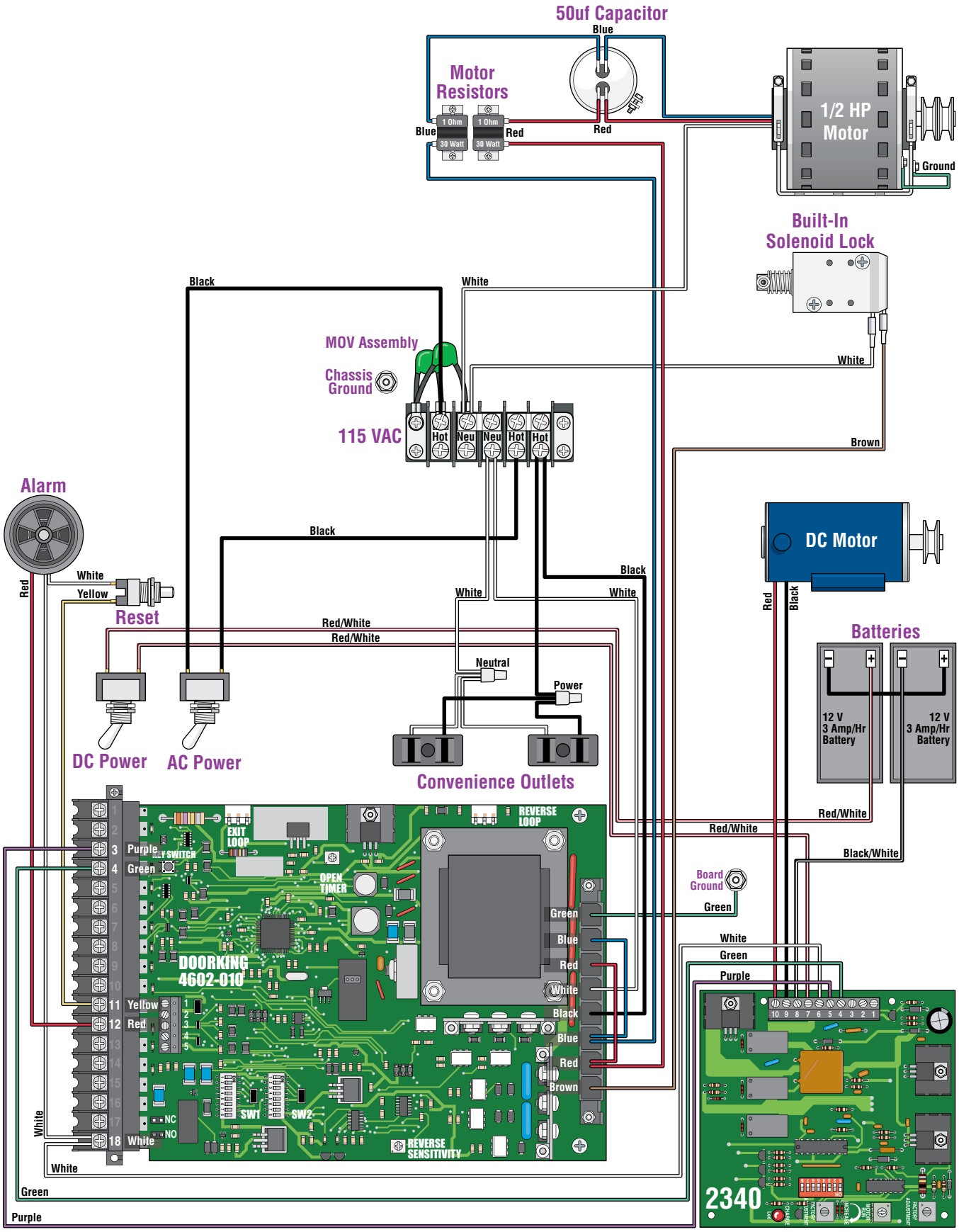

Model 9150 1 HP 115 VAC

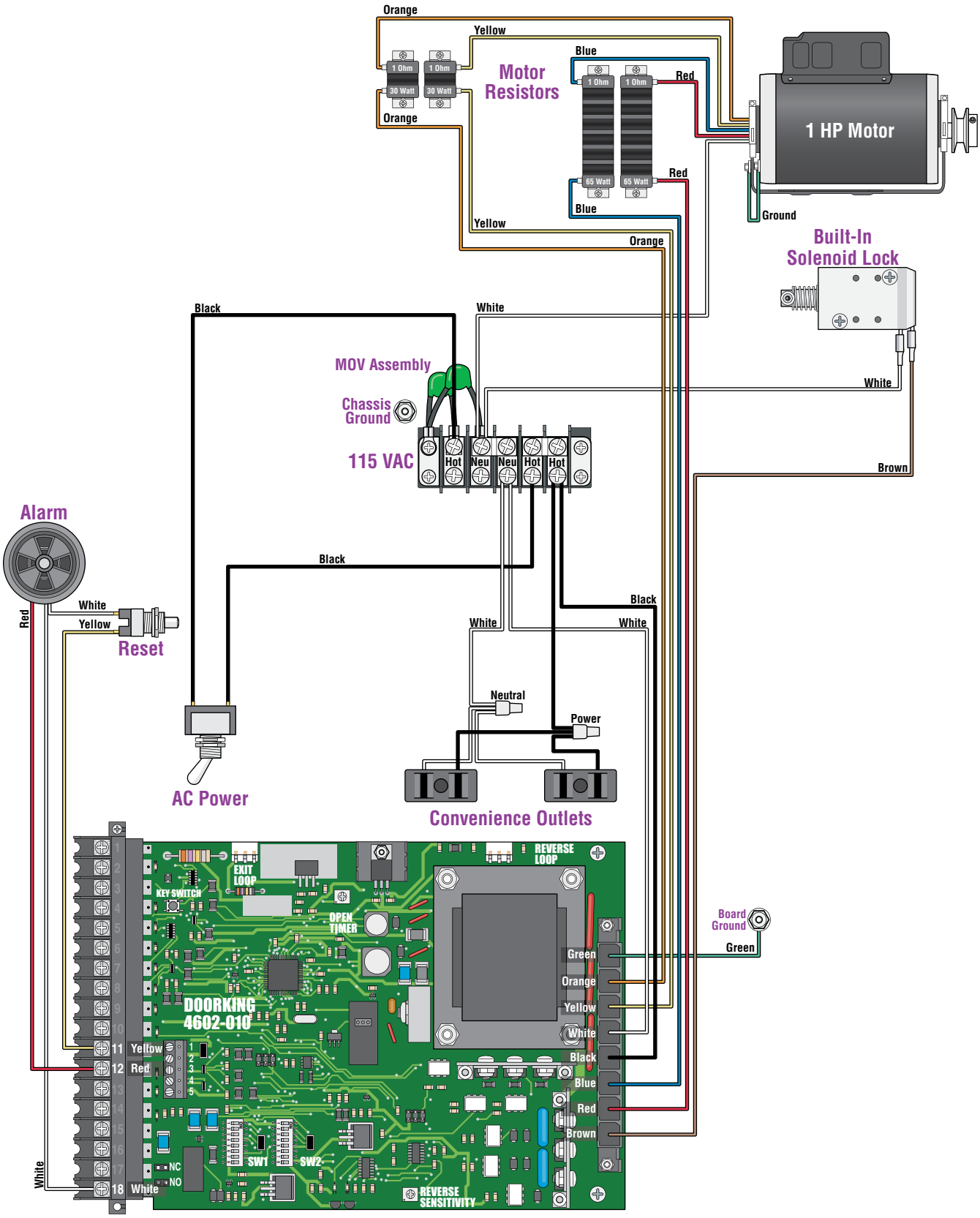

Model 9150 1 HP 115 VAC / Convenience Open

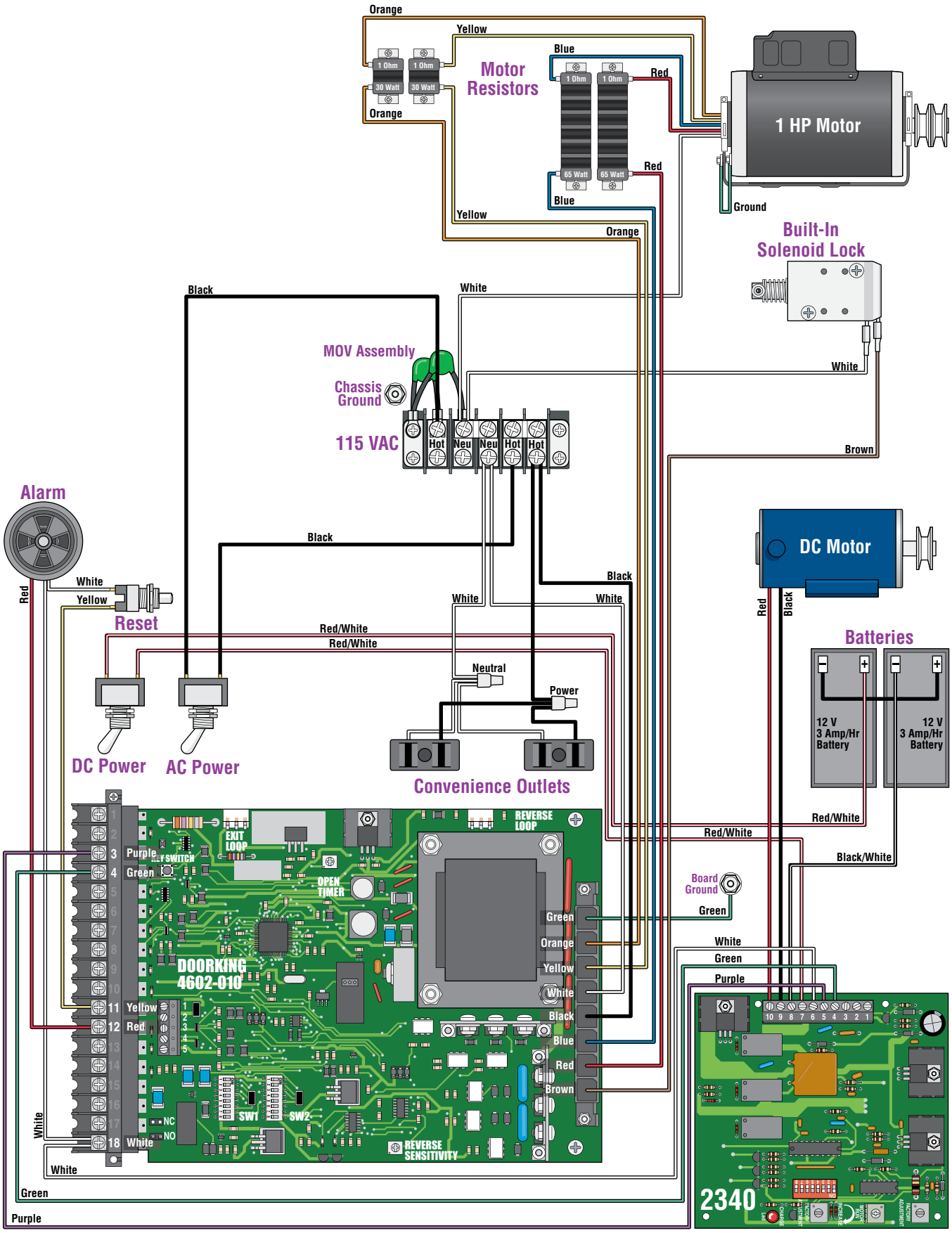

Installation/Owner's Manual

Series 9150

Vehicular Slide Gate Operator

Use this manual for circuit board 4602-010 Revision A or higher.

9150-065-V-12-12

Convenience Open Optional

DOORKING®, INC.

www.doorking.com

DoorKing, Inc.
120 Glasgow Avenue
Inglewood, California 90301
U.S.A.

Phone: 310-645-0023
Fax: 310-641-1586