Installation/Owner's Manual

Series 9000

Vehicular Slide Gate Operator

Use this manual for circuit board 4405-010 Revision D or higher.

9000-065-L-12-12

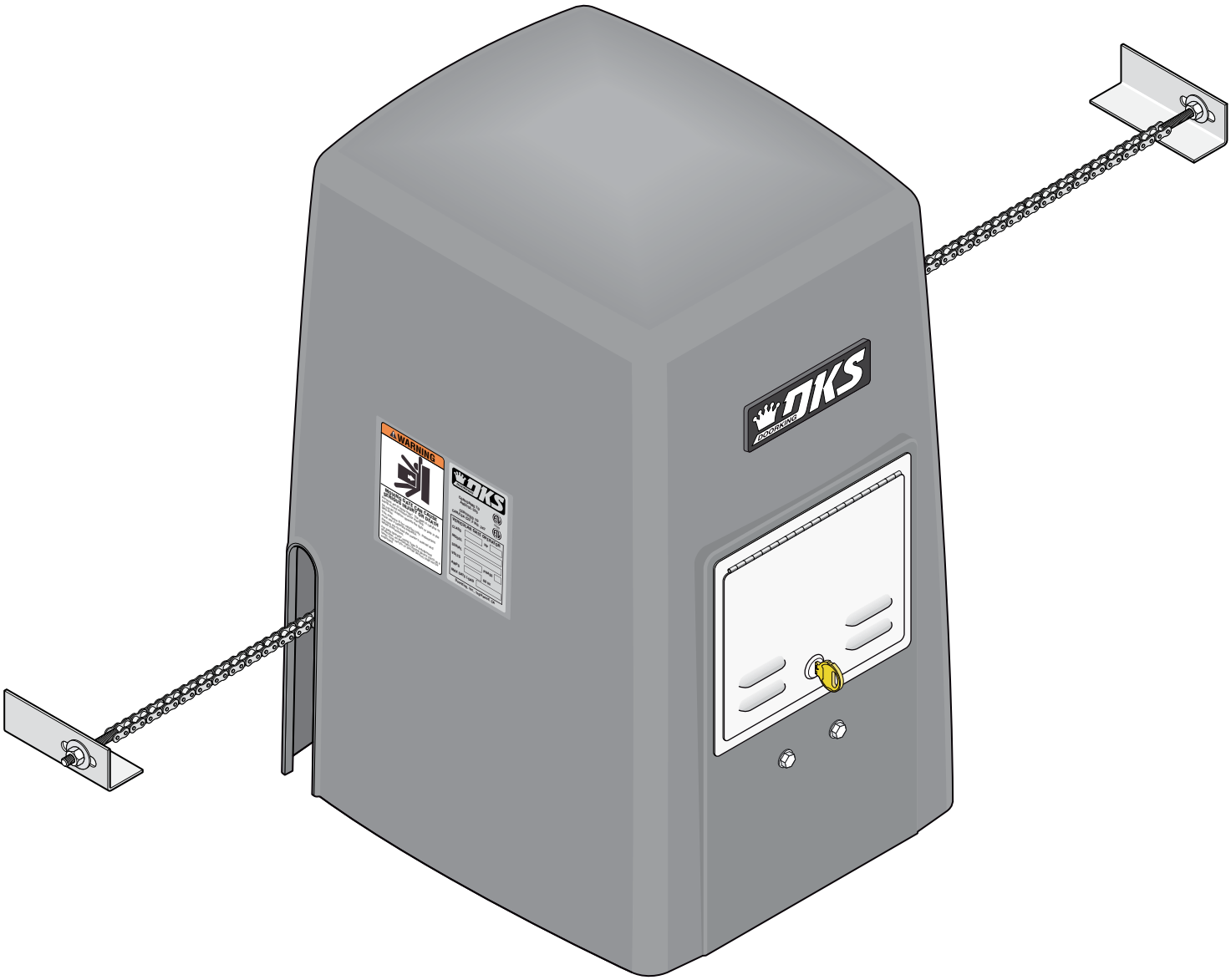

Date Installed: _____

Installer/Company Name: _____

_____

Phone Number: _____

Circuit Board
Serial Number
and Revision Letter: _____

Leave Manual with Owner

Copyright 2012 DoorKing, Inc. All rights reserved.

Intertek

UL 325 Compliant

DOORKING®, INC.™

SPECIFICATIONS

Use this manual for the Model 9000 operators with circuit board 4405-010 Rev D or higher ONLY.

Class of Operation UL 325 Class I, II, III, IV
Type of Gate Vehicular Slide Gates Only
Drive Sprocket Size #40 Chain
Entrapment Protection **Primary** - Inherent entrapment sensing system (Type A)
Secondary - Provision for connection of photo sensors (Type B1) and/or reversing edges (Type B2).

			Gate Installed Level			
Model #	**Horsepower - Volts - Phase**	**Amp**	**Max Gate Weight** Installed Level	**Max Gate Length** Installed Level	**Cycles Per Hour**	**Speed**
9000-080	1/2 HP - 115 VAC 1-Phase	5.4	1,000 Lbs.	35 Ft.	60	1 Ft/Sec
9000-081	Secondary Operator 1/2 HP - 115 VAC 1-Phase	5.4	1,000 Lbs.	35 Ft.	60	1 Ft/Sec
9000-085	1 HP - 115 VAC 1-Phase	9.7	1,500 Lbs.	35 Ft.	60	1 Ft/Sec
9000-086	Secondary Operator 1 HP - 115 VAC 1-Phase	9.7	1,500 Lbs.	35 Ft.	60	1 Ft/Sec

Note: 208/230/460/575 VAC input voltage can be connected to the operator by installing an "Optional" High Voltage Kit (P/N 2600-266).

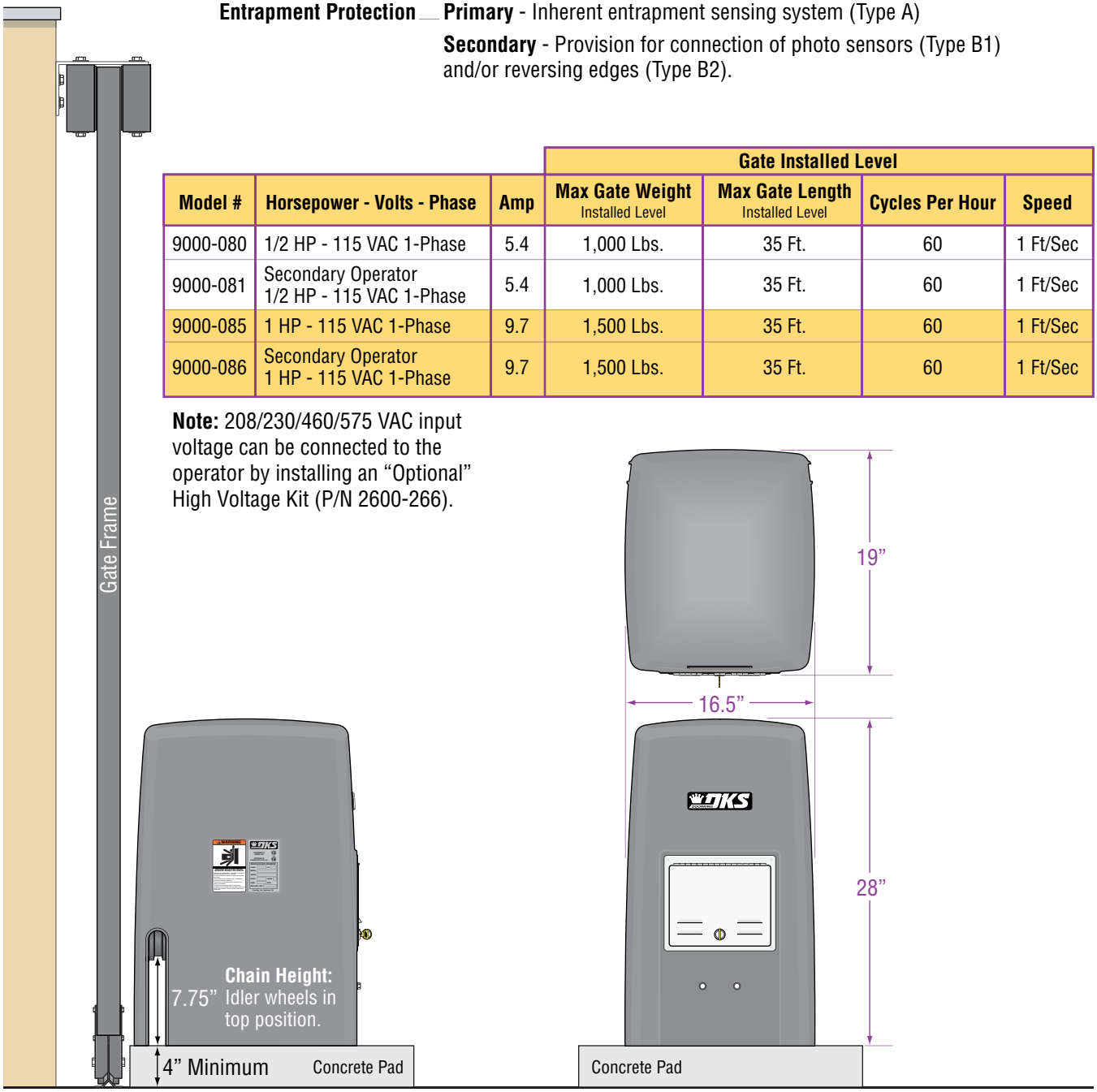

DoorKing, Inc. reserves the right to make changes in the products described in this manual without notice and without obligation of DoorKing, Inc. to notify any persons of any such revisions or changes. Additionally, DoorKing, Inc. makes no representations or warranties with respect to this manual. This manual is copyrighted, all rights reserved. No portion of this manual may be copied, reproduced, translated, or reduced to any electronic medium without prior written consent from DoorKing, Inc.

TABLE OF CONTENTS

SPECIFICATIONS 1

ASTM 2200 Standard for Gate Construction 4
Important Safety Instructions 4
Instructions regarding intended installation 4
Important Notices 5
UL325 Entrapment Protection 6
Glossary 7
Slide Gate Requirements 8
Slide Gate Protection 9

SECTION 1 - INSTALLATION 10

1.1 Hardware for the Gate 10
1.2 Underground Conduit Requirements 10
1.3 Gate Types 11
1.4 Operator Mounting Positions 12-14
1.5 Concrete Pad Setup or Optional Post Mount Kit 15
1.6 Positioning Operator and Chain 16
1.7 Attaching Operator and Chain 16
1.8 Endless Idler Assembly (On Select Installations) 17
1.9 DoorKing's Chain Tray Kit 18
1.10 Installation of Warning Signs 18

SECTION 2 - AC POWER TO OPERATOR(S) 19

2.1 AC Power Wire Runs and Terminal Connection 19
2.2 Bi-Parting Gates Wiring - Dual Gate Operators 20

TABLE OF CONTENTS

SECTION 3 - ADJUSTMENTS 21

3.1 4405 Circuit Board Descriptions and Adjustments 21

3.2 DIP-Switch Settings for 4405 Circuit Board 22-23

3.3 Limit Switches 24

3.4 Inherent Reverse Sensor Adjustment 25

3.5 Secondary Current Sensor Adjustment (Dual Gates) 26

SECTION 4 - ENTRAPMENT AND SAFETY PROTECTION 27

4.1 UL 325 Terminal Wiring 27

4.2 Secondary Entrapment Protection Device Locations 28-29

4.3 Loop Detectors 30

SECTION 5 - MAIN TERMINAL WIRING 31

5.1 Terminal Descriptions 31

5.2 Control Wiring 32

SECTION 6 - OPERATING INSTRUCTIONS 33

6.1 Operator Controls and Resets 33

6.2 Shutdown Conditions 34

Soft Shutdown

Hard Shutdown

6.3 Manual Gate Operation 35

SECTION 7 - MAINTENANCE AND TROUBLESHOOTING 36

7.1 Maintenance 36

7.2 Built-In Diagnostics 36

7.3 Troubleshooting 37-38

7.4 Accessory Items 39

Model 9000 115 VAC Wiring Diagram 40

ASTM F2200 Standard for Gate Construction

Vehicular gates should be constructed and installed in accordance with ASTM F2200; Standard Specification for Automated Vehicular Gate Construction. For a copy of this standard, contact ASTM directly at 610-832-9585; service@astm.org; or www.astm.org.

Important Safety Instructions

WARNING - To reduce the risk of injury or death:

1. READ AND FOLLOW ALL INSTRUCTIONS.
2. Never let children operate or play with gate controls. Keep the remote control away from children.
3. Always keep people and objects away from gate. **NO ONE SHOULD CROSS THE PATH OF THE MOVING GATE.**
4. Test the operator monthly. The gate MUST reverse on contact with a rigid object or stop or reverse when an object activates the non-contact sensors. After adjusting the force or the limit of travel, retest the gate operator. Failure to adjust and retest the gate operator properly can increase the risk of injury or death.
5. Use the emergency release only when the gate is not moving.
6. KEEP GATES PROPERLY MAINTAINED. Read the owner's manual. Have a qualified service person make repairs to gate hardware.
7. The entrance is for vehicles only. Pedestrians must use separate entrance.
8. **SAVE THESE INSTRUCTIONS!**

Instructions regarding intended installation:

- Install the gate operator only if:
  1. The operator is appropriate for the construction of the gate and the usage class of the gate.
  2. All openings of a horizontal slide gate are guarded or screened from the bottom of the gate to a minimum of 6 feet (1.83 m) above the ground to prevent a 2 ¼ inch (57.2 mm) diameter sphere from passing through the openings anywhere in the gate, and in that portion of the adjacent fence that the gate covers in the open position.
  3. All exposed pinch points are eliminated or guarded.
  4. Guarding is supplied for exposed rollers.
- The operator is intended for installation only on gates used for vehicles. Pedestrians must be supplied with a separate access opening. The pedestrian access opening shall be designed to promote pedestrian usage. Locate the gate such that persons will not come in contact with the vehicular gate during the entire path of travel of the vehicular gate.
- The gate must be installed in a location so that enough clearance is supplied between the gate and adjacent structures when opening and closing to reduce the risk of entrapment. Swinging gates should not open into public access areas.
- The gate must be properly installed and work freely in both directions prior to the installation of the gate operator. Do not over-tighten the operator clutch, pressure relief valve or reduce reversing sensitivity to compensate for a damaged gate.
- For gate operators utilizing Type D protection:
  1. The gate operator controls must be placed so that the user has full view of the gate area when the gate is moving.
  2. A warning placard shall be placed adjacent to the controls.
  3. An automatic closing device (such as a timer, loop sensor, or similar device) shall not be employed.
  4. No other activation device shall be connected.
- Controls intended for user activation must be located at least ten feet (10’) away from any moving part of the gate and where the user is prevented from reaching over, under, around or through the gate to operate the controls. Outdoor or easily accessible controls should have a security feature to prevent unauthorized use.
- The Stop and/or Reset button must be located in the line-of-sight of the gate. Activation of the reset control shall not cause the operator to start.
- A minimum of two (2) WARNING SIGNS shall be installed, one on each side of the gate where easily visible.
- For gate operators utilizing a non-contact sensor:
  1. See the instructions on the placement of non-contact sensors for each type of application.
  2. Care shall be exercised to reduce the risk of nuisance tripping, such as when a vehicle trips the sensor while the gate is still moving in the opening direction.
  3. One or more non-contact sensors shall be located where the risk of entrapment or obstruction exist, such as the perimeter reachable by a moving gate or barrier.

- For gate operators utilizing contact sensors:
  1. One or more contact sensors shall be located where the risk of entrapment or obstruction exist, such as at the leading edge, trailing edge, and post mounted both inside and outside of a vehicular horizontal slide gate.
  2. One or more contact sensors shall be located at the bottom edge of a vehicular vertical lift gate.
  3. One or more contact sensors shall be located at the pinch point of a vehicular vertical pivot gate.
  4. A hardwired contact sensor shall be located and its wiring arranged so that the communication between the sensor and the gate operator is not subjected to mechanical damage.
  5. A wireless contact sensor such as one that transmits radio frequency (RF) signals to the gate operator for entrapment protection functions shall be located where the transmission of the signals are not obstructed or impeded by building structures, natural landscaping or similar obstructions. A wireless contact sensor shall function under the intended end-use conditions.
  6. One or more contact sensors shall be located at the bottom edge of a vertical barrier (arm).

Important Notices

Vehicular gate operator products provide convenience and security. However, gate operators must use high levels of force to move gates and most people underestimate the power of these systems and do not realize the potential hazards associated with an incorrectly designed or installed system. These hazards may include:

- Pinch points
- Entrapment areas
- Reach through hazards
- Absence of entrapment protection devices
- Improperly located access controls
- Absence of vehicle protection devices
- Absence of controlled pedestrian access

In addition to these potential hazards, automated vehicular gate systems must be installed in accordance with the UL 325 Safety Standard and the ASTM F2200 Construction Standard. Most lay persons are unaware of, or are not familiar with, these standards. If an automated vehicular gate system is not properly designed, installed, used and maintained, serious injuries or death can result. Be sure that the installer has instructed you on the proper operation of the gate and gate operator system.

Be sure that the installer has trained you about the basic functions of the required reversing systems associated with your gate operating system and how to test them. These include reversing loops, inherent reversing system, electric edges, photoelectric cells, or other external devices.

- This Owner's Manual is your property. Keep it in a safe place for future reference.
- Be sure that all access control devices are installed a minimum distance of 10 feet away from the gate and gate operator, or in such a way that a person cannot touch the gate or gate operator while using the device. If access control devices are installed in violation of these restrictions, immediately remove the gate operator from service and contact your installing dealer.
- Loops and loop detectors, photo-cells or other equivalent devices must be installed to prevent the gate from closing on vehicular traffic.
- The speed limit for vehicular traffic through the gate area is 5 MPH. Install speed bumps and signs to keep vehicular traffic from speeding through the gate area. Failure to adhere to posted speed limits can result in damage to the gate, gate operator, and to the vehicle.
- Be sure that all persons who will use the gate system are familiar with the proper use of the gate and gate operator and are familiar with the possible hazards associated with the gate system.
- Be sure that warning signs are permanently installed on both sides of the gate in an area where they are fully visible to traffic.
- It is your responsibility to periodically check all entrapment protection devices. If any of these devices are observed to function improperly, remove the operator from service immediately and contact your installing or servicing dealer.
- Follow the recommended maintenance schedule.
- Do not allow children to play in the area of the operator or to play with any gate-operating device.
- To remove the gate operator from service, operate the gate to the full open position and then shut off power to the operator at the service panel.

UL 325 Entrapment Protection

Class I

A vehicular gate operator (or system) intended for use in a home of one-to four single family dwelling, or a garage or parking area associated therewith.

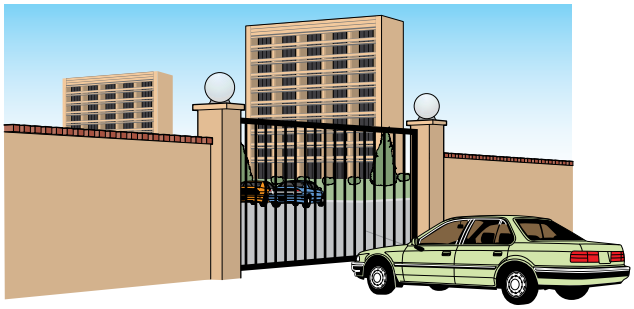

Class II

A vehicular gate operator (or system) intended for use in a commercial location or building such as a multi-family housing unit (five or more single family units) hotel, garages, retail store or other building servicing the general public.

Class III

A vehicular gate operator (or system) intended for use in a industrial location or building such as a factory or loading dock area or other locations not intended to service the general public.

Class IV

A vehicular gate operator (or system) intended for use in a guarded industrial location or building such as an airport security area or other restricted access locations not servicing the general public, in which unauthorized access is prevented via supervision by security personnel.

This table illustrates the entrapment protection requirements for each of the four UL 325 classes.

UL 325 Classifications	Horizontal Slide, Vertical Lift, Vertical Pivot		Swing and Vertical Barrier (arm)	
	Primary Protection	Secondary Protection	**Primary Protection**	Secondary Protection
Class I and II	**A**	B1, B2 or D	**A or C**	A, B1, B2, C or D
Class III	**A, B1 or B2**	A, B1, B2, D or E	**A, B1, B2 or C**	A, B1, B2, C or D
Class IV	**A, B1, B2 or D**	A, B1, B2, D or E	**A, B1, B2, C or D**	A, B1, B2, C, D or E

A - Inherent entrapment protection system.
B1 - Provision for connection of, or supplied with, a non-contact sensor (photoelectric sensor or the equivalent). When used as the PRIMARY device, must be monitored.
B2 - Provision for connection of, or supplied with, a contact sensor (edge device or the equivalent). When used as the PRIMARY device, must be monitored.
C - Inherent adjustable clutch or pressure relief device.
D - Provision for connection of, or supplied with, an actuating device requiring continuous pressure to maintain opening or closing motion of the gate.
E - An inherent audio alarm.

Glossary

GATE - A moving barrier such as a swinging, sliding, raising, lowering, or the like, barrier, that is a stand-alone passage barrier or is that portion of a wall or fence system that controls entrance and/or egress by persons or vehicles and completes the perimeter of a defined area.

RESIDENTIAL VEHICULAR GATE OPERATOR – CLASS I - A vehicular gate operator (or system) intended for use in a home of one-to four single family dwelling, or garage or parking area associated therewith.

COMMERCIAL / GENERAL ACCESS VEHICULAR GATE OPERATOR - CLASS II - A vehicular gate operator (or system) intended for use in a commercial location or building such as a multi-family housing unit (five or more single family units), hotels, garages, retail store, or other building servicing the general public.

INDUSTRIAL / LIMITED ACCESS VEHICULAR GATE OPERATOR - CLASS III - A vehicular gate operator (or system) intended for use in an industrial location or building such as a factory or loading dock area or other locations not intended to service the general public.

RESTRICTED ACCESS VEHICULAR GATE OPERATOR - CLASS IV - A vehicular gate operator (or system) intended for use in a guarded industrial location or building such as an airport security area or other restricted access locations not servicing the general public, in which unauthorized access is prevented via supervision by security personnel.

VEHICULAR BARRIER (ARM) OPERATOR (OR SYSTEM) - An operator (or system) that controls a cantilever type device (or system), consisting of a mechanical arm or barrier that moves in a vertical arc, intended for vehicular traffic flow at entrances or exits to areas such as parking garages, lots or toll areas.

VEHICULAR HORIZONTAL SLIDE-GATE OPERATOR (OR SYSTEM) - A vehicular gate operator (or system) that controls a gate which slides in a horizontal direction that is intended for use for vehicular entrance and exit to a drive, parking lot, or the like.

VEHICULAR SWING-GATE OPERATOR (OR SYSTEM) - A vehicular gate operator (or system) that controls a gate which moves in an arc in a horizontal plane that is intended for use for vehicular entrance and exit to a drive, parking lot, or the like.

SYSTEM - In the context of these requirements, a system refers to a group of interacting devices intended to perform a common function.

WIRED CONTROL - A control implemented in a form of fixed physical interconnections between the control, the associated devices, and an operator to perform predetermined functions in response to input signals.

WIRELESS CONTROL - A control implemented in means other than fixed physical interconnections (such as radio waves or infrared beams) between the control, the associated devices, and an operator to perform predetermined functions in response to input signals.

INHERENT ENTRAPMENT PROTECTION SYSTEM - A system, examples being a motor current or speed sensing system, which provides protection against entrapment upon sensing an object and is incorporated as a permanent and integral part of the operator.

EXTERNAL ENTRAPMENT PROTECTION DEVICE - A device, examples being an edge sensor, a photoelectric sensor, or similar entrapment protection device, which provides protection against entrapment when activated and is not incorporated as a permanent part of an operator.

ENTRAPMENT - The condition when an object is caught or held in a position that increases the risk of injury.

Slide Gate Requirements

The operator is intended for installation only on gates used for vehicles. Pedestrians must be supplied with a separate access opening. The pedestrian access opening shall be designed to promote pedestrian usage. Locate the gate such that persons will not come in contact with the vehicular gate during the entire path of travel of the vehicular gate. (ref. UL 325 56.8.4.b)

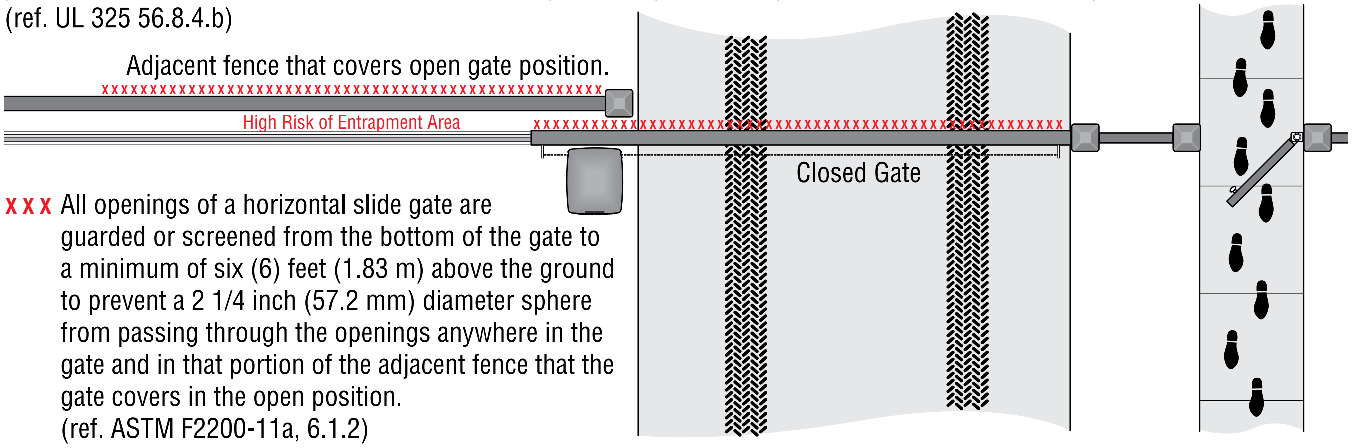

x x x All openings of a horizontal slide gate are guarded or screened from the bottom of the gate to a minimum of six (6) feet (1.83 m) above the ground to prevent a 2 1/4 inch (57.2 mm) diameter sphere from passing through the openings anywhere in the gate and in that portion of the adjacent fence that the gate covers in the open position. (ref. ASTM F2200-11a, 6.1.2)

Compliant openings less than 2 1/4".

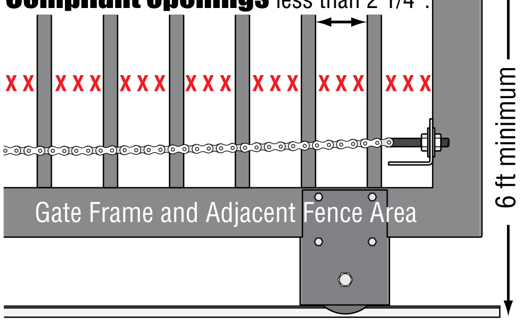

Non-compliant openings wider than 2 1/4".

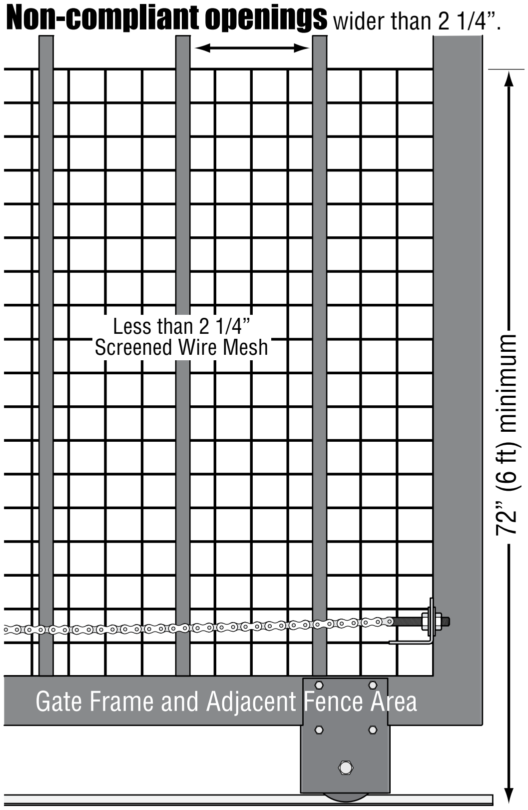

Note: Install screened wire mesh to a non-compliant gate **AND** non-compliant adjacent fence that covers open gate position (See above).

A gap, measured in the horizontal plane parallel to the roadway, between a fixed stationary object nearest the roadway (such as a gate support post) and the gate frame when the gate is in either the fully open position or the fully closed position, shall not exceed 2 1/4 inch (57.2 mm). (ref. ASTM F2200 6.1.4)

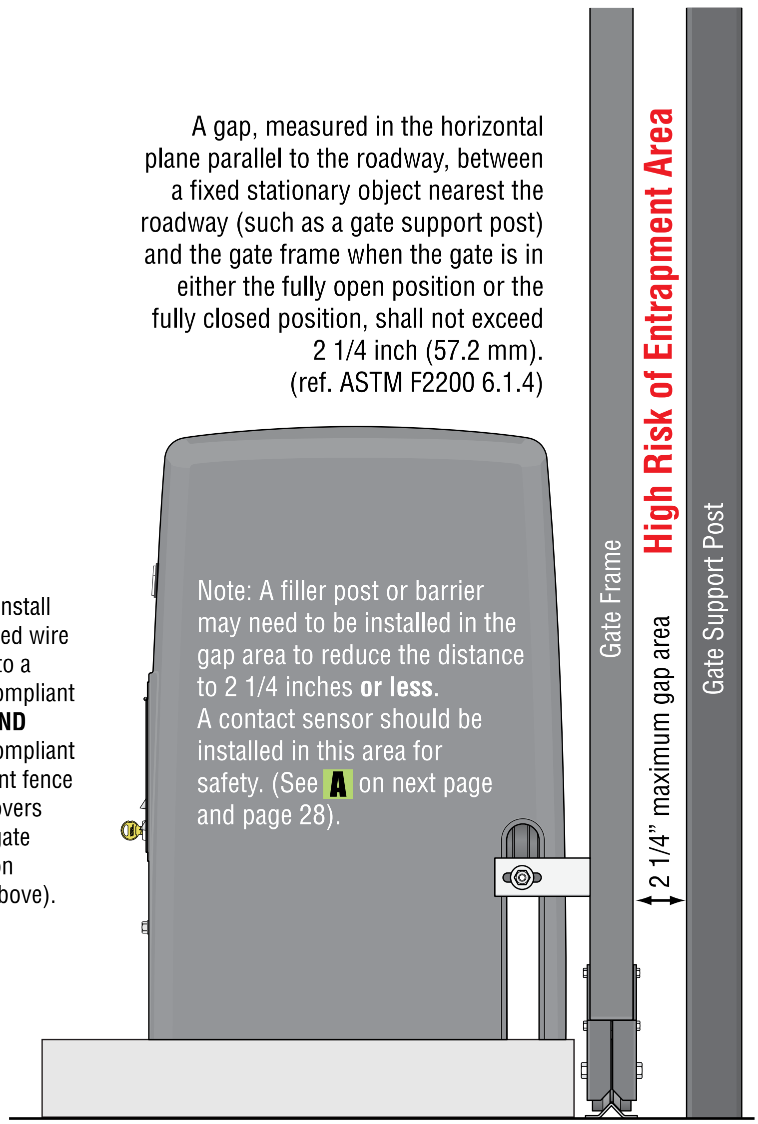

9000-065-L-12-12

Slide Gate Protection

Entrapment protection devices are required to reduce the risk of injury. Install sensors where the risk of entrapment or obstruction exists while gate is moving. Individual requirements will vary.

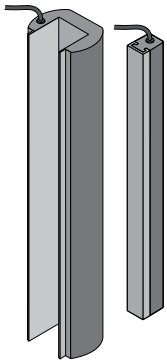

Contact Sensor (Reversing Edges)

A Installed on the fence to help minimize the potential of entrapment between the gate and fence. A filler post or barrier may need to be installed between fence and gate.

B Helps minimize the potential of entrapment during the back travel of the gate.

C Minimizes the potential of the gate closing on vehicular or other traffic that loops cannot sense.

Non-Contact Sensors (Photo Sensors)

1 Minimizes the potential of the gate closing on vehicular or other traffic that loops cannot sense.

2 Helps minimize the potential of entrapment during the back travel (Opening) of the gate.

Warning Signs

Permanently mounted and easily visible from either side of the gate.

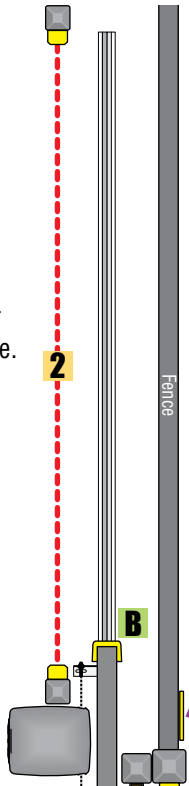

Automatic Exit Loop

(Optional) will provide an open command to the gate operator(s) when a vehicle is exiting the property.

Secure Side of Gate

Reverse Loop

Minimizes the potential of the gate closing when a vehicle is present. Number and placement of loops is dependent on the application.

Reverse Loop

Minimizes the potential of the gate closing when a vehicle is present. Number and placement of loops is dependent on the application.

Non-Secure Side of Gate

See pages 27-30 for typical layout locations.

Warning Sign

C

Fence

Separate Pedestrian Walkway

Located so pedestrians cannot come in contact with the vehicular gate.

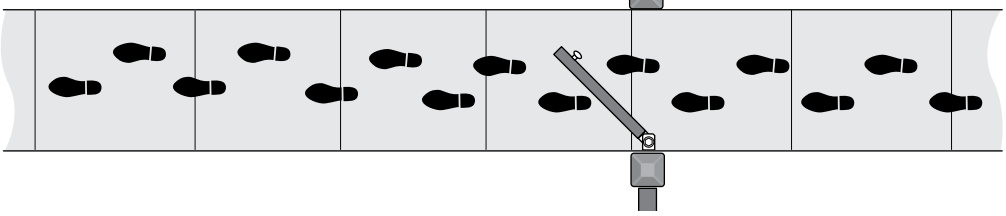

SECTION 1 - INSTALLATION

Prior to beginning the installation of the slide gate operator, we suggest that you become familiar with the instructions, illustrations, and wiring guide-lines in this manual. This will help insure that your installation is performed in an efficient and professional manner compliant with UL 325 safety and ASTM F2200 construction standards.

The proper installation of the vehicular slide gate operator is an extremely important and integral part of the overall access control system. ***Check all local building ordinances and building codes prior to installing this operator. Be sure your installation is in compliance with local codes.***

1.1 Hardware for the Gate

Good hardware is essential for proper operation of a sliding gate. DoorKing has a full line of gate hardware products that will ensure safe, reliable and long lasting gate operation. The gate must be properly installed and roll smoothly in both directions.

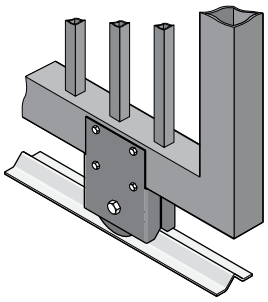

Roller Bearing V-Wheels with Protective Cover - Helps to minimize a pinch point on the gate's wheel and V-rail.

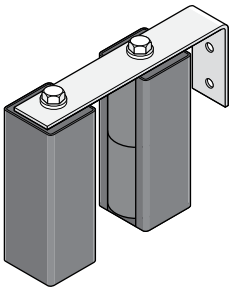

Guide Rollers with Protective Covers - Helps to minimize a pinch point on the gate.

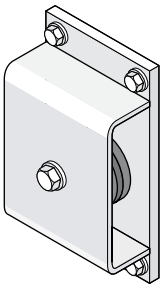

Endless Idler Assembly with Protective Cover - Helps to minimize a pinch point for a 180° chain return.

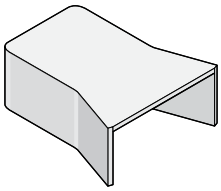

Gate End Retainer - Helps stabilize the end of the gate in the open or closed position.

1.2 Underground Conduit Requirements

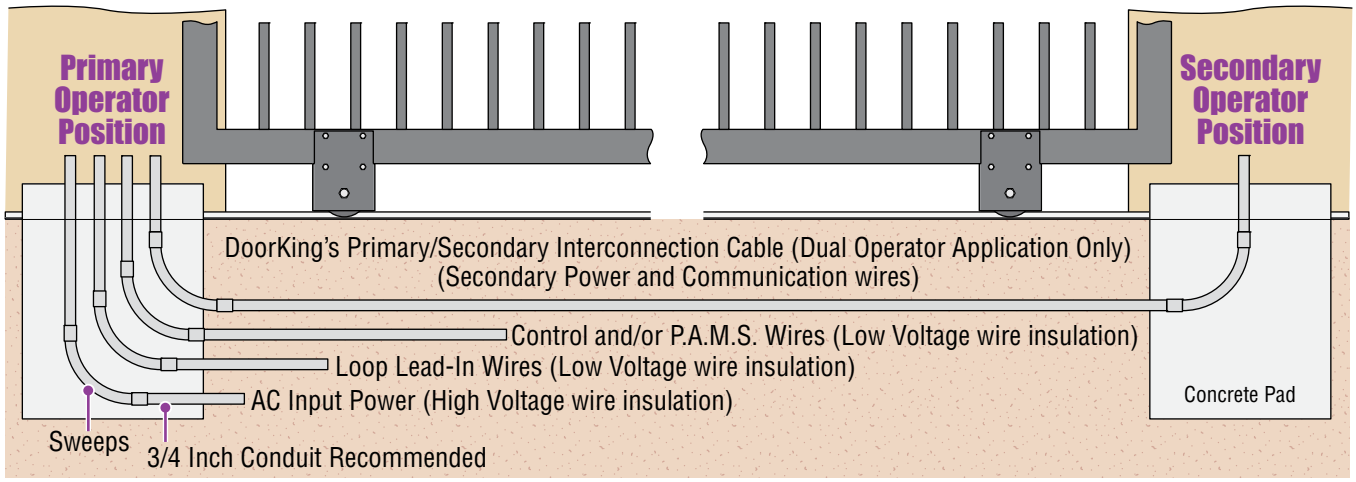

- The conduit requirements are for a typical slide gate operator installation (the secondary operator is shown for those applications where a secondary operator may be used). **The conduit requirements for your application may vary from this depending on your specific needs.**
- Use only sweeps for conduit bends. Do not use 90° elbows as this will make wire pulls very difficult and can cause damage to wire insulation.
- DoorKing recommends using 3/4-inch conduit.
- Be sure that all conduits are installed in accordance with local codes.
- **Never** run low voltage rated wire insulation in the same conduit as high voltage rated wire insulation.

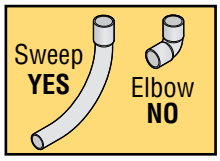

1.3 Typical Gate Types

The Model 9000 operator is designed to be installed on any of these gate types. See the next 3 pages for specific operator mounting positions.

- Steel or Aluminum.
- 1,500 lb max. weight per gate (1 HP motor).
- Chain tray recommended for gates over 20 ft.
  (Post mount installation when using a chain tray.)
- Single operator - 35 ft max gate length.
  Dual operators - 70 ft max gate length.

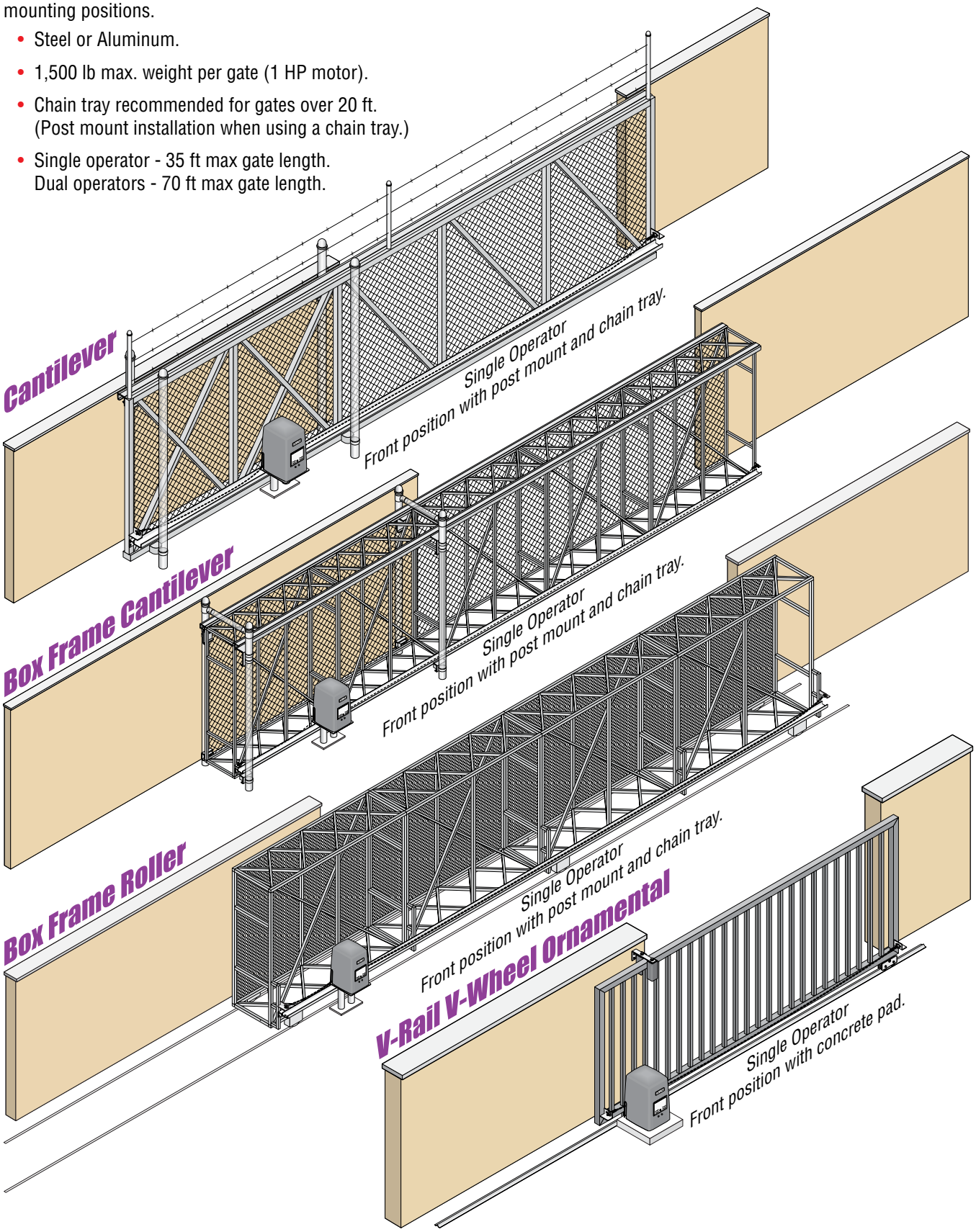

1.4 Operator Mounting Positions

The Model 9000 operator is designed to be installed in the front, rear and center mounting positions shown on this page and the next 2 pages. V-wheel V-rail ornamental gates are shown as examples but other gate types on the previous page can use the same mounting setups. Once the mounting position has been selected, refer to pages 15 thru 18 for specific installation instructions.

Front Position with Concrete Pad

Standard method of installation.

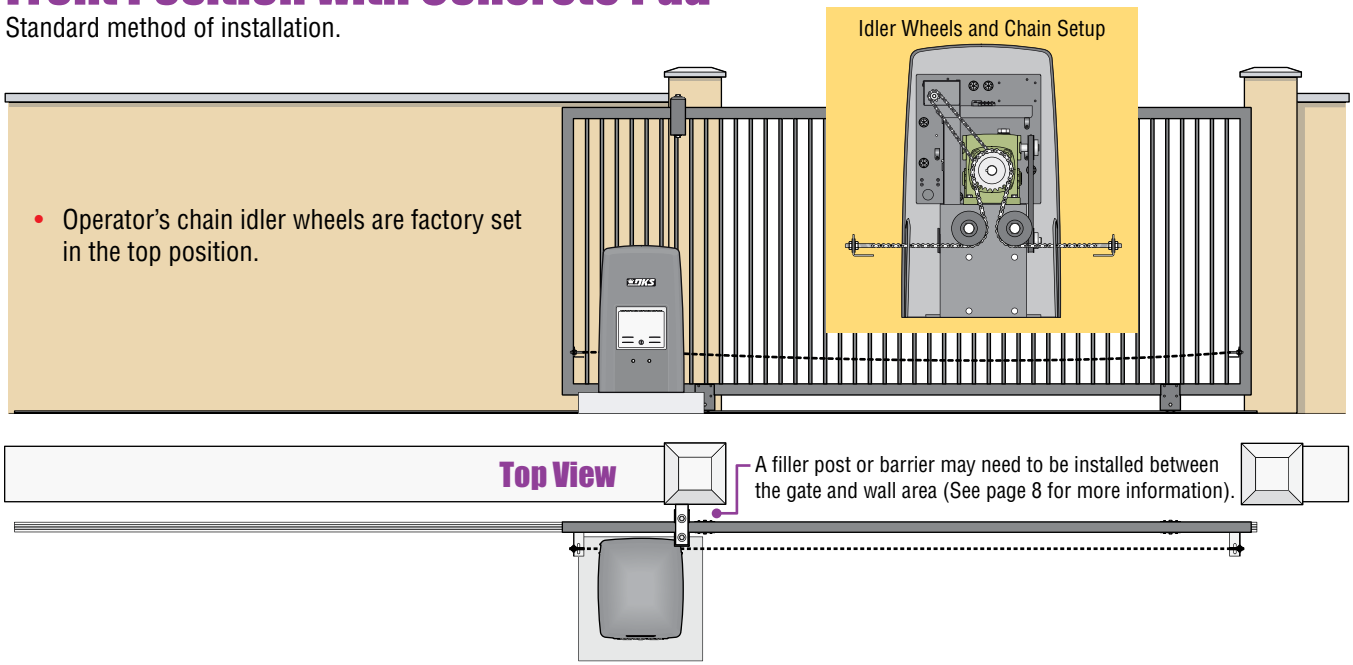

- Operator's chain idler wheels are factory set in the top position.

Front Position with Post Mount Kit

Raises operator and allows different chain heights.

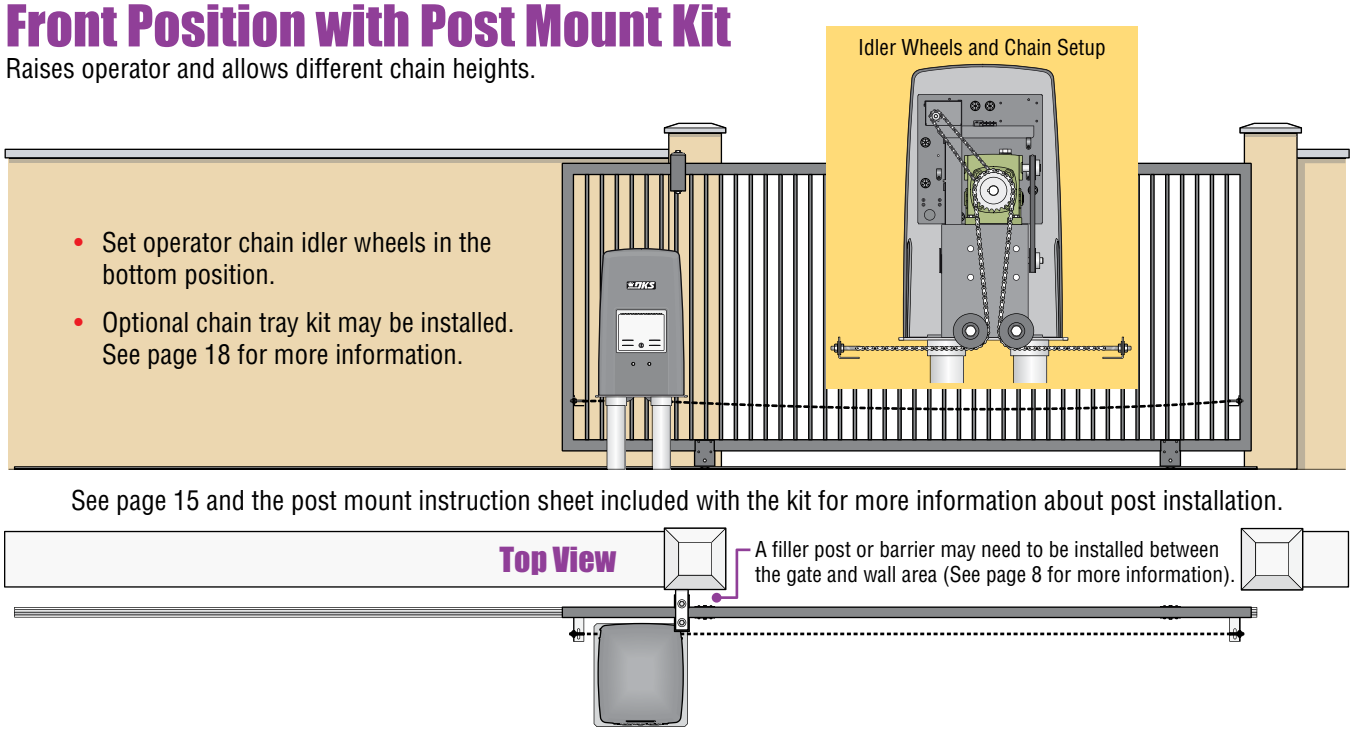

- Set operator chain idler wheels in the bottom position.
- Optional chain tray kit may be installed. See page 18 for more information.

See page 15 and the post mount instruction sheet included with the kit for more information about post installation.

Additional hardware required. Post mount kit (P/N 9000-015).

Rear Position with Concrete Pad

Hides the chain from outside the property looking in.

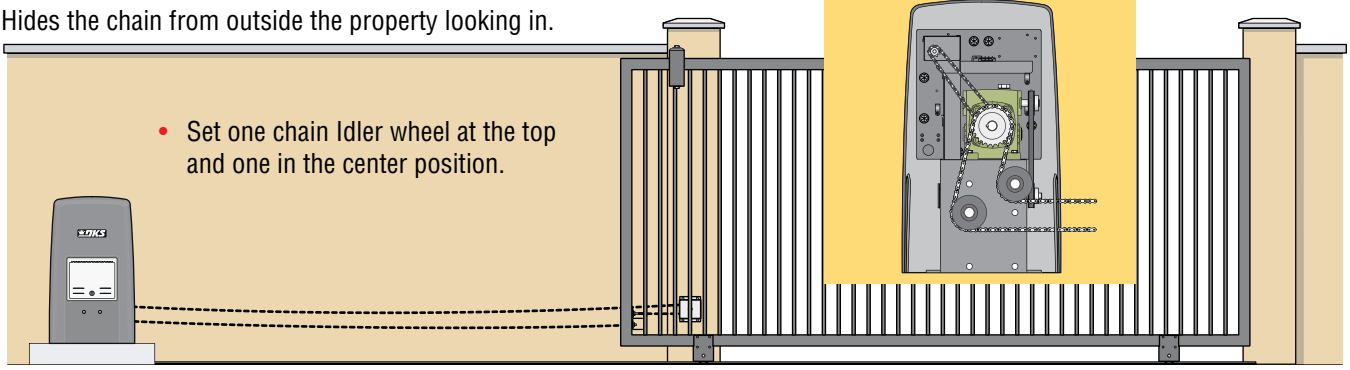

- Set one chain Idler wheel at the top and one in the center position.

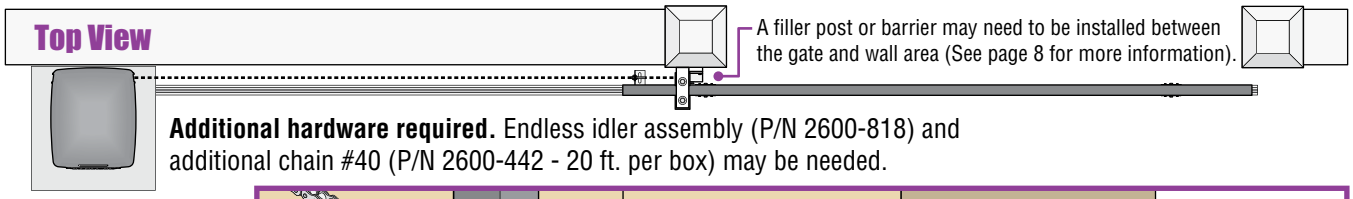

Additional hardware required. Endless idler assembly (P/N 2600-818) and additional chain #40 (P/N 2600-442 - 20 ft. per box) may be needed.

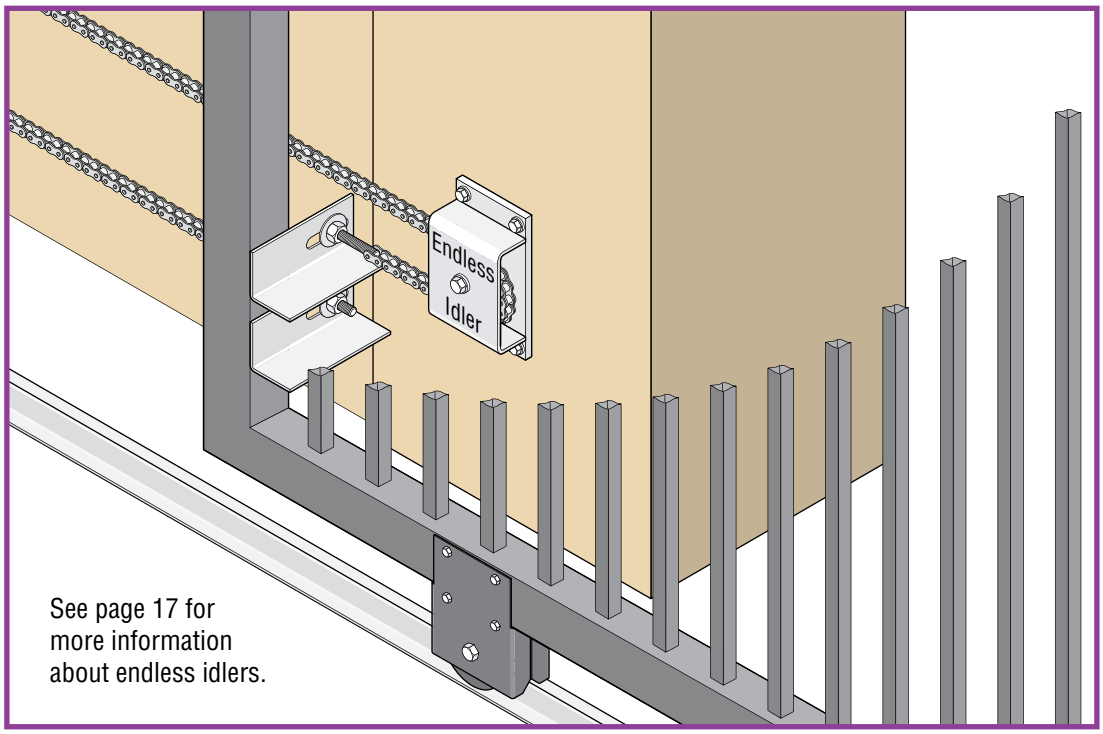

See page 17 for more information about endless idlers.

Rear Position with Post Mount Kit

Raises operator and allows different chain heights.

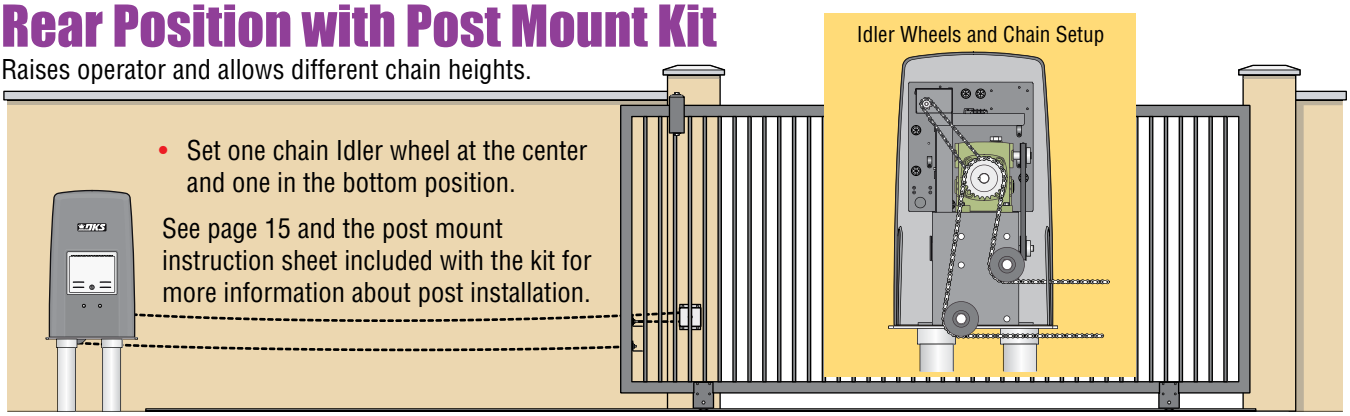

- Set one chain Idler wheel at the center and one in the bottom position.

See page 15 and the post mount instruction sheet included with the kit for more information about post installation.

Additional hardware required. Post mount kit (P/N 9000-015). Endless idler assembly (P/N 2600-818) and additional chain #40 (P/N 2600-442 - 20 ft. per box) may be needed.

Center Position with Post Mount Kit

Hides the chain from outside the property looking in. Allows the use of DoorKing's chain tray kit to attach to gate. This is useful with long gates. It supports the chain's weight and helps prevent chain "stretching".

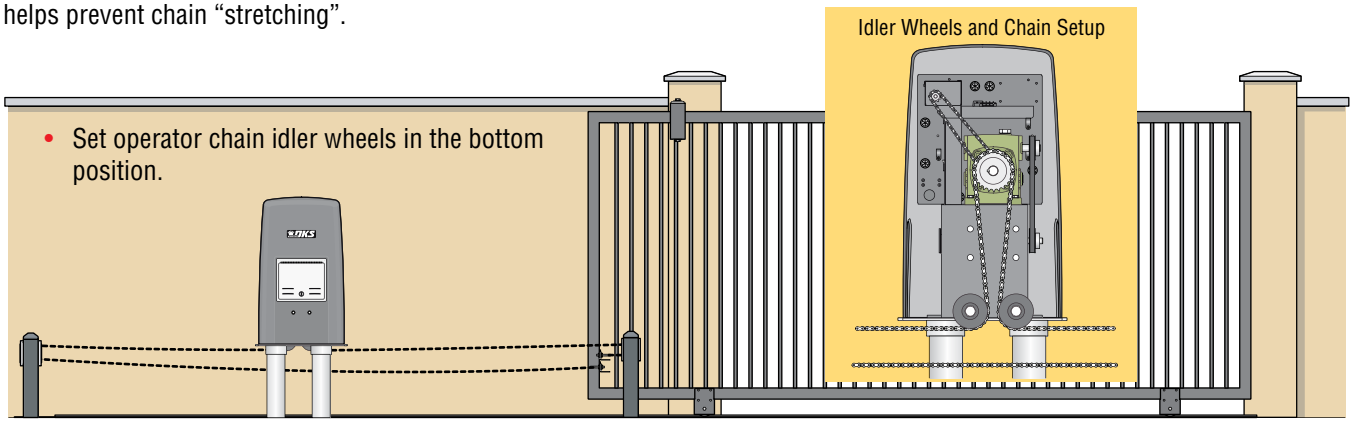

See next page and the post mount instruction sheet included with the kit for more information about post installation.

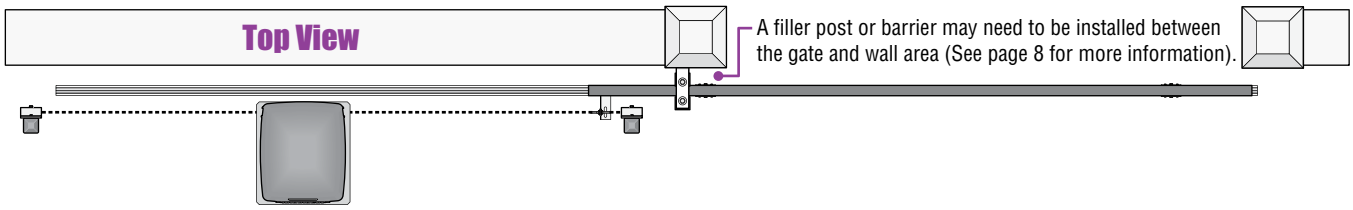

Additional hardware required. Post mount kit (P/N 9000-015). Endless idler assembly (P/N 2600-818) and additional chain #40 (P/N 2600-442 - 20 ft. per box) may be needed.

Gate in Open Position

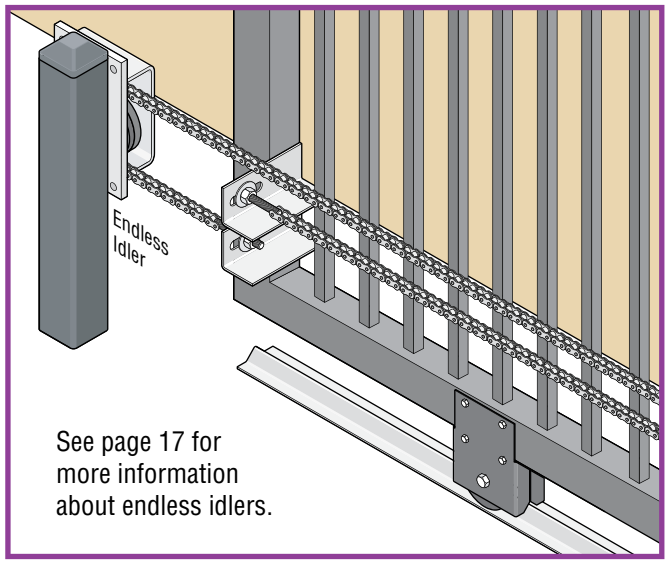

Gate in Close Position

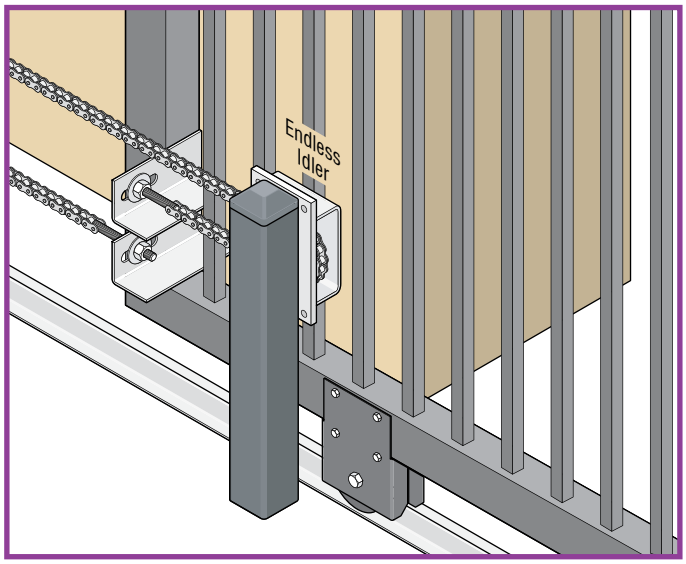

DoorKing's Chain Tray Kit for Long Gates

See page 18 for more information.

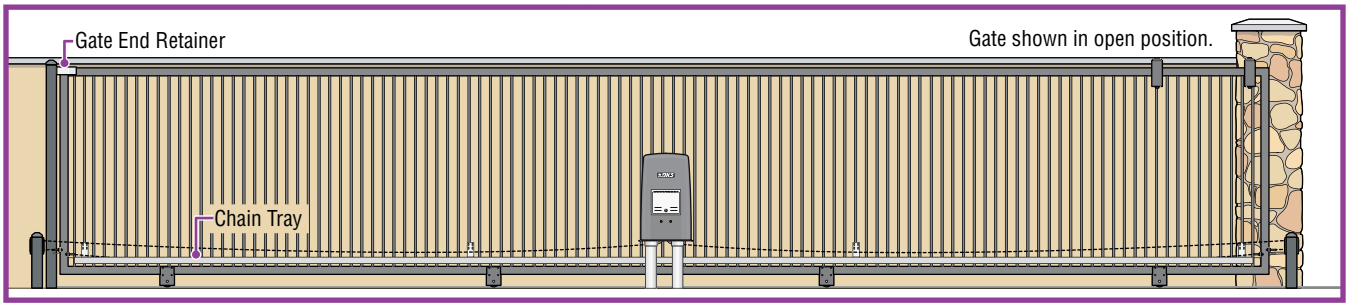

1.5 Concrete Pad Setup or Post Mounting

Concrete Pad Setup

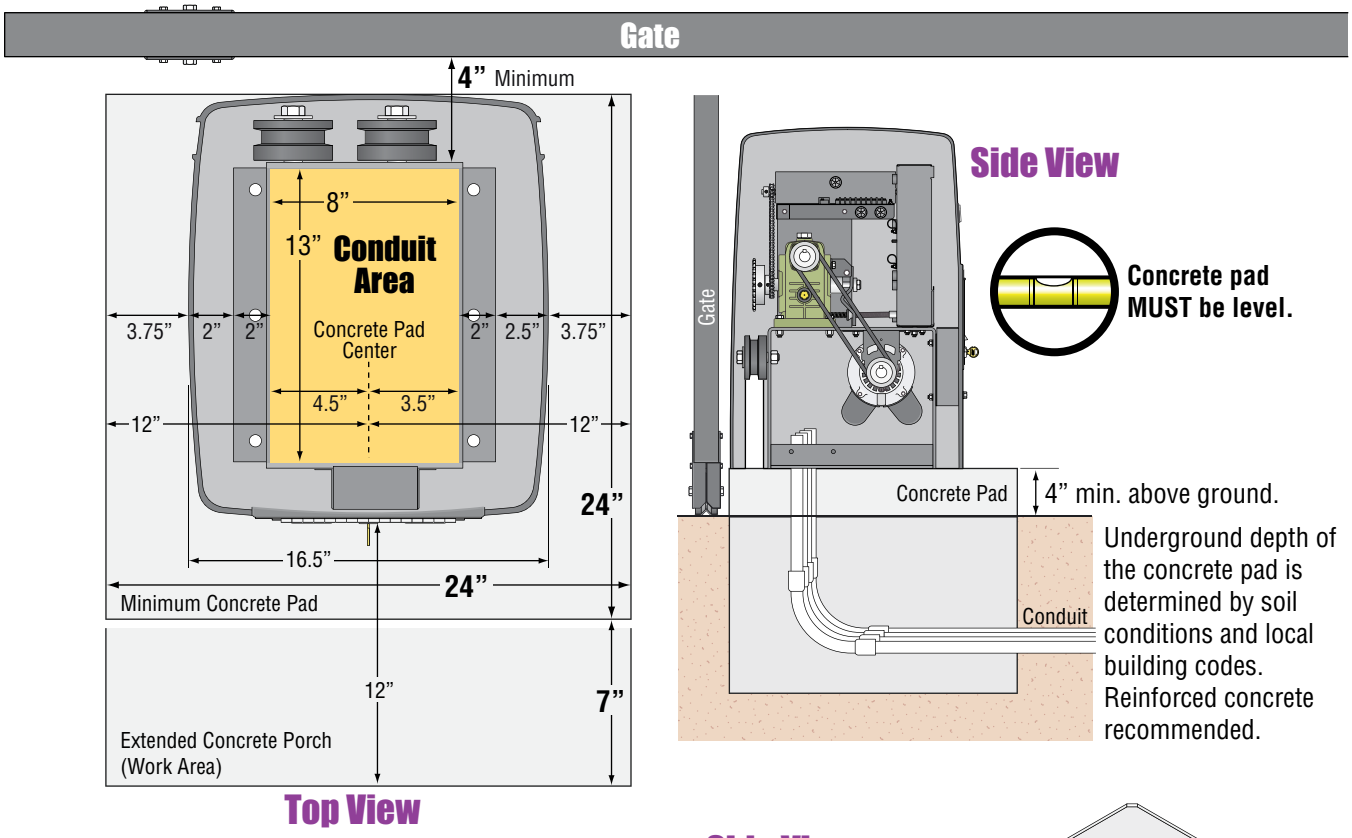

Optional Post Mount Kit

DoorKing offers a post mount kit specifically for the Model 9000 (P/N 9000-015). The kit includes a base plate, 2 posts and hardware to attach the operator to the base plate. This kit will raise the operator and allow different chain heights for specific operator applications. Refer to the instruction sheet provided with the kit for concrete foundation size, conduit type and placement. This kit is needed if a chain tray is required to support the chain's weight when a longer gate is used (See page 18 for more information about DoorKing's chain tray kit).

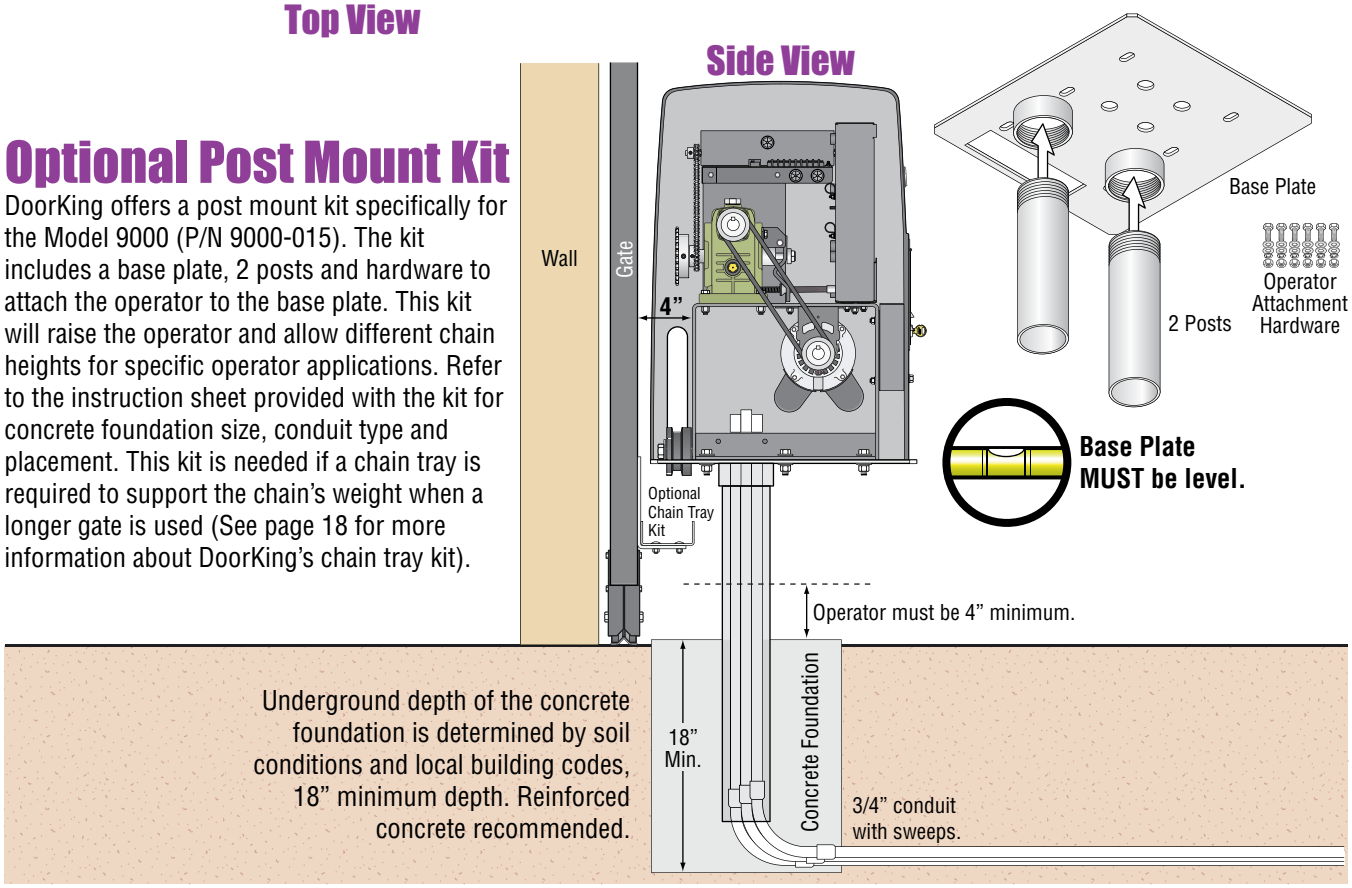

1.6 Positioning Operator and Chain

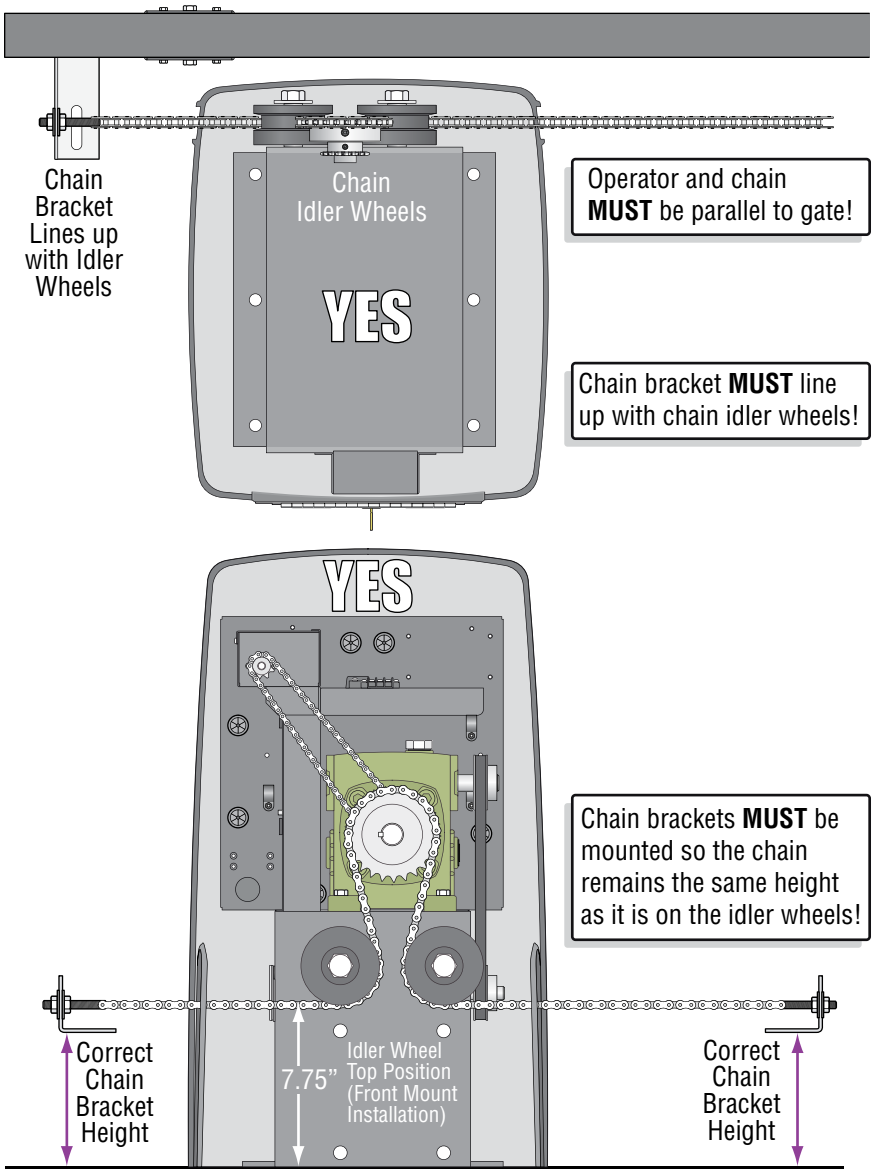

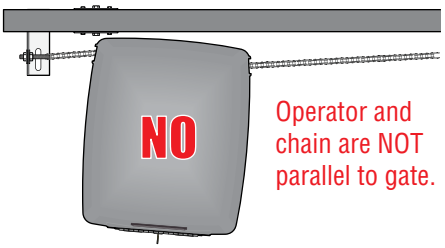

Operator and chain are NOT parallel to gate.

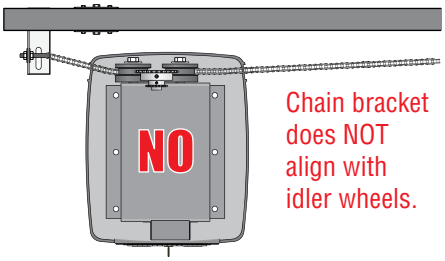

Chain bracket does NOT align with idler wheels.

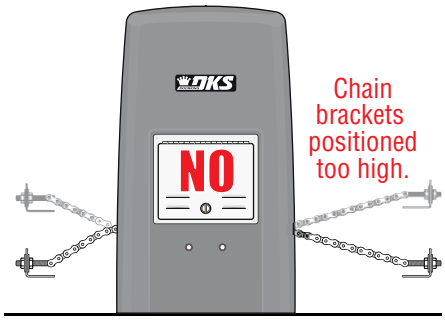

Chain brackets positioned too high.

Chain brackets positioned too low.

1.7 Attaching Operator and Chain

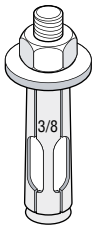

Attaching Operator to Concrete Pad
DoorKing recommends a minimum of four (4) 3/8" x 2" sleeve anchors (not supplied).

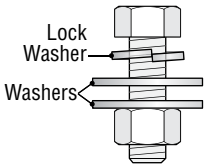

Attaching Operator to Post Mount Plate
Use bolts provided in post mount kit.

Connect Chain Bracket to Gate. Weld completely around bracket. Chain nut and chain bolt should not protrude past gate frame.

Connect Chain to Chain Bracket. Connect chain to chain bolt with master link. Adjust the chain nuts to tighten the chain. The chain should sag no more than one (1) inch per 10 feet of travel. **Do not over tighten the chain.**

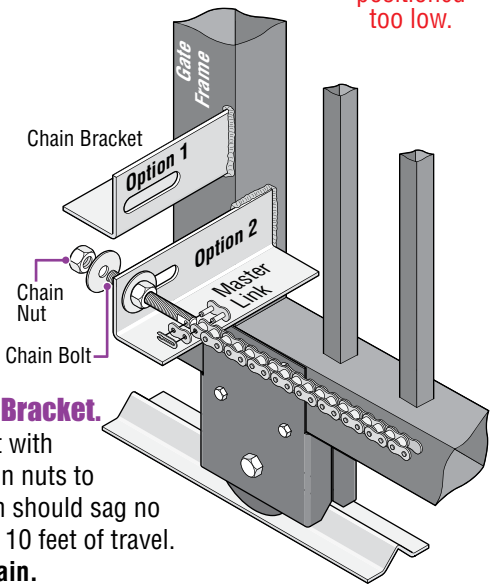

1.8 Endless Idler Assembly (On Select Installations)

DoorKing offers an endless idler assembly with a protective cover designed for the Model 9000 installations (P/N 2600-818). Make sure the endless idler assembly is **securely** fastened to the wall or post (Depending on which type of installation will be used). Extreme force will be exerted on this assembly during gate cycling.

Center and Rear Mount Positions (Top View)

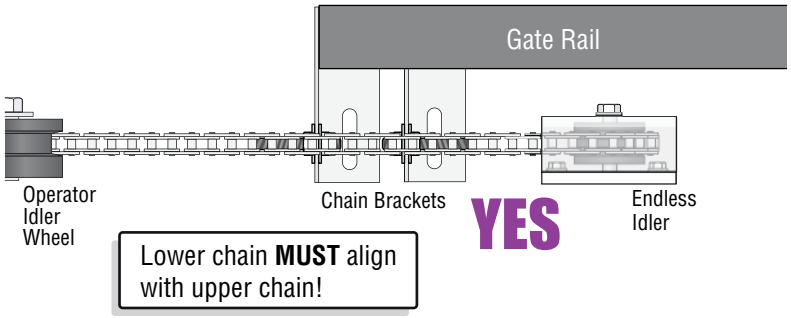

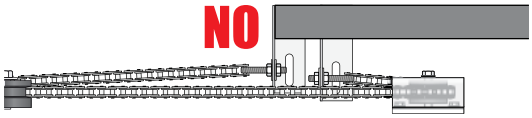

Lower chain does NOT align with upper chain.
Note: Be sure that the chain is aligned and parallel to the gate. Installing the chain in any other manner will cause excessive noise, chain idler wheel wear and chain stretching.

Center Mount Position (Side View)

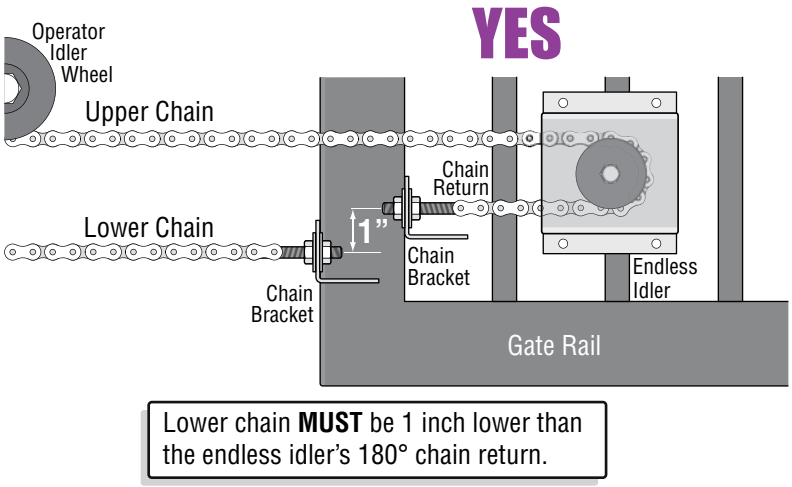

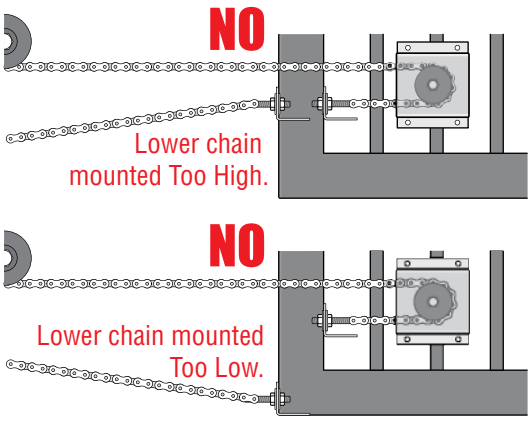

Rear Mount Position (Side View)

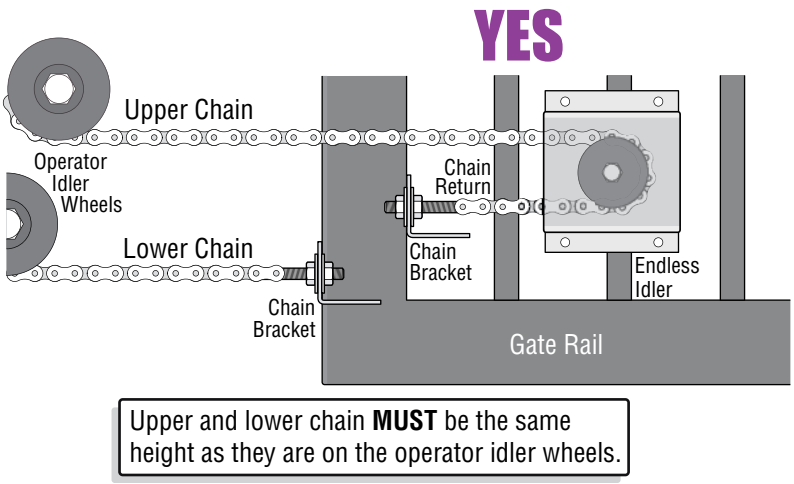

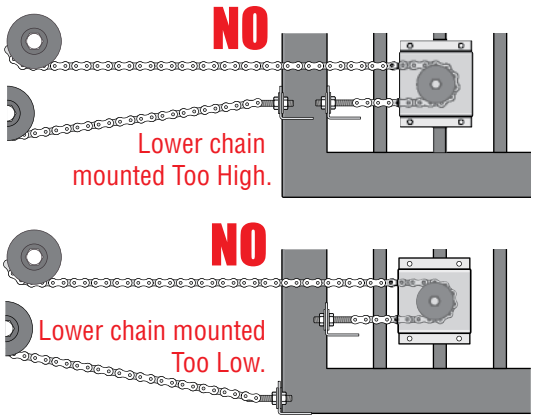

1.9 DoorKing's Chain Tray Kit

A chain tray is recommended for gates longer than 20 ft. to support the weight of the chain. DoorKing offers a chain tray kit in 10 ft. sections to fit any length gate. (DoorKing P/N 2601-270 10 Ft. section)

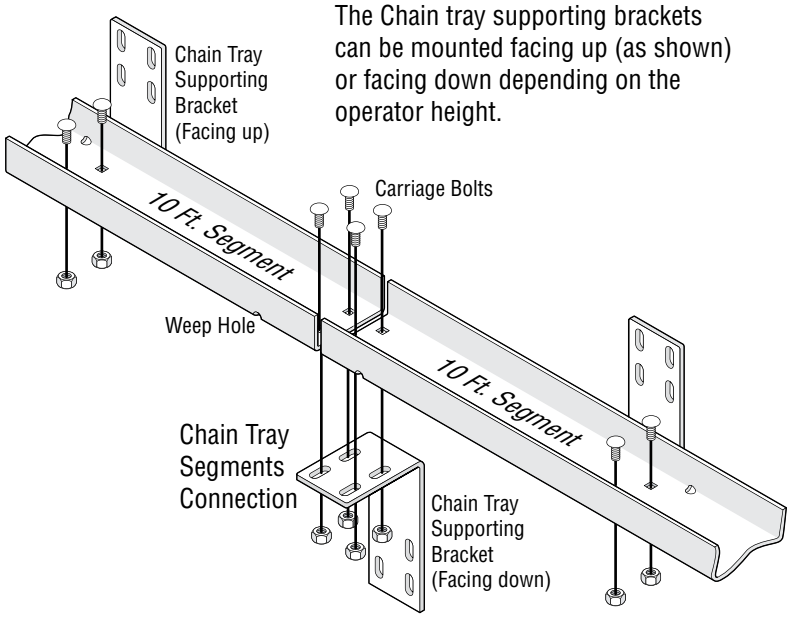

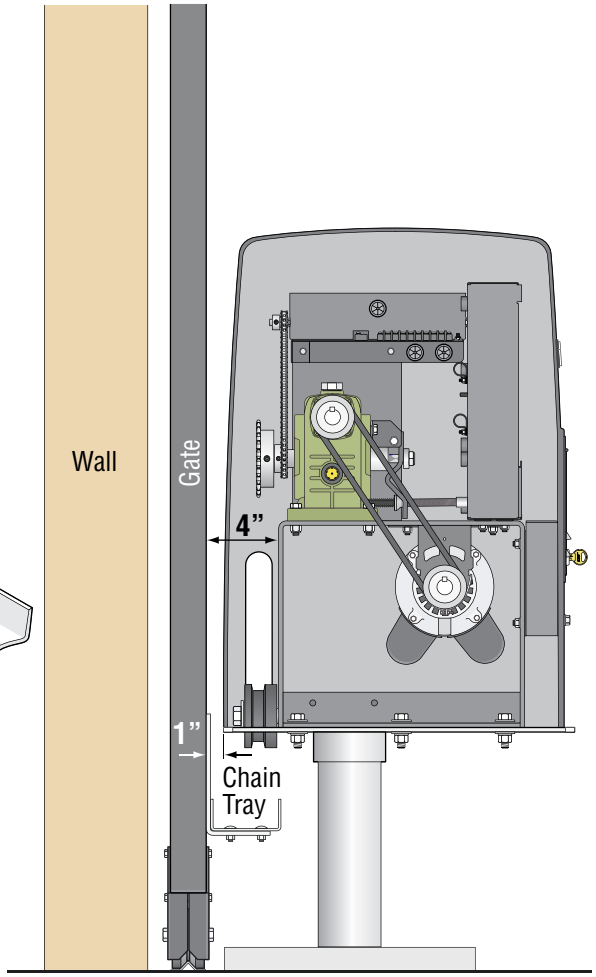

For further information about the chain tray installation, refer to instructions provided with the chain tray kit.

1.10 Installation of Warning Signs

This DoorKing Slide Gate Operator is shipped with two warning signs. The purpose of the warning sign is to alert uninformed persons, and to remind persons familiar with the gate system, that a possible hazard exists so that appropriate action can be taken to avoid the hazard or to reduce exposure to the hazard. See page 9 for suggested mounting positions of signs.

- **Permanently install the supplied warning signs in locations so that the signs are visible by persons on both sides of the gate.**
- Use appropriate hardware such as wood or sheet metal screws (not supplied) to install the warning signs.

SECTION 2 - AC POWER TO OPERATOR(S)

Before attempting to connect any wiring to the operator, be sure that the circuit breaker in the electrical panel is in the OFF position. Permanent wiring must be installed to the operator as required by local electrical codes. It is recommended that a licensed electrical contractor perform this work.

Since building codes vary from city to city, we highly recommend that you check with your local building department prior to installing any permanent wiring to be sure that all wiring to the operator (both high and low voltage) complies with local code requirements.

THIS GATE OPERATOR MUST BE PROPERLY GROUNDED!!

2.1 AC Power Wire Runs and Terminal Connection

If power wiring is greater than the maximum distance shown, it is recommended that a service feeder be installed. When large gauge wire is used, a separate junction box must be installed for the operator connection. The wire table is based on stranded copper wire. Wire run calculations are based on an AC power source with a 3% voltage drop on the power line, plus an additional 10% reduction in distance to allow for other losses in the system.

This table illustrates the high voltage AC power wire size and distance limitations.

Never run low voltage rated wire insulation in the same conduit as high voltage rated wire insulation.

	Amps	Wire Size / Max Distance in Feet			
		12 AWG	10 AWG	8 AWG	6 AWG
1/2 HP: 115 VAC Single Phase	5.4	170	275	460	685
1 HP: 115 VAC Single Phase	9.7	100	170	280	520

Reduce the wire distance in half for primary/secondary dual gate application.

"Optional" High Voltage Kit Installation Note: When installing a high voltage kit for 208/230/460/575 VAC input power, refer to the **"high voltage AC power wire size and distance limitations"** table on the instruction sheet with the high voltage kit (P/N 2600-266) for AC power wire run limitations.

"Optional" Heater Installation Note: When installing a heater, refer to the **"high voltage AC power wire size and distance limitations"** table on the instruction sheet with the heater kit for AC power wire run limitations.

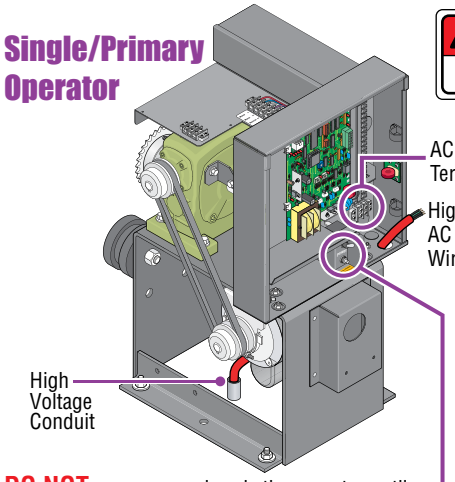

DO NOT power up and cycle the operator until the "**DIP-Switches**" and the "**Limit Switches**" have been adjusted. **Damage could occur to the gate and operator.** See pages 22, 23 and 24.

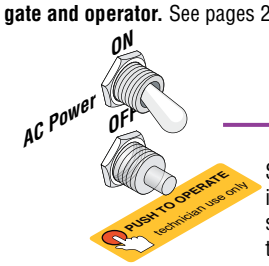

See page 33 for info about power switch and cycling the operator.

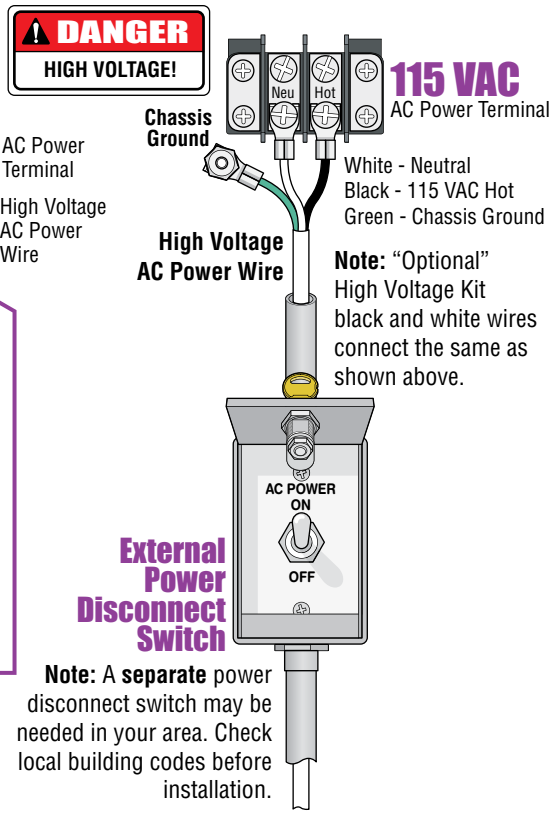

- Route incoming AC power wire through the high voltage conduit and run wire to the operator electronic box.
- Be sure wiring is installed in accordance with local codes. Be sure to color code all wiring.
- It is recommended that a surge suppressor be installed on the high voltage power lines to help protect the operator and circuit board from surges and power fluctuations.
- Secondary operator in a dual operator application gets power through the 8-wire interconnection cable that links the operators together. See 2.2 Primary/Secondary (dual) gate wiring on the next page.

2.2 Bi-Parting Gates Wiring - Dual Gate Operators

Connect the Primary/Secondary operators together with DoorKing's interconnection cable (P/N 2600-75x) as shown. High voltage power and low voltage communications are supplied to the secondary operator by DoorKing's UL approved cable that is run in a single conduit. Two conduits (High voltage and low voltage) will need to be provided to the secondary operator when NOT using DoorKing's UL listed, wet environment interconnection cable.

Primary Operator Control Board (4405)

- All control, loop detector, safety and auxiliary devices are wired to the primary operator. See page 32 for wiring information.

SW 1, switches 1 and 2 will be **opposite** each other. Switch 6 **MUST** be **ON**, see page 22.

Interconnection Cable Wiring

Primary Operator		Secondary Operator
(Red) Motor 1 High	↔	Motor 1 High (Red)
(Blue) Motor 2 High	↔	Motor 2 High (Blue)
(White) Neutral 3 High	↔	Neutral 3 High (White)
(Purple) 24VAC 4 Low	↔	24VAC 4 Low (Purple)
(Yellow) Limit 5 Low	↔	Limit 5 Low (Yellow)
(Brown) Spare 6 Low	↔	Spare 6 Low (Brown)
(Orange) Limit 7 Low	↔	Limit 7 Low (Orange)
(Gray) COM 8 Low	↔	COM 8 Low (Gray)

Secondary Operator Terminal

- Secondary operator contains NO control board.

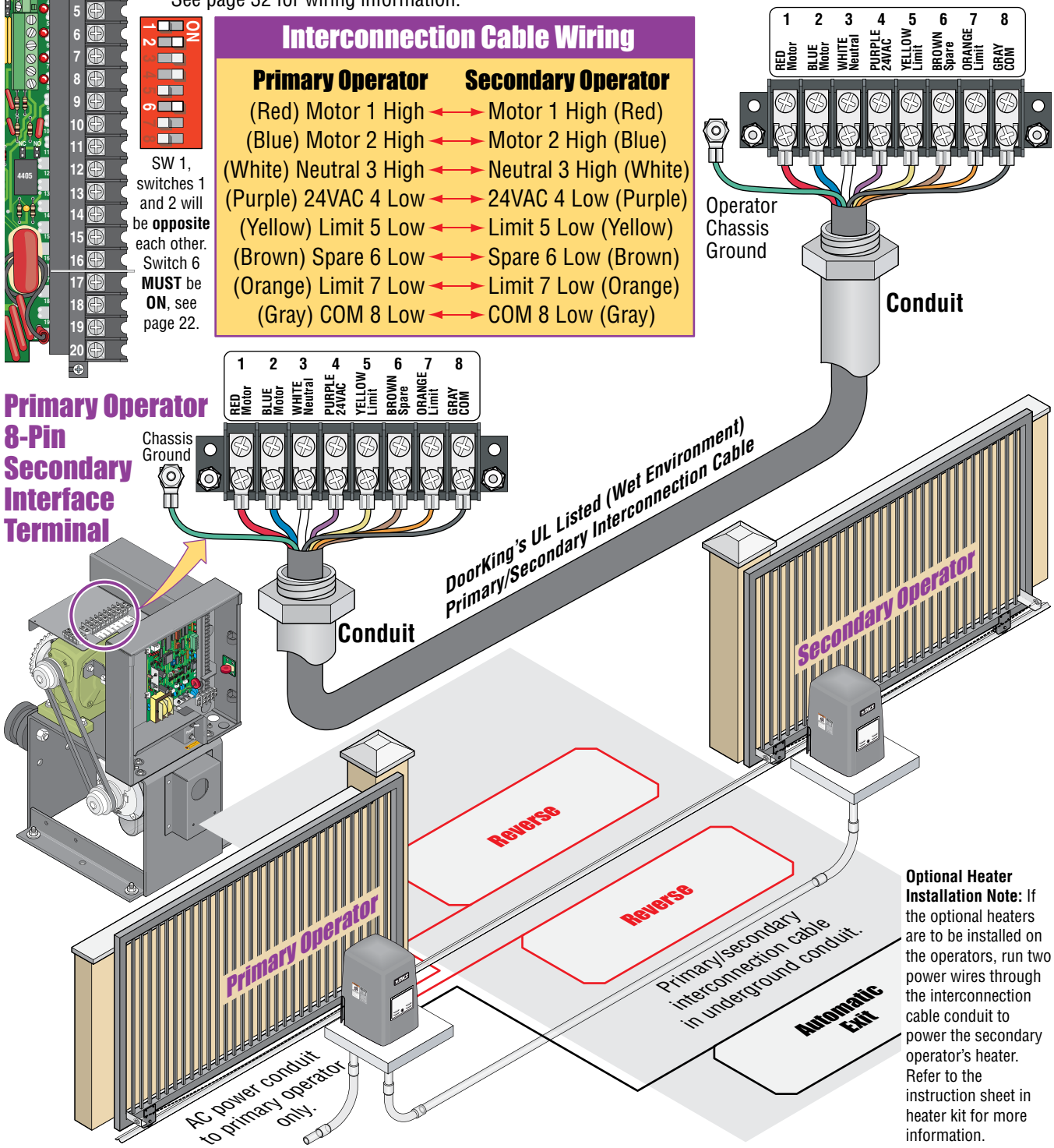

Optional Heater Installation Note: If the optional heaters are to be installed on the operators, run two power wires through the interconnection cable conduit to power the secondary operator's heater. Refer to the instruction sheet in heater kit for more information.

SECTION 3 - ADJUSTMENTS

The switch settings and adjustments in this chapter should be made after your installation and wiring to the operator(s) is complete. **Whenever any of the programming DIP-switches on the circuit board are changed, power must be shut-off, and then turned back on for the new setting to take effect.**

3.1 4405 Circuit Board Descriptions and Adjustments

DIP-Switches

Set the DIP-switches on the circuit board to the desired setting. See switch-settings on next 2 pages.

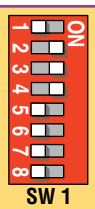

SW 1

SW 2

Auto-Close Timer

Auto-close timer (when turned on) SW 1, switch 4.

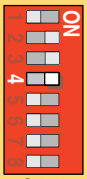

SW 1

Time Delay:
Adjust from 1 second (full counter-clockwise) to approximately 23 seconds (full clockwise).

1 23

How LEDs Function

Illuminated **LEDs** Indicates that low voltage power is being applied to the circuit board.

Input LEDs should be OFF and will only illuminate when the input is activated.
Limit LEDs will only illuminate when the respective limit switch has been activated.
Loop LEDs will only illuminate when a reverse or exit loop is activated (Vehicle passing over a loop).

Single Channel Loop Detectors (Sold separately)

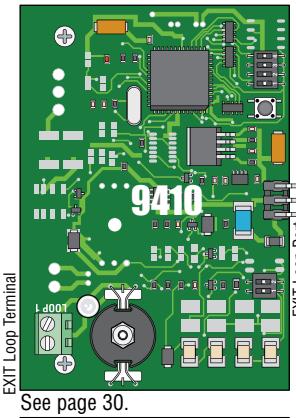

EXIT Loop Terminal

See page 30.

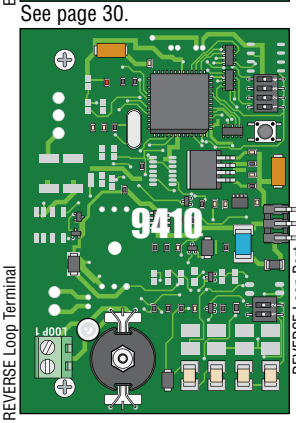

REVERSE Loop Terminal

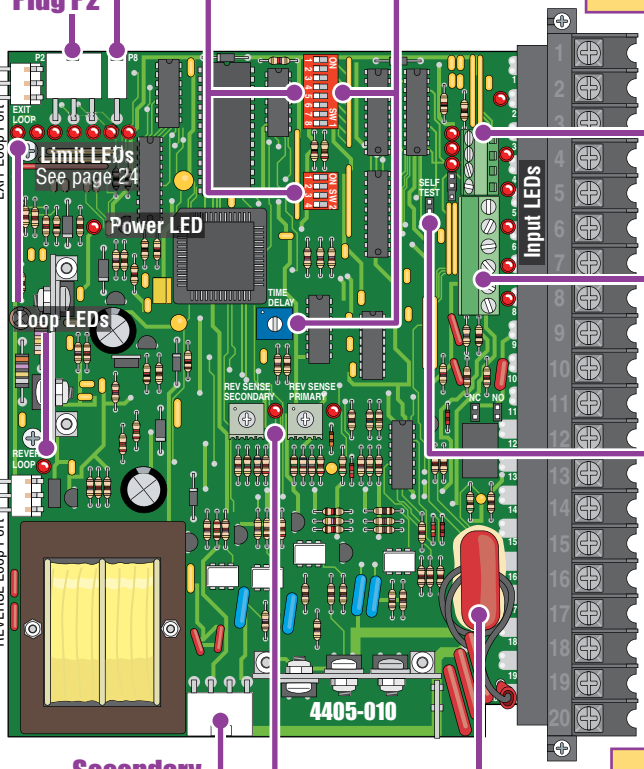

4-Pin Non-Removable Terminal See page 31.

6-Pin UL 325 Removable Terminal See page 27.

Self-Test

Self-Test Mode

Self-test mode is for bench checks ONLY! Operator **MUST** be disconnected from the gate. The operator will continually cycle the gate.

Normal Mode

The jumper must be set at normal mode for normal operater function.

Inherent Reverse Sensors

Adjust reversing sensitivity for the open **AND** close direction of the PRIMARY (single) and SECONDARY (dual) operators, See page 25.

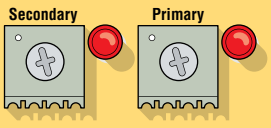

Primary Current Sensor

Uses a sensing coil with a given number of wire turns through it to monitor the current flow of the primary operator motor.

Factory Set:
1/2 HP Motor - 2 Turns
1 HP Motor - 1 Turn

Secondary Current Sensor

Uses a sensing coil with a given number of wire turns through it to monitor the current flow of the secondary operator motor.

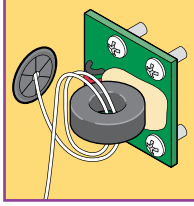

Factory Set:
1/2 HP Motor - 2 Turns
1 HP Motor - 1 Turn

See page 26.

3.2 DIP-Switch Settings for 4405 Circuit Board

The two DIP-switches located on the circuit board are used to program the operator to operate in various modes and to turn on or off various operating features. Whenever a switch setting is changed, power to the operator must be turned OFF and then turned back on for the new setting to take affect. Check and review ALL switch settings prior to applying power to the operator.

SW 1 (Top 8 Switches)			
Switch	**Function**	**Setting**	**Description**
1	**Primary** Operator Opening Direction	Opening direction using **ON** setting. 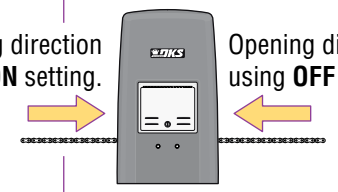 Opening direction using **OFF** setting.	Changes direction operator will cycle open upon initial AC power up and open command.
2	**Secondary** Operator Opening Direction	Opening direction using **ON** setting. 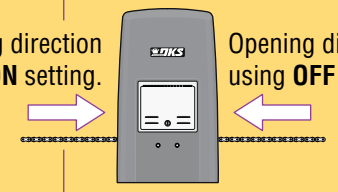 Opening direction using **OFF** setting.	Changes direction operator will cycle open upon initial AC power up and open command.
3	Exit Loop Port Output	OFF	The output wired to terminal #4 becomes the output from the exit loop detector plugged into the EXIT Loop port.
	Full Open Input	ON	**Normal Setting.** Terminal #4 is a normal full open input.
4	Auto-Close Timer	OFF	Auto-close timer is OFF. Manual input required to close gate.
		ON	**Normal Setting.** Auto-close timer is ON. Adjustable from 1-23 seconds.
5	Reverses Gate	OFF	**Normal Setting.** Input to terminal #6 and reverse loop will **reverse** gate during **close** cycle.
	Stops Gate	ON	Input to terminal #6 and/or reverse loop will **stop** gate during **close** cycle – gate will continue to close after input to terminal #6 and/or reverse loop are cleared (Helps prevent tailgating).
6	Single Operator	OFF	**Normal Setting.** Switch must be OFF for single operator.
	Dual Operators	ON	Switch must be ON when primary/secondary (dual) gates are used.
7 and 8	Relay	7-OFF 8-OFF	**Normal Setting.** Relay activates when gate is at open limit.
		7-OFF 8-ON	Relay activates when gate is not closed.
		7-ON 8-OFF	Relay activates when gate is opening and open.
		7-ON 8-ON	Relay activates during opening and closing cycle.

SW 2 (Bottom 4 Switches)			
Switch	**Function**	**Setting**	**Description**
1	Quick-Close Timer Override	OFF	**Normal Setting.** Timer will function normally.
		ON	Opening gate will stop and begin to close as soon as all reversing inputs (Reverse loops, photo sensors) are cleared regardless of the distance the gate has opened.
2	Magnetic lock	OFF	**Normal Setting.** Magnetic lock is not used.
		ON	Magnetic lock is used and connected to terminals 9 and 12. See page 32 for wiring.
3		ON	**Normal Setting.** Switch 3 **MUST** be turned **ON** for Model 9000 operator.
4		OFF	**Normal Setting.** Switch 4 **MUST** be turned **OFF** for Model 9000 operator.

3.2 Continued

Switch Definitions

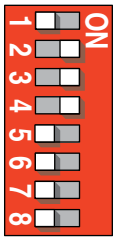

SW 1 (Top 8 Switches)

Typical Settings

Switch 1 **Must OPEN** the primary operator's gate upon initial AC power up and open command. If the first open command begins to close the gate, turn AC power off and reverse this switch.

Switch 2 **Must OPEN** the secondary operator's gate upon initial AC power up and open command. If the first open command begins to close the gate, turn AC power off and reverse this switch. This switch will be set the opposite of switch 1 (eg. If switch 1 is OFF, then switch 2 will be ON).

Switch 3 Determines that a device wired to terminal #4 is a normal full open command **OR** terminal #4 becomes the output from the exit loop detector that is plugged into the EXIT Loop port in the circuit board (Used for specialized functions).

Switch 4 Turns the auto-close timer on or off. Maximum time that the close timer can be set for is approximately 23 seconds.

Switch 5 Determines if an input to terminal #6 (Photo Sensors) **AND/OR** reverse loops will reverse **OR** stop a **CLOSING gate**. A tailgating vehicle **can activate** terminal #6 (Photo sensors) and/or reverse loops **while** the gate is in the closing cycle from the previous vehicle's authorized entry:
If switch 5 is turned **OFF** (Reverse), the closing gate that gets activated by a tailgating vehicle will reverse back to the open position, possibly allowing the tailgating vehicle **unauthorized entry while the gate is reversing back to the open position**.
If switch 5 is turned **ON** (Stop), the closing gate that gets activated by a tailgating vehicle will stop, partially or completely blocking the pathway, **NOT** allowing the tailgating vehicle to enter without proper authorization. The gate will not move until all sensors are clear, usually forcing the tailgating vehicle that activated the sensors to back away from the gate. The gate will then continue until closed, helping prevent the tailgating vehicle from unauthorized entry.

Switch 6 Sets up the circuit board for a single gate operator or primary / secondary (dual) gate operators.

Switches 7-8 These work in conjunction with each other and determine when the relay on the board will be activated. This relay can be used as a switch for various functions such as illuminating a warning light when the gate is moving, or turning on a green light when the gate is full open.

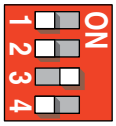

SW 2 (Bottom 4 Switches)

Typical Settings

Switch 1 Turning the quick-close feature on will cause the auto close timer to close the gate after 1 second, regardless of the setting of the auto close timer potentiometer. This will also cause an **opening gate** to stop and reverse when the reverse loops and/or photo sensors are cleared. This feature, along with turning SW 1, switch 5 **ON** above, is useful to help prevent tailgating vehicles from unauthorized entry.

Switch 2 If a magnetic lock is not used with the gate operator, leave this switch in the OFF position. Turn this switch ON if a magnetic lock is used and connected to terminals 9 and 12. This applies magnetic lock power and logic to these terminals (NC).

Switch 3 MUST be turned ON for the Model 9000.

Switch 4 MUST be turned OFF for the Model 9000.

3.3 Limit Switches

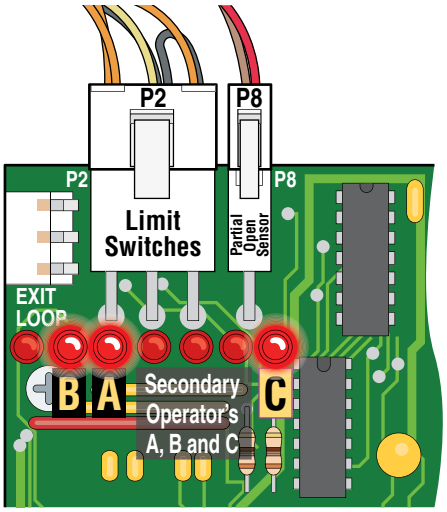

Limit LEDs Upper left corner of Circuit Board.

"Opening Direction" DIP-Switch

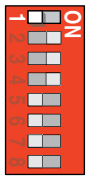

Switch 1 **"OFF"**

A = Close Limit

B = Open Limit

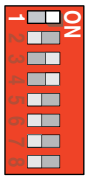

Switch 1 **"ON"**

A = Open Limit

B = Close Limit

Note: SW 1, **Switch 2** - Secondary operator "Opening Direction" functions the same as switch 1.

Full Open and Close Limits MUST be Set

The operator normally stops a cycling gate using the open and close limits. If the limits have not been set, the gate could continue beyond its full open and close positions, damaging the gate and operator. **DO NOT** allow this to occur!

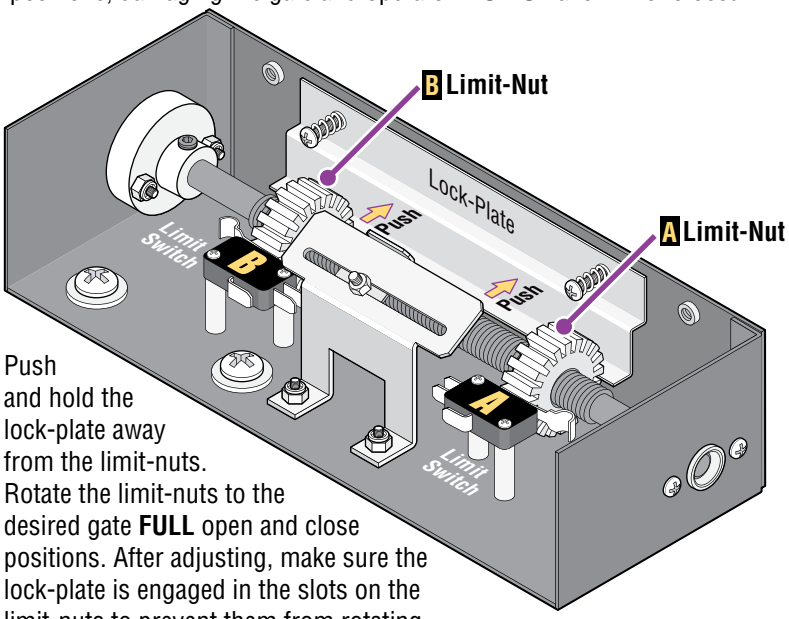

Push and hold the lock-plate away from the limit-nuts. Rotate the limit-nuts to the desired gate **FULL** open and close positions. After adjusting, make sure the lock-plate is engaged in the slots on the limit-nuts to prevent them from rotating.

Note: If P2 and/or P8 plugs are not connected to the circuit board and AC power is turned on, alarm will sound and operator will NOT function.

Partial Open Feature

This feature allows long gates to partially open when a fully open gate is not required for normal use. The FULL open limit switch **MUST** first be set before adjusting the partial open gate position. When the operator's **inherent reversing sensor** gets activated during the gate's **closing cycle**, it will always reverse the gate to the **FULL OPEN** limit switch setting, even when the partial open feature is being used. When using the "Partial Open" feature, **the operator's opening device MUST be connected to the main terminal #5⚠.**
See page 32 for opening device wiring information.

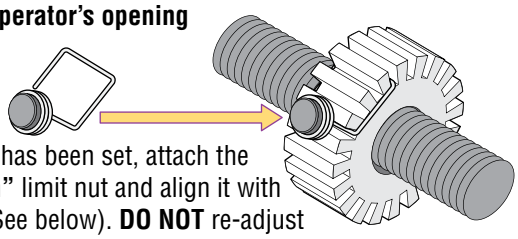

AFTER the full open limit has been set, attach the Magnet Clip to the **"Open"** limit nut and align it with the partial open sensor (See below). **DO NOT** re-adjust the limit nut. Use the partial open assembly for adjustment only.
Note: Magnet clip must be removed before re-adjusting the open limit nut.

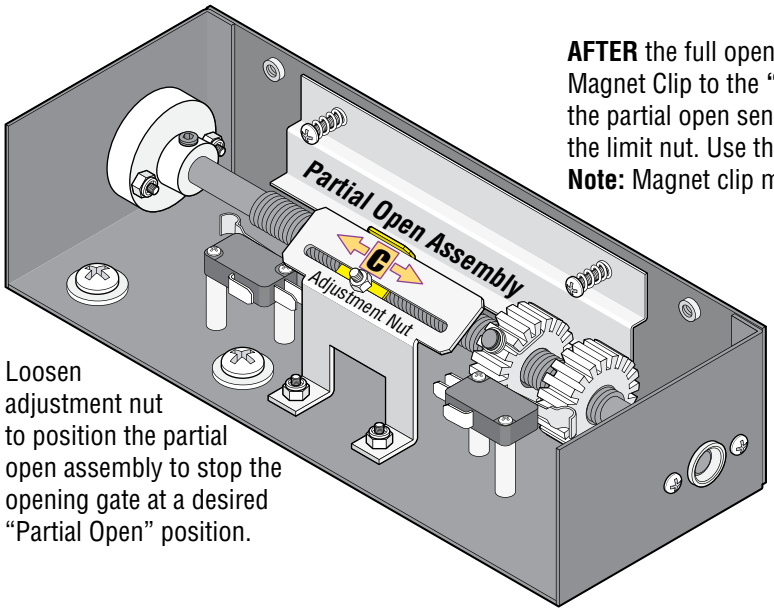

Loosen adjustment nut to position the partial open assembly to stop the opening gate at a desired "Partial Open" position.

Side View of Partial Open Assembly

Magnet MUST align with partial open sensor.

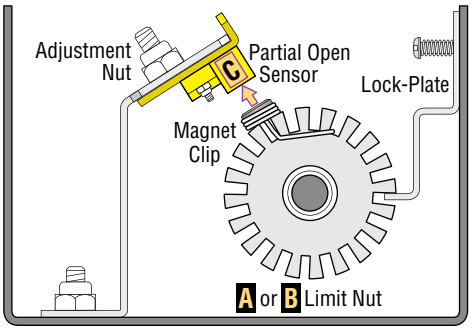

3.4 Inherent Reverse Sensors Adjustment

This vehicular gate operator is equipped with an inherent adjustable reversing sensor (Type A) used as the primary entrapment protection system according to UL 325 standards. **The gate will reverse direction after "physically" encountering an obstruction in either the opening or closing gate cycle**.

If the Auto-Close Timer (DIP-switch SW 1, switch 4) is ON and the gate physically encounters an obstruction during the **CLOSING** cycle, it will reverse to the open position and **HOLD** the gate at this position (Soft shutdown condition). Another input command is needed before the gate will reset and close again.

If the Partial Open Feature is being used and the gate physically encounters an obstruction during the **CLOSING** cycle, the gate will only reverse to the **FULL** open limit switch setting and **NOT** the partial open setting.

For the reverse system to function correctly, the gate must be properly installed and work freely in both directions and the limit switches must be properly adjusted before adjusting these sensors. The ideal adjustment will allow the operator to move the gate through its entire travel cycle without reversing, but will reverse upon contact with an obstruction with no more than 40 Lbs of force. **This force can be measured with a gate scale, P/N 2600-225.**

CAUTION: Keep pedestrians and vehicles clear of the gate while adjusting and testing sensors!

Note: "**Push to Operate**" button will use Auto-Close timer if turned ON.

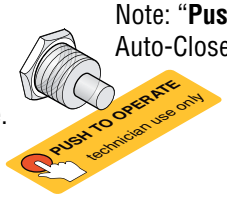

1. Press the "**Push to Operate**" button to **OPEN** the gate.

Note: The LED will turn on briefly when AC power is turned on.

2. While gate is opening, slowly rotate the primary reverse sensor clockwise until the LED lights up and the gate reverses direction. Rotate the primary reverse sensor back counter-clockwise approximately 1/8 turn to decrease the sensitivity (LED will turn off).

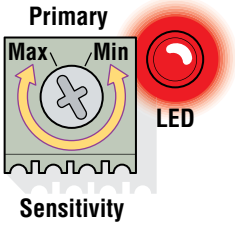

3. Press the "**Push to Operate**" button and **CLOSE** the gate. Make sure the gate closes completely. If it reverses and opens (LED will turn on), rotate the primary reverse sensor counter-clockwise a little more to decrease the reverse sensitivity (LED will turn off).
   Cycle the gate a few times to be sure that it cycles completely in both directions, adjusting the primary sensor as necessary.

Safety Note: The LED will remain ON after a cycling gate gets obstructed during normal operation to indicate that the reverse sensor has been tripped. Always check the gate area for possible obstructions before putting operator back in service.

Dual Operators:

Adjust reverse sensors for each operator when dual operators have been installed.

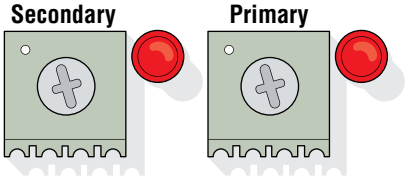

Note: If the minimum or maximum reverse sensor sensitivity adjustment is reached and the **Secondary Operator** will not reverse properly, the Secondary Operator Current Sensor's wire turns will have to be altered.
See 3.5 Secondary Current Sensor Adjustment on the next page.

Test the operator reversing sensitivity:

Place an immobile object along the gate path, allowing the gate to strike it while in the **open** and **close** cycles. The gate must reverse direction after striking the object. If it does not, increase the reverse sensitivity and repeat this testing until the correct sensitivity has been achieved in **BOTH** directions. The operator will assume a soft shutdown (Hold the auto-close timer) after striking and reversing the gate which will require pressing the "**Push to Operate**" button to cycle the operator again.

3.5 Secondary Current Sensor Adjustment (Dual Gates ONLY)

The **PRIMARY** gate operator's "secondary reversing sensor" uses a secondary current sensing device (Located only in the primary operator) to detect any obstructions "physically" encountered in the SECONDARY gate path when using dual gates.

The secondary current sensor uses a sensing coil with a given number of turns through it to monitor the current flow into the secondary operator. Each time the wire passes through the coil, it is considered a turn. The number of turns through the sensing coil is dependant on the operating voltage of the operator and the weight of the gate. In general, light weight gates may require additional turns of wire through the secondary current sensor, while heavier gates may require less turns. **CAUTION – HIGH VOLTAGE:** Be sure power is turned OFF before changing the number of wire turns to the secondary current sensor. When you are setting the secondary reverse sensor (section 3.4 on the previous page) and reach the **MAXIMUM sensitivity** position on the reverse sensor without activating the secondary operator reversing function, add an additional turn of wire through the secondary current sensor. If you set the secondary reverse sensor to the **MINIMUM sensitivity** position and the gate will not cycle completely, reduce the number of turns through the secondary current sensor.

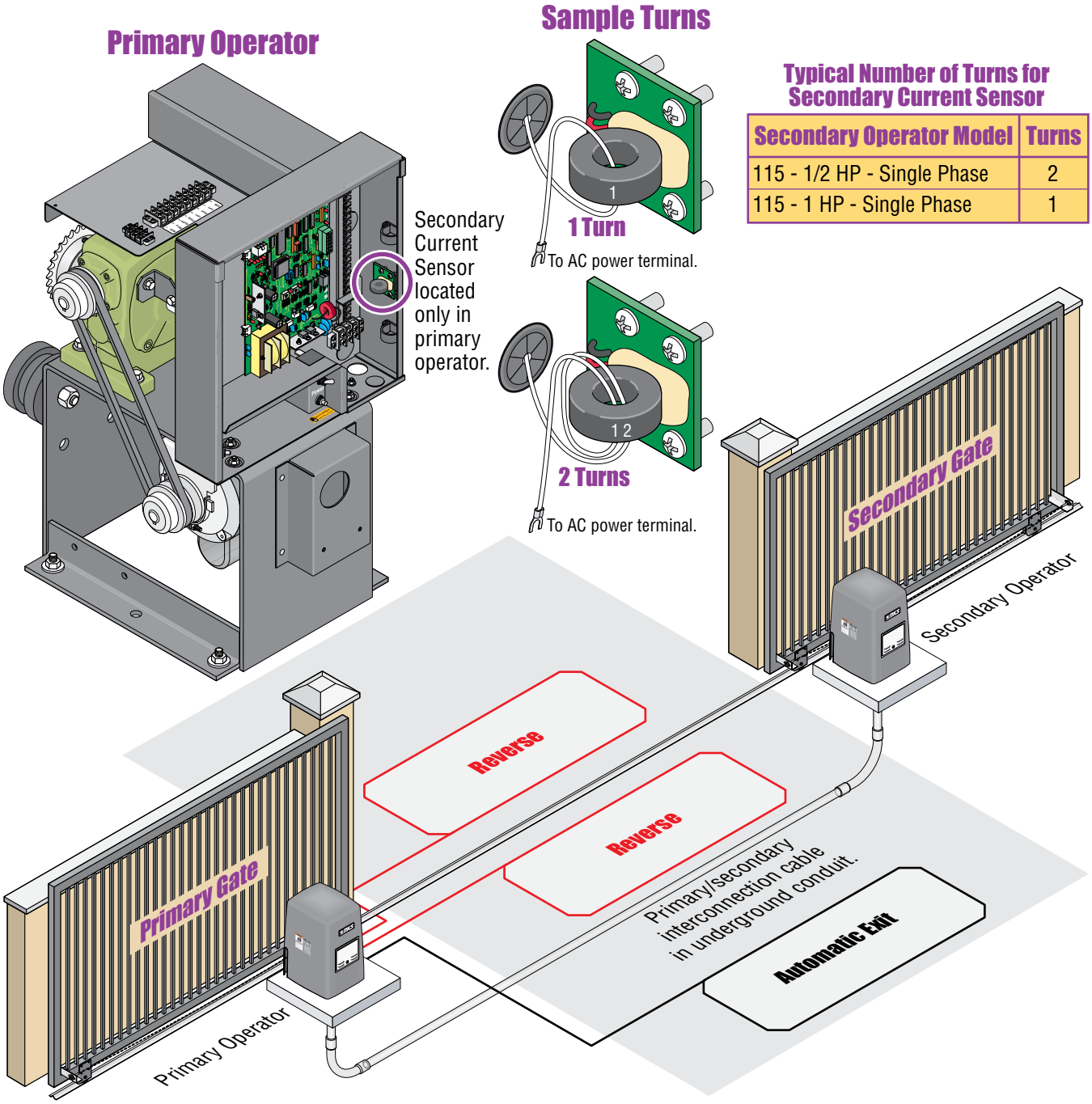

Typical Number of Turns for Secondary Current Sensor

Secondary Operator Model	Turns
115 - 1/2 HP - Single Phase	2
115 - 1 HP - Single Phase	1

SECTION 4 - ENTRAPMENT AND SAFETY PROTECTION

Secondary Entrapment Protection Devices:

In addition to the inherent reversing sensor system, the Model 9000 has a 6-pin UL 325 terminal for the connection of **photo sensors**-Type B1 and **reversing edges**-Type B2 secondary entrapment protection devices required by UL 325 standards. Entrapment protection devices **must be installed** to reduce the risk of injury. Install these devices where the risk of entrapment or obstruction exists while the gate is moving. The Model 9000 offers numerous options to meet your specific needs. The next 2 pages show wiring and typical positioning of the entrapment protection devices but specific installations will vary.

Note: Secondary entrapment protection devices will open the gate to the "Partial Open" setting when the opening device is connected to main terminal #5 (See page 32 for opening device wiring information).

4.1 UL 325 Terminal Description

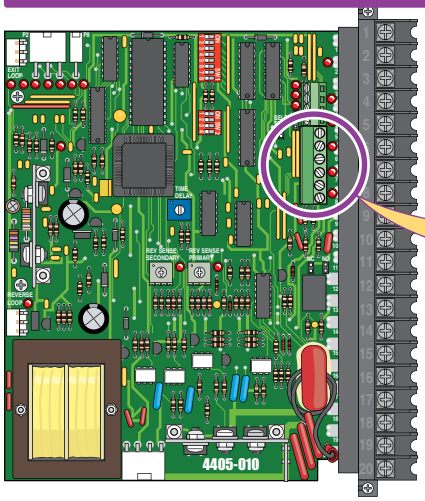

6-Pin UL 325 Terminal

Secondary Entrapment Protection Device Connection

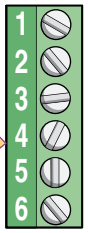

1 **OPEN Entrapment Sensor**
2 **CLOSE Entrapment Sensor**
3 **OPEN Contact Sensor**
4 **CLOSE Contact Sensor**
5 **Low Voltage Common**
6 **Low Voltage Common**

Note: The 6-pin terminal can be unplugged from circuit board for easy wire connections.

All inputs are normally open (NO).

115 VAC Convenience Outlets

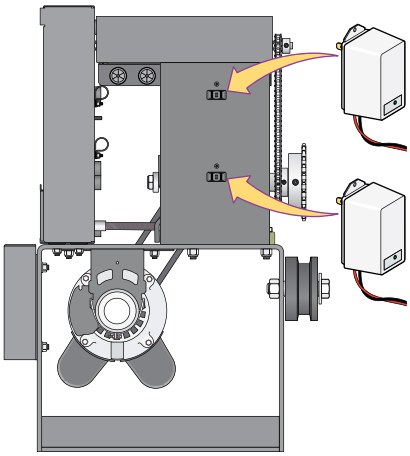

1 OPEN Entrapment Sensor (Photo Sensor): Obstructed opening-direction photo beam will stop the gate **during the opening-direction only.** Gate will resume the open cycle when the obstructed photo beam has been cleared.

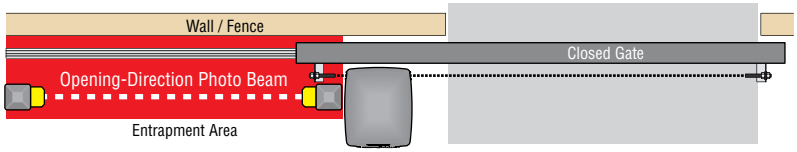

2 CLOSE Entrapment Sensor (Photo Sensor): Obstructed closing-direction photo beam will stop the gate **during the closing-direction only.** Gate will resume the close cycle when the obstructed photo beam has been cleared.

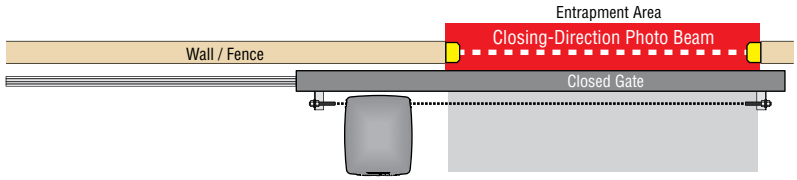

3 OPEN Contact Sensor (Reversing Edge(s)): Obstructed opening-direction reversing edge(s) will stop, then reverse the gate to the close position **during the opening-direction only.**

- After the gate reverses to the full close position, any opening input will cycle the gate again. Note: If the gate is opening by a time clock and an opening-direction reversing edge gets obstructed, the gate will return to the closed position and another input (automatic exit loop, reverse loop. etc.) is needed to cycle the gate open again.
- When the **opening-direction** reversing edge(s) gets obstructed and the gate is traveling back to the close position and the **closing-direction** reversing edge gets obstructed, the gate will **stop** and enter a soft shutdown condition (See page 34).

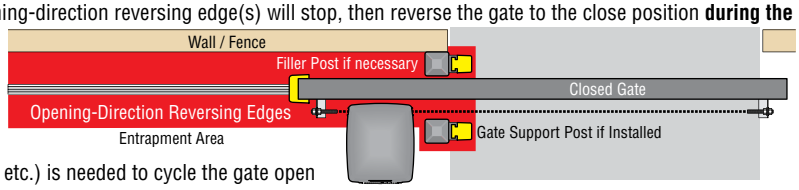

4 CLOSE Contact Sensor (Reversing Edge): Obstructed closing-direction reversing edge will stop, then reverse the gate to the open position, **during the closing-direction only.**

- After the gate reverses to the open position, the timer will automatically close the gate (if it is turned on). If the closing-direction reverse edge is activated a **second** time prior to the gate reaching the close position, the operator will **stop** and enter a soft shutdown condition (See page 34).
- When the **closing-direction** reversing edge gets obstructed and the gate is traveling back to the open position and the **opening-direction** revering edge gets obstructed, the gate will **stop** and enter a soft shutdown condition (See page 34).

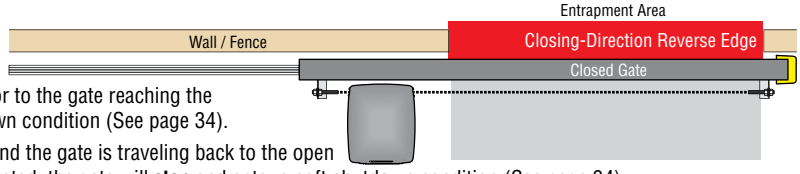

5 & 6 Low Voltage Common: Common terminals for all the secondary entrapment protection device inputs.

4.2 Secondary Entrapment Protection Device Locations

Typical UL Photo Sensor mounting height and distance away from gate.

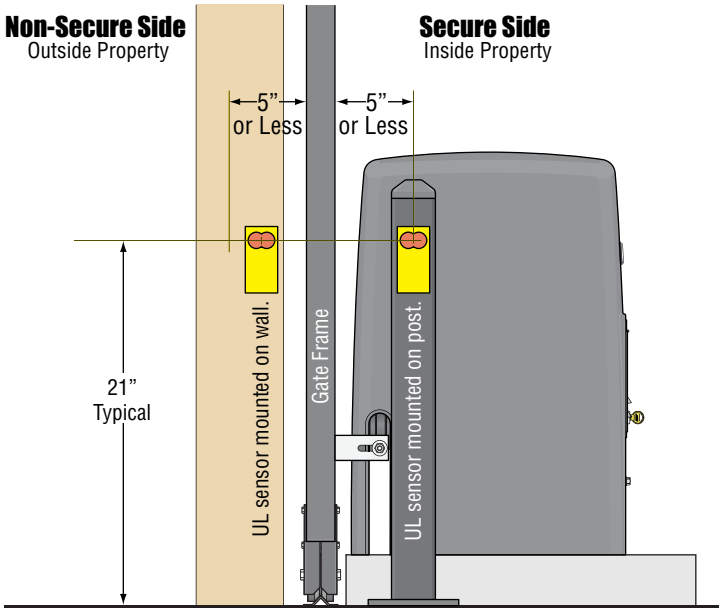

Photo sensors may be installed on either side of gate frame.

If the distance between the gate and wall is greater than 2 1/4”.

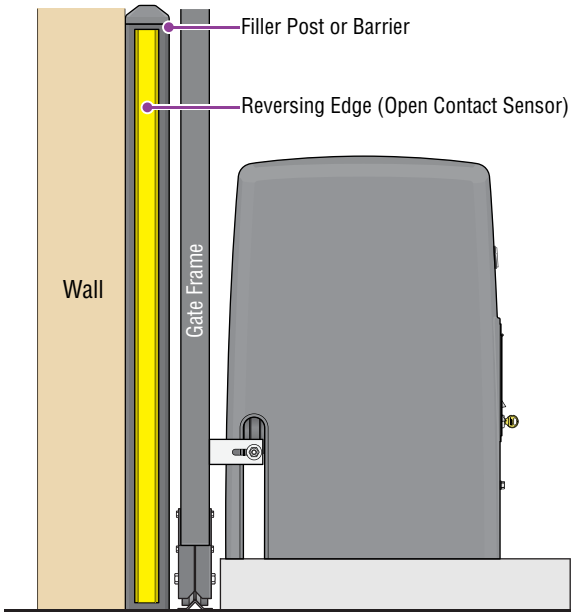

A filler post or barrier may need to be installed between the gate and wall area to reduce the distance to 2 1/4” **or less**. A reversing edge should be installed on the post or barrier for safety (See page 8 for more information).

Photo Sensors (With Filler Post and Reverse Edge) Sample Setup

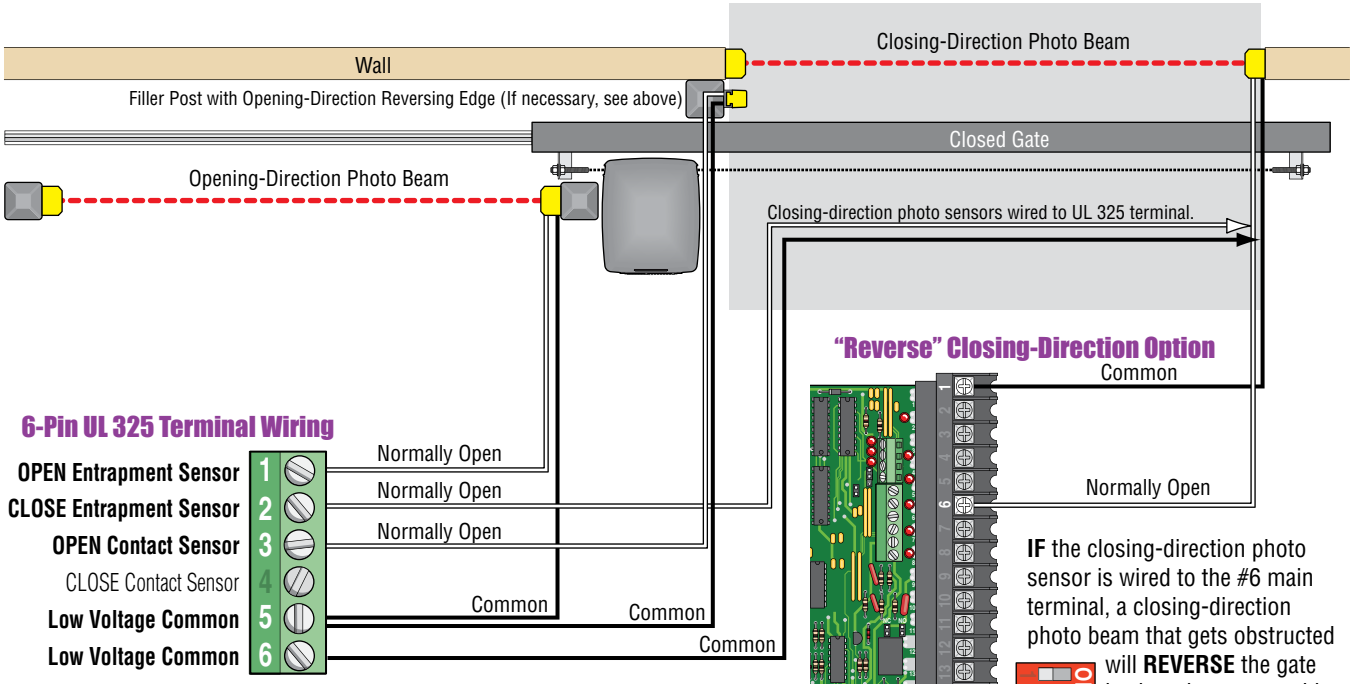

IF the closing-direction photo sensor is wired to the UL 325 terminal, a closing-direction photo beam that gets obstructed will **STOP** the gate, then resume closing the gate when the obstructed photo beam has been cleared.

Photo Sensor Power Note: Photo sensors can be powered by the built-in convenience outlets located on the operator (See previous page).

IF the closing-direction photo sensor is wired to the #6 main terminal, a closing-direction photo beam that gets obstructed will **REVERSE** the gate back to the open position.

SW 1, switch 5 **MUST** be **OFF**.

Wireless Reverse Edge Sample Setup - Single Receiver

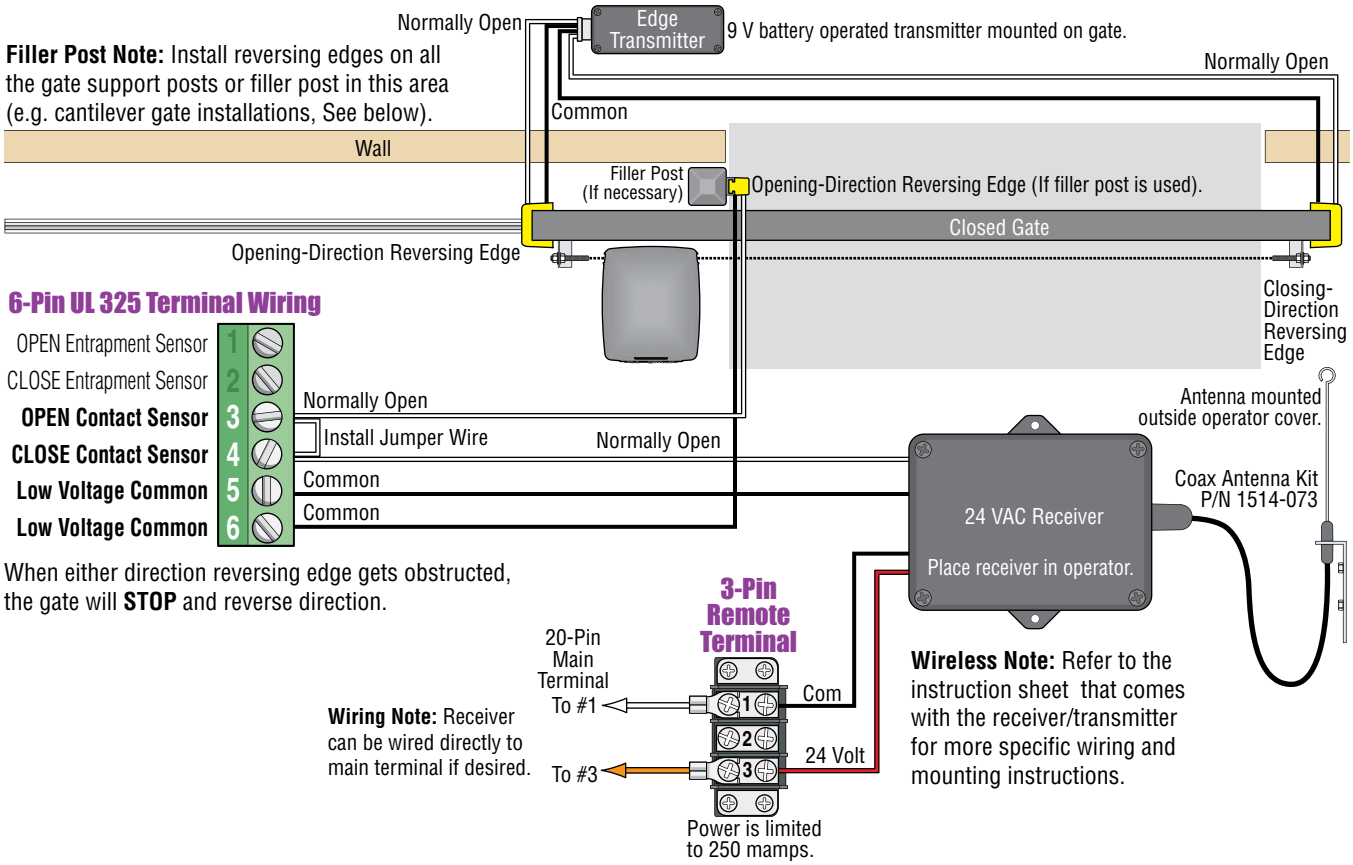

Filler Post Note: Install reversing edges on all the gate support posts or filler post in this area (e.g. cantilever gate installations, See below).

When either direction reversing edge gets obstructed, the gate will **STOP** and reverse direction.

Wiring Note: Receiver can be wired directly to main terminal if desired.

Wireless Note: Refer to the instruction sheet that comes with the receiver/transmitter for more specific wiring and mounting instructions.

Photo Sensor and Wireless Reverse Edge Sample Setup

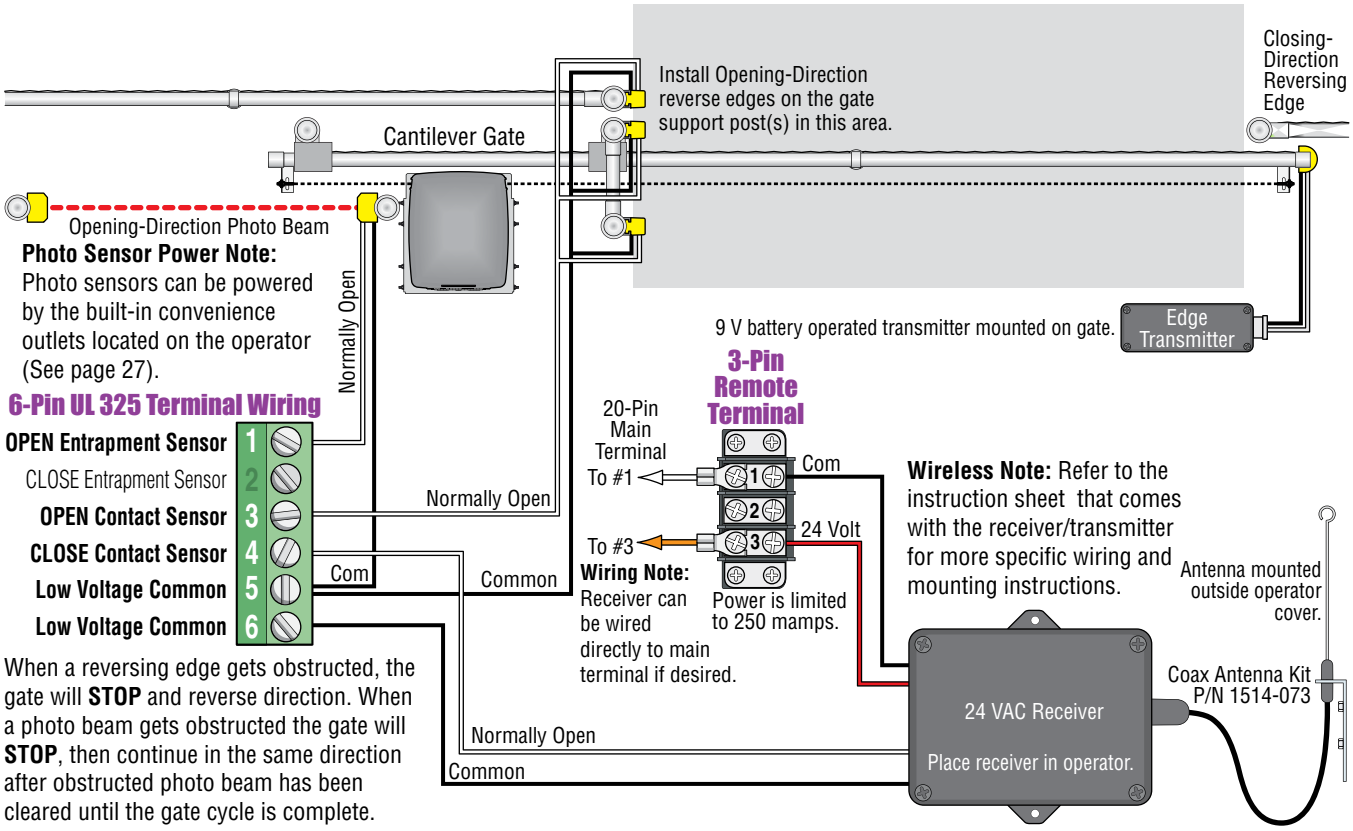

Photo Sensor Power Note: Photo sensors can be powered by the built-in convenience outlets located on the operator (See page 27).

When a reversing edge gets obstructed, the gate will **STOP** and reverse direction. When a photo beam gets obstructed the gate will **STOP**, then continue in the same direction after obstructed photo beam has been cleared until the gate cycle is complete.

Wireless Note: Refer to the instruction sheet that comes with the receiver/transmitter for more specific wiring and mounting instructions.

Wiring Note: Receiver can be wired directly to main terminal if desired.

4.3 Loop Detector Wiring

To help protect the operator from accidentally closing on vehicles in the gate's path, DoorKing highly recommends that loops and loop detectors be installed. Loops are laid underneath, cut into asphalt or concrete driveways or buried beneath gravel and earth driveways. A loop detection system will sense a vehicle like a metal detector and send a signal to the gate operator preventing the gate from automatically opening or closing on a vehicle when it is in the gate's path. DoorKing recommends that a licensed installer perform this work.

DoorKing offers a free "**Loop and Loop-Detectors Information Manual**" PDF located at DoorKing's web site for more information. www.dkaccess.com

Reverse Loops

Reverse loops are placed on each side of the gate to prevent the gate from closing on a vehicle in the gate's path. They will stop or reverse the cycling of the gate while a vehicle is in or near the gate's pathway.

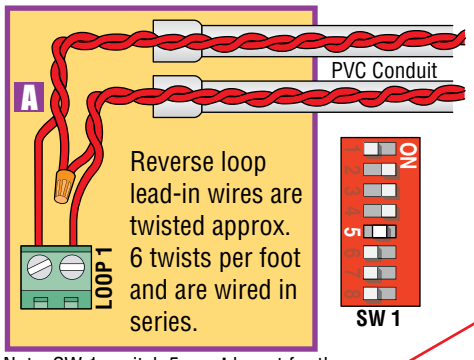

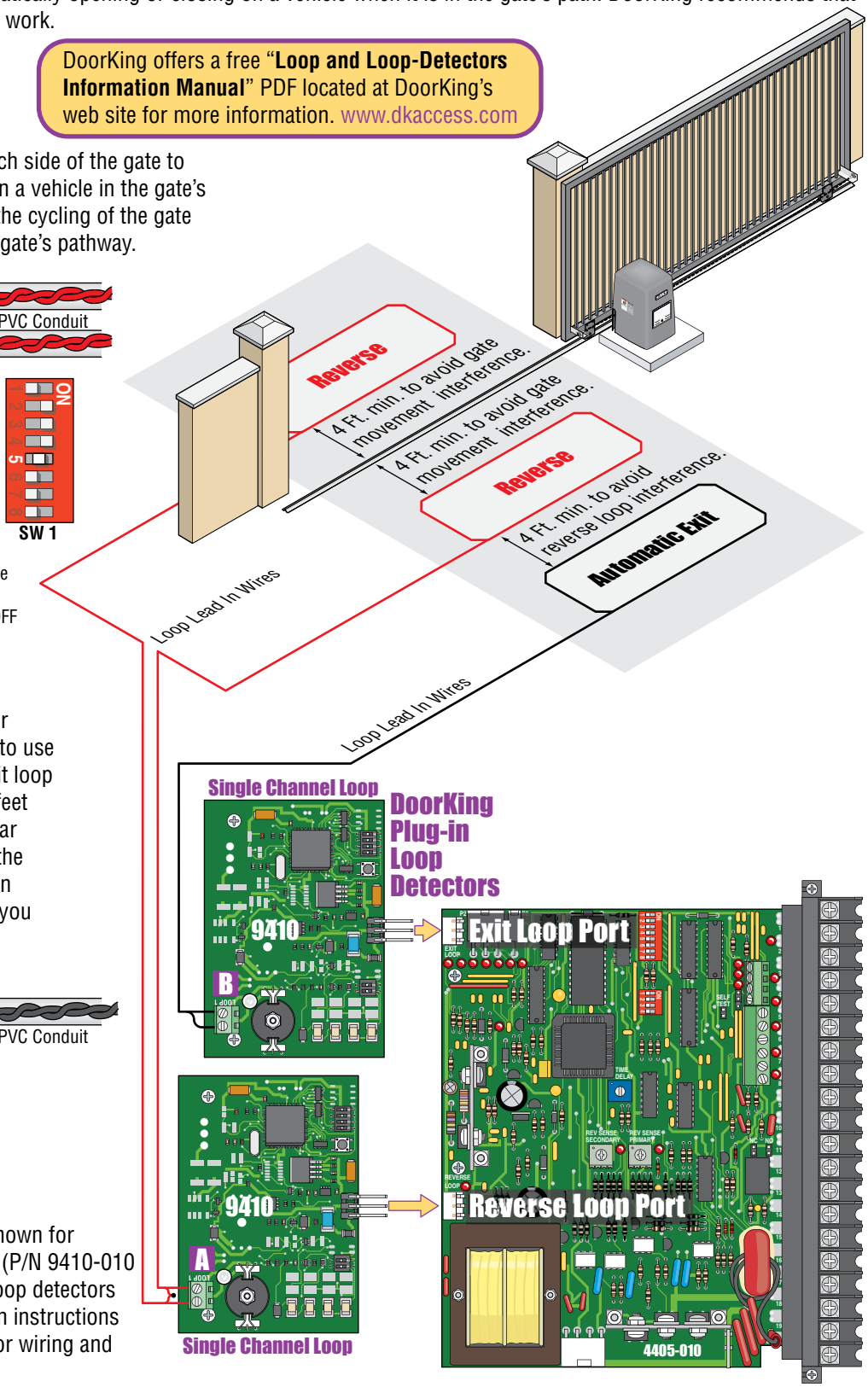

Note: SW 1, switch 5 **must** be set for the reverse loops. See page 23 for more information about SW 1, switch 5 ON/OFF options.

Automatic Exit Loop

Automatically opens the gate for exiting vehicles without having to use a transmitter or keypad. The exit loop can be placed a minimum of 4 feet away from the reverse loop or far enough away from the gate so the gate has started opening or even completely opened by the time you drive up to it (Free exit).

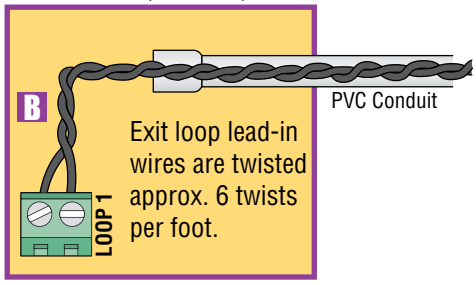

Note: Loop detector wiring is shown for DoorKing plug-in loop detector (P/N 9410-010 Single Channel). If third party loop detectors are used, refer to the installation instructions supplied with those detectors for wiring and separate power instructions.

SECTION 5 - MAIN TERMINAL WIRING

5.1 Terminal Descriptions

4-Pin Non-Removable Terminal

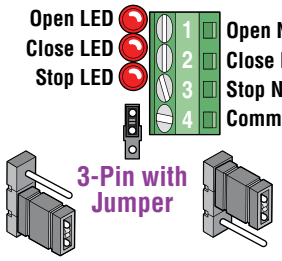

Jumper on **bottom** 2 pins when using 4-pin terminal.

Jumper on **top** 2 pins when **NOT** using 4-pin terminal.

Notes:

- Use a standard **4-wire** 3-button control station. DoorKing's **3-wire** 3-button control station **cannot** be used.
- When using a 3-button control station **AND** a interlock device together, #3 terminal (N.C.) must be wired in series.
- See next page for wiring.

20-Pin Main Terminal

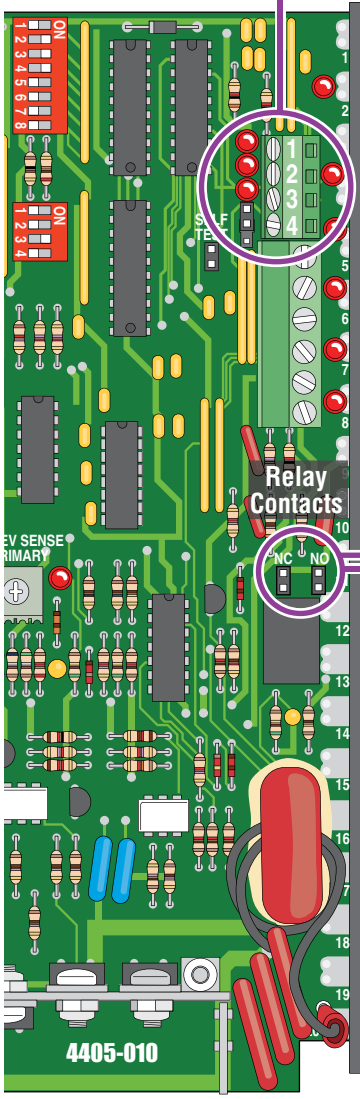

1	Low Voltage Common
2	Full Open
3	24 VAC - 250 mamp. max.
4	Full Open
5	Partial Open
6	Standard Reverse or Stop
7	Gate Tracker Data
8	Gate Tracker Busy
9	24 VDC Mag Lock Power
10	Dry Relay Contact
11	Dry Relay Contact
12	Low Voltage Common
13	Low Voltage Common
14	Entrapment Alarm
15	Alarm Reset
16	Secondary Current Sensor
17	Motor
18	Motor
19	Circuit Board Power
20	Circuit Board Power

DANGER
HIGH VOLTAGE!

4

- If SW 1, **switch 3** is **ON**, functions as a normal full open input (Normal setting).
- If SW 1, **switch 3** is **OFF**, input to terminal #4 becomes the output from the EXIT loop detector plugged into the EXIT loop port. (Used for specialized functions).

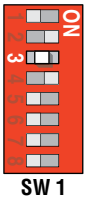

5

For long gate applications. An input device connected to terminal #5 will open the gate to the partial open setting, See page 24 for more information.

6

This input ONLY functions when gate is **fully opened** or in the **closing cycle**.

- When gate is closing: SW 1, **switch 5** is **OFF,** an input to terminal #6 (eg: photo beam gets obstructed) will **reverse** and open the gate. **Note:** If the auto-close timer is **ON**, when gate reaches the open position, timer **will not** close the gate. Another input command is needed to reset and close the gate.
- When gate is closing: SW 1, **switch 5** is **ON,** an input to terminal #6 (eg: photo beam gets obstructed) will **stop** the gate, then continue to close the gate when input is clear (Used to help prevent tailgating vehicles from unauthorized entry). See page 23 for more information.

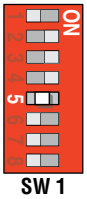

9

24-volt DC magnetic lock power is provided constantly except when the gate is **opening** or **open** (Normally Closed function). 1 Amp Max.

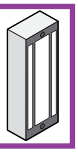

10 11

Operation of relay is dependent on setting of SW 1, **switches 7 and 8**. **Relay contacts** can be set for Normally Open (NO) or Normally Closed (NC) operation.

Contact rating is 1 amp maximum at 24-volts DC.

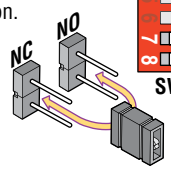

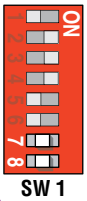

14 15

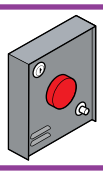

DoorKing's Remote alarm reset station can be connected. See next page for wiring. It MUST be mounted in the line-of-sight of the gate operator. (DKS P/N 1404-080)

16

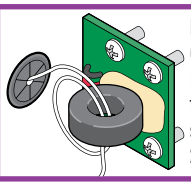

For dual operator applications ONLY. Allows the secondary reversing sensor to monitor the current flow into the secondary operator. See page 26 for more information.

5.2 Control Wiring

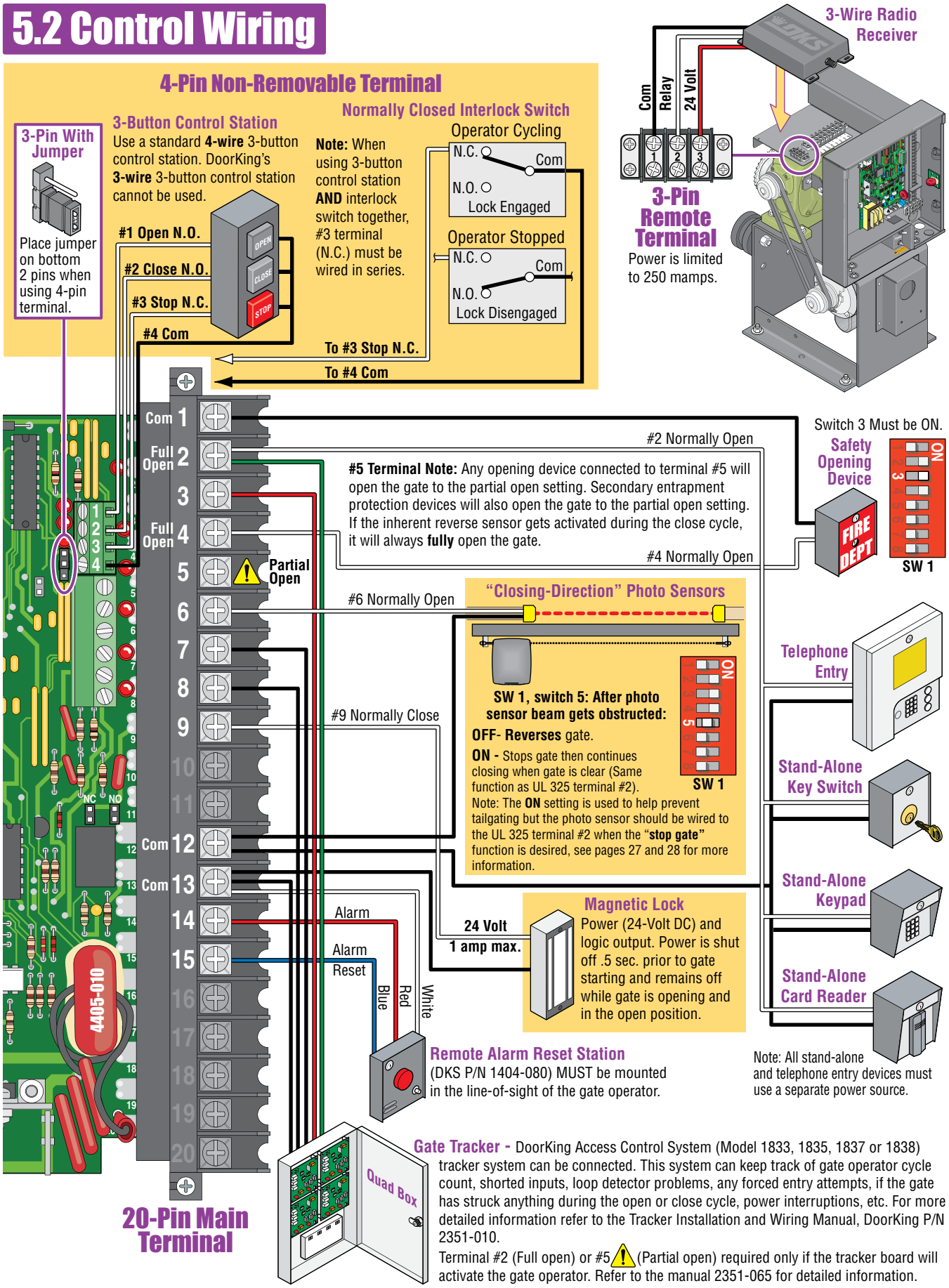

SECTION 6 - OPERATING INSTRUCTIONS

IMPORTANT SAFETY INSTRUCTIONS

WARNING - *To reduce the risk of injury or death:*

1. READ AND FOLLOW ALL INSTRUCTIONS.
2. Never let children operate or play with gate controls. Keep the remote control away from children.
3. Always keep people and objects away from gate. **NO ONE SHOULD CROSS THE PATH OF THE MOVING GATE**.
4. Test the operator monthly. The gate MUST reverse on contact with a rigid object or stop or reverse when an object activates the non-contact sensors. After adjusting the force or the limit of travel, retest the gate operator. Failure to adjust and retest the gate operator properly can increase the risk of injury or death.
5. Use the emergency release only when the gate is not moving and power has been shut-off.
6. KEEP GATES PROPERLY MAINTAINED. Read the owner's manual. Have a qualified service person make repairs to gate hardware.
7. The entrance is for vehicles only. Pedestrians must use separate entrance.
8. **SAVE THESE INSTRUCTIONS**.

6.1 Operator Controls and Resets

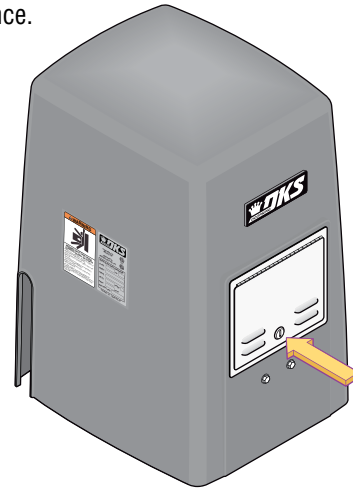

Unlock the control panel cover to access the controls.

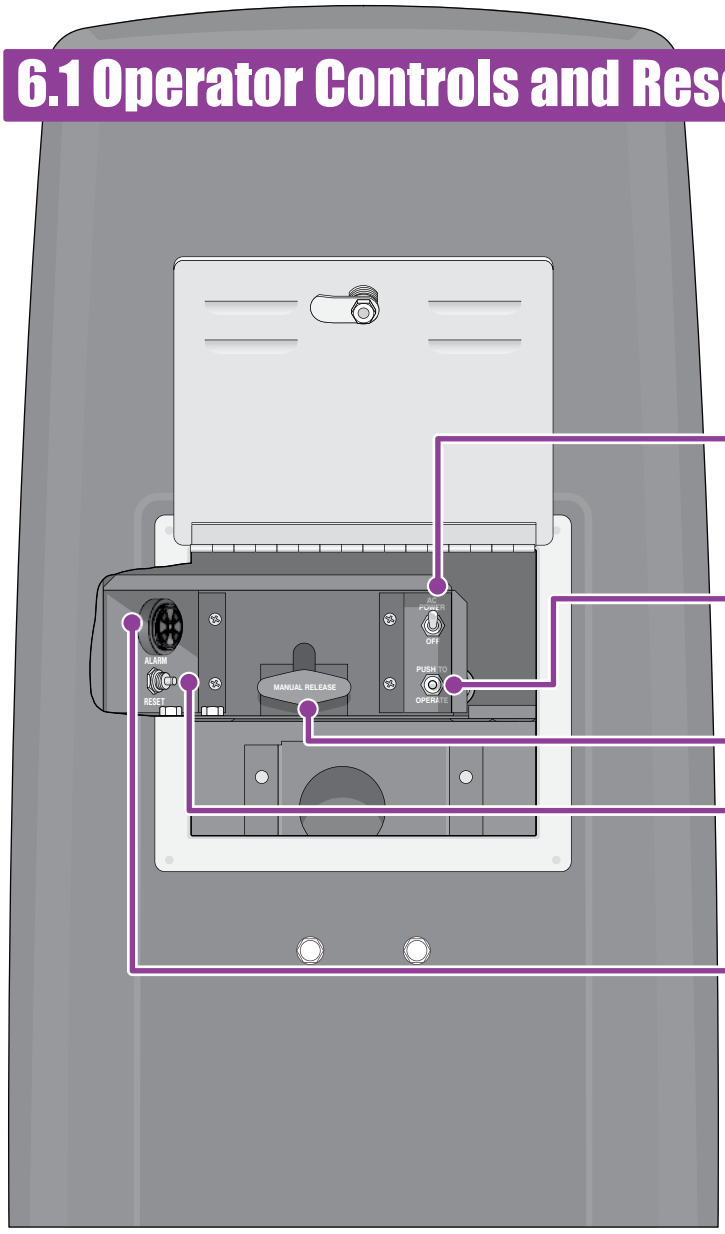

AC Power Switch - Powers the operator ON (toggle up) or OFF (toggle down).

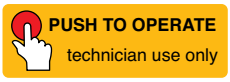

Push to Operate Button - Used to cycle the operator. It will use the auto-close timer when turned ON to close the gate. Opens gate fully.

Manual Release - See page 35.

Reset Button - Used to turn off the entrapment alarm and to reset the operator after a **HARD** shutdown has occurred.

Alarm Siren

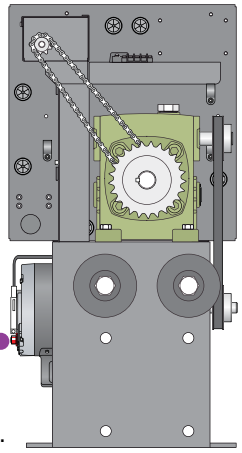

Motor Reset Button
Cover must be removed. Used to reset ONLY the "MOTOR" when weight overload or overheating occurs. Press firmly to reset.

6.2 Shutdown Conditions

Under various entrapment conditions the operator will assume either a **soft** or **hard (alarm)** shutdown. To determine what type of reset action is required, you will need to understand how the different entrapment conditions affect the gate operator.

Soft Shutdown (NO Alarm will Sound)

This occurs in various situations where the inherent or secondary entrapment protection devices have been activated. In a soft shutdown condition, the operator **will not** respond to any input that was present when the entrapment protection device sensed an obstruction. If the gate stops at the open position, the operator will not respond to the automatic close timer.

- **Example 1** - A time clock keys the gate open in the morning and an entrapment protection device senses an obstruction prior to the gate reaching the full open position. If the entrapment is sensed by the inherent system, the gate will reverse and run back to the closed position. The time clock input is still present, but the gate will not re-open.

Note: In some systems, the time clock input comes from the telephone entry system relay. This same relay may also provide open commands for a card reader, MicroPLUS transmitters and the visitor telephone entry. If so, these devices will also be disabled in a soft shutdown condition.

- **Example 2** - If the gate is closing and an entrapment protection device is activated, the gate will either stop or reverse and run back to the open position, depending upon if the secondary or inherent device was activated. The automatic close timer will not close the gate.
- **Example 3** - Vehicle arrives at exit loop and gate runs towards the open position. If the inherent entrapment protection gets activated during this opening cycle, the gate reverses and runs back to the closed position. After the inherent entrapment protection is cleared, If the vehicle is still present at the exit loop, a soft shutdown condition does not occur. The exit loop input provides an immediate reset of the operator and the gate will again run to the open position.

Resetting a Soft Shutdown

In some conditions, a soft shutdown will reset as soon as the entrapment condition clears. For example, if a non-contact sensor (photocell) is sensing an obstruction, the operator will stop the gate and assume a soft shutdown condition. When the photocell clears, the operator will return to normal operation.

When the operator is in a soft shutdown, activation of any “intended input” will reset the operator. An “ intended input” includes any command, any standard safety input and any loop input. Activating any of these inputs will reset the gate. At that point the gate will return to normal operation. If the gate is open, the automatic close timer will then time out and close the gate.

Hard Shutdown (Alarm Activated)

A hard shutdown condition occurs when: (1.) The inherent entrapment protection system (Type A) gets activated TWO consecutive times before the gate completes the open or close cycle. (2.) The reversing edge (Type B2) gets activated and reverses but before the gate completes the reverse cycle the inherent entrapment protection system (Type A) gets activated.

- **Example of a Hard Shutdown** - The gate is closing and the inherent entrapment protection system senses an obstruction and causes the gate to reverse direction. As the gate begins to run in the open direction, a second obstruction is sensed prior to the gate reaching the full open position. Once the second obstruction has been sensed, the operator will stop, **the audio alarm will sound and all standard inputs are shut down** (including open commands, safety commands, loop inputs, etc.).
  - **To silence the alarm**, press the reset button or after 5 minutes, the audio alarm will shut off but will “chirp” every 5 seconds. This indicates that the operator is in a hard shutdown condition (The reset button must be pressed to reset the operator and stop the alarm “chirping”).

Resetting a Hard Shutdown

The operator is in a hard shutdown condition when the audio alarm is sounding OR “chirping” every 5 seconds.

- Before resetting a hard shutdown, determine why the shutdown occurred. Inspect the gate for any obstructions along its path that could have activated the inherent entrapment sensing system. Inspect the gate and gate hardware.

The audio alarm will sound for five minutes, or until the operator’s reset button is pushed. After (5) five minutes the alarm will “chirp every 5 sec.” and the hard shutdown condition will remain in affect until the reset button is pushed.

Once the operator has been reset, an open or close command is needed to start the gate operator. Most activating commands will cause the gate operator to cycle to the open position. This includes activation of a key switch or open command and activation of an automatic exit loop. Activation of a close command will run the gate to the closed position.

Note: DoorKing operators have a built-in alarm reset push button mounted on the operator (See previous page for reset button location). Activating this button will return the gate operator to normal operation, but will not cycle the gate operator. A remote alarm/reset station (P/N 1404-080) can be mounted external of the gate operator provided that it is installed in the line-of-sight of the gate and gate operator.

6.3 Manual Gate Operation

Caution: Never attempt to manually operate any gate until you have verified that power to the operator has been shut-off.

1 Pull Manual Release Handle

Pull straight **OUT** as far as possible and then **UP**.

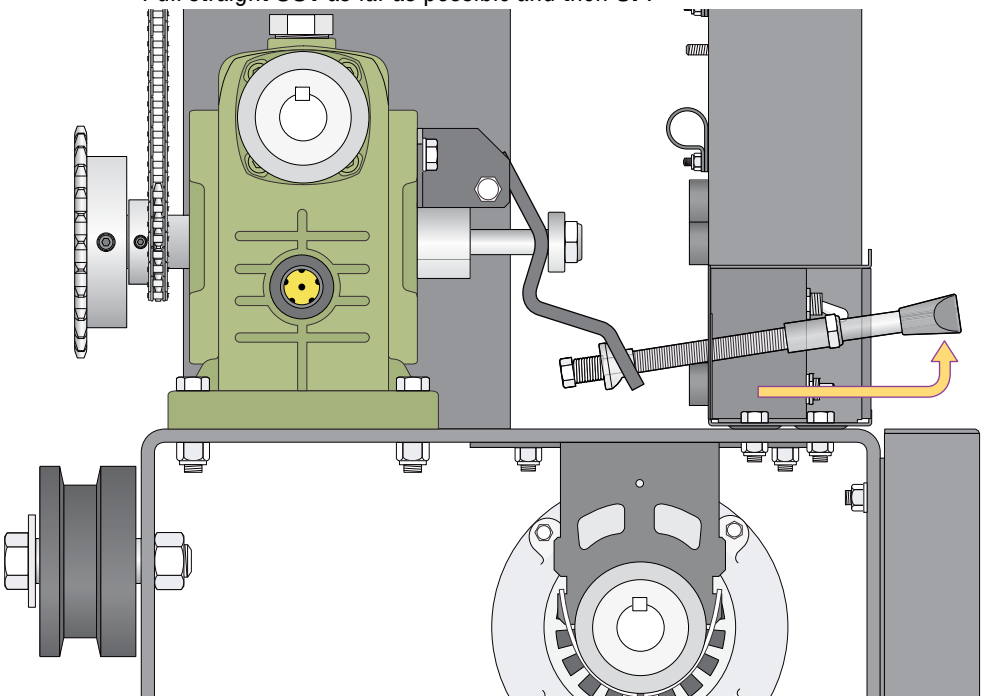

2 Release Handle

With handle in UP position, slide back down to lock it in manual release position.

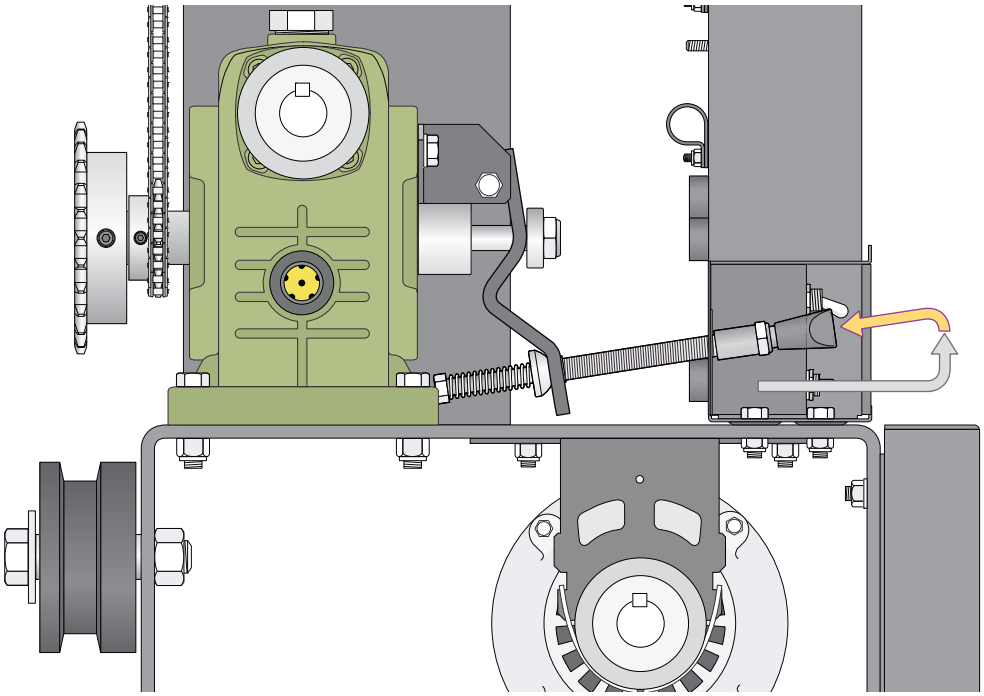

3 Manually Push Gate Open

SECTION 7 - MAINTENANCE AND TROUBLESHOOTING

Inspection and service of this gate operator by a qualified technician should be performed anytime a malfunction is observed or suspected. High cycle usage may require more frequent service checks.

7.1 Maintenance

When servicing the gate operator, always check any secondary (external) reversing devices (loops, photocells, etc.) for proper operation. If external reversing devices cannot be made operable, do not place this operator in service until the malfunction can be identified and corrected. **Always check the inherent reversing system when performing any maintenance. If the inherent reversing system cannot be made operable, remove this operator from service until the cause of the malfunction is identified and corrected. Keeping this operator in service when the inherent reversing system is malfunctioning creates a hazard for persons which can result in serious injury or death should they become entrapped in the gate.**

When servicing this gate operator, always turn power **OFF!! If gearbox requires oil, use only Mobil SHC-629 Synthetic Gear Oil. Do not completely fill gearbox with oil. Gearbox should be half full only. Do not exceed this level.**

Operator Component	Maintenance	Monthly Interval		
		3	6	12
Alarm	Activate the primary (inherent) reverse system by blocking the gate with a solid object. When the gate reverses, block the gate in the opposite direction prior to the limit being reached. The entrapment alarm should activate. Press the reset button to silence the alarm.	✓		
Drive Belt	Check for alignment, tightness and wear.		✓	
Chain	Check for sagging. Tighten if necessary.		✓	
Fire Dept.	Check emergency vehicle access device for proper operation.	✓		
Gate	Inspect for damage. Check gate wheels. rollers and guides for wear and grease if necessary.		✓	
Grease	Wheels, guide rollers and limit nuts if necessary.		✓	
Loop(s)	Check vehicular exit and reverse loops for proper operation.	✓		
Primary Reverse System	Check that the gate reverses on contact with an object in both the opening and closing cycles. Adjust the reversing sensor and/or clutch if necessary.	✓		
Pulleys	Check for alignment. Check setscrews.		✓	
Release	Check manual release for proper operation.	✓		
Secondary Reverse Device	Check secondary (external) reverse device(s) stop or reverse the gate when activated.	✓		
Complete System	Complete check of gate and gate operating system.			✓

7.2 Built-in Diagnostics

This gate operator is designed with built-in diagnostics that will alert you to potential or existing problems that the microprocessor has detected. Specific fault conditions are checked and the operator will signal that a fault exist through the built-in alarm.

Constant alarm is heard when power is applied: This indicates that the limit switch wire harness is not connected to the circuit board. In this condition, the operator will not run and the tone will continue until the fault is corrected. Check to be sure that the limit switch plugs are properly inserted into P2 and P8.

Constant alarm is heard: This indicates that the operator is in a hard shutdown condition. The alarm will continue to sound for five minutes, and then will "chirp" once every five seconds. The operator-reset button must be pressed or power must be removed and then reapplied to return the operator to normal operation.

Short "alarm chirp" is heard every five seconds: This indicates that the operator has been in a hard shutdown condition in excess of five minutes. This will continue until the operator-reset button is pressed or until power is removed from the operator.

Operator runs for 1 second and stops, two short "alarm chirps" are heard: This indicates that there may be a fault with the primary current sensor circuit. Check that the black current sensor wire has been passed through the hole in the primary current sensor donut on the circuit board with the correct number of loops (1/2 HP motor - 2 loops, 1 HP motor - 1 loop).

7.3 Troubleshooting

Have a good VOM meter with Min/ Max test button to check voltages and continuity. A Meg-Ohm meter capable of checking up to 500 meg-ohms of resistance is necessary to properly check the integrity of the ground loops. When a malfunction occurs, isolate the problem to one of three areas: 1) the operator, 2) the loop system, 3) the keying devices. **Use caution when checking high voltage areas: terminals 17 through 20, the motor capacitor and the motor.**

1. Check the input indicator LEDs. They should only come ON when a keying device (card reader, push button, etc.) is activated. If any of the input LEDs are ON continuously, this will cause the gate operator to hold open. Disconnect the keying devices one at a time until the LED goes OFF.

2. Check any external secondary entrapment protection devices. Any short or malfunction in these devices can cause the gate operator to stop or to hold open.

3. A malfunction in a loop or loop detector can cause the gate operator to hold open, or to not detect a vehicle when it is present over the loop. The LEDs next to the loop detector ports on the operator circuit board will light only when the loop has detected an object above it. If the LEDs stays on after the object has gone, then the loop detector has malfunctioned. Pull the loop detector circuit boards from the loop ports on the operator circuit board. If the malfunction persists, the problem is not with the loop system. For more information on trouble shooting loops and loop detectors, refer to your loop detector instruction sheet and to the DoorKing Loop and Loop Detector Information Manual.

4. Check to be sure that there are no shorted or open control wires from the keying devices to the gate operator. If a keying device fails to open the gate, momentarily jumper across terminals 1 and 2 (or 1 and 5) on the gate operator circuit board. If the gate operator starts, this indicates that a problem exist with the keying device and is not with the gate operator.

5. Check the high voltage supply. A voltage drop on the supply line (usually caused by using too small supply voltage wires) will cause the operator to malfunction. Refer to the wire size chart in section 2.1 page 19.

Symptom	Possible Solution(s)
Operator will not run. Power LED is OFF.	• Check that power to the operator is turned ON. • Transformer may be overheated. Turn power off and allow board to cool for several minutes then retest. Check for low 115 VAC power and low voltage shorts. • Check for 115 VAC at terminals 19 and 20. If voltage measures OK, check the terminal strip or replace the circuit board.
Operator will not run. Power LED is ON.	• Press motor reset button firmly. • Press "Push to Operate" button or momentarily jumper terminal 1 to terminal 2 (or 1 to 5). If the input LED does not come ON, check the terminal strip or replace the circuit board. If LED does come ON, proceed to next steps. • **Check Motor:** Gate must be half way open before testing motor. 1. **Turn AC power OFF** and remove circuit board. Wire terminal 19 to terminal 18 with a 14 AWG insulated jumper wire. Turn AC power **ON – CAUTION – HIGH VOLTAGE.** The motor should run, turn power **OFF**. 2. **With AC power still OFF**. Wire terminal 19 to terminal 17 with a 14 AWG insulated jumper wire. Turn AC power **ON – CAUTION – HIGH VOLTAGE.** The motor should run in the opposite direction as terminal 19 wired to 18, turn power **OFF**. 3. If the motor does not run, or runs in only one direction, problem can be a bad motor, motor capacitor, wire connections from the control board to the motor or a bad control board. If the motor runs in both steps above, contunue troubleshooting control board and accessories.

Symptom	Possible Solution(s)
Secondary operator motor will not run.	• Check that SW-1, switch 6 is ON. • Press secondary operator motor reset button firmly. • Remove circuit board. Momentarily jumper terminal 19 to the primary/secondary interconnection cable terminal 1, then to terminal 2 with a 14 AWG insulated jumper wire. **CAUTION – HIGH VOLTAGE.** The secondary motor should run one way, then the other way as power is applied to each terminal. • If the secondary motor runs in both directions, replace the control board. If secondary motor does not run, or runs in only one direction, problem can be in the wiring from the primary to secondary operator, bad secondary motor or motor capacitor.
Gate will not reverse when an obstruction is encountered.	• Check ERD (Reverse Sensor) setting.
Gate opens a short distance, then stops and reverses.	• Check the reversing sensitivity. • Disconnect the gate from the gate operator and check that the gate slides freely without and binding. Gate might be too heavy. • Continue troubleshooting.
Gate opens but will not close.	• Check the input LEDs. Any ON will hold the gate open and indicates a problem with a keying device. • Check the secondary safety devices. Any activated will hold the gate open and indicates a problem with the safety device. • Check the loop detectors. Any activated can hold the gate open and indicates a problem with the loop detector or ground loop. • Operator may be in a "soft shutdown." Activate any keying device to determine if operator returns to normal operation. • If automatic close is desired, be sure SW-1, switch 4 is ON. • Check motor as described on previous page.
Gate closes but will not open.	• Operator may be in a "soft shutdown." Check input LEDs. If any are ON, momentarily disconnect, then re-connect the wire going to the respective terminal. Operator should open. • Check to be sure that the operator is running in the proper direction. Turn power OFF, and then back ON. Activate a keying device. Operator should run in the open direction. If operator runs in the close direction, turn power OFF and change direction switch SW-1, switches 1 and/or 2. Go to above section if operator now opens but will not close. • Be sure that the respective LED on the control board lights when the keying device connected to the respective terminal is activated. If LED does not light, momentarily place a jumper wire from terminal 1 to the input terminal being checked. If LED lights and gate opens, problem is with the keying device. If LED does not light, replace control board. • Check motor as described on previous page.
Gate starts to close, then reverses to open.	• Check that the reverse sensitivity is properly adjusted. • Disconnect the gate from the operator and check that the gate operates freely without any binding. • Check the loop detector LEDs and input LEDs. Any that flash ON will cause the gate to reverse. • Check for proper loop wiring. A mis-wired loop detector will cause the gate to reverse. • Continue troubleshooting.
Gate closes and then re-opens.	• Check for any input or loop detector LEDs that are ON. • Check that the operator is running in the proper direction (see "gate closes but will not open" above).
Alarm sounds for 5 minutes and then chirps once every 5 seconds. Operator will not run.	• Operator is in a "hard shutdown" condition. Reset button must be pressed to return operator to normal operation.
Gate will not open when opening device connected to terminal #4 is operated.	• Safety device must be connected to main terminal #4. • Check that DIP-switch SW-1, switch 3 is ON. It must be on for the opening device to function.

7.4 Accessory Items

The following accessory items are available for the model 9000 slide gate operator.

Contact Sensors - For use as a secondary entrapment protection device. Miller Edge, Inc., MGO20, MGR20, MGS20
Photo Cell - Non-contact (photocell) sensors for use as a secondary entrapment protection device.
MMTC, Inc. Model IR55 - P/N 8080-010 MMTC, Inc. Model 60-278 - P/N 8080-011
Carlo Gavazzi Type PMP12 - P/N 8080-030 Carlo Gavazzi Type PMT - P/N 8080-031
Loop Detector - Detectors plug directly into ports on circuit board simplifying wiring.
Single channel detector - P/N 9410-010 Dual channel detector - P/N 9409-010
Loop Wire - 18 AWG loop wire with XLPE insulation is ideal for ground loops. Available in 500 and 1000 foot rolls. Red, blue or black insulation.
Pre-Fab Loops - Prefabricated ground loops. 24-foot circumference with 50-foot lead-in. Available in yellow, red or blue jackets. Not for use in asphalt roadways.
Loop Test Meter - Meg-ohm meter checks the integrity of ground loops. P/N 9401-045
Remote Alarm/Reset Station - Provides a remote station to reset an operator in a hard shutdown condition. Must be mounted in line-of-site of the gate and operator. Includes visual alarm light and audible siren. P/N 1404-080.
Interconnection Cable - Interconnect wire cable contains all the necessary wires to interconnect primary / secondary operators.
Cable length: 30 ft. - P/N 2600-755 40 ft. - P/N 2600-756 50 ft. - P/N 2600-757
Time Clock - 7 day and 365 day time clocks can be used to automatically open gate at pre-set time and days. Compact clock fits inside the operator. 7 day clock - P/N 2600-791 365 day clock - P/N 2600-795
High Voltage Kit - Alter the input AC voltage on a 115 VAC 9000 to 208, 230, 460 or 575 VAC. P/N 2600-266
115 VAC Heater with Fan Assembly Kit - Thermostatically controlled heater and fan for cold and hot environments. For 115 VAC input power ONLY. P/N 1601-154
208/230 VAC Heater with Fan Assembly Kit - Thermostatically controlled heater and fan for cold and hot environments. For 208/230 VAC input power ONLY. P/N 1601-197
460 VAC Heater with Fan Assembly Kit - Thermostatically controlled heater and fan for cold and hot environments. For 460 VAC input power ONLY. P/N 1601-198
V-Wheels - 4 inch and 6 inch. UHMW or Steel. Roller bearings or sleeve bearings. Single or tandem wheel configurations.
Endless Idler Assembly with Protective Cover - Use when gate operator chain needs 180° return. P/N 2600-818
Guide Rollers with Protective Covers - A variety of sizes to support slide gates.
Gate End Retainer - Fits on top of end post and helps stabilize the end of the gate in the open or closed position (End post NOT provided). P/N 1204-004
Post Mount Kit for 9000 - Required for post mount installation. P/N 9000-015.
Chain Tray Kit - 10 Ft. section. Sections connect together to fit any length gate. P/N 2601-270
Additional #40 Chain - 20 ft. per box. P/N 2600-442
Surge Devices - High and low voltage surge suppressors help prevent circuit board failure caused by lightning strikes and power surges. High Voltage - P/N 1876-010 Low Voltage - P/N 1878-010
Gate Scale - Use to test torque required to move gate. P/N 2600-225
Speed Bumps - Prefabricated six-foot speed bump reduces traffic speed through gate system. P/N 1610-150

1000 Inverter/Back-Up Power System - Power back-up and continuous operation when 115 VAC primary (AC) power has failed. **1000 Watt Model** (P/N 1000-080) can be used to power a single 1/2 HP gate operator system when operating continuously or used with two (2) 1/2 HP gate operator system when opening ONLY ONCE upon a power failure. The "Two battery option" extends the number of times the system can cycle with battery power but does not increase the HP or number of operators that can be used. **1500 Watt Model** (P/N 1000-081) can be used to power two (2) 1/2 HP gate operator system or a single 1 HP gate operator system when operating continuously. **Not available** for the 208/230/460/575 powered operators.
Mounting post kit for 1000 inverter cabinet (P/N 1000-045)

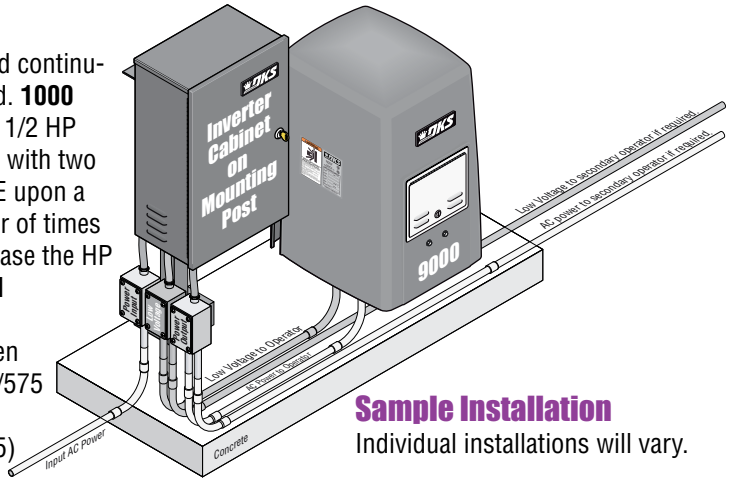

Sample Installation
Individual installations will vary.

Model 9000 1/2 HP or 1 HP 115 VAC Single Phase

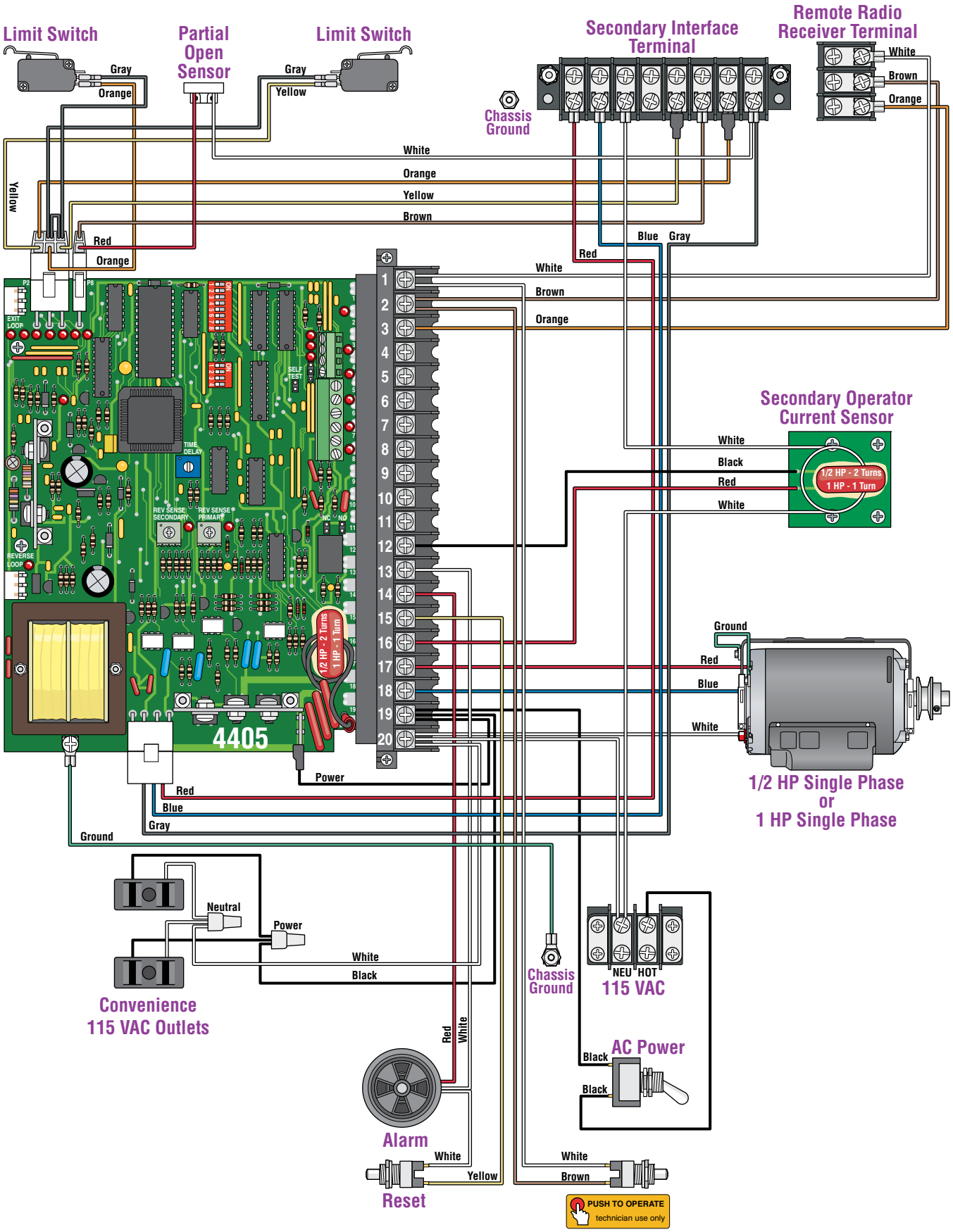

Installation/Owner's Manual

Series 9000

Vehicular Slide Gate Operator

Use this manual for circuit board 4405-010 Revision D or higher.

9000-065-L-12-12

DOORKING®, INC.

www.doorking.com

DoorKing, Inc.
120 Glasgow Avenue
Inglewood, California 90301
U.S.A.

Phone: 310-645-0023
Fax: 310-641-1586