DOORKING®, INC.

Owner's Manual

Series 6500

Vehicular Swing Gate Operator

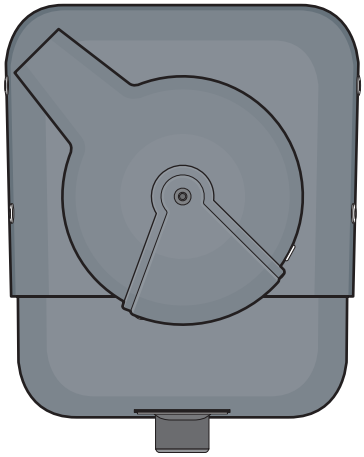

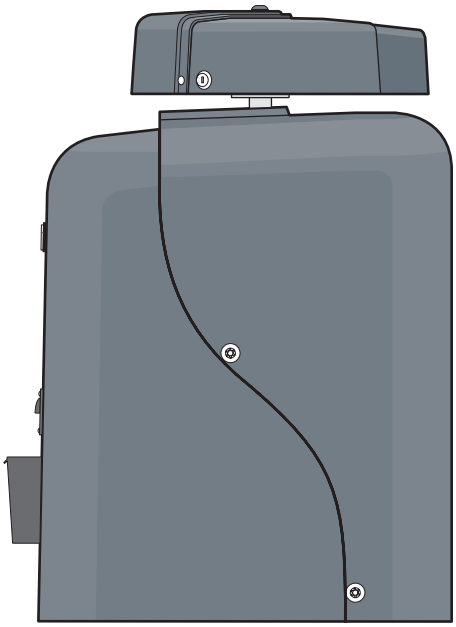

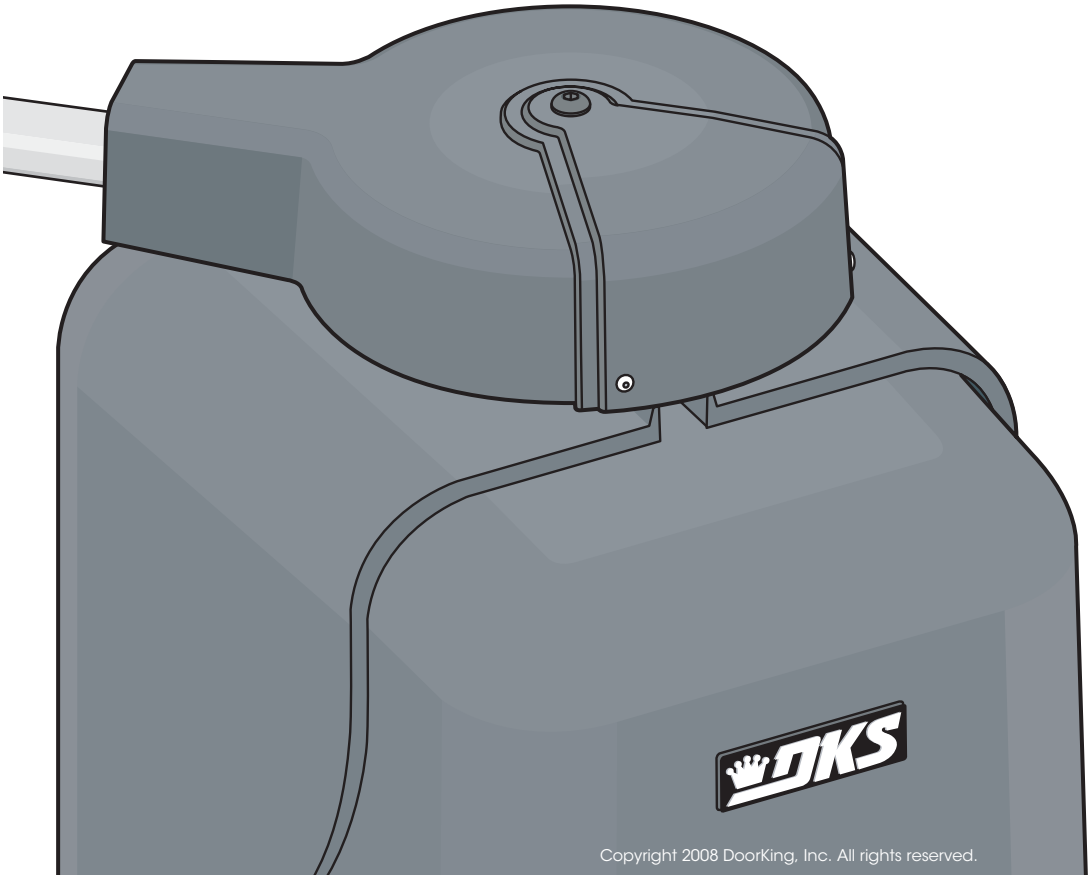

Copyright 2008 DoorKing, Inc. All rights reserved.

SPECIFICATIONS

Class of Operation	Model 6500 - UL325 Class I, II, III, IV
Type of Gate	Vehicular Swing Gates Only
Horsepower	1/2 or 1 HP
Voltage / Phase	115 VAC Single-Phase, 230 VAC Single-Phase, 460 VAC Single-Phase
Current	**½ HP –** 5.4 Amps @ 120V; 2.7 Amps @ 230V; 1.35 Amps @ 460V
	1 HP – 9.7 Amps @ 120V; 4.9 Amps @ 230V; 2.5 Amps @ 460V
Max Gate Weight	1/2 HP - 600 Lbs.; 1 HP - 800 Lbs.
Max Gate Length	1/2 HP - 18 Ft.; 1 HP - 22 Ft.
Cycles Per Hour	60 Per Hour
Speed	90° in approximately 12-14 seconds
Entrapment Protection	**Primary -** Inherent entrapment sensing system (Type A)
	Secondary - Provision for connection of a non-contact sensor (Type B1)

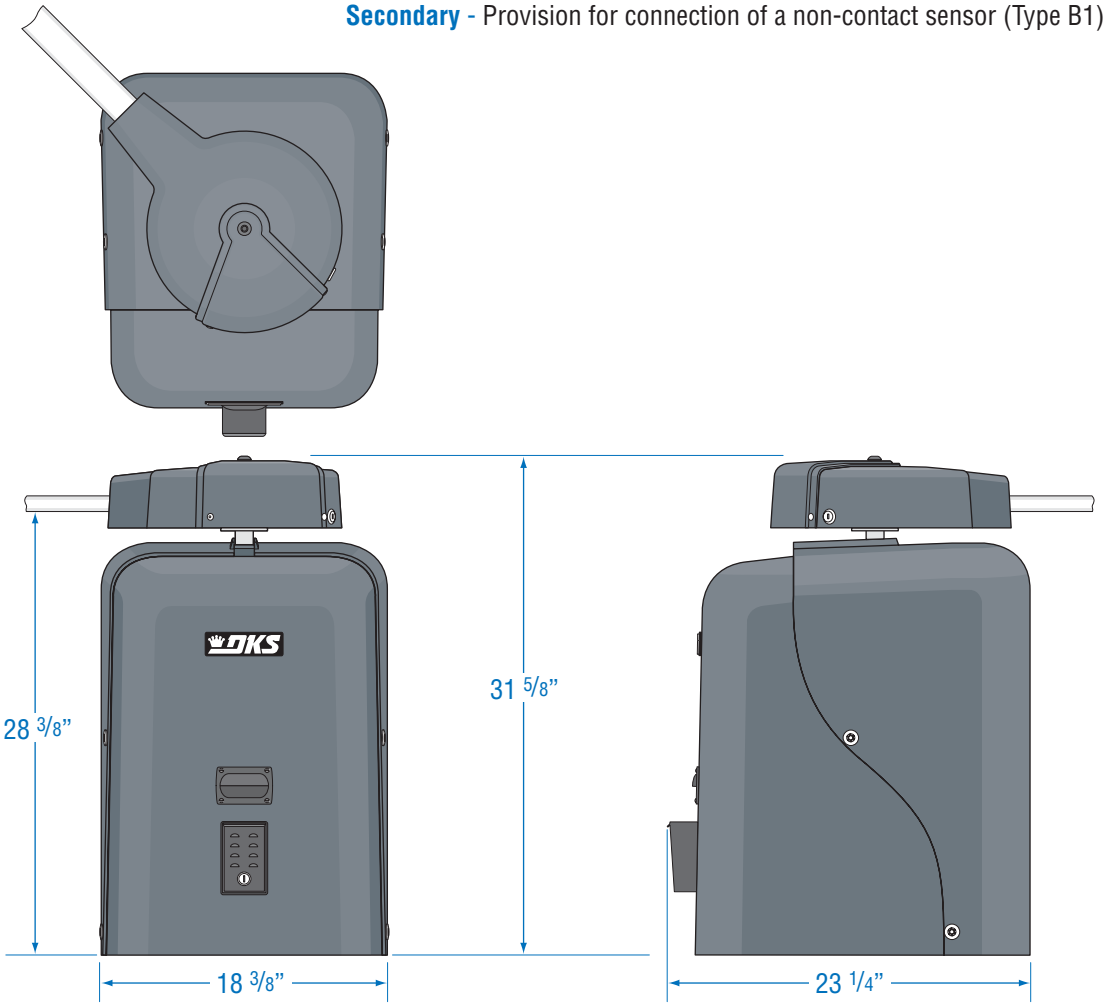

Use this manual with the following models only:
6500-080, 6500-081, 6500-082*, 6500-083*, 6500-084, 6500-085, 6500-086*, 6500-087*, 6500-088, 6500-089*, 6500-090, 6500-091*, 6500-092, 6500-093*, 6500-094, 6500-095*, 6500-096, 6500-097*, 6500-098, 6500-099*.

*Optional Convenience Open System

DoorKing, Inc. reserves the right to make changes in the products described in this manual without notice and without obligation of DoorKing, Inc. to notify any persons of any such revisions or changes. Additionally, DoorKing, Inc. makes no representations or warranties with respect to this manual. This manual is copyrighted, all rights reserved. No portion of this manual may be copied, reproduced, translated, or reduced to any electronic medium without prior written consent from DoorKing, Inc.

SPECIFICATIONS 1

Gate Construction 4
Important Safety Instructions 4
Instructions regarding intended installation: 4
Important Notices 5
UL325 Entrapment Protection 6
Glossary 7
Swing Gate Requirements 8
Swing Gate Protection 9

SECTION 1 - INSTALLATION 10

1.1 Samples of Standard Installation 10
1.2 Location of Gate Operator 10
1.3 Concrete Pad and Conduit Locations 11
1.4 Securing Operator to Pad 11
1.5 Attach Gate Bracket 12
1.6 Determining Arm Lengths 12
1.7 Installation of Warning Signs 13
1.8 Gates Opening Wider Than 90° 13

SECTION 2 - WIRING 14

2.1 Conduit Requirements 14
2.2 High Voltage Wire Runs 15
2.3 High Voltage Terminal Connections 15
2.4 Control Wiring 16
2.5 Loop Detector Wiring 17
2.6 Auxiliary Device Wiring 18
2.7 Primary / Secondary (Dual) Gate Connection 19

2.8 Main Terminal Description 20
2.9 Auxiliary Terminal Description 21
2.10 Secondary Operator Terminal Description 21

SECTION 3 - ADJUSTMENTS 22

3.1 Circuit Board Adjustments 22
3.2 DIP-Switch Settings 23
3.3 Limit Sensing System Adjustment 24
3.4 Inherent Entrapment Sensing Adjustment 24
3.5 Secondary Entrapment Protection System Connection 24

SECTION 4 - OPERATING INSTRUCTIONS 25

4.1 Power and Reset Switches 25
4.2 Shutdown Conditions 26-27
Soft Shutdown
Hard Shutdown
4.3 Manual Gate Operation 28
Emergency Vehicle Access Conditions
Manual Release

SECTION 5 - OPTIONAL CONVENIENCE OPEN ADJUSTMENTS 29

5.1 Operating Mode 29
5.2 DC System Description 30
5.3 DIP-Switch Settings 30

SECTION 6 - MAINTENANCE AND TROUBLESHOOTING 31

6.1 Maintenance 31
6.2 Troubleshooting 32-33
6.3 Built-in Diagnostics 34
6.4 Accessory Items 34
Model 6500's Wiring Diagrams 35-44

Gate Construction

Vehicular gates should be constructed and installed in accordance with ASTM F2200; Standard Specification for Automated Vehicular Gate Construction. For a copy of this standard, contact ASTM directly at 610-832-9585; service@astm.org; or www.astm.org.

Important Safety Instructions

WARNING - To reduce the risk of injury or death:

1. READ AND FOLLOW ALL INSTRUCTIONS.
2. Never let children operate or play with gate controls. Keep the remote control away from children.
3. Always keep people and objects away from gate. **NO ONE SHOULD CROSS THE PATH OF THE MOVING GATE.**
4. Test the operator monthly. The gate MUST reverse on contact with a rigid object or stop or reverse when an object activates the non-contact sensors. After adjusting the force or the limit of travel, retest the gate operator. Failure to adjust and retest the gate operator properly can increase the risk of injury or death.
5. Use the emergency release only when the gate is not moving.
6. KEEP GATES PROPERLY MAINTAINED. Read the owner's manual. Have a qualified service person make repairs to gate hardware.
7. The entrance is for vehicles only. Pedestrians must use separate entrance.
8. **SAVE THESE INSTRUCTIONS!**

Instructions regarding intended installation:

- Install the gate operator only if:
  1. The operator is appropriate for the construction of the gate and the usage class of the gate.
  2. All openings of a horizontal slide gate are guarded or screened from the bottom of the gate to a minimum of 4 feet (1.22 m) above the ground to prevent a 2 ¼ inch (57.2 mm) diameter sphere from passing through the openings anywhere in the gate, and in that portion of the adjacent fence that the gate covers in the open position.
  3. All exposed pinch points are eliminated or guarded.
  4. Guarding is supplied for exposed rollers.
- The operator is intended for installation only on gates used for vehicles. Pedestrians must be supplied with a separate access opening. The pedestrian access opening shall be designed to promote pedestrian usage. Locate the gate such that persons will not come in contact with the vehicular gate during the entire path of travel of the vehicular gate.
- The gate must be installed in a location so that enough clearance is supplied between the gate and adjacent structures when opening and closing to reduce the risk of entrapment. Swinging gates should not open into public access areas.
- The gate must be properly installed and work freely in both directions prior to the installation of the gate operator. Do not over-tighten the operator clutch, pressure relief valve or reduce reversing sensitivity to compensate for a damaged gate.
- For gate operators utilizing Type D protection:
  1. The gate operator controls must be placed so that the user has full view of the gate area when the gate is moving.
  2. A warning placard shall be placed adjacent to the controls.
  3. An automatic closing device (such as a timer, loop sensor, or similar device) shall not be employed.
  4. No other activation device shall be connected.
- Controls intended for user activation must be located at least ten feet (10') away from any moving part of the gate and where the user is prevented from reaching over, under, around or through the gate to operate the controls. Outdoor or easily accessible controls should have a security feature to prevent unauthorized use.
- The Stop and/or Reset button must be located in the line-of-sight of the gate. Activation of the reset control shall not cause the operator to start.
- A minimum of two (2) WARNING SIGNS shall be installed, one on each side of the gate where easily visible.
- For gate operators utilizing a non-contact sensor:
  1. See the instructions on the placement of non-contact sensors for each type of application.
  2. Care shall be exercised to reduce the risk of nuisance tripping, such as when a vehicle trips the sensor while the gate is still moving in the opening direction.
  3. One or more non-contact sensors shall be located where the risk of entrapment or obstruction exist, such as the perimeter reachable by a moving gate or barrier.

- For gate operators utilizing contact sensors:
  1. One or more contact sensors shall be located where the risk of entrapment or obstruction exist, such as at the leading edge, trailing edge, and post mounted both inside and outside of a vehicular horizontal slide gate.
  2. One or more contact sensors shall be located at the bottom edge of a vehicular vertical lift gate.
  3. One or more contact sensors shall be located at the pinch point of a vehicular vertical pivot gate.
  4. A hardwired contact sensor shall be located and its wiring arranged so that the communication between the sensor and the gate operator is not subjected to mechanical damage.
  5. A wireless contact sensor such as one that transmits radio frequency (RF) signals to the gate operator for entrapment protection functions shall be located where the transmission of the signals are not obstructed or impeded by building structures, natural landscaping or similar obstructions. A wireless contact sensor shall function under the intended end-use conditions.
  6. One or more contact sensors shall be located at the bottom edge of a vertical barrier (arm).

Important Notices

Vehicular gate operator products provide convenience and security. However, gate operators must use high levels of force to move gates and most people underestimate the power of these systems and do not realize the potential hazards associated with an incorrectly designed or installed system. These hazards may include:

- Pinch points
- Entrapment areas
- Reach through hazards
- Absence of entrapment protection devices
- Improperly located access controls
- Absence of vehicle protection devices
- Absence of controlled pedestrian access

In addition to these potential hazards, automated vehicular gate systems must be installed in accordance with the UL-325 Safety Standard and the ASTM F2200 Construction Standard. Most lay persons are unaware of, or are not familiar with, these standards. If an automated vehicular gate system is not properly designed, installed, used and maintained, serious injuries or death can result. Be sure that the installer has instructed you on the proper operation of the gate and gate operator system.

Be sure that the installer has trained you about the basic functions of the required reversing systems associated with your gate operating system and how to test them. These include reversing loops, inherent reversing system, electric edges, photoelectric cells, or other external devices.

- This Owner's Manual is your property. Keep it in a safe place for future reference.
- Be sure that all access control devices are installed a minimum distance of 10 feet away from the gate and gate operator, or in such a way that a person cannot touch the gate or gate operator while using the device. If access control devices are installed in violation of these restrictions, immediately remove the gate operator from service and contact your installing dealer.
- Loops and loop detectors, photo-cells or other equivalent devices must be installed to prevent the gate from closing on vehicular traffic.
- The speed limit for vehicular traffic through the gate area is 5 MPH. Install speed bumps and signs to keep vehicular traffic from speeding through the gate area. Failure to adhere to posted speed limits can result in damage to the gate, gate operator, and to the vehicle.
- Be sure that all persons who will use the gate system are familiar with the proper use of the gate and gate operator and are familiar with the possible hazards associated with the gate system.
- Be sure that warning signs are permanently installed on both sides of the gate in an area where they are fully visible to traffic.
- It is your responsibility to periodically check all entrapment protection devices. If any of these devices are observed to function improperly, remove the operator from service immediately and contact your installing or servicing dealer.
- Follow the recommended maintenance schedule.
- Do not allow children to play in the area of the operator or to play with any gate-operating device.
- To remove the gate operator from service, operate the gate to the full open position and then shut off power to the operator at the service panel.

UL325 Entrapment Protection

Class I

A vehicular gate operator (or system) intended for use in a home of one-to four single family dwelling, or a garage or parking area associated therewith.

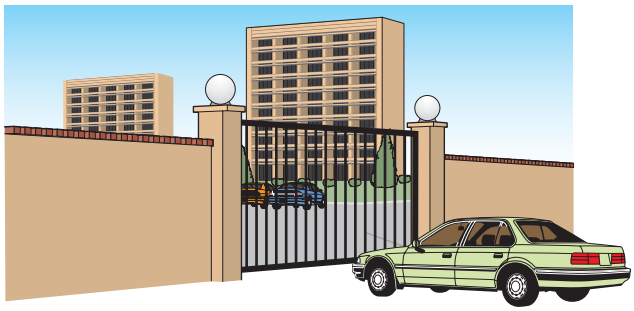

Class II

A vehicular gate operator (or system) intended for use in a commercial location or building such as a multi-family housing unit (five or more single family units) hotel, garages, retail store or other building servicing the general public.

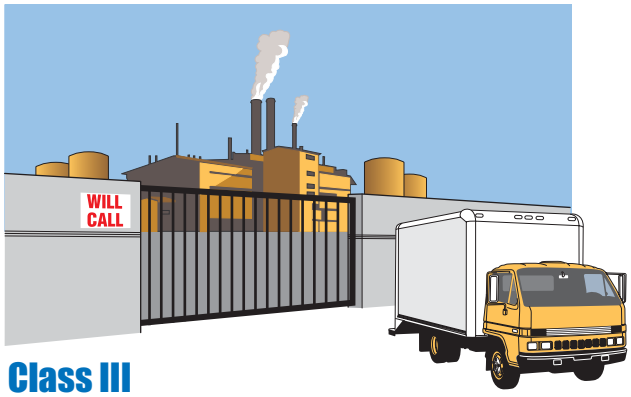

Class III

A vehicular gate operator (or system) intended for use in a industrial location or building such as a factory or loading dock area or other locations not intended to service the general public.

Class IV

A vehicular gate operator (or system) intended for use in a guarded industrial location or building such as an airport security area or other restricted access locations not servicing the general public, in which unauthorized access is prevented via supervision by security personnel.

This table illustrates the entrapment protection requirements for each of the four UL325 classes.

UL325 Classifications	Horizontal Slide, Vertical Lift, Vertical Pivot		Swing and Vertical Barrier (arm)	
	Primary Protection	Secondary Protection	**Primary Protection**	Secondary Protection
Class I and II	**A**	B1, B2 or D	**A or C**	A, B1, B2, C or D
Class III	**A, B1 or B2**	A, B1, B2, D or E	**A, B1, B2 or C**	A, B1, B2, C or D
Class IV	**A, B1, B2 or D**	A, B1, B2, D or E	**A, B1, B2, C or D**	A, B1, B2, C, D or E

A - Inherent entrapment protection system.
B1 - Provision for connection of, or supplied with, a non-contact sensor (photoelectric sensor or the equivalent). When used as the PRIMARY device, must be monitored.
B2 - Provision for connection of, or supplied with, a contact sensor (edge device or the equivalent). When used as the PRIMARY device, must be monitored.
C - Inherent adjustable clutch or pressure relief device.
D - Provision for connection of, or supplied with, an actuating device requiring continuous pressure to maintain opening or closing motion of the gate.
E - An inherent audio alarm.

Glossary

GATE - A moving barrier such as a swinging, sliding, raising, lowering, or the like, barrier, that is a stand-alone passage barrier or is that portion of a wall or fence system that controls entrance and/or egress by persons or vehicles and completes the perimeter of a defined area.

RESIDENTIAL VEHICULAR GATE OPERATOR – CLASS I - A vehicular gate operator (or system) intended for use in a home of one-to four single family dwelling, or garage or parking area associated therewith.

COMMERCIAL / GENERAL ACCESS VEHICULAR GATE OPERATOR - CLASS II - A vehicular gate operator (or system) intended for use in a commercial location or building such as a multi-family housing unit (five or more single family units), hotels, garages, retail store, or other building servicing the general public.

INDUSTRIAL / LIMITED ACCESS VEHICULAR GATE OPERATOR - CLASS III - A vehicular gate operator (or system) intended for use in an industrial location or building such as a factory or loading dock area or other locations not intended to service the general public.

RESTRICTED ACCESS VEHICULAR GATE OPERATOR - CLASS IV - A vehicular gate operator (or system) intended for use in a guarded industrial location or building such as an airport security area or other restricted access locations not servicing the general public, in which unauthorized access is prevented via supervision by security personnel.

VEHICULAR BARRIER (ARM) OPERATOR (OR SYSTEM) - An operator (or system) that controls a cantilever type device (or system), consisting of a mechanical arm or barrier that moves in a vertical arc, intended for vehicular traffic flow at entrances or exits to areas such as parking garages, lots or toll areas.

VEHICULAR HORIZONTAL SLIDE-GATE OPERATOR (OR SYSTEM) - A vehicular gate operator (or system) that controls a gate which slides in a horizontal direction that is intended for use for vehicular entrance and exit to a drive, parking lot, or the like.

VEHICULAR SWING-GATE OPERATOR (OR SYSTEM) - A vehicular gate operator (or system) that controls a gate which moves in an arc in a horizontal plane that is intended for use for vehicular entrance and exit to a drive, parking lot, or the like.

SYSTEM - In the context of these requirements, a system refers to a group of interacting devices intended to perform a common function.

WIRED CONTROL - A control implemented in a form of fixed physical interconnections between the control, the associated devices, and an operator to perform predetermined functions in response to input signals.

WIRELESS CONTROL - A control implemented in means other than fixed physical interconnections (such as radio waves or infrared beams) between the control, the associated devices, and an operator to perform predetermined functions in response to input signals.

INHERENT ENTRAPMENT PROTECTION SYSTEM - A system, examples being a motor current or speed sensing system, which provides protection against entrapment upon sensing an object and is incorporated as a permanent and integral part of the operator.

EXTERNAL ENTRAPMENT PROTECTION DEVICE - A device, examples being an edge sensor, a photoelectric sensor, or similar entrapment protection device, which provides protection against entrapment when activated and is not incorporated as a permanent part of an operator.

ENTRAPMENT - The condition when an object is caught or held in a position that increases the risk of injury.

Swing Gate Requirements

The operator is intended for installation only on gates used for vehicles. Pedestrians must be supplied with a separate access opening. The pedestrian access opening shall be designed to promote pedestrian usage. Locate the gate such that persons will not come in contact with the vehicular gate during the entire path of travel of the vehicular gate. (ref. UL325 56.8.4.b)

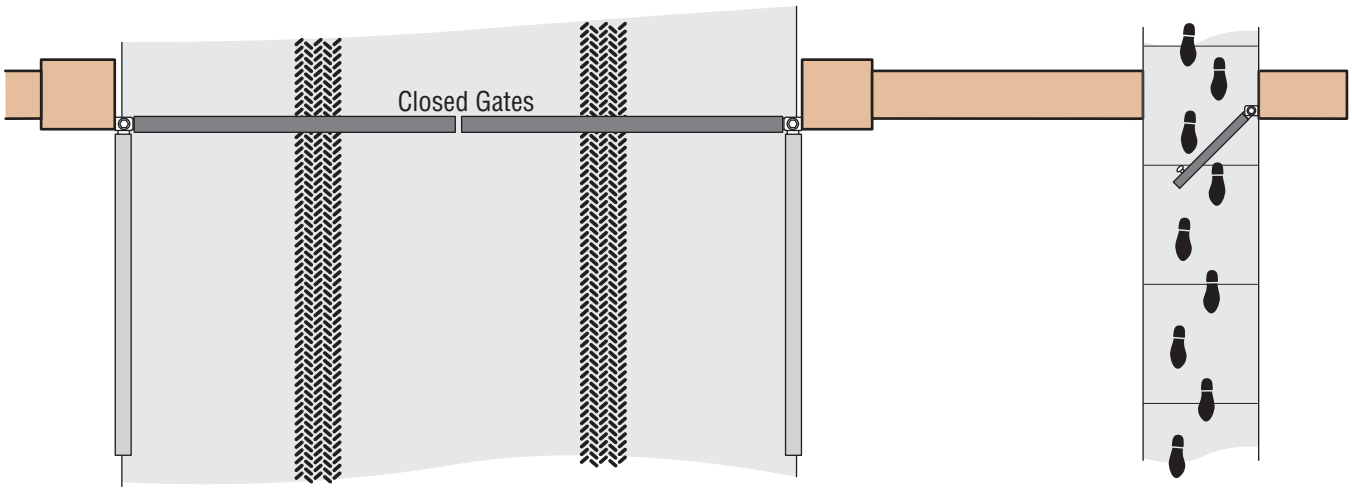

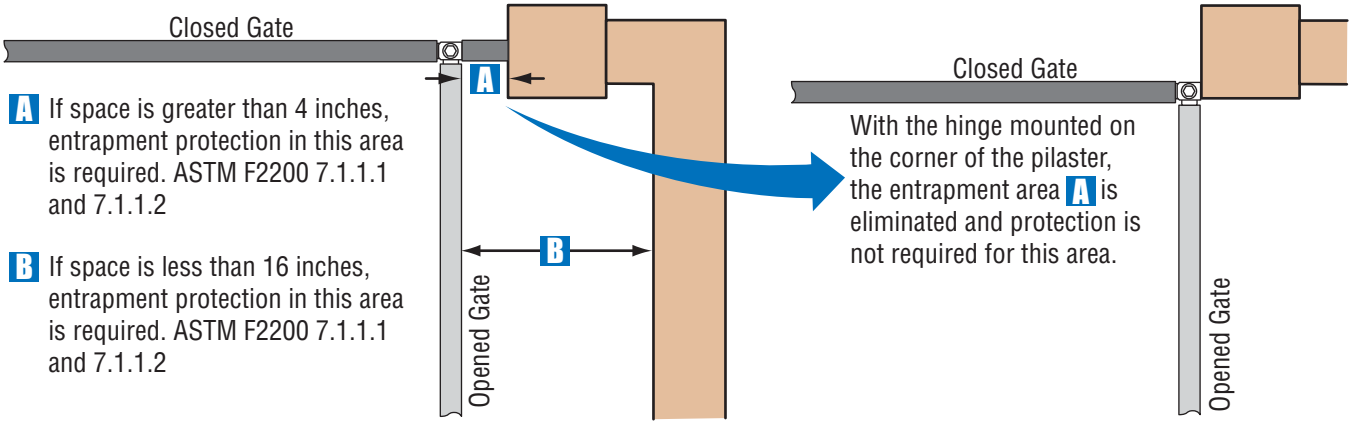

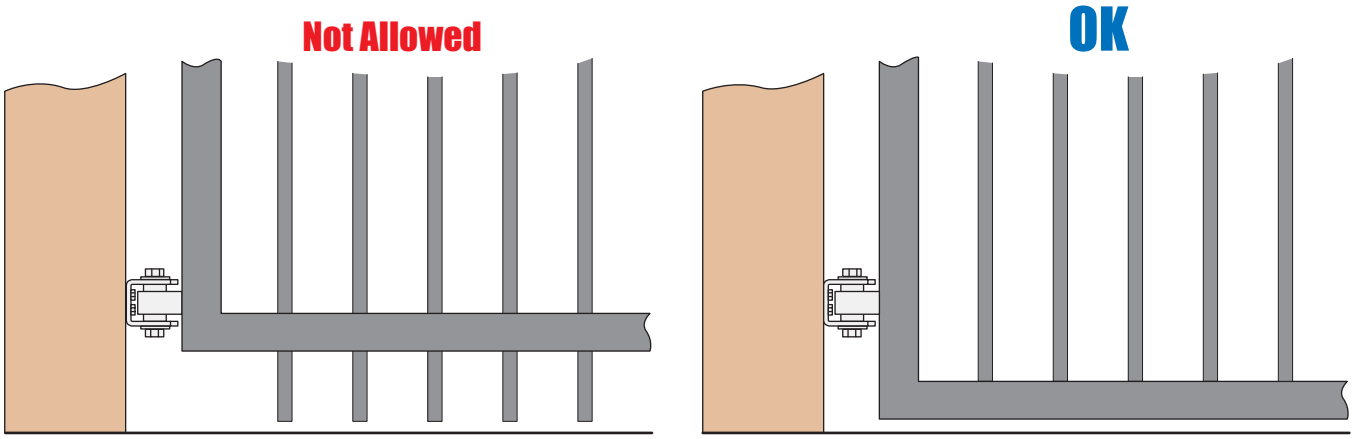

Gates shall have smooth bottom edges, with vertical bottom edged protrusions not exceeding 0.50 inches. ASTM F2200 4.3

Swing Gate Protection

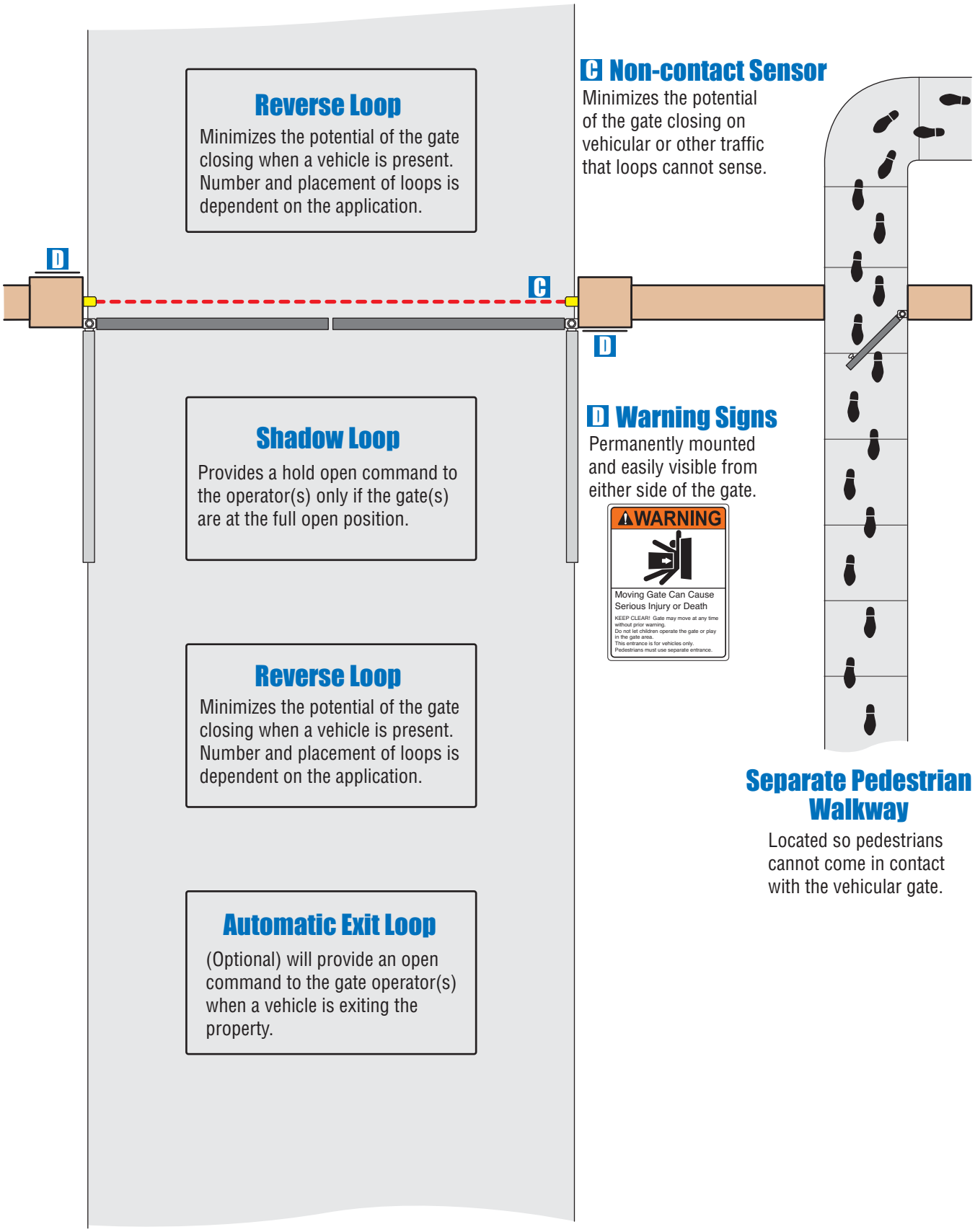

SECTION 1 - INSTALLATION

Prior to beginning the installation of the swing gate operator, we suggest that you become familiar with the instructions, illustrations, and wiring guide-lines in this manual. This will help insure that your installation is performed in an efficient and professional manner.

The proper installation of the vehicular swing gate operator is an extremely important and integral part of the overall access control system. Check all local building ordinances and building codes prior to installing this operator. Be sure your installation is in compliance with local codes.

1.1 Samples of Standard Installation

This procedure will work on small to medium size gates that open 90°. Gates that open wider than 90° will require the operator to be located further away than 13" from the gate hinge pivot point (See section 1.8, Gates opening wider than 90°).

For gates up to 12 feet

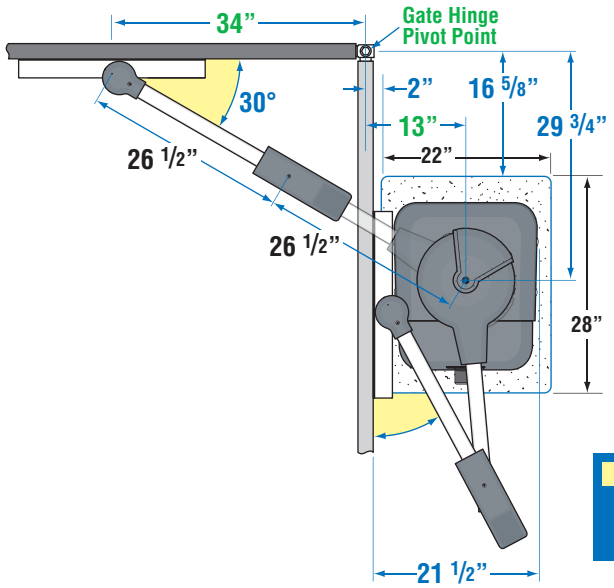

For gates greater than 12 feet

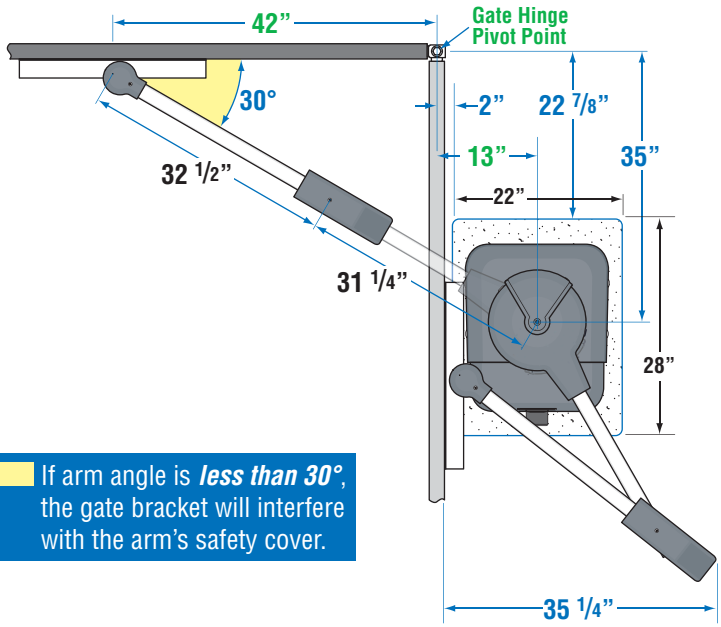

If arm angle is ***less than 30°***, the gate bracket will interfere with the arm's safety cover.

1.2 Location of Gate Operator

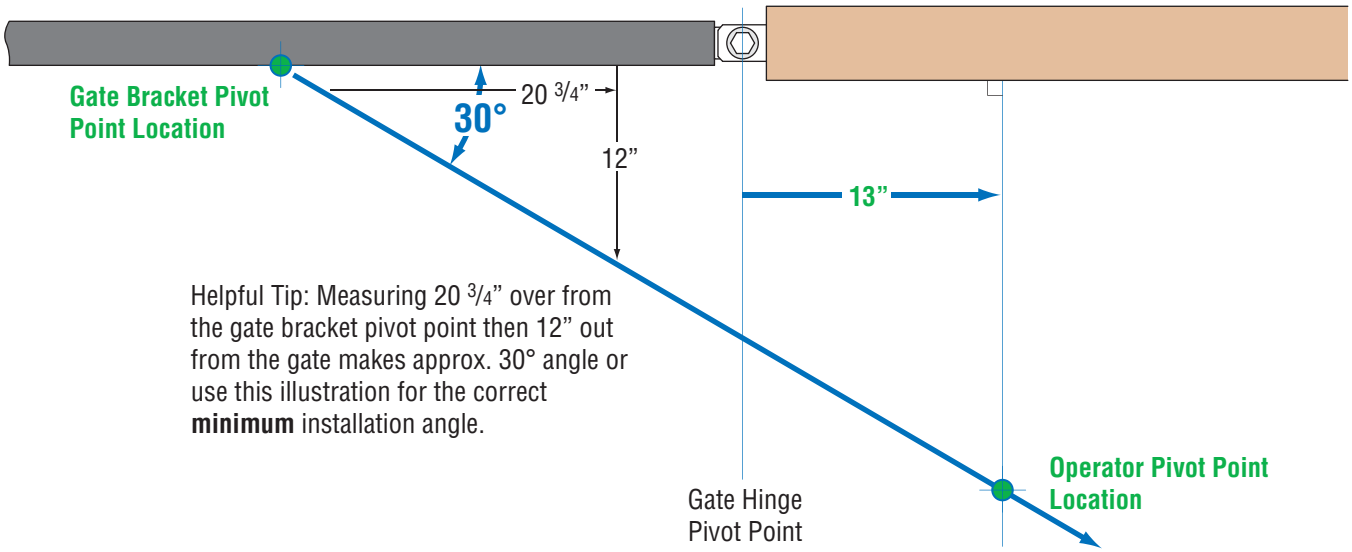

1.3 Concrete Pad and Conduit Locations

Once the location of the operator pivot point has been determined, construct a form for the concrete pad (reinforced concrete recommended) approximately 22” wide by 28” long and 4” minimum above the ground. The depth of the pad underground is determined by soil conditions and local building codes. Install any underground conduit running through the concrete pad (See section 2.1, Conduit Requirements). Pour concrete and let it cure **completely** (48 hours).

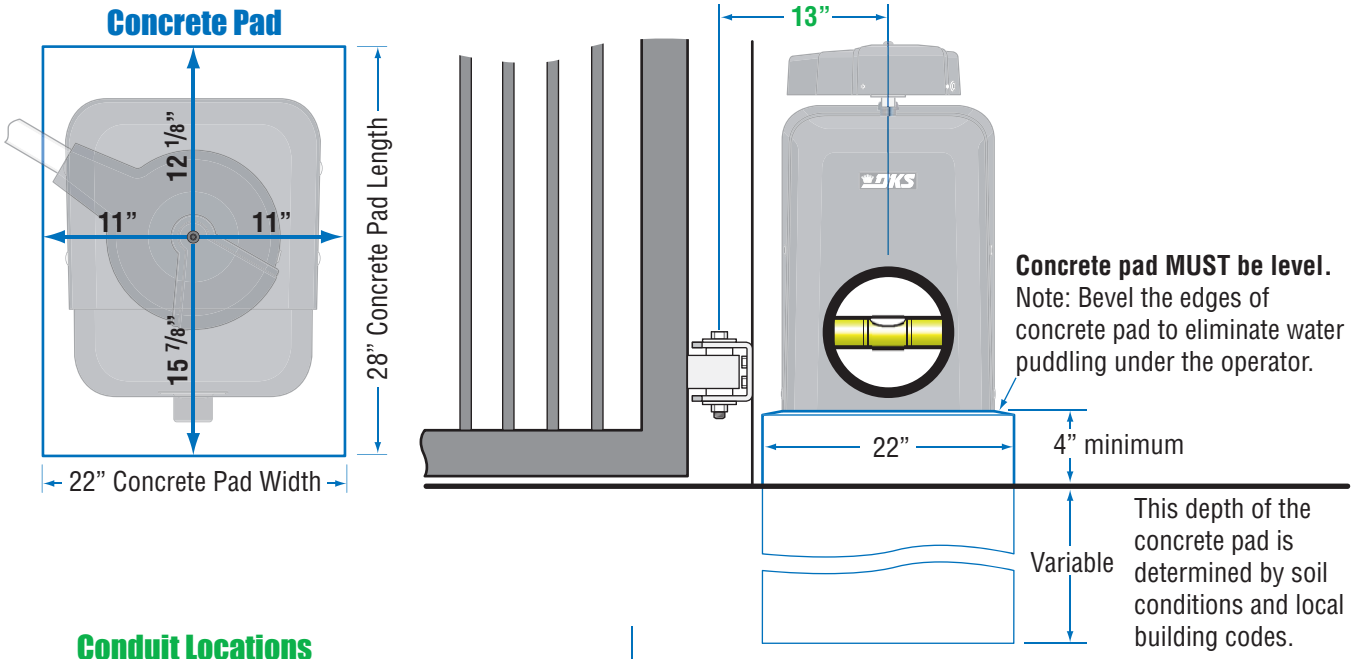

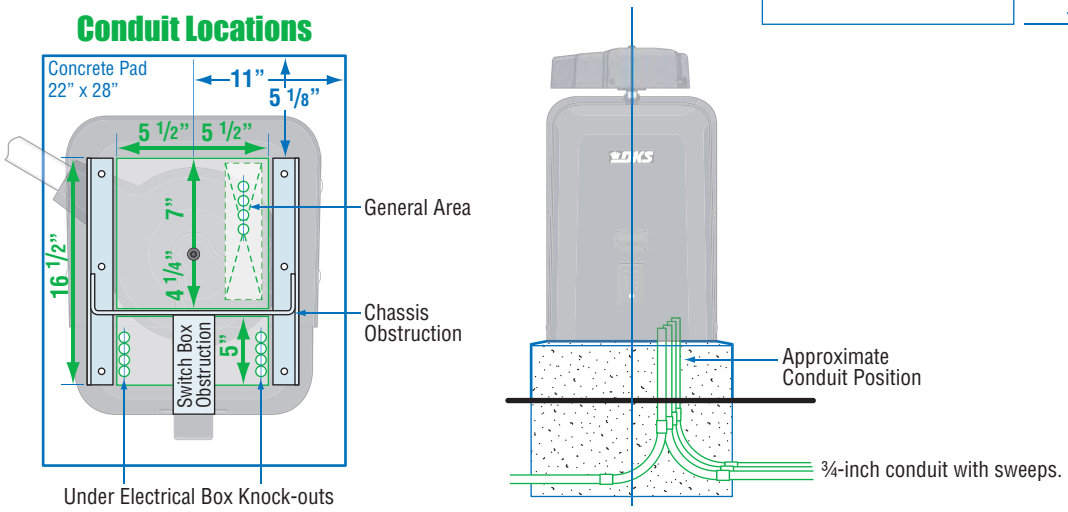

1.4 Securing Operator to Pad

Permanently attach the operator to the concrete pad using four (4) 3/8” x 3” sleeve anchors (not supplied).

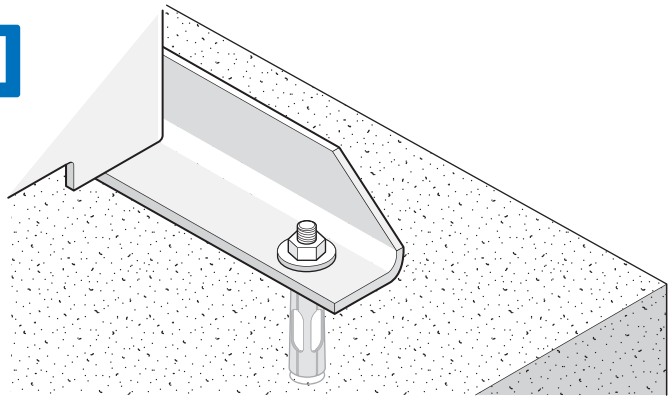

1.5 Attach Gate Bracket

A Release hub with release tool. **DO NOT REMOVE HUB!** **B** Bolt crank arm to operator. **C** Slide elbow assembly on crank arm.
D Bolt control arm to gate bracket. **E** Slide control arm into elbow assembly. **KEEP ARM ASSEMBLY LEVEL**.
F Bolt gate bracket to gate.

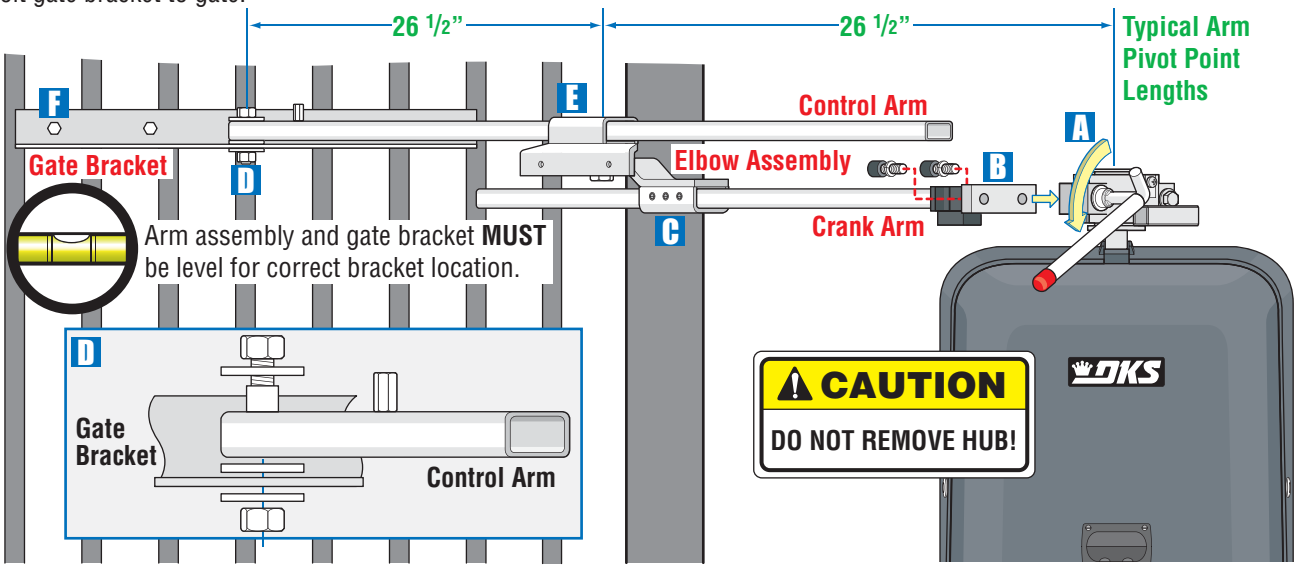

1.6 Determining Arm Lengths

Slide elbow assembly back and fourth, manually opening and closing gate until satisfied with the gate's 90° open and fully closed positions.

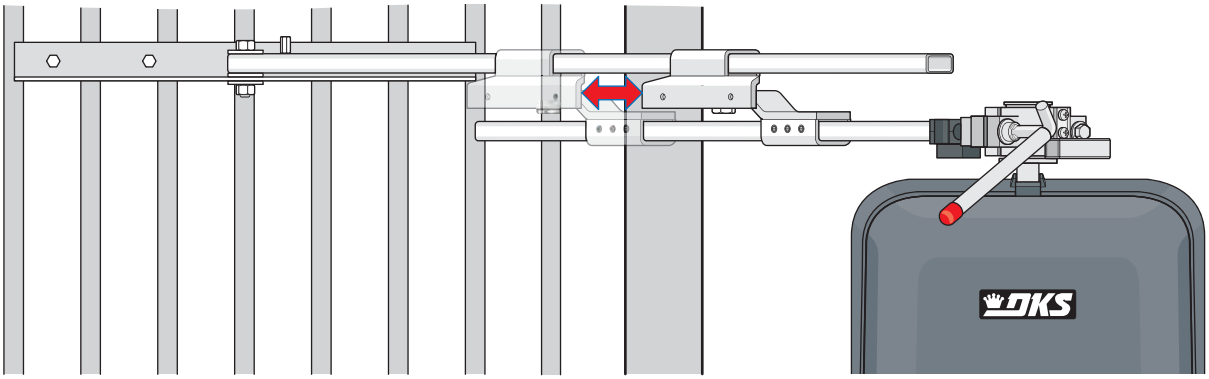

Mark and cut off excess arms. Secure arms to elbow assembly with 6 allen screws. Tighten hub and replace release tool. Install safety covers.

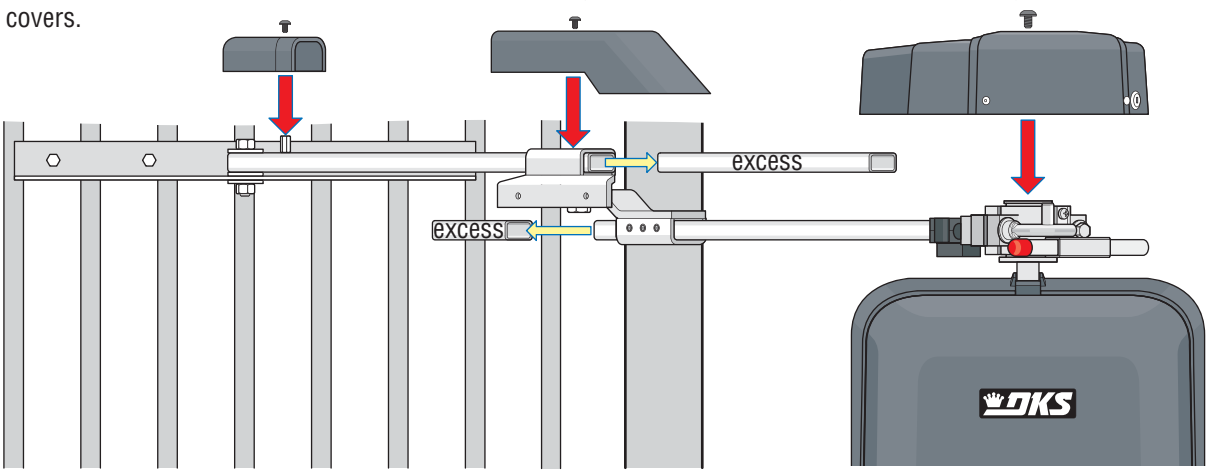

1.7 Installation of Warning Signs

This DoorKing Swing Gate Operator is shipped with two warning signs. The purpose of the warning sign is to alert uninformed persons, and to remind persons familiar with the gate system, that a possible hazard exists so that appropriate action can be taken to avoid the hazard or to reduce exposure to the hazard.

- **Permanently install the supplied warning signs in locations so that the signs are visible by persons on both sides of the gate.**
- Use appropriate hardware such as wood or sheet metal screws (not supplied) to install the warning signs.

1.8 Gates Opening Wider Than 90°

This type of installation requires the operator to be located further from the gate hinge pivot point. This distance varies depending on how far past 90° the gate will open.

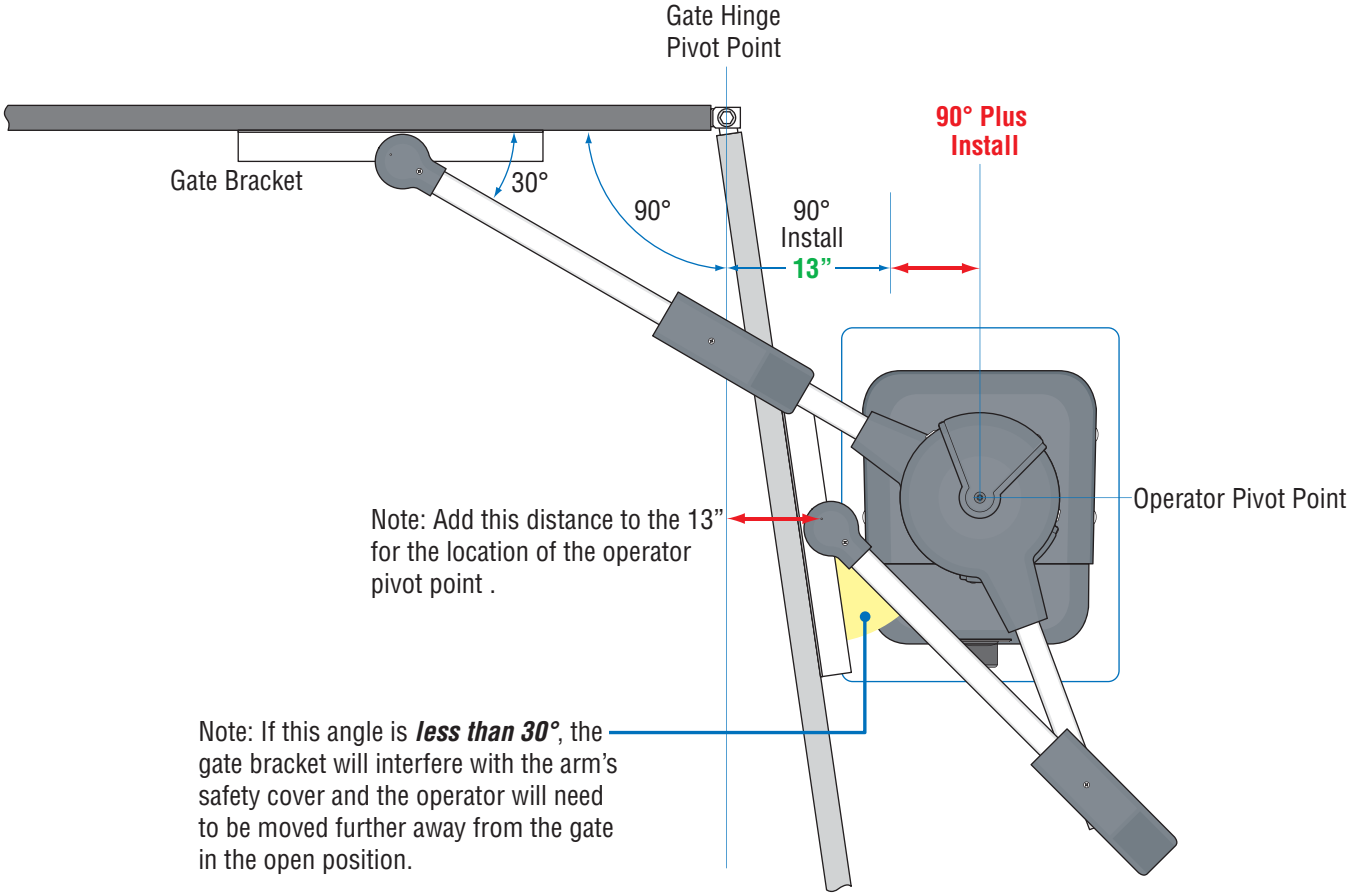

SECTION 2 - WIRING

Before attempting to connect any wiring to the operator, be sure that the circuit breaker in the electrical panel is in the OFF position. Permanent wiring must be installed to the operator as required by local electrical codes. It is recommended that a licensed electrical contractor perform this work.

Since building codes vary from city to city, we highly recommend that you check with your local building department prior to installing any permanent wiring to be sure that all wiring to the operator (both high and low voltage) complies with local code requirements.

THIS GATE OPERATOR MUST BE PROPERLY GROUNDED!!

2.1 Conduit Requirements

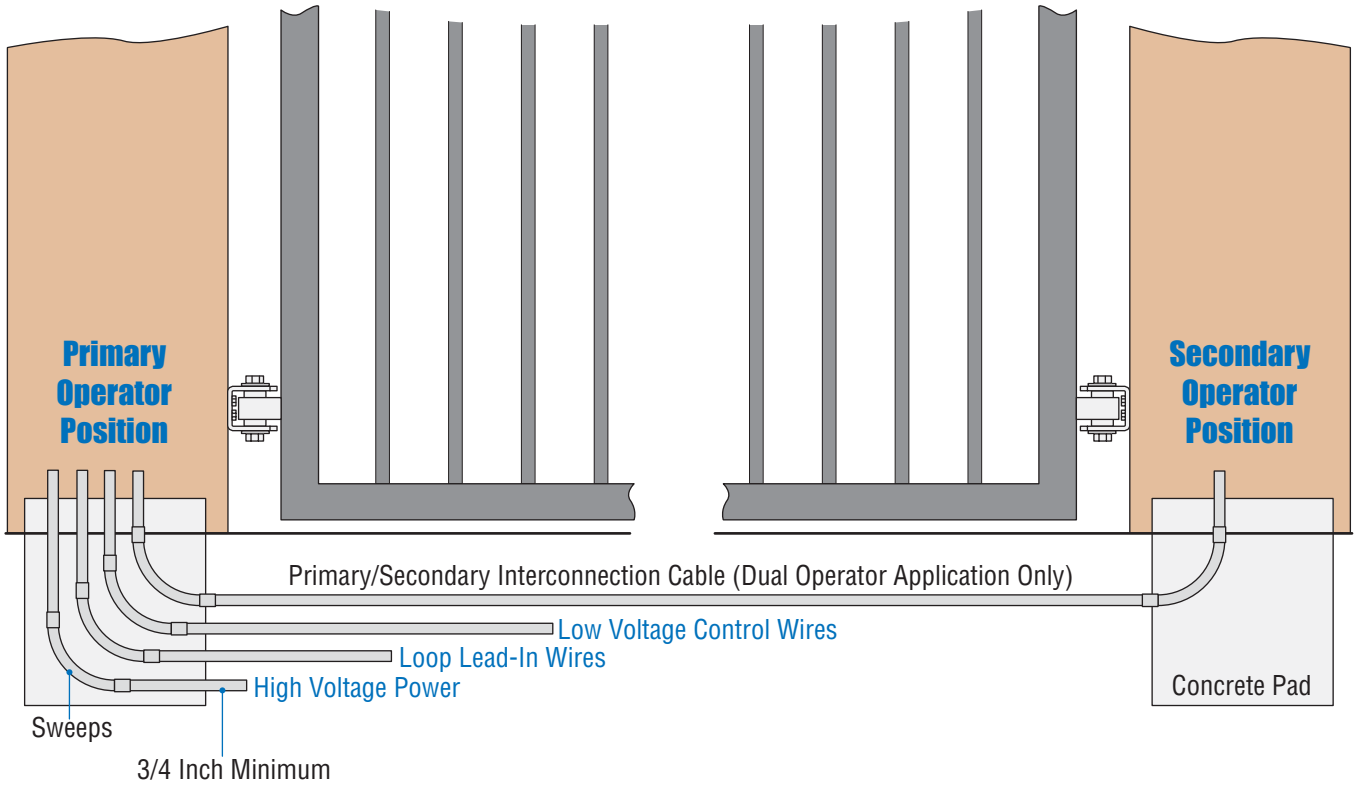

- The conduit requirements are for a typical swing gate operator installation (the secondary operator is shown for those applications where a secondary operator may be used). **The conduit requirements for your application may vary from this depending on your specific needs.**
- Use only sweeps for conduit bends. Do not use 90° connectors as this will make wire pulls very difficult and can cause damage to wire insulation.
- We suggest that minimum ¾-inch conduit be used.
- Be sure that all conduits are installed in accordance with local codes.

2.2 High Voltage Wire Runs

The distance shown in the chart is measured in Feet from the operator to the power source. If power wiring is greater than the maximum distance shown, it is recommended that a service feeder be installed. When large gauge wire is used, a separate junction box must be installed for the operator connection. The wire table is based on stranded copper wire. Wire run calculations are based on a 110 VAC power source with a 3% voltage drop on the power line, plus an additional 10% reduction in distance to allow for other losses in the system.

This table illustrates the high voltage wire size and distance requirements.

Model Type	Voltage Required	Amps Required	Wire Size / Distance in Feet			
			12 AWG	10 AWG	8 AWG	6 AWG
6500 1/2 HP	115	5.4	170	275	460	685
6500 1/2 HP	230	2.7	685	1,100	1,830	2750
6500 1/2 HP	460	1.35	2,875	4,600	7665	11,500
6500 1 HP	115	9.7	100	170	280	520
6500 1 HP	230	4.9	380	650	1,100	1,600
6500 1 HP	460	2.5	1,500	2,500	4,000	6,500

Reduce the wire distance in half for primary/secondary dual gate applications

Never run high voltage and low voltage wires in the same conduit. Keep them in separate conduits.

2.3 High Voltage Terminal Connections

115 VAC Models

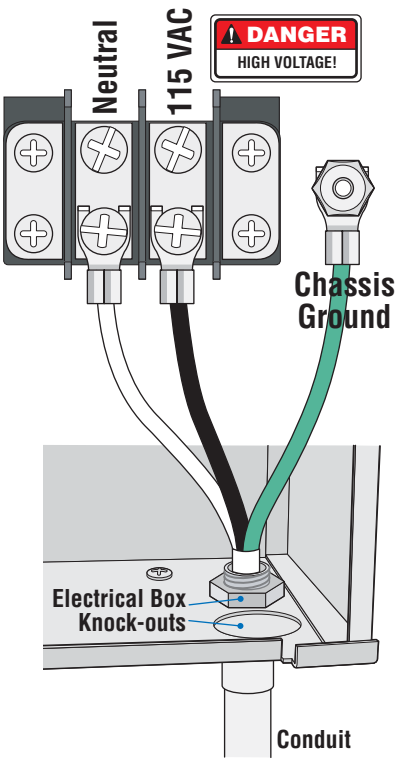

- Route incoming high voltage power through conduit and into the operator as shown.
- Be sure wiring is installed in accordance with local codes. Be sure to color code all wiring.
- Connect power wires as shown.
- It is recommended that a surge suppressor be installed on the high voltage power lines to help protect the operator and circuit board from surges and power fluctuations.
- For 230 and 460 Volt 3-phase input, use only two legs of the incoming 3-phase power.
- Secondary operator in a dual operator application gets power through the 8-wire connector that links the 2 operators together. See 2.7 Primary/Secondary (dual) gate connection.

230 VAC/460 VAC Models

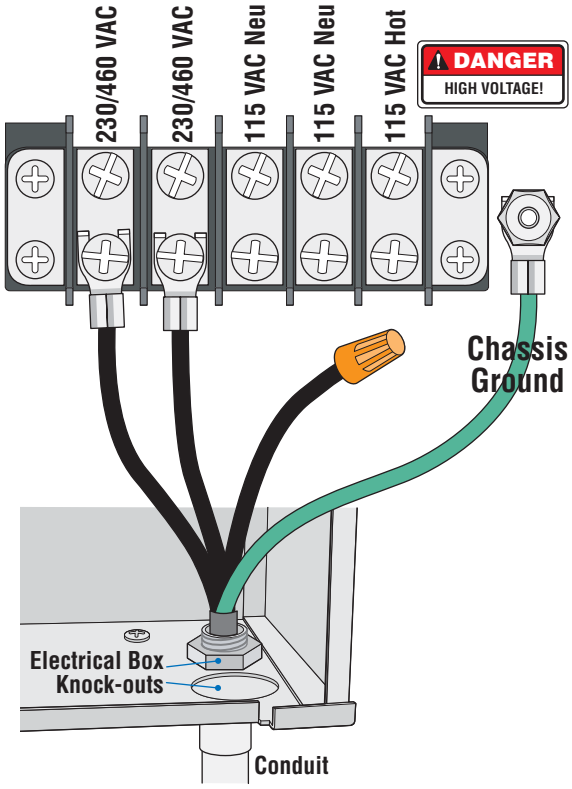

DO NOT cycle the operator without the OPEN and CLOSE limit sensors in their specific open and close positions. The limit sensors or the AC power switch are the only ways to stop the operator once an open cycle has started. This could cause damage to the gate and/or operator if the gate opens too far!

2.4 Control Wiring

- Diagram at right is for illustration purposes. The actual placement of the secondary protection devices is dependent on the specific installation requirements.
- Secondary entrapment protection devices must be installed with this gate operator. This protection may be provided by non-contact or contact sensors, or a combination of both.
- Secondary device wiring shows inputs to the circuit board only. Photo-cells must be supplied with power.
- Refer to the safety instructions in the front of this manual for more information.
- Controls must be installed a minimum of 10-feet from the gate or installed in such a way that the person using the control cannot come in contact with the gate or gate operator.
- All inputs to the 4405 circuit board are Normally Open (N.O.).

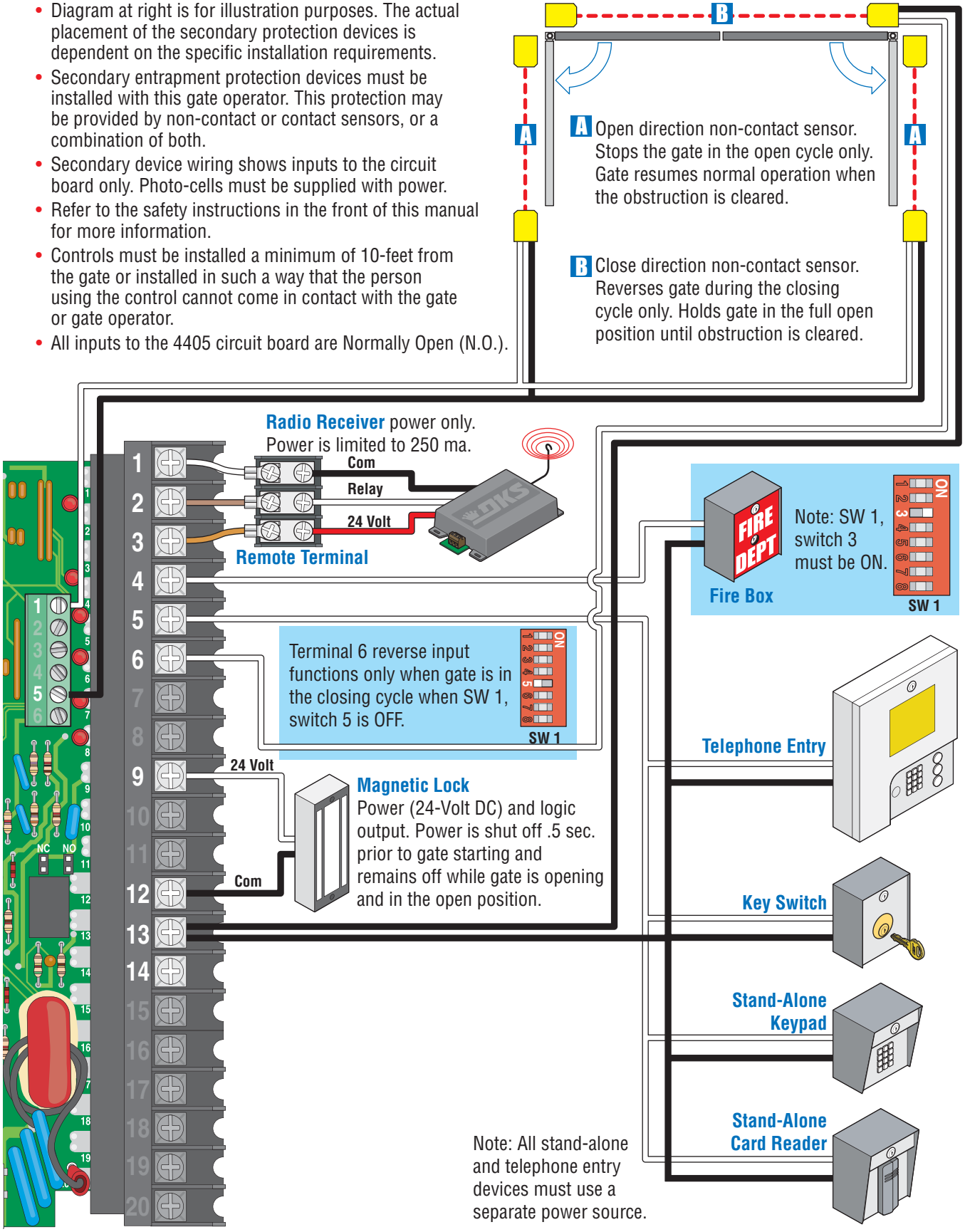

2.5 Loop Detector Wiring

Loops and loop detectors **MUST** be installed with this gate operator to help prevent the gate from accidentally closing on vehicular traffic.

- Loop detector wiring is shown for DoorKing plug-in loop detectors only. If other loop detectors are used, refer to the installation instructions supplied with those detectors for wiring instructions.
- If other detectors are used, use a separate power supply to power these detectors.
- Loop layout shown is for a typical swing gate application with two-way traffic, or one-way exit only traffic.
- Refer to the Loop Information Manual (available from www.dkaccess.com) for more information on loops and loop detectors.

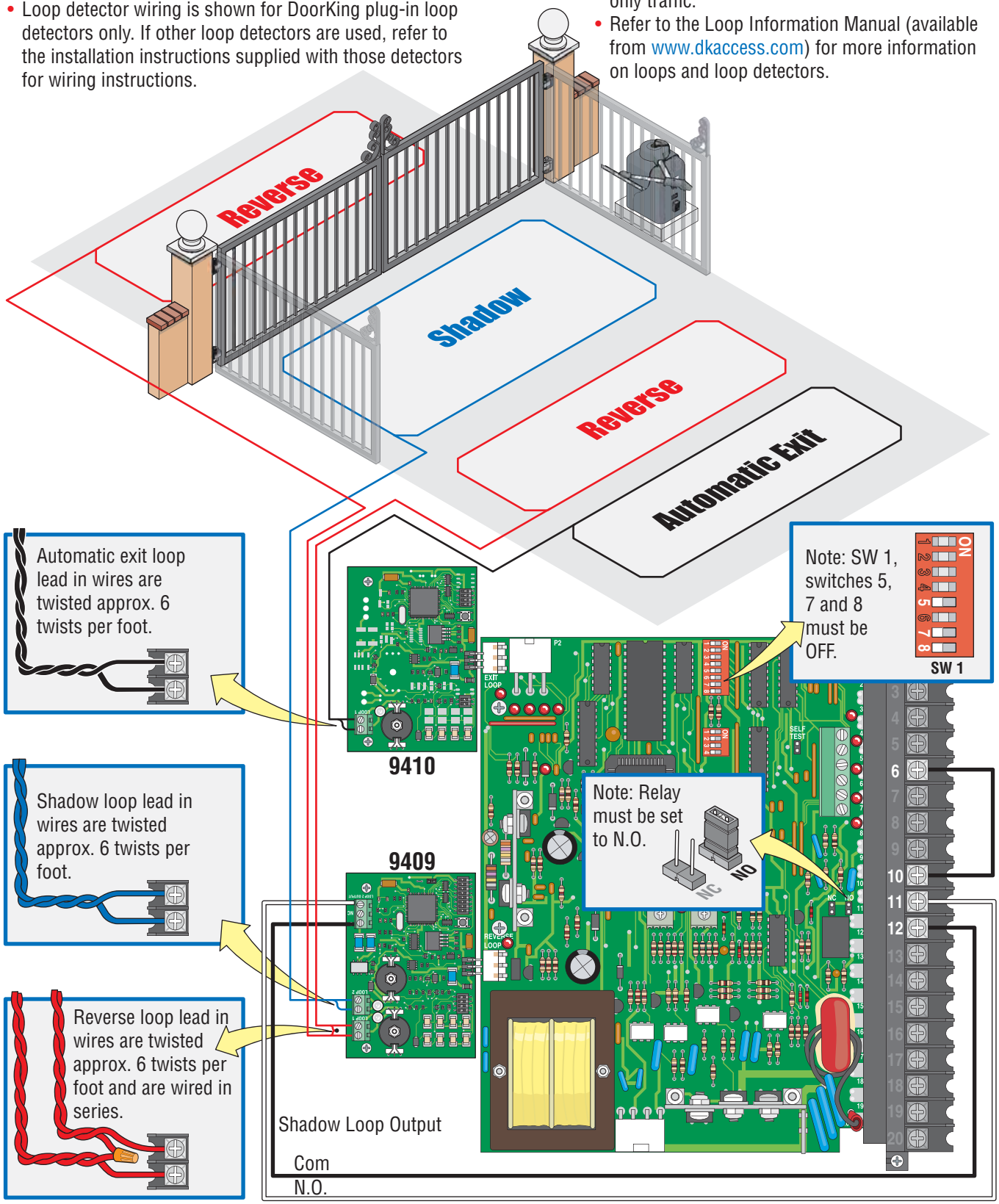

2.6 Auxiliary Device Wiring

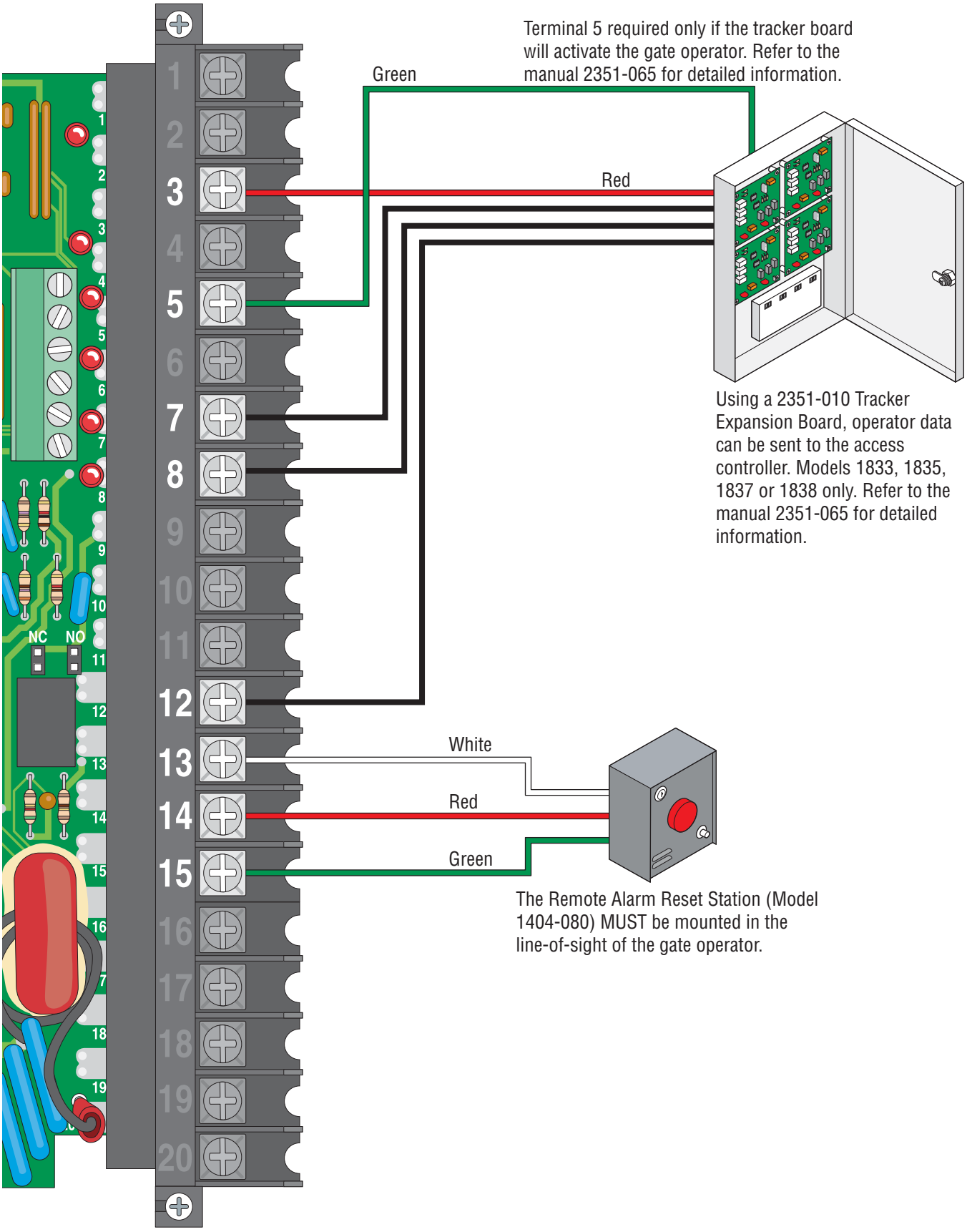

2.7 Primary / Secondary (Dual) Gate Connection

Connect the Primary / Secondary interconnection wiring as shown. Wire colors are based on DoorKing interconnection cable (P/N 2600-75x). Power is supplied to the secondary operator by the interconnection cable.

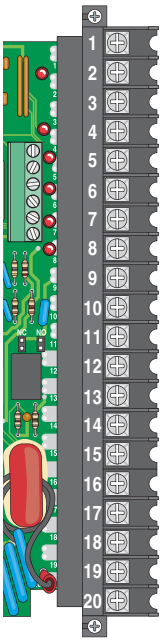

Primary Operator Control Board

- All control, loop detector, safety and auxiliary devices are wired to the primary operator.

Secondary Operator Terminal

- Secondary operator contains NO control board.

Interconnection Cable Wiring

Primary Operator		Secondary Operator
(Red) Motor 1	⟷	Motor 1 (Red)
(Blue) Motor 2	⟷	Motor 2 (Blue)
(White) Neutral 3	⟷	Neutral 3 (White)
(Green) Ground 4	⟷	Ground 4 (Green)
(Orange) Limit 5	⟷	Limit 5 (Orange)
(Yellow) Limit 6	⟷	Limit 6 (Yellow)
(Gray) COM 7	⟷	COM 7 (Gray)
(Purple) 24VAC 8	⟷	24VAC 8 (Purple)

Primary Operator Second Terminal

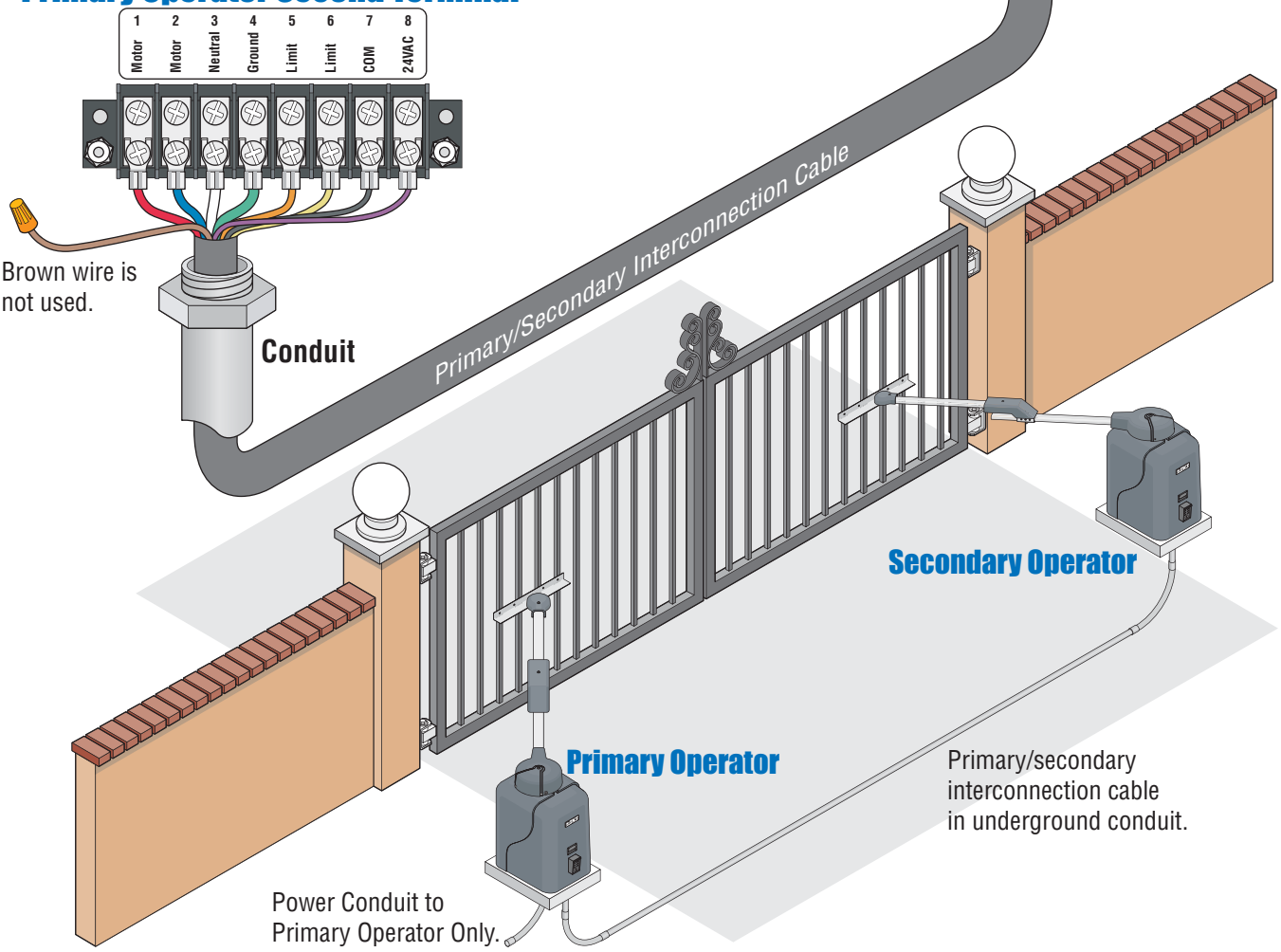

2.8 Main Terminal Description

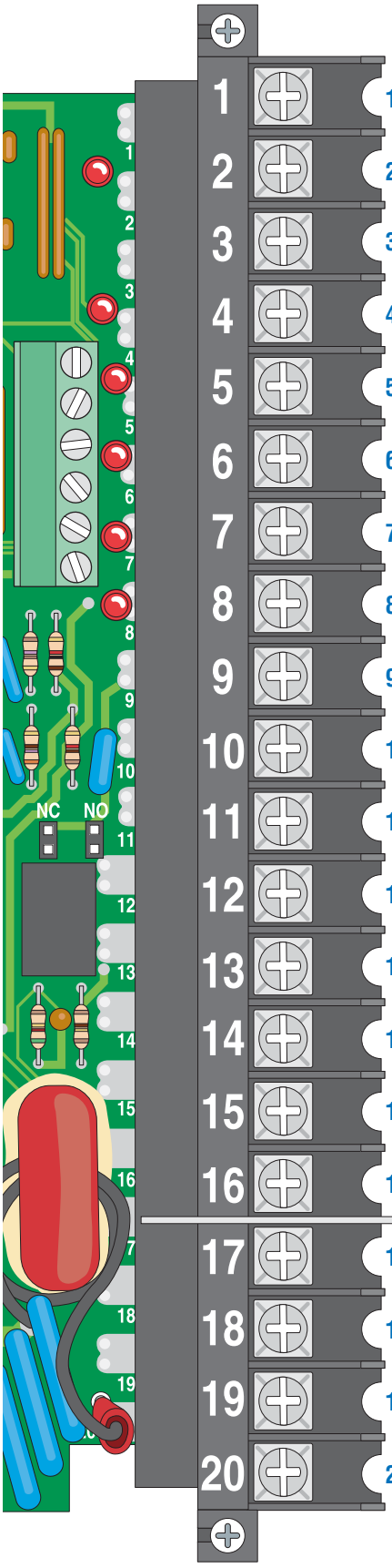

1. LOW VOLTAGE COMMON
2. RADIO RELAY (SINGLE BUTTON) ACTIVATION
3. 24 VAC Radio Receiver Power Only (250 ma. maximum)
4. SINGLE BUTTON ACTIVATION INPUT/ OPEN LOOP LOGIC OUTPUT
5. SINGLE BUTTON ACTIVATION
6. REVERSE (SAFETY) INPUT/ SHADOW INPUT
7. GATE TRACKER DATA
8. GATE TRACKER BUSY
9. MAGNETIC LOCK OUTPUT
10. DRY RELAY CONTACT
11. DRY RELAY CONTACT
12. LOW VOLTAGE COMMON
13. LOW VOLTAGE COMMON
14. ALARM
15. ALARM RESET
16. SECONDARY OPERATOR CURRENT SENSOR
17. MOTOR
18. MOTOR
19. 115 VAC HOT
20. 115 VAC NEUTRAL

4

- If SW 1, switch 3 is ON, this input is identical to Single Button Activation.
- If SW 1, switch 3 is OFF, this terminal becomes the logic output of the OPEN loop detector.

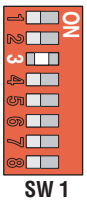

5

- When gate is closed, input will open gate.
- When gate is open and auto close timer SW 1, switch 4 is turned on, input will re-set and hold timer.
- When gate is open and auto close timer SW 1, switch 4 is turned off, input will close gate.
- When gate is closing, input will reverse gate.

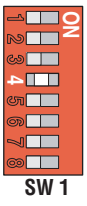

6

- When gate is closed, this input has no affect on the gate operator.
- When gate is open and auto close timer SW 1, switch 4 is turned ON, input will re-set and hold timer.
- When gate is open and auto close timer SW 1, switch 4 is turned OFF, input will prevent gate from closing.
- When gate is closing, input will reverse gate if SW 1, switch 5 is OFF.
- When gate is closing, input has no affect on the gate operator if SW 1, switch 5 is ON (set for shadow input).

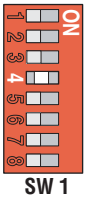

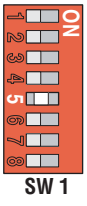

9

- 24-volt DC magnetic lock power is provided constantly except when the gate is opening or open.

10

- Operation of relay is dependent on setting of SW 1, switches 7 and 8. Relay contacts can be set for Normally Open (NO) or Normally Closed (NC) operation. Contact rating is 1 amp maximum at 24-volts DC.

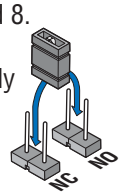

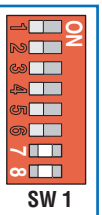

2.9 Auxiliary Terminal Description

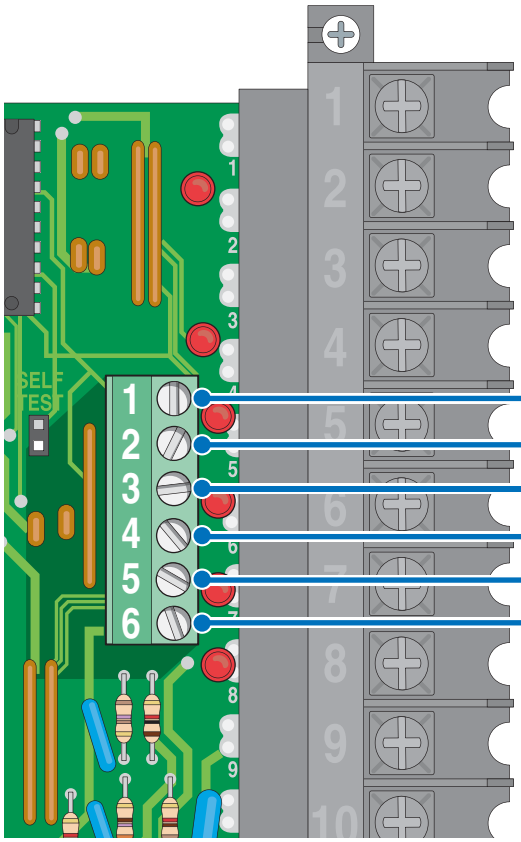

2.10 Second Terminal Description

This terminal is used to connect the secondary operator in a dual gate application.

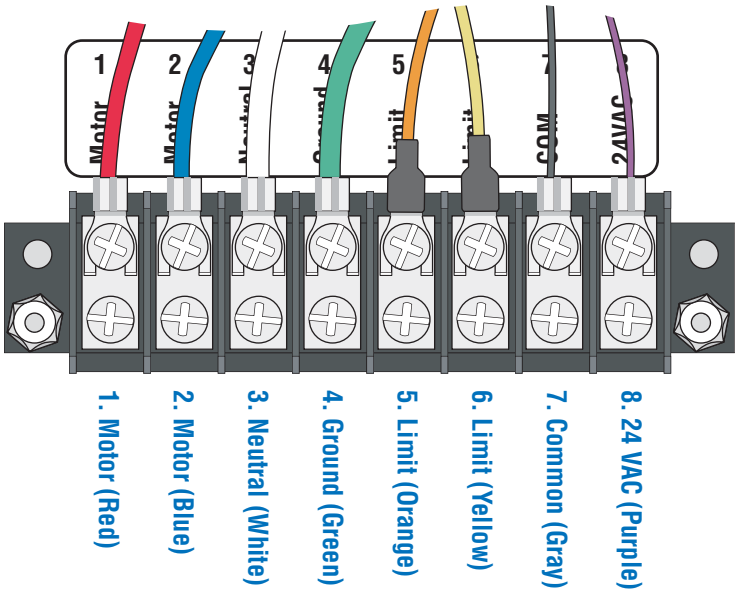

SECTION 3 - ADJUSTMENTS

The switch settings and adjustments in this chapter should be made after your installation and wiring to the operator(s) is complete. **Whenever any of the programming switches on the circuit board are changed, power must be shut-off, and then turned back on for the new setting to take effect.**

3.1 Circuit Board Adjustments

DIP-Switches

- Set the DIP-switches on the circuit board to the desired setting. See switch-setting charts on next page.

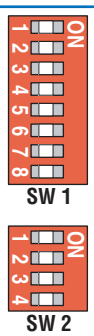

Auto Close Timer

- Auto close timer (when turned on) SW 1, switch 4.

Adjust from 1 second (full counter clockwise) to approximately 23 seconds (full clockwise).

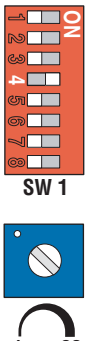

Self Test

Self test mode is for bench checks only. The operator will continually cycle the gate.

The jumper must be set at normal mode to function.

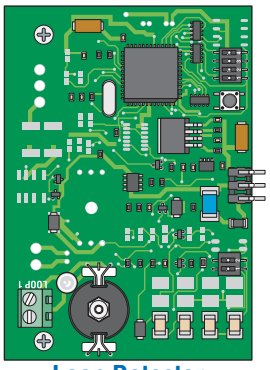

Loop Detector
9410

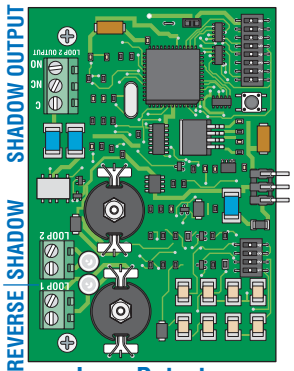

Loop Detector
9409

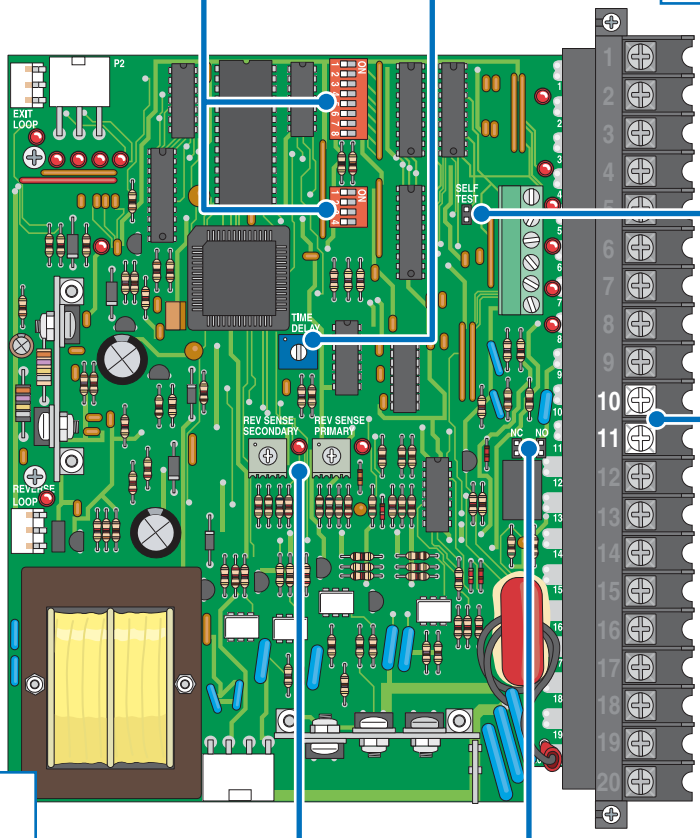

Reverse Sensor

- Adjust reversing sensitivity for PRIMARY (single) and SECONDARY (dual) operators.

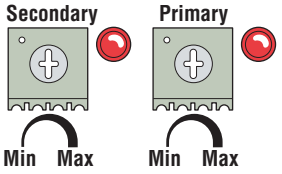

Dry Relay Contact

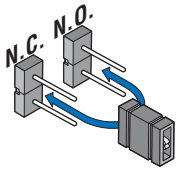

- Dry relay contacts (terminals 10-11) can be set for Normally Open (NO) or Normally Closed (NC) operation by placing the relay shorting bar on the N.O. or N.C. pins respectively.

3.2 DIP-Switch Settings

The two DIP-switches located on the circuit board are used to program the operator to operate in various modes and to turn on or off various operating features. Whenever a switch setting is changed, power to the operator must be turned OFF and then turned back on for the new setting to take affect. Check and review ALL switch settings prior to applying power to the operator.

SW 1 (Top 8 Switches)			
Switch	**Function**	**Setting**	**Description**
1	Primary		Direction-operator should cycle open upon initial power up and open command.
2	Secondary		Direction-operator should cycle open upon initial power up and open command.
3	Open loop	OFF	Terminal 4 is the output from the open detector.
	Logic Output	ON	Terminal 4 is an open input.
4	Auto-Close Timer	OFF	Auto-close timer is OFF. Manual input required to close gate.
		ON	Auto=close timer is ON. Adjustable from 1-23 seconds.
5	Reverse Loop	OFF	Terminal 6 is a Reverse input.
	Shadow Loop	ON	Terminal 6 is a Shadow input.
6	Single Operator	OFF	Switch must be OFF for single operator.
	Dual Operators	ON	Switch must be ON when bi-parting (dual) gates are used.
7 and 8	Relay	7-OFF 8-OFF	Relay activates when gate is open.
		7-OFF 8-ON	Relay activates when gate is not closed.
		7-ON 8-OFF	Relay activates when gate is opening and open.
		7-ON 8-ON	Relay activates when gate is opening and closing.

Switch 1 Sets direction of the primary operator so that the operator cycles open upon initial power up and open command. If the operator begins to cycle close upon initial power up and open command, turn power off and change the setting on this switch.
Switch 2 Sets direction of the secondary operator so that the operator cycles open upon initial power up and open command. If the operator begins to cycle close upon initial power up and open command, turn power off and change the setting on this switch.
Switch 3 Determines if the output of the loop detector (DoorKing loop detectors only) plugged into the EXIT port will be sent directly to the microprocessor to open the gate, or if the output is directed to Terminal 4 where it can then be connected to other input terminals.
Switch 4 Turns the auto close timer on or off. Maximum time that the close timer can be set for is approximately 23 seconds.
Switch 5 This switch sets the input at Terminal 6 to act as a normal reverse input or to act as a shadow input. A shadow input will only hold the gate operator in the open position once it is in the full open position. A shadow input will not reverse the direction of the gate operator once it begins its close cycle.
Switch 6 Sets up the circuit board for single or primary / secondary (dual) gate operation.
Switches 7-8 These work in conjunction with each other and determine when the relay on the board will be activated. This relay can be used as a switch for various functions such as illuminating a warning light when the gate is moving, or turning on a green light when the gate is full open. This relay is not available for these uses if it is being used for the shadow loop function.

SW 2 (Bottom 4 Switches)			
Switch	**Function**	**Setting**	**Description**
1	Gate Overlap	OFF	Primary and secondary operators start at the same time.
		ON	Secondary operator starts 1-2 seconds prior to the primary operator.
2	Magnetic lock	OFF	Magnetic lock is not used.
		ON	Magnetic lock is used and connected to terminals 9 and 12.
3	Spare		Not Used
4	Spare		Not Used

Switch 1 Used in primary / secondary applications, turning this switch ON will cause the start of the primary operator to be delayed 1-2 seconds. This allows the secondary gate to reach the full closed position prior to the primary gate, which is desirable when the gates are constructed with an overlap or if a magnetic lock is used to secure the gates.
Switch 2 If a magnetic lock is not used with the gate operator, leave this switch in the OFF position. Turn this switch ON if a magnetic lock is used and connected to Terminals 9 and 12. This applies magnetic lock power and logic to these terminals.
Switch 3 Spare switch, not used. Leave in OFF position.
Switch 4 Spare switch, not used. Leave in OFF position.

3.3 Limit Sensing System Adjustment

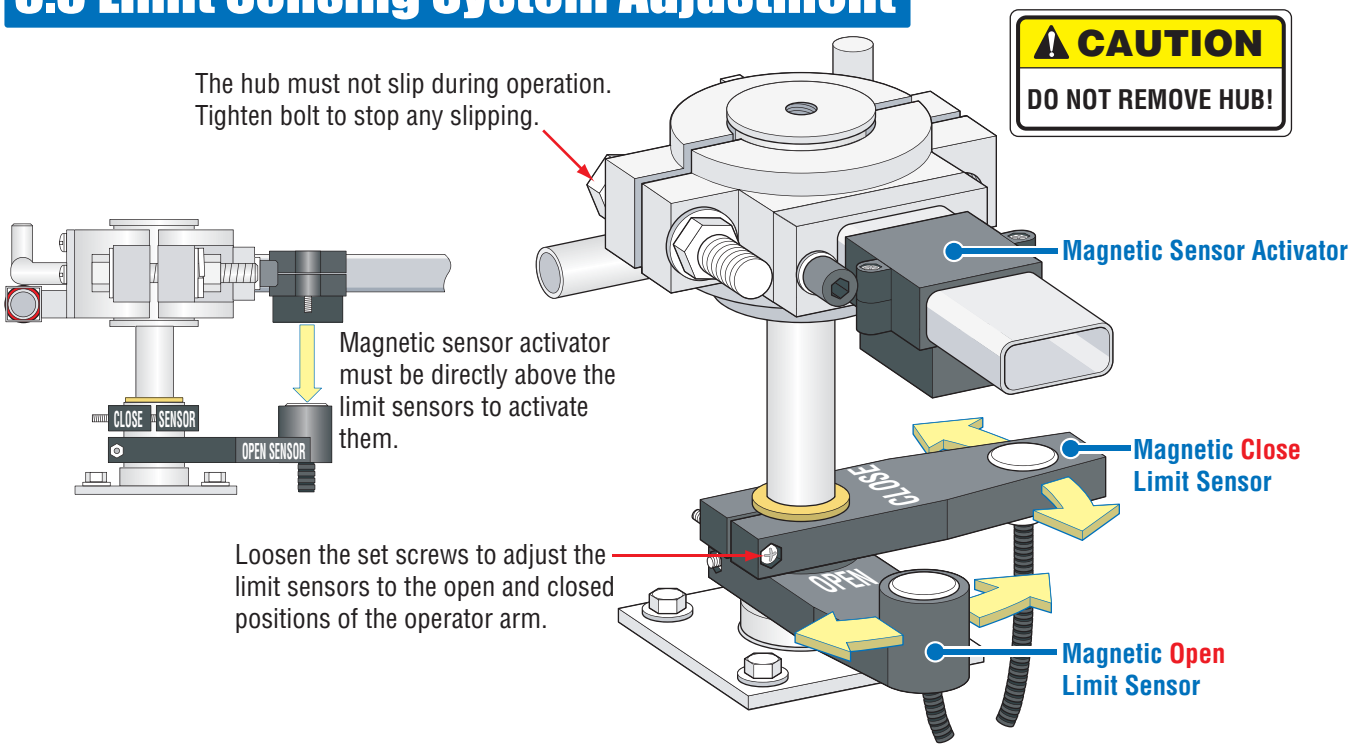

3.4 Inherent Entrapment Sensing Adjustment

This vehicular gate operator is equipped with an inherent adjustable reversing sensor (Type A) that is used as the primary entrapment sensing system. The gate will reverse upon sensing an obstruction in either the opening or closing gate cycle and will cause the gate operator to reverse direction should an obstruction be encountered. For the reverse system to function correctly, **THE HUB MUST NOT SLIP** when the gate encounters an obstruction. The gate must be properly installed and work freely in both directions. A good set of roller bearing hinges is essential for proper swing gate operation.

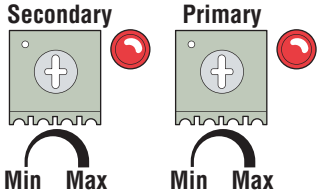

The ideal adjustment will allow the operator to move the gate through its entire travel cycle without reversing, but will reverse upon contact with an obstruction with no more than 40 Lbs of force. This force can be measured with a gate scale, DoorKing P/N 2600-225.

3.5 Secondary Entrapment Protection System Connection

In addition to the inherent reversing sensor system, this operator has provisions for the connection of a non-contact (type B1) secondary entrapment protection device.

A secondary entrapment protection device must be installed with this operator.

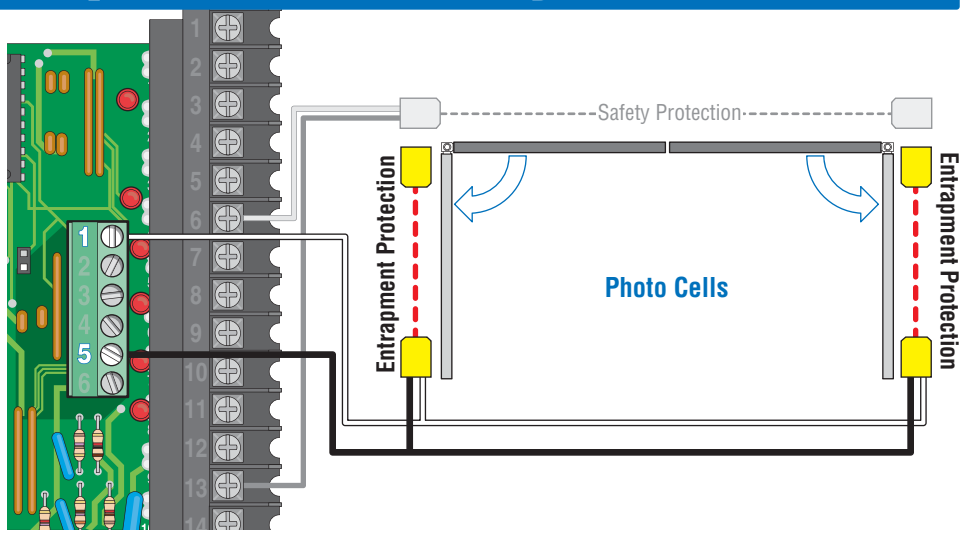

SECTION 4 - OPERATING INSTRUCTIONS

IMPORTANT SAFETY INSTRUCTIONS

WARNING - *To reduce the risk of injury or death:*

1. READ AND FOLLOW ALL INSTRUCTIONS.
2. Never let children operate or play with gate controls. Keep the remote control away from children.
3. Always keep people and objects away from gate. **NO ONE SHOULD CROSS THE PATH OF THE MOVING GATE**.
4. Test the operator monthly. The gate MUST reverse on contact with a rigid object or stop or reverse when an object activates the non-contact sensors. After adjusting the force or the limit of travel, retest the gate operator. Failure to adjust and retest the gate operator properly can increase the risk of injury or death.
5. Use the emergency release only when the gate is not moving and power has been shut-off.
6. KEEP GATES PROPERLY MAINTAINED. Read the owner's manual. Have a qualified service person make repairs to gate hardware.
7. The entrance is for vehicles only. Pedestrians must use separate entrance.
8. **SAVE THESE INSTRUCTIONS**.

4.1 Power and Reset Switches

Unlock the power switch cover and open to access the MAIN POWER, DC POWER and the operator RESET switch.

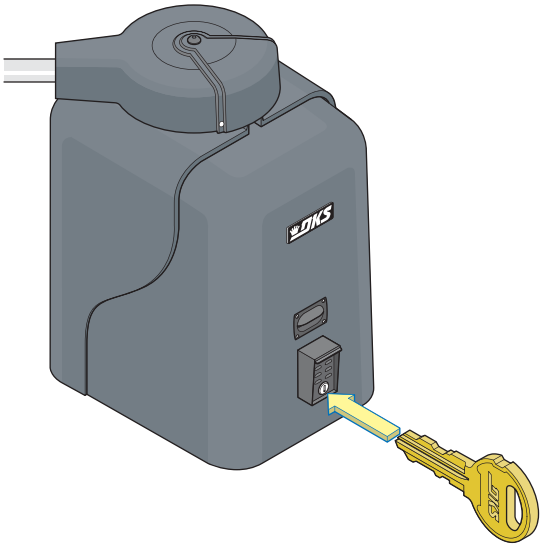

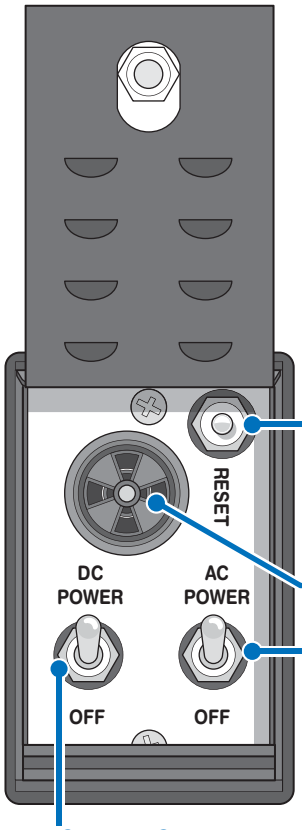

Reset Switch - Used to turn off the entrapment alarm and to reset the operator after a hard shutdown has occurred.

Alarm Speaker

AC Power Switch - Powers the operator ON (toggle up) or OFF (toggle down).

DC Power Switch - Turns the DC system power ON (toggle up) or OFF (toggle down).
This switch is only installed on model 6500 operators with the DC convenience open system installed.

4.2 Shutdown Conditions

Under various entrapment conditions the operator will assume either a **soft** or **hard (alarm)** shutdown. To determine what type of reset action is required, you will need to understand how the different entrapment conditions affect the gate operator.

Soft Shutdown

This occurs in various situations where the inherent or secondary entrapment protection devices have been activated. In a soft shutdown condition, the operator **will not** respond to any input that was present when the entrapment protection device sensed an obstruction. If the gate stops at the open position, the operator will not respond to the automatic close timer.

- **Example 1** - A time clock keys the gate open in the morning and an entrapment protection device senses an obstruction prior to the gate reaching the full open position. If the entrapment is sensed by the inherent system, the gate will reverse and run back to the closed position. The time clock input is still present, but the gate will not re-open.

NOTE: In some systems, the time clock input comes from the telephone entry system relay. This same relay may also provide open commands for a card reader, MicroPLUS transmitters and the visitor telephone entry. If so, these devices will also be disabled in a soft shutdown condition.

- **Example 2** - If the gate is closing and an entrapment protection device is activated, the gate will either stop or reverse and run back to the open position, depending upon if the secondary or inherent device was activated. The automatic close timer will not close the gate.

- **Example 3** - Vehicle arrives at open loop and gate runs towards the open position. The inherent entrapment protection is activated. The gate reverses and runs back to the closed position. If the vehicle is still present at the open loop a soft shutdown condition does not occur. The loop input provides an immediate reset of the operator and the gate will again run to the open position.

Resetting a Soft Shutdown

In some conditions, a soft shutdown will reset as soon as the entrapment condition clears. For example, if a non-contact sensor (photo cell) is sensing an obstruction, the operator will stop the gate and assume a soft shutdown condition. When the photocell clears, the operator will return to normal operation.

When the operator is in a soft shutdown, activation of any "intended input" will reset the operator. An "intended input" includes any command, any standard safety input and any loop input. Activating any of these inputs will reset the gate. At that point the gate will return to normal operation. If the gate is open, the automatic close timer will then time out and close the gate.

Hard Shutdown

A hard shutdown condition occurs when the inherent entrapment protection system has sensed two consecutive obstructions before the gate reaches the full open or closed position.

- **Example** - The gate is closing and the inherent entrapment protection system senses an obstruction and causes the gate to reverse direction. As the gate begins to run in the open direction, a second obstruction is sensed prior to the gate reaching the full open position. Once the second obstruction has been sensed, the operator will stop, the audio alarm will be activated and all standard inputs are shut down (including open commands, safety commands, loop inputs, etc.).

NOTE: The audio alarm will remain activated for a maximum of five minutes, or until the operator receives a reset input. The hard shutdown condition will remain in affect even if the audio alarm shuts off after five minutes.

- After 5 minutes, the audio alarm will “chirp” every 5 seconds. This indicates that the operator is in a hard shutdown condition and the reset switch must be activated to reset the operator and silence the alarm.

Resetting a Hard Shutdown

When the operator is in a hard shutdown condition (audio alarm activated or audio alarm “chirps” every 5 seconds), the only way to reset the gate operator and return it to normal operation is to activate the alarm reset input (auxiliary terminals 2 and 3). An alarm-reset switch can be mounted external of the gate operator provided that it is installed in the line of sight of the gate and gate operator.

- Before resetting a hard shutdown, determine why the shutdown occurred. Inspect the gate for any obstructions along its path that could have activated the inherent entrapment sensing system. Inspect the gate and gate hardware.

NOTE: DoorKing operators have a built-in alarm reset push button mounted on the operator above the power ON-OFF toggle switch. Activating this button will return the gate operator to normal operation, but will not activate the gate operator.

Once the gate has been reset, an open or close command is needed to start the gate operator. Most activating commands will cause the gate operator to cycle to the open position. This includes activation of a key switch or open command and activation of an open loop. Activation of a close command will run the gate to the closed position.

4.3 Manual Gate Operation

This operator is equipped with a manual release system that will allow the gate to be pushed open in the event of a power outage or equipment failure.

Never attempt to manually push open any gate with an operator attached to it until you have verified that power to the operator has been shut-off.

Emergency Vehicle Access Conditions

The automatic vehicular gate system must be designed to allow access to emergency vehicles under different operating conditions.

1. During normal powered operation, emergency vehicles access the gate by use of the emergency vehicle access device installed on your gate system. The type of device that is used in your community is dependent on your city codes. These devices may include (but are not limited to) Fire Department lock boxes, Click-2-Enter radio receivers, strobe light sensors, siren sensors, etc.

2. In the event of a power failure, the emergency vehicle access device may not be functional because the gate operator is un-powered. If the gate operator is equipped with a convenience open system, this system will automatically open the gate when primary (AC) power is removed. NOTE: DC convenience open systems are optional and your gate system may or may not be equipped with one. Check with your installer to determine if your gate system is equipped with a convenience open system.

3. In the event of a primary (AC) power failure and a back-up system (DC) power failure (low charged or dead batteries for example), the system must have a release system to allow the gate to be manually operated.

Manual Release

- Be sure that power is removed or shut-off prior to placing the gate operator in manual operation.

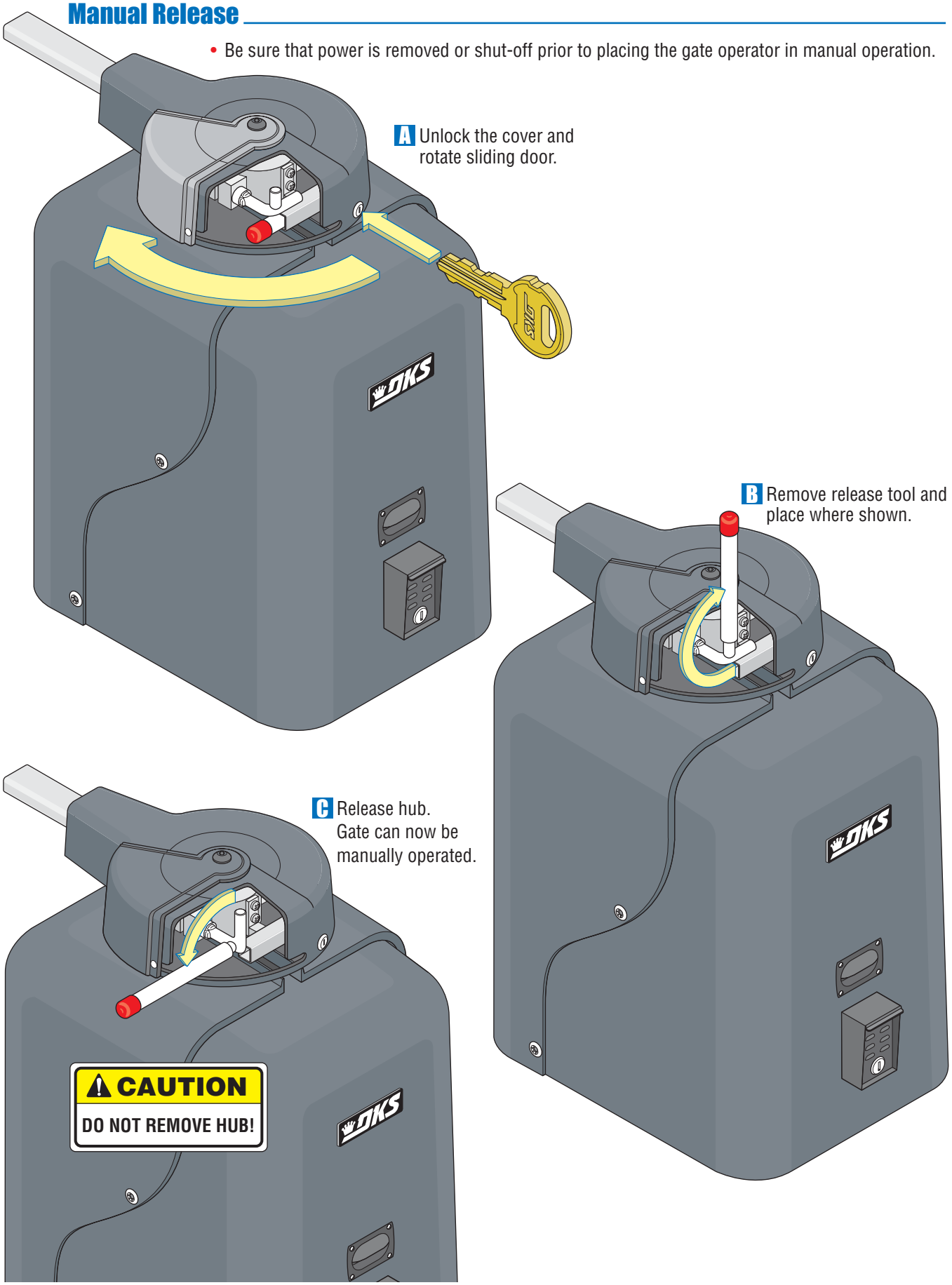

SECTION 5 - OPTIONAL CONVENIENCE OPEN ADJUSTMENTS

The optional convenience open system installed in your vehicular gate operator is designed as a convenience enhancement only. It is not designed or intended to provide continuous gate operation during a power outage. Its sole purpose is to provide a method to open the vehicular gate to allow unimpeded traffic flow when the gate and access control system is without power. If your access control system requires 100% power backup and continuous operation when primary (AC) power has failed, a power inverter / backup system, such as DoorKing's Model 2000, is required.

- The convenience open system cannot provide continuous gate operation during a power outage.
- ***This system cycles the gate to the open position one time only.***
- The convenience open system requires testing on a monthly basis to insure the batteries are fully charged and that the system is operational.
- The convenience open system uses two 12-volt, 3.0 amp-hour gel-cell batteries. These batteries should be replaced every two years on average, or sooner if required.
- Batteries are affected by temperature. Cold temperatures will reduce the effectiveness of the batteries. High temperatures will result in a shortened battery life.
- Batteries are not covered under warranty.

5.1 Operating Mode

This convenience open system consist of a control board (2340-010), motor and power supply (batteries) providing a completely redundant drive system to open the gate should a power outage occur. This system is not designed to maintain continuous gate operation; rather it provides a convenient method to open a gate **ONCE** during adverse conditions. If continuous gate and access control system operation is required, refer to the DoorKing Model 2000 Inverter / Backup Power System.

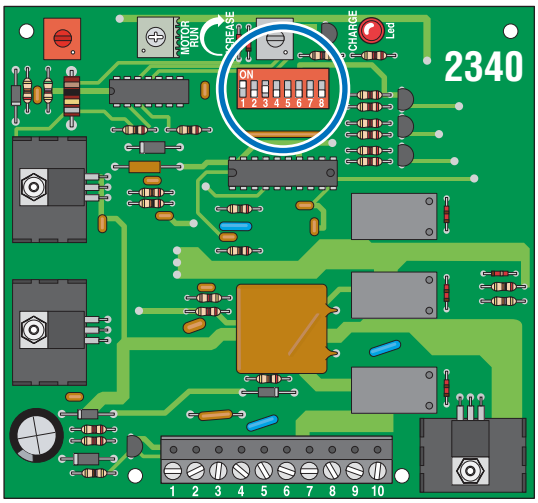

Automatic Open after loss of AC Power

Turn switch 1 **ON** and the system will automatically open the gate approximately 3 seconds after loss of AC power. Automatic mode is **always** used for for gates in general access applications such as gated communities, apartment complexes, etc.
Switch 1 **OFF** is not used.

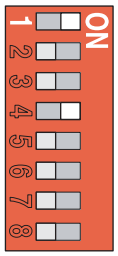

DIP-Switches

Restart Options once AC Power is restored

Once AC power is restored, the system's control board can be set to "**automatically re-key**" the gate operator (switch 3 **ON**) to establish normal operation, or can be set to require a "**manual input**" (switch 3 **OFF**) before the operator resumes normal operation.

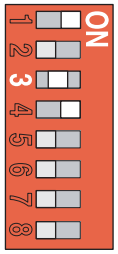

DIP-Switches

5.2 DC System Description

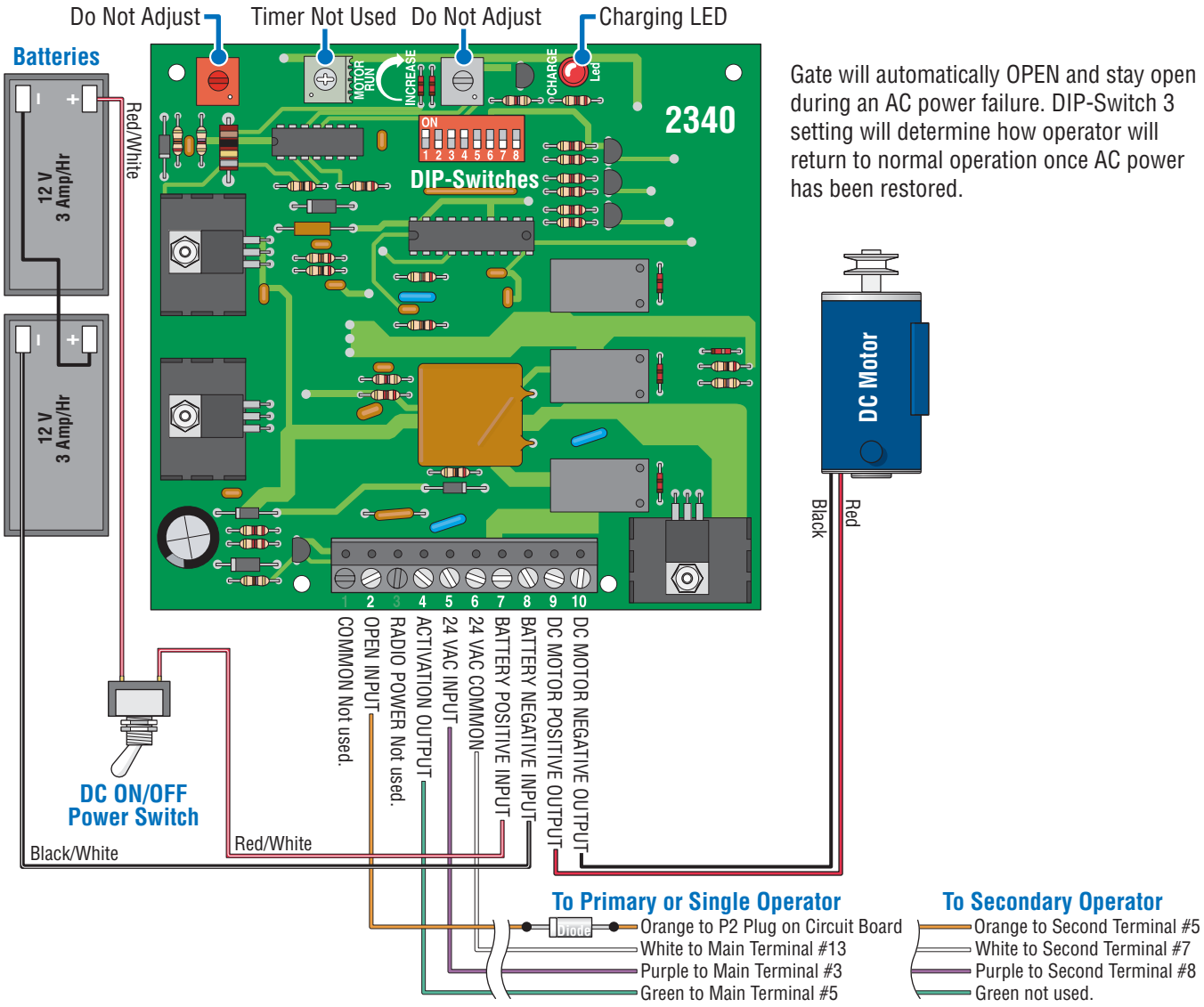

Gate will automatically OPEN and stay open during an AC power failure. DIP-Switch 3 setting will determine how operator will return to normal operation once AC power has been restored.

5.3 DIP-Switch Settings

Switch	Function	Setting	Description
1	Operation	OFF	Not Used
		ON	Gate will automatically open when a power outage occurs.
2	Changes Open Direction	**OFF**	Set so that the gate cycles to the open direction upon loss of AC power.
3	Automatic Power-up Activation	OFF	When AC power is restored, an input (push button, loop, radio receiver, etc.) is required to return the gate to normal operation.
		ON	When AC power is restored, a 1-second pulse is sent to the gate operator input to automatically restore normal operation.
4	Operator Type	**ON**	Must be in the **ON** position.
5	Not Used	**OFF**	
6	Not Used	**OFF**	
7	Not Used	**OFF**	
8	Not Used	**OFF**	

SECTION 6 - MAINTENANCE AND TROUBLESHOOTING

Inspection and service of this gate operator by a qualified technician should be performed anytime a malfunction is observed or suspected. High cycle usage may require more frequent service checks.

6.1 Maintenance

When servicing the gate operator, always check any secondary (external) reversing devices (loops, photo eyes, etc.) for proper operation. If external reversing devices cannot be made operable, do not place this operator in service until the malfunction can be identified and corrected.

Always check the inherent reversing system when performing any maintenance. If the inherent reversing system cannot be made operable, remove this operator from service until the cause of the malfunction is identified and corrected. Keeping this operator in service when the inherent reversing system is malfunctioning creates a hazard for persons which can result in serious injury or death should they become entrapped in the gate.

When servicing this gate operator, always turn power **OFF!!**

If gearbox requires oil, use only SYNTHETIC SHC-629 Oil. Do not completely fill gearbox with oil. Gearbox should be half full only. Do not exceed this level.

Operator Component	Maintenance	Monthly Interval		
		3	6	12
Alarm	Activate the primary (inherent) reverse system by blocking the gate with a solid object. When the gate reverses, block the gate in the opposite direction prior to the limit being reached. The entrapment alarm should activate. Press the reset button to silence the alarm.	✓		
Arms	Check set screws and nuts. Check bushings for wear.		✓	
Batteries	If operator is equipped with optional DC open system, check the batteries for any leakage or loose connections. Batteries should be replaced every two years.	✓		
DC Open System	If operator is equipped with optional DC open system, check to be sure the system opens the gate upon loss of AC power.	✓		
Drive Belt	Check for alignment, tightness and wear.		✓	
Fire Dept.	Check emergency vehicle access device for proper operation.	✓		
Gate	Inspect for damage. Check gate hinges for wear and grease if necessary.		✓	
Primary Reverse System	Check that the gate reverses on contact with an object in both the opening and closing cycles. Adjust the reversing sensor if necessary.	✓		
Loop(s)	Check vehicular reverse and shadow loops for proper operation.	✓		
Release	Check manual release for proper operation.	✓		
Secondary Reverse Device	Check secondary (external) reverse device(s) stop or reverse the gate when activated.	✓		
Complete System	Complete check of gate and gate operating system.			✓

6.2 Troubleshooting

Have a good VOM meter to check voltages and continuity. A Meg-Ohm meter capable of checking up to 500 meg-ohms of resistance is necessary to properly check the integrity of the ground loops. When a malfunction occurs, isolate the problem to one of three areas: 1) the operator, 2) the loop system, 3) the keying devices. **Use caution when checking high voltage areas: terminals 17 through 20, the motor capacitor and the motor.**

1. Check the input indicator LEDs. They should only come ON when a keying device (card reader, push button, etc.) is activated. If any of the input LEDs are ON continuously, this will cause the gate operator to hold open. Disconnect the keying devices one at a time until the LED goes OFF.

2. Check any external secondary entrapment protection devices. Any short or malfunction in these devices can cause the gate operator to stop or to hold open.

3. A malfunction in a loop or loop detector can cause the gate operator to hold open, or to not detect a vehicle when it is present over the loop. The LEDs next to the loop detector ports on the operator circuit board will light only when the loop has detected an object above it. If the LEDs stays on after the object has gone, then the loop detector has malfunctioned. Pull the loop detector circuit boards from the loop ports on the operator circuit board. If the malfunction persists, the problem is not with the loop system. For more information on trouble shooting loops and loop detectors, refer to your loop detector instruction sheet and to the DoorKing Loop and Loop Detector Information Manual.

4. Check to be sure that there are no shorted or open control wires from the keying devices to the gate operator. If a keying device fails to open the gate, momentarily jumper across terminals 1 and 2 (or 1 and 5) on the gate operator circuit board. If the gate operator starts, this indicates that a problem exist with the keying device and is not with the gate operator.

5. Check the high voltage supply. A voltage drop on the supply line (usually caused by using too small supply voltage wires) will cause the operator to malfunction. Refer to the wire size chart in section 2.1.

Symptom	Possible Solution(s)
Operator will not run. Power LED is OFF.	• Check that power to the operator is turned ON. • Transformer may be overheated. Turn power off and allow board to cool for several minutes then retest. Check for low 115 VAC power and low voltage shorts. • Check for 115 VAC at terminals 19 and 20. If voltage measures OK, check the terminal strip or replace the circuit board.
Operator will not run. Power LED is ON.	• Push test button or momentarily jumper terminal 1 to terminal 2 (or 1 to 5). If the input LED does not come ON, check the terminal strip or replace the circuit board. If LED does come ON, proceed to next steps. • Remove circuit board. With power ON, momentarily jumper terminal 19 to terminal 18 with a 14 AWG insulated jumper wire. CAUTION – HIGH VOLTAGE. The motor should run. • With power ON, momentarily jumper terminal 19 to terminal 17 with a 14 AWG insulated jumper wire. CAUTION – HIGH VOLTAGE. The motor should run in the opposite direction of the above step. • If the motor runs in both steps above, replace the control board. If the motor does not run, or runs in only one direction, problem can be a bad motor, motor capacitor, wire connections from the control board to the motor or a bad control board.
Secondary operator motor will not run.	• Check that SW-1, switch 6 is ON. • Remove circuit board. Momentarily jumper terminal 19 to the primary/secondary connection terminal block terminal 1, then to terminal 2 with a 14 AWG insulated jumper wire. CAUTION – HIGH VOLTAGE. The secondary motor should run one way, then the other way as power is applied to each terminal. • If the secondary motor runs in both directions, replace the control board. If secondary motor does not run, or runs in only one direction, problem can be in the wiring from the primary to secondary operator, bad secondary motor or motor capacitor.

Symptom	Possible Solution(s)
Gate will not reverse when an obstruction is encountered.	• Check ERD setting. • Make sure operator hub does not slip when gate encounters an obstruction.
Gate opens a short distance, then stops and reverses.	• Check the reversing sensitivity. • Disconnect the gate from the gate operator and check that the gate swings freely without any binding. • Replace the circuit board.
Gate opens but will not close.	• Check the input LEDs. Any ON will hold the gate open and indicates a problem with a keying device. • Check the secondary safety devices. Any activated will hold the gate open and indicates a problem with the safety device. • Check the loop detectors. Any activated can hold the gate open and indicates a problem with the loop detector or ground loop. • Operator may be in a "soft shutdown." Activate any keying device to determine if operator returns to normal operation. • If automatic close is desired, be sure SW-1, switch 4 is ON. • Check motor as described on previous page.
Gate closes but will not open.	• Operator may be in a "soft shutdown." Check input LEDs. If any are ON, momentarily disconnect, then re-connect the wire going to the respective terminal. Operator should open. • Check to be sure that the operator is running in the proper direction. Turn power OFF, and then back ON. Activate a keying device. Operator should run in the open direction. If operator runs in the close direction, turn power OFF and change direction switch SW-1, switches 1 and/or 2. Go to above section if operator now opens but will not close. • Be sure that the respective LED on the control board lights when the keying device connected to the respective terminal is activated. If LED does not light, momentarily place a jumper wire from terminal 1 to the input terminal being checked. If LED lights and gate opens, problem is with the keying device. If LED does not light, replace control board. • Check motor as described on previous page.
Gate starts to close, then reverses to open.	• Check that the reverse sensitivity is properly adjusted. • Disconnect the gate from the operator and check that the gate operates freely without any binding. • Check the loop detector LEDs and input LEDs. Any that flash ON will cause the gate to reverse. • If a shadow loop is used, check for proper wiring. A mis-wired shadow loop detector will cause the gate to reverse. • Replace the circuit board.
Gate closes and then re-opens.	• Check for any input or loop detector LEDs that are ON. • Check that the operator is running in the proper direction (see "gate closes but will not open" above).
Alarm sounds for 5 minutes and then beeps once every 5 seconds. Operator will not run.	• Operator is in a "hard shutdown" condition. Reset switch must be activated to return operator to normal operation.
DC open system will not open gate upon AC power outage.	• Check if the DC system is set to open gate automatically or requires an input to open. • Check that the DC system power switch is in the ON position. • Check the batteries for proper voltage. Replace if necessary. • Replace the DC system circuit board.

6.3 Built-in Diagnostics

This gate operator is designed with built-in diagnostics that will alert you to potential or existing problems that the microprocessor has detected. Specific fault conditions are checked and the operator will signal that a fault exist through the built-in alarm.

Constant tone is heard when power is applied: This indicates that the limit switch wire harness is not connected to the circuit board. In this condition, the operator will not run and the tone will continue until the fault is corrected. Check to be sure that the limit switch plug is properly inserted into P2.

Constant tone is heard: This indicates that the operator is in a hard shutdown condition. The tone will continue to sound for five minutes, and then will beep once every five seconds. The operator-reset button must be pressed or power must be removed and then reapplied to return the operator to normal operation.

Short tone is heard every five seconds: This indicates that the operator has been in a hard shutdown condition in excess of five minutes. This will continue until the operator-reset button is pressed or until power is removed from the operator.

Operator runs for 1 second and stops, two short tones are heard: This indicates that there may be a fault with the current sensor circuit. Check that the black current sensor wire has been passed through the hole in the current sensor donut with the correct number of loops (1/2 HP motor - 2 loops, 1 HP motor - 1 loop).

6.4 Accessory Items

The following accessory items are available for the model 6500 swing gate operator.

Contact Sensors - For use as a secondary entrapment protection device. Miller Edge, Inc., MGO20, MGR20, MGS20
Photo Cell - Non-contact (photo-cells) sensors for use as a secondary entrapment protection device.
MMTC, Inc. Model IR55 P/N 8080-010
MMTC, Inc. Model 60-278 P/N 8080-011
Carlo Gavazzi Type PMP12 P/N 8080-030
Carlo Gavazzi Type PMT P/N 8080-031
Loop Detector - Detectors plug directly into ports on circuit board simplifying wiring.
P/N 9410-010 - Single channel detector
P/N 9409-010 – Two-channel detector
Magnetic Lock - Magnetic Gate Lock Kit provides an excellent means to secure swing gates and is a fail-safe device allowing emergency vehicle access upon power outage.
P/N 1216-080 and P/N 1216-081
Remote Reset - Provides a remote station to reset an operator in a hard shutdown condition. Must be mounted in line-of-site of the gate and operator. Includes visual and audible signals.
P/N 1404-080.
Control Station - Interior station mounts into single-gang electrical box. Provides open and hold open manual operation of the gate. P/N 1200-017.
Interconnect Cable - Interconnect wire cable contains all the necessary wires to interconnect primary / secondary operators.
Cable length 30 feet. P/N 2600-755
Cable length 40 feet. P/N 2600-756
Cable length 50 feet. P/N 2600-757
Time Clock - 7 day and 365 day time clocks can be used to automatically open gate at pre-set time and days. Compact clock fits inside the operator.
P/N 2600-791 - 7 day clock
P/N 2600-795 - 365 day clock
Torsion Rods - Torsion rod assembly is used on uphill swing gates for counter balance.
P/N 1203-084
Hinges - Heavy-duty ball bearing hinges provide easy swing gate operation.
P/N 1200-009, P/N 1200-019, P/N 1200-039.
Surge Devices - High and low voltage surge suppressors help prevent circuit board failure caused by lightning strikes and power surges.
P/N 1876-010 - High Voltage
P/N 1878-010 - Low Voltage
Gate Scale - Use to test torque required to move gate. P/N 2600-225
Speed Bumps - Prefabricated six-foot speed bump reduces traffic speed through gate system. P/N 1610-150

Model 6500 1/2 HP 115 VAC

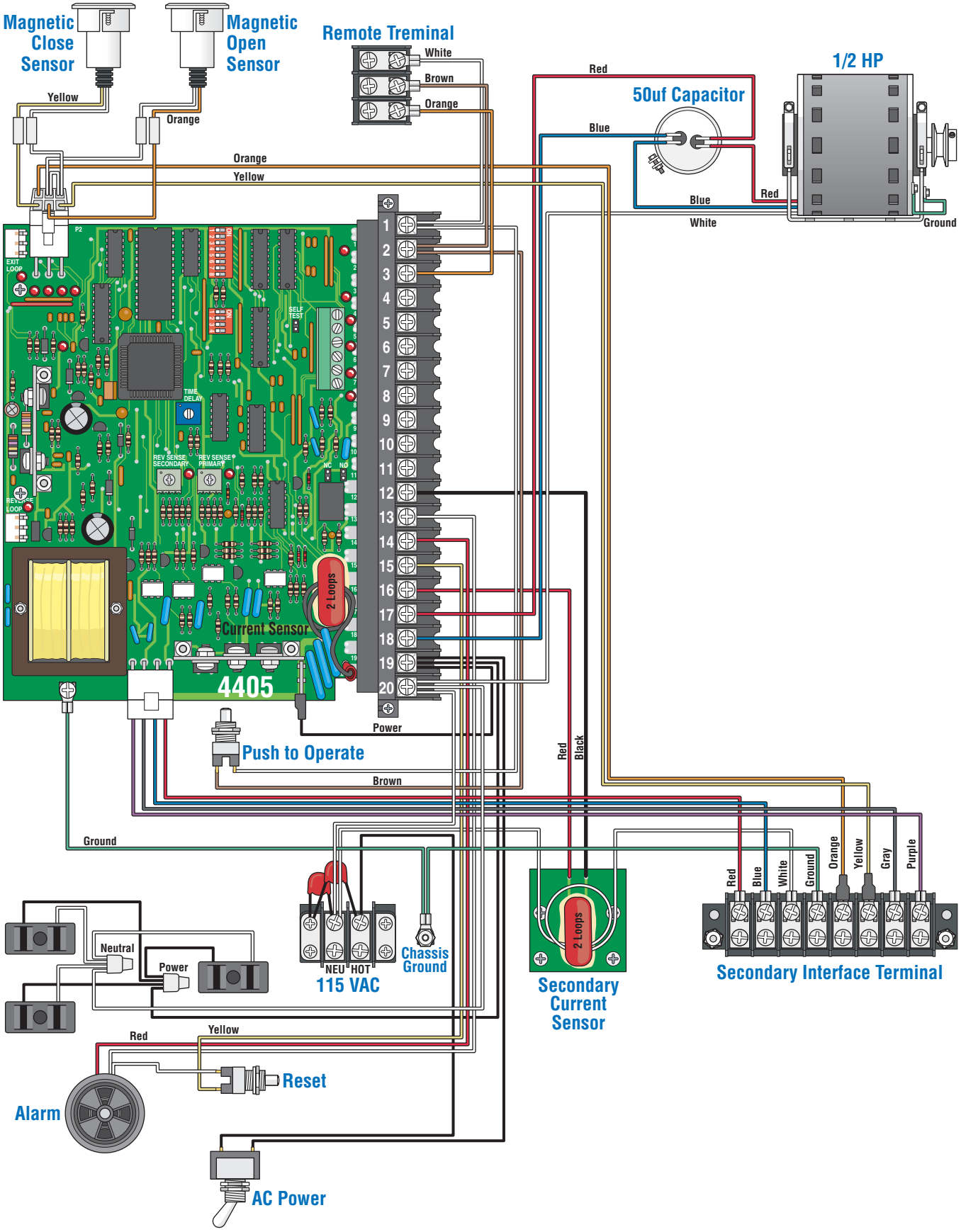

Model 6500 1/2 HP 115 VAC / Convenience Open

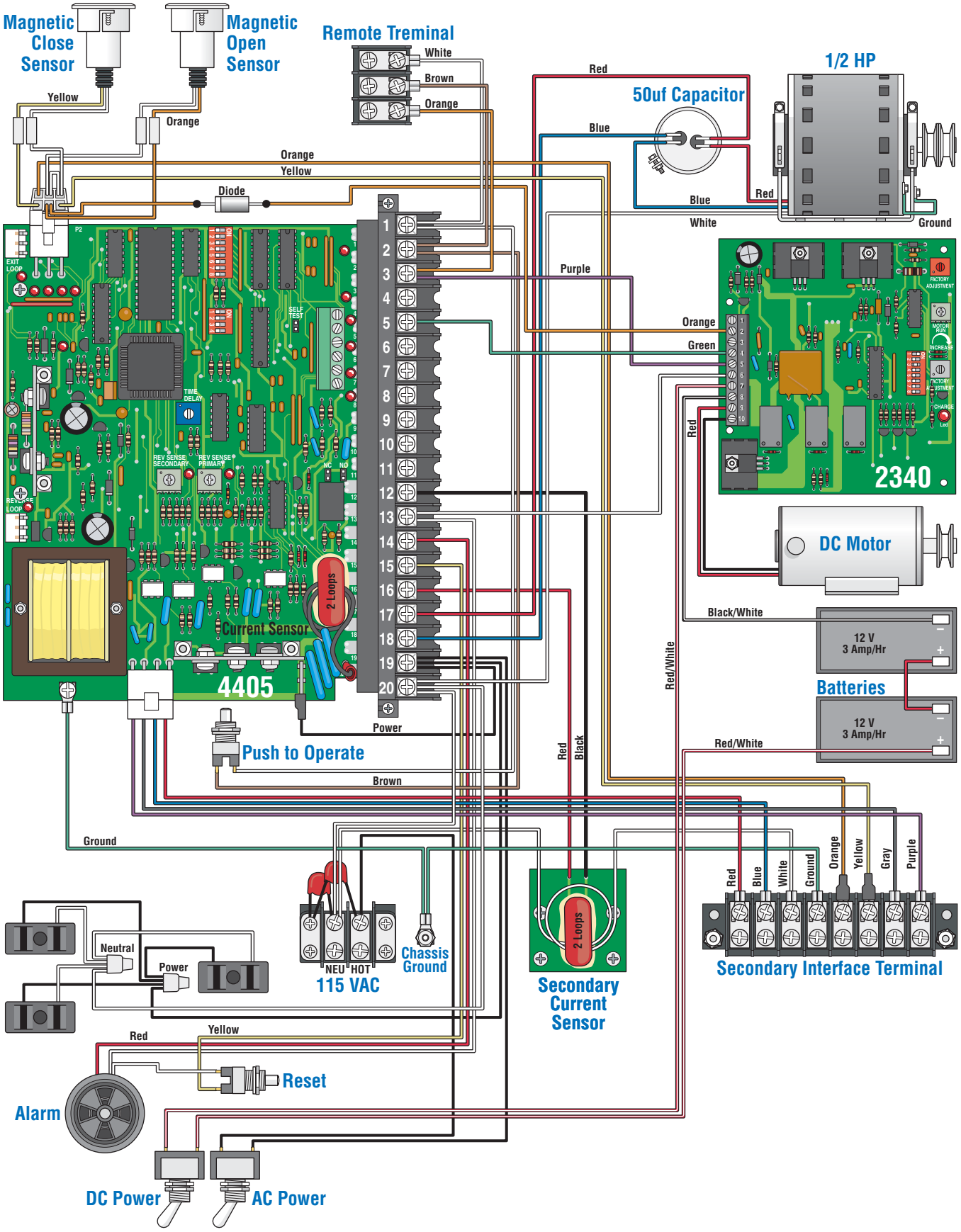

Model 6500 1/2 HP 230 / 460 VAC

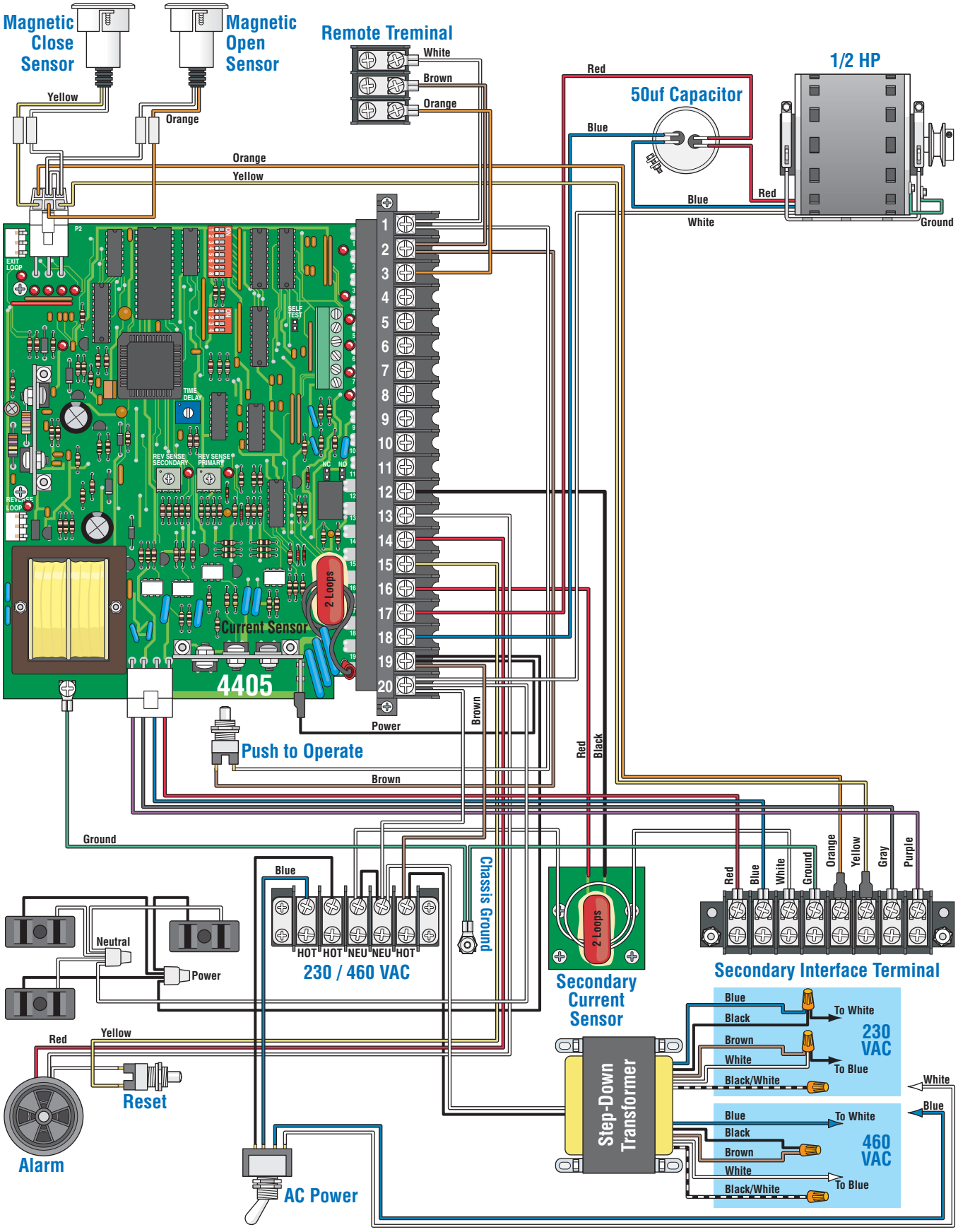

Model 6500 1/2 HP 230 / 460 VAC / Convenience Open

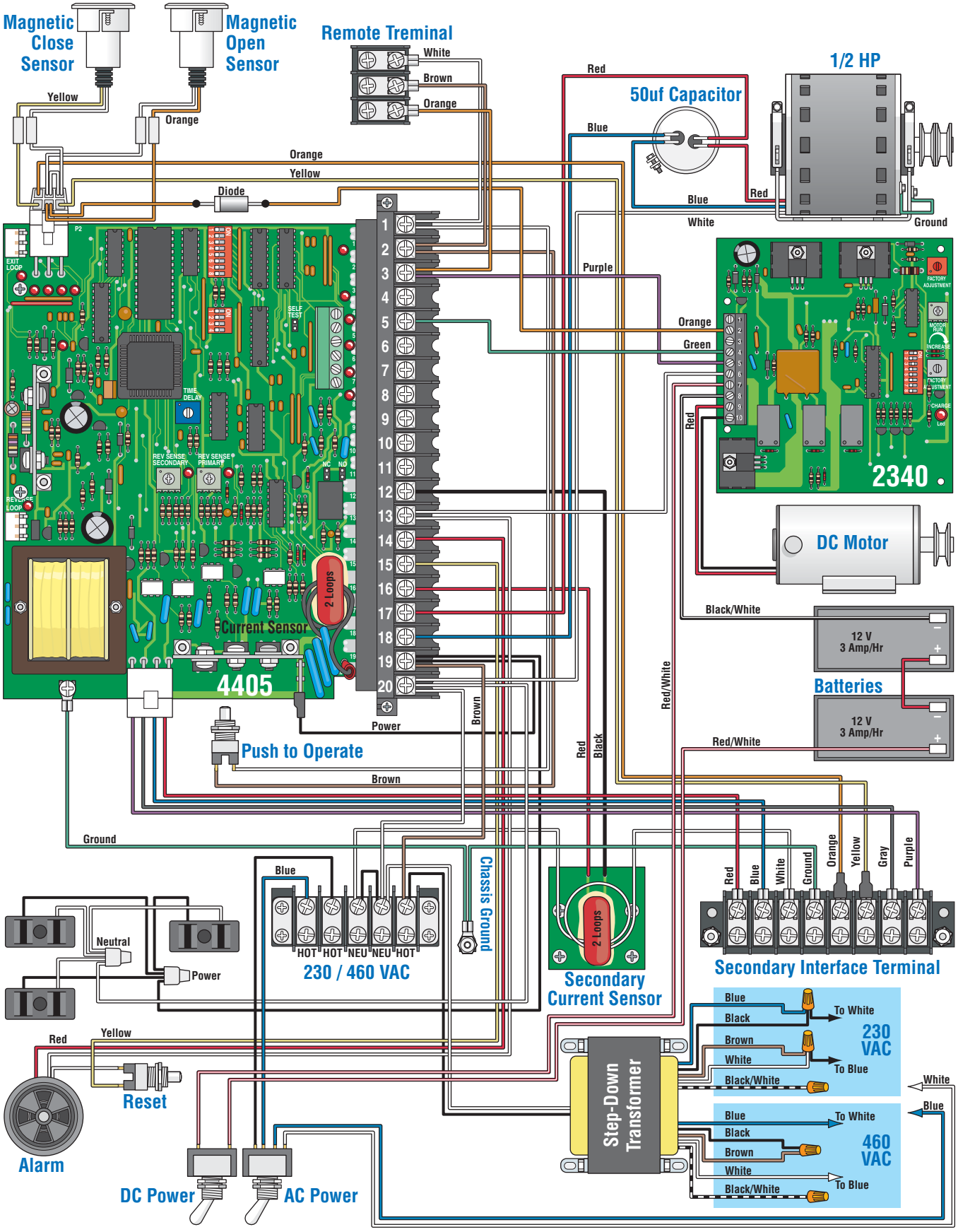

Model 6500 1 HP 115 VAC

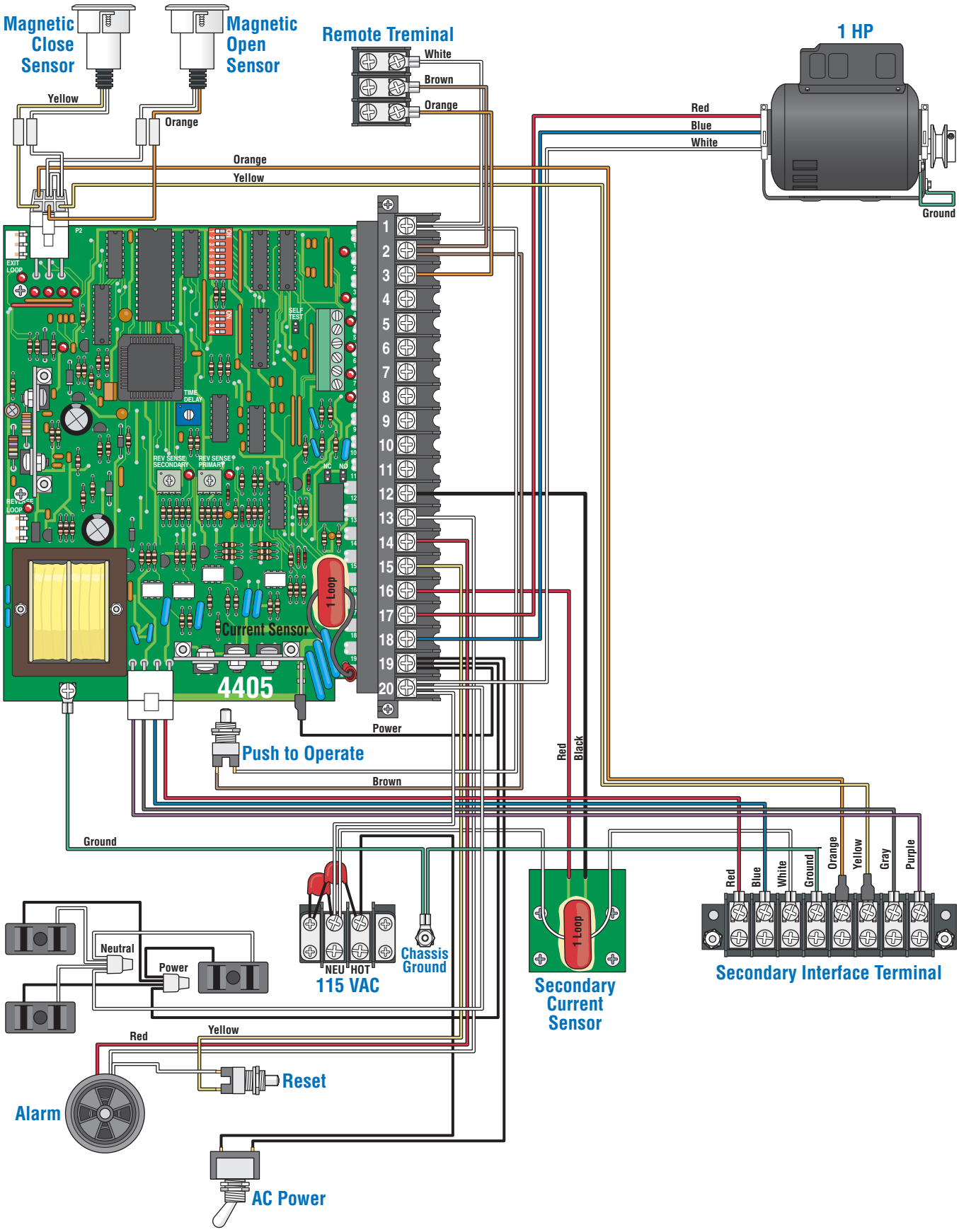

Model 6500 1 HP 115 VAC / Convenience Open

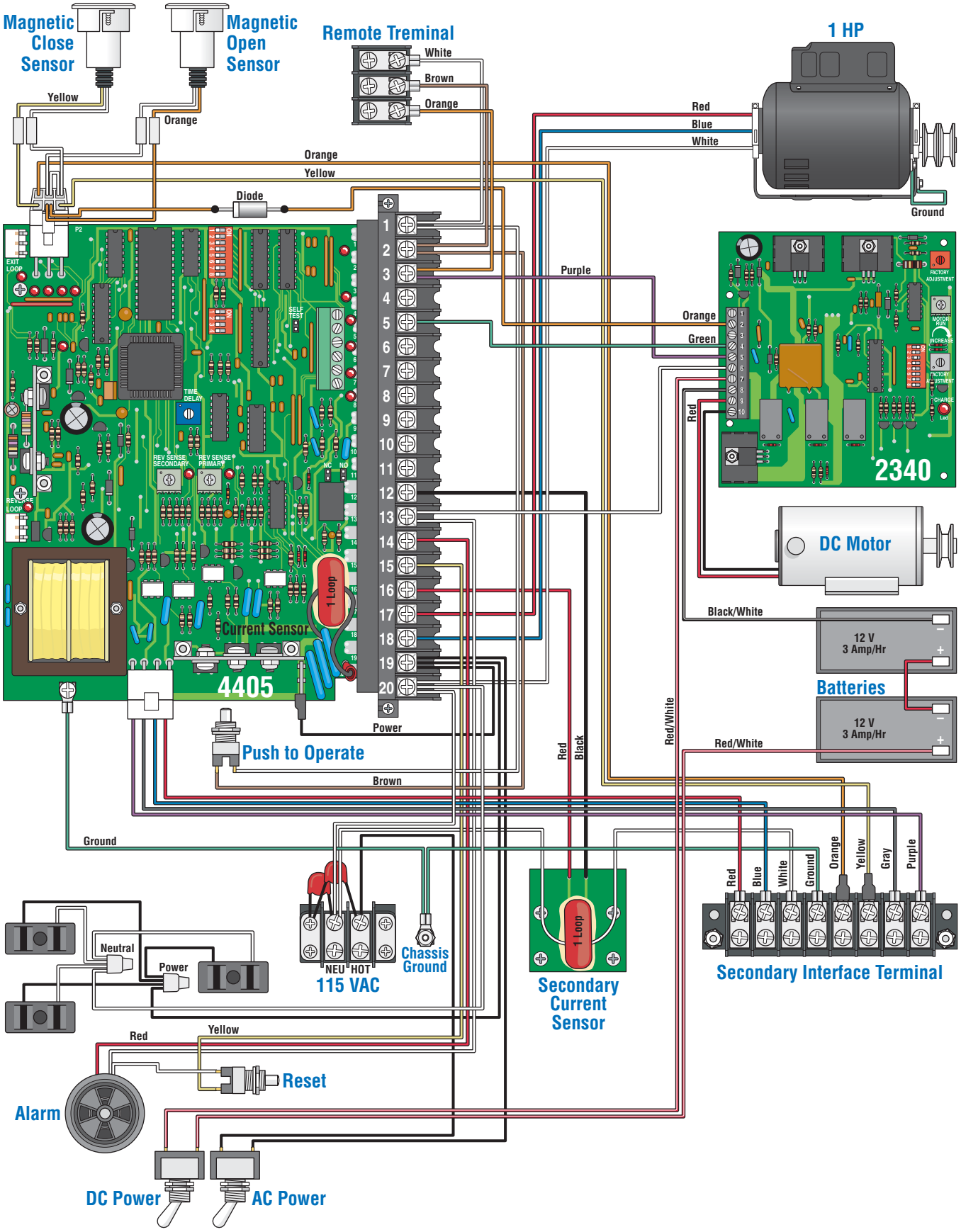

Model 6500 1 HP 230 / 460 VAC

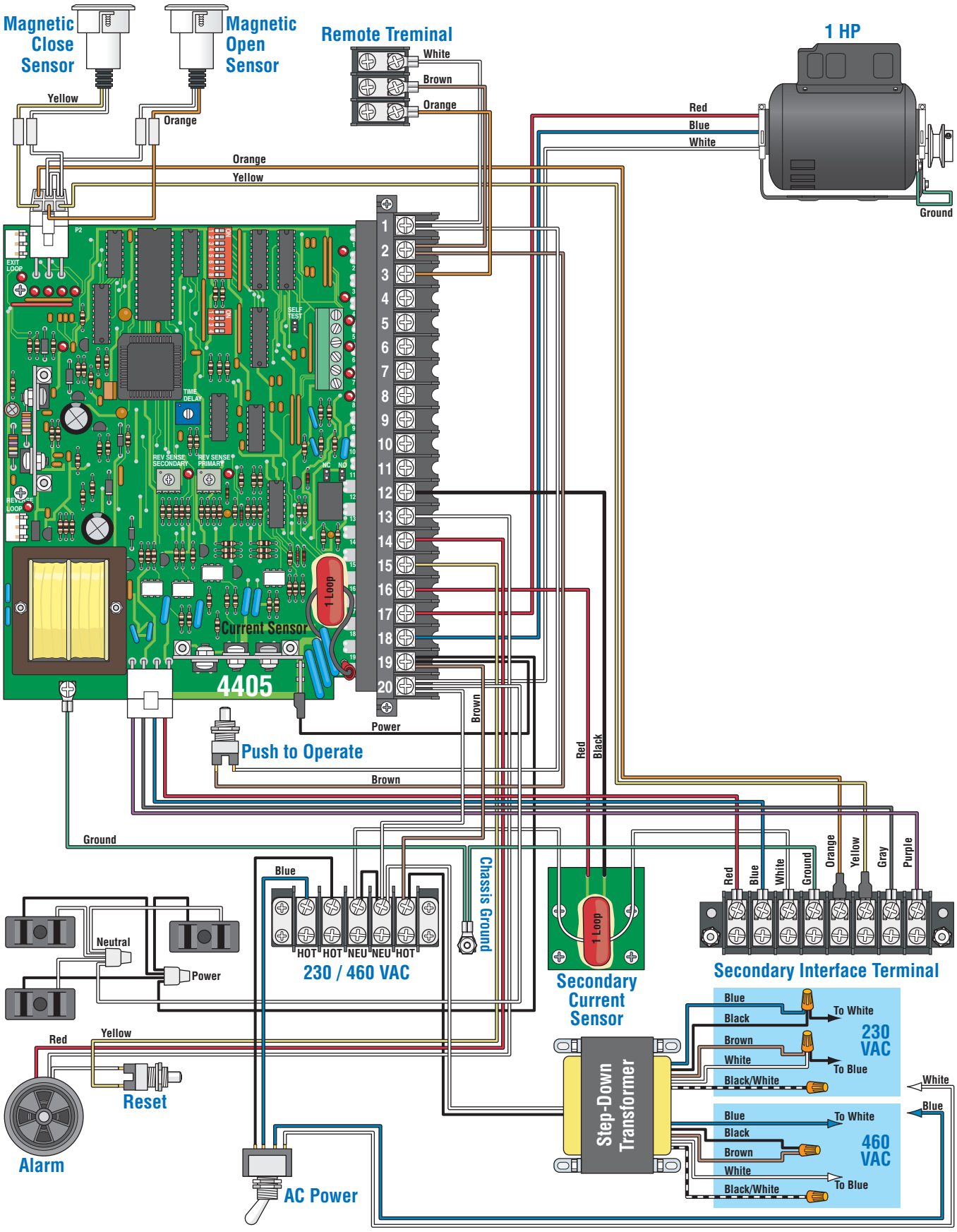

Model 6500 1 HP 230 / 460 VAC / Convenience Open

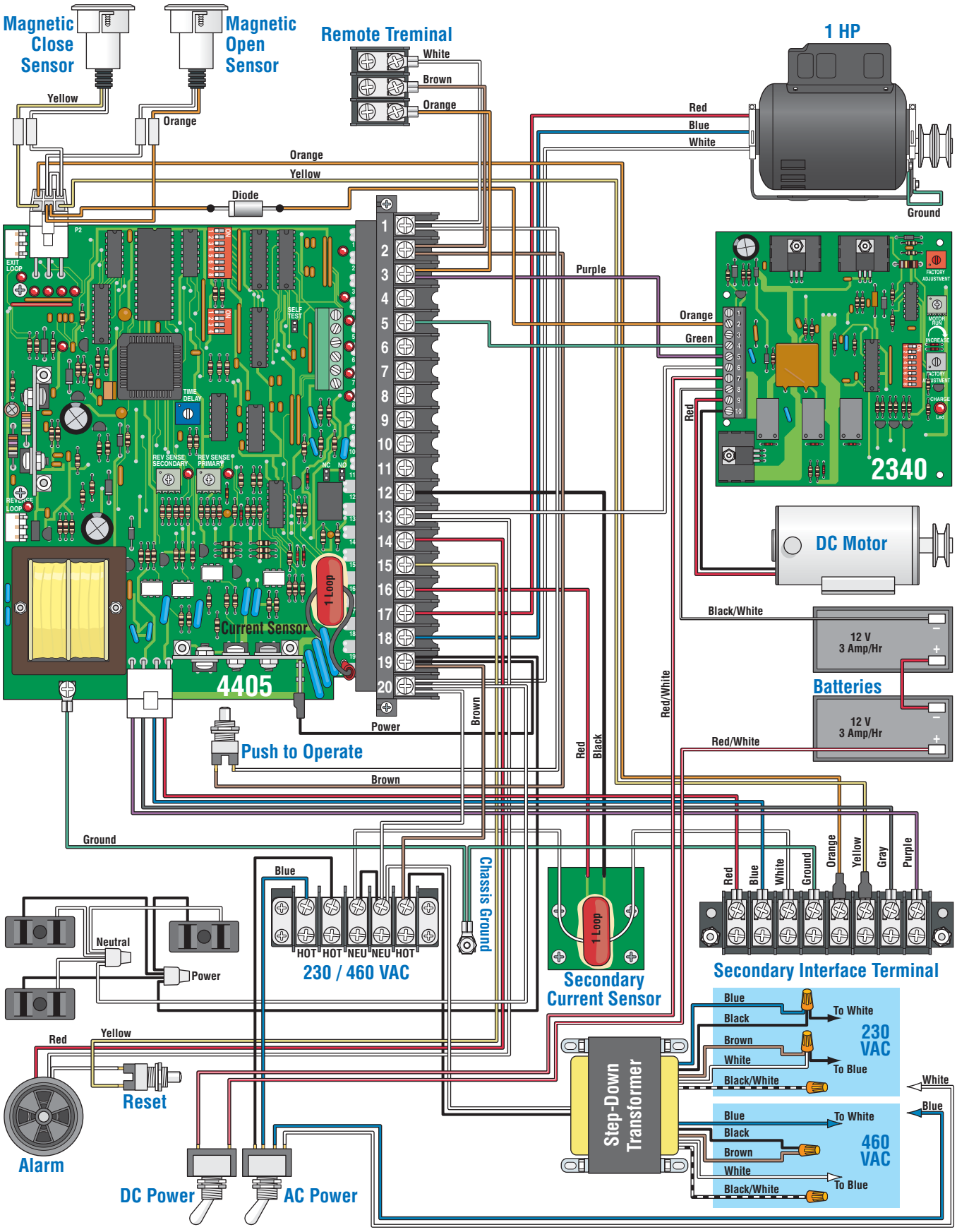

Model 6500 1/2 HP Secondary Operator

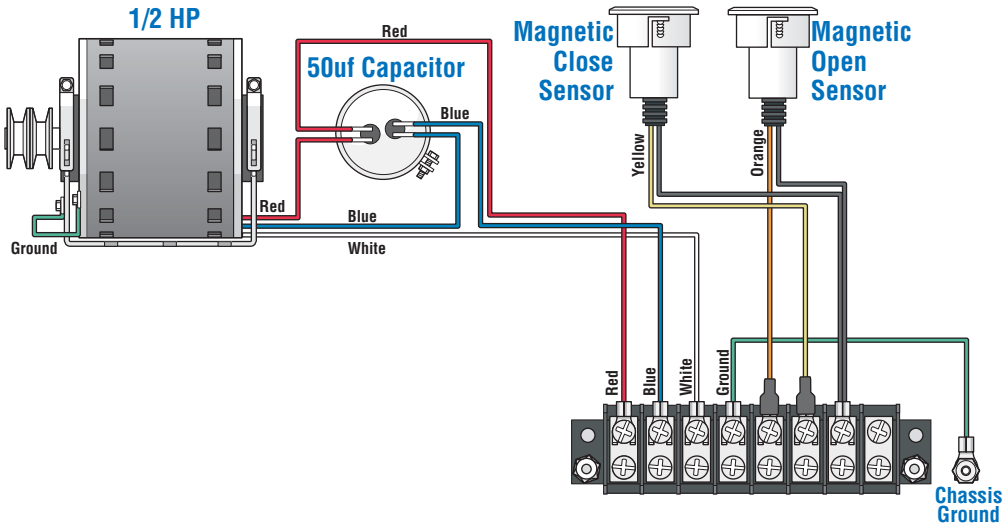

Model 6500 1/2 HP Secondary Operator/Convenience Open

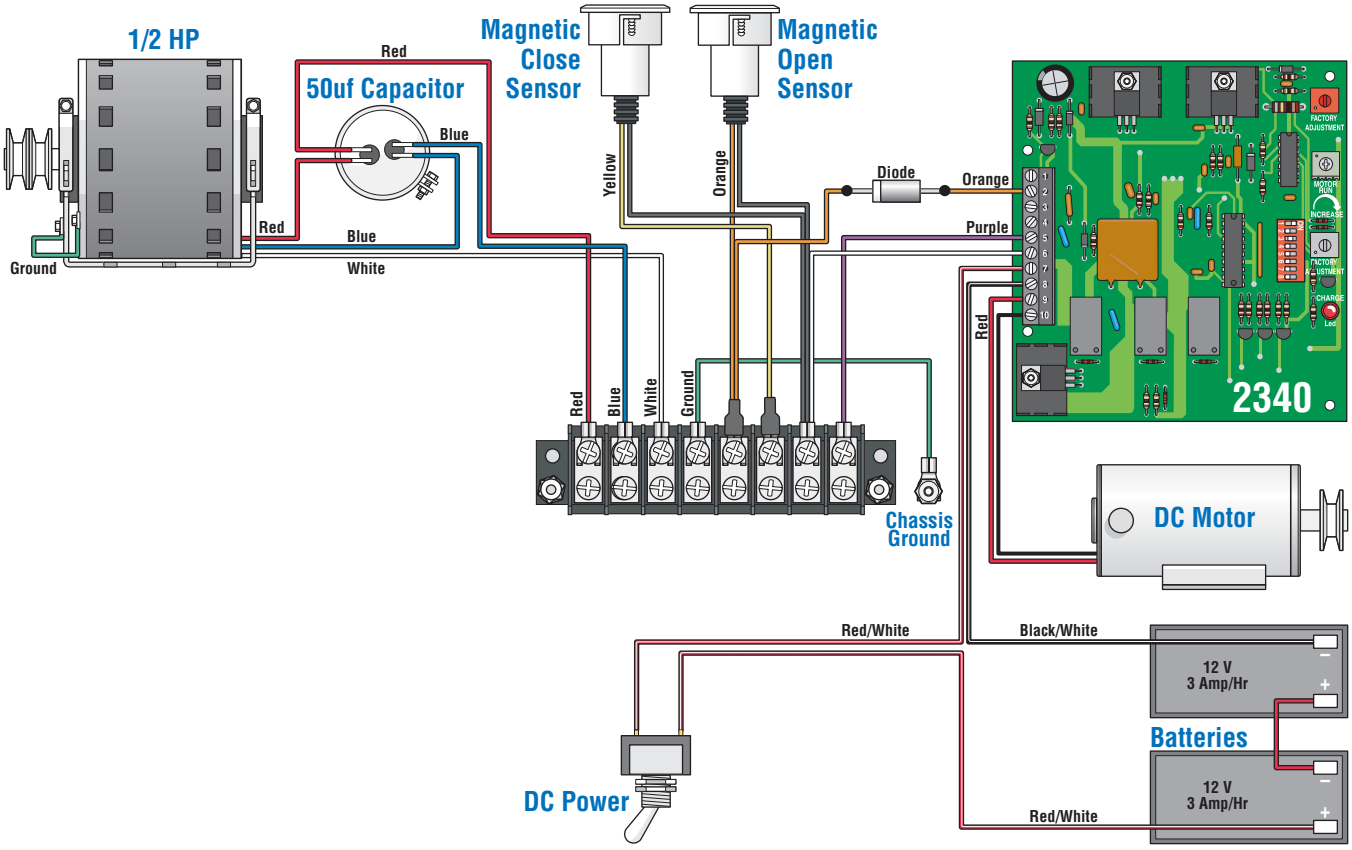

Model 6500 1 HP Secondary Operator

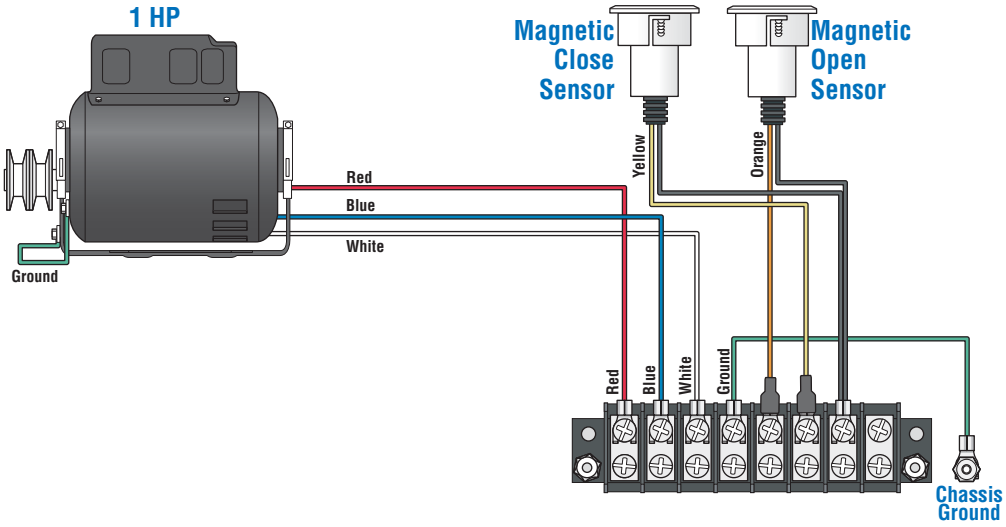

Model 6500 1 HP Secondary Operator/Convenience Open

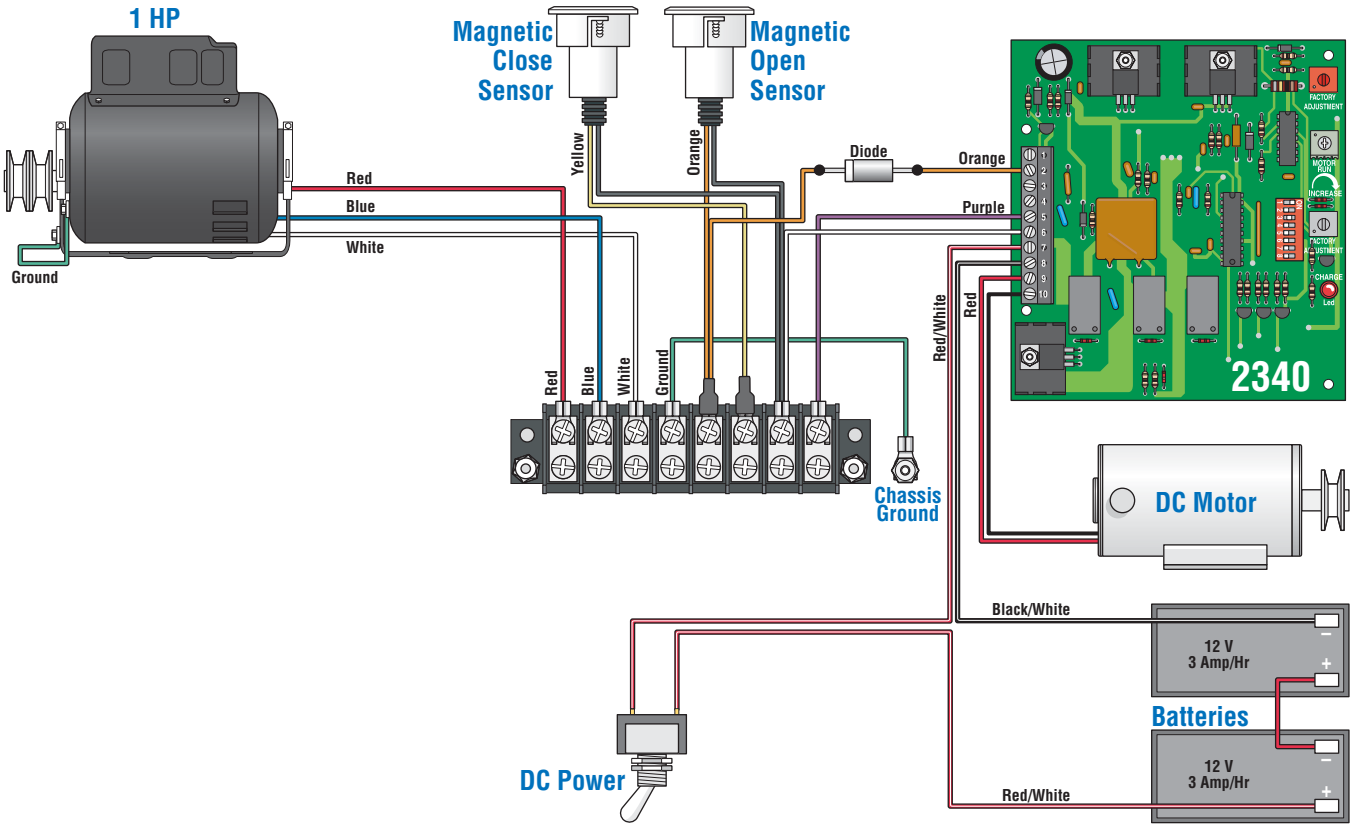

Owner's Manual

Series 6500

Vehicular Swing Gate Operator

DOORKING®, INC.

DoorKing, Inc.
120 Glasgow Avenue
Inglewood, California 90301
U.S.A.

Phone: 310-645-0023
Fax: 310-641-1586

6500-065-I-6-08

www.doorking.com