Installation/Owner's Manual

Series 6300
Vehicular Swing Gate Operator

Use this manual for circuit board 4502-010 Revision K or higher.

6300-065-A-12-12

For operators manufactured July 2011and later.

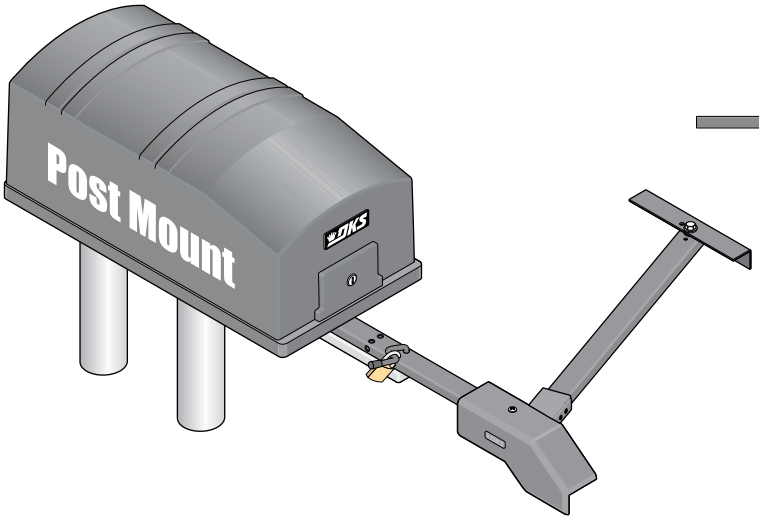

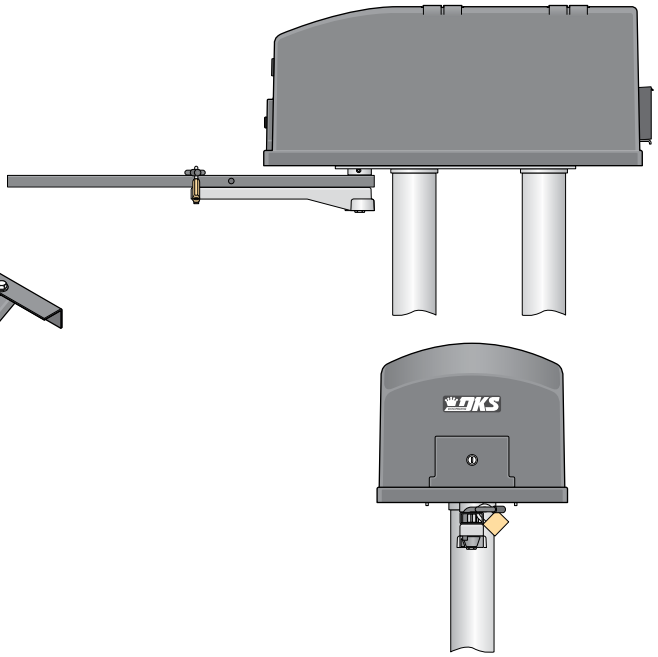

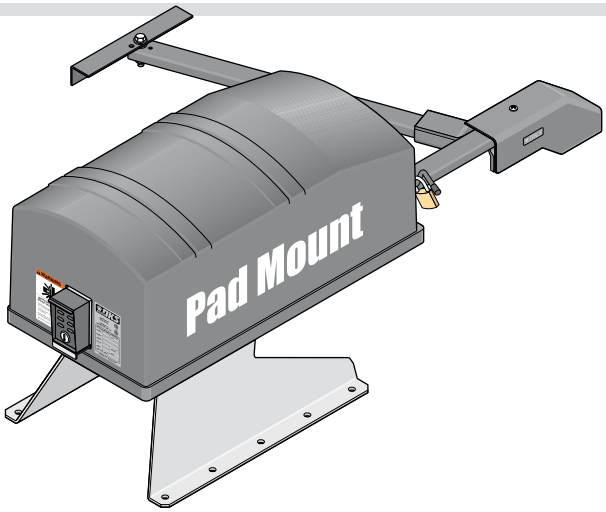

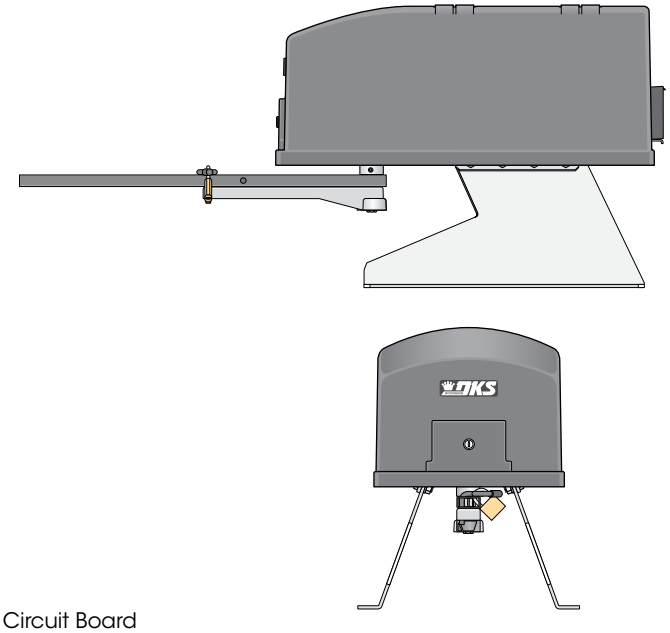

Date Installed: _____

Installer/Company Name: _____

_____

Phone Number: _____

Circuit Board
Serial Number
and Revision Letter: _____

Leave Manual with Owner

Copyright 2012 DoorKing, Inc. All rights reserved.

Intertek

UL 325 Compliant

DOORKING®, INC.

SPECIFICATIONS

Use this manual for the Model 6300 operator with circuit board 4502-010 Rev K or higher ONLY.
For operators manufactured July 2011 and later.

Class of Operation Model 6300 - UL325 Class I, II, III, IV
Type of Gate Vehicular Swing Gates Only
Entrapment Protection **Primary** - Inherent adjustable clutch (Type C)
Secondary - Inherent entrapment protection system (Type A) and provision for connection of a non-contact sensor (Type B1)

Model #	Convenience Open	Type Operator	Horsepower - Volts	Amp	Phase (Ø)	Max Gate Weight	Max Gate Length	Cycles Per Hour	Speed 90°
6300-080	No	Primary	1/2 HP - 115 VAC	5.4	1Ø	600 Lbs.	18 Ft.	60	15-18 Sec
6300-081	No	Secondary	1/2 HP - 115 VAC	5.4	1Ø	600 Lbs.	18 Ft.	60	15-18 Sec
6300-082	Yes	Primary	1/2 HP - 115 VAC	5.4	1Ø	600 Lbs.	18 Ft.	60	15-18 Sec
6300-083	Yes	Secondary	1/2 HP - 115 VAC	5.4	1Ø	600 Lbs.	18 Ft.	60	15-18 Sec
6300-084	No	Primary	1 HP - 115 VAC	9.7	1Ø	800 Lbs.	22 Ft.	60	15-18 Sec
6300-085	No	Secondary	1 HP - 115 VAC	9.7	1Ø	800 Lbs.	22 Ft.	60	15-18 Sec
6300-086	Yes	Primary	1 HP - 115 VAC	9.7	1Ø	800 Lbs.	22 Ft.	60	15-18 Sec
6300-087	Yes	Secondary	1 HP - 115 VAC	9.7	1Ø	800 Lbs.	22 Ft.	60	15-18 Sec

Note: 208/230/460/575 VAC input voltage can be connected to the operator by installing an "Optional" High Voltage Kit (P/N 2600-266).

Pad Mount Kit

P/N 2600-264

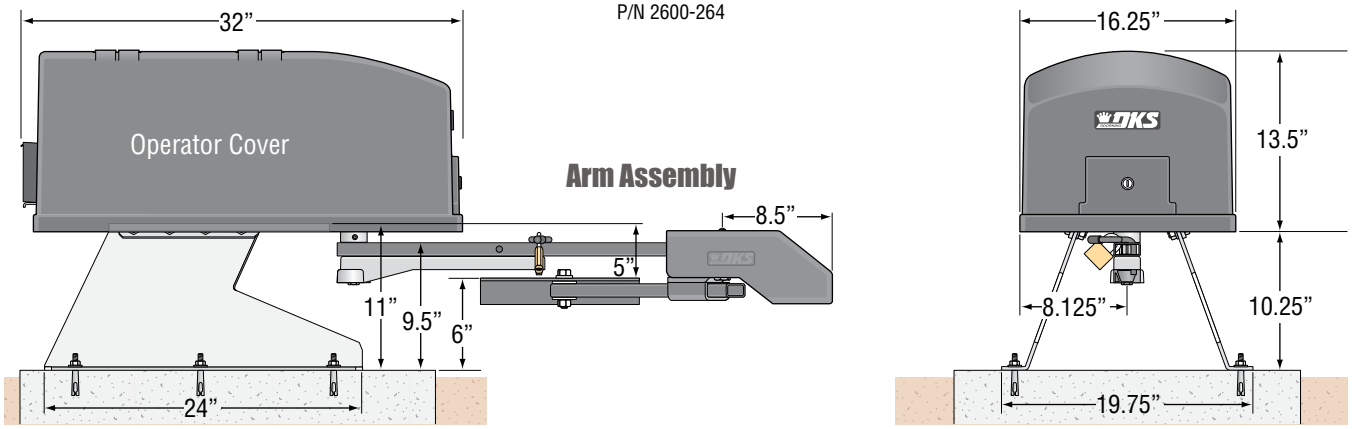

Post Mount Kit

P/N 2600-263

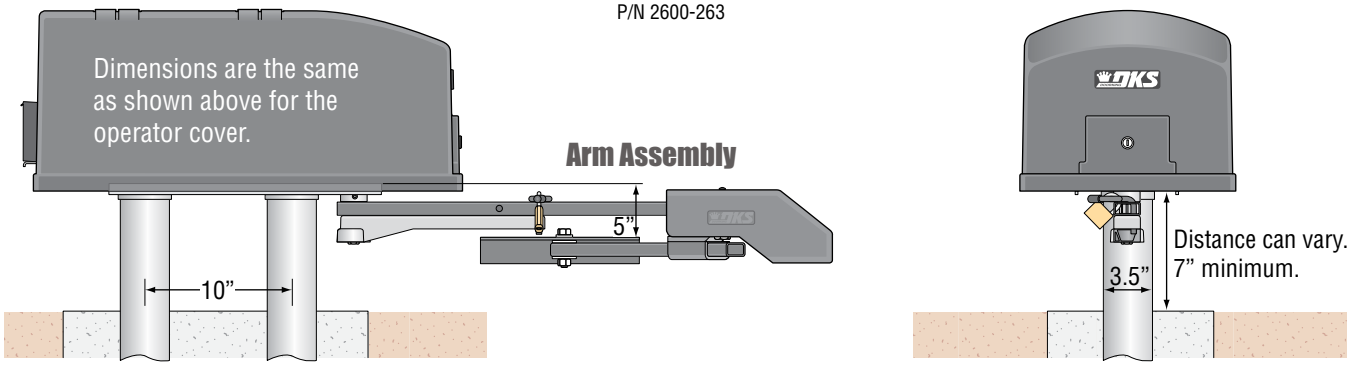

DoorKing, Inc. reserves the right to make changes in the products described in this manual without notice and without obligation of DoorKing, Inc. to notify any persons of any such revisions or changes. Additionally, DoorKing, Inc. makes no representations or warranties with respect to this manual. This manual is copyrighted, all rights reserved. No portion of this manual may be copied, reproduced, translated, or reduced to any electronic medium without prior written consent from DoorKing, Inc.

TABLE OF CONTENTS

SPECIFICATIONS 1

ASTM F2200 Standard for Gate Construction 4
Important Safety Instructions 4
Instructions regarding intended installation: 4
Important Notices 5
UL 325 Entrapment Protection 6
Glossary 7
Swing Gate Requirements 8
Swing Gate Protection 9

SECTION 1 - INSTALLATION 10

1.1 Operator Position 10
1.2 Post Mount or Pad Mount Base Assembly 10
1.3 Underground Conduit Requirements 11-12
1.4 Pad Mount 13
1.5 Post Mount 13
1.6 Arm and Gate Bracket Installation 14
1.7 Manually Adjust the Open and Closed Gate Positions 14
1.8 Installation of Warning Signs 14
1.9 Gates Opening Wider Than 90° 15

SECTION 2 - AC POWER TO OPERATOR(S) 16

2.1 High Voltage Wire Runs 16
2.2 High Voltage Terminal Connection 16
2.3 Bi-Parting Gates Wiring - Dual Gate Operators 17

SECTION 3 - ADJUSTMENTS 18

3.1 4502 Circuit Board Description and Adjustments 18
3.2 DIP-Switch SW 1 Settings 19
3.3 DIP-Switch SW 2 Settings 20
3.4 Automatic Open / Close Limit Adjustment 21
3.5 Clutch Adjustment 22
3.6 Inherent Entrapment Protection System 22

TABLE OF CONTENTS

SECTION 4 - ENTRAPMENT AND SAFETY PROTECTION 23

4.1 Main and Auxiliary Terminal Descriptions 23
4.2 Entrapment and Safety Device Locations 24
4.3 Loop Detector Wiring 25

SECTION 5 - CIRCUIT BOARD WIRING 26

5.1 Main Terminal Description 26
5.2 Control Wiring 27
5.3 Auxiliary Terminal Description 28
5.4 Auxiliary Terminal Wiring 28

SECTION 6 - OPERATING INSTRUCTIONS 28

6.1 Power and Reset Switches 28
6.2 Shutdown Conditions 29-30
- Soft Shutdown
- Hard Shutdown

6.3 Manual Gate Operation 31-32
- Emergency Vehicle Access Conditions
- FAIL-SAFE Manual Operation
- Manual Release

SECTION 7 - OPTIONAL CONVENIENCE OPEN SYSTEM 33

7.1 Circuit Board 2340 Setup 33
7.2 DC System Description 34
7.3 DIP-Switch Settings 34

SECTION 8 - MAINTENANCE AND TROUBLESHOOTING 35

8.1 Maintenance 35
8.2 Troubleshooting 36-37
8.3 Accessory Items 38
Model 6300's Wiring Diagrams 39-44

ASTM F2200 Standard for Gate Construction

Vehicular gates should be constructed and installed in accordance with ASTM F2200; Standard Specification for Automated Vehicular Gate Construction. For a copy of this standard, contact ASTM directly at 610-832-9585; service@astm.org; or www.astm.org.

Important Safety Instructions

WARNING - To reduce the risk of injury or death:

1. READ AND FOLLOW ALL INSTRUCTIONS.
2. Never let children operate or play with gate controls. Keep the remote control away from children.
3. Always keep people and objects away from gate. **NO ONE SHOULD CROSS THE PATH OF THE MOVING GATE.**
4. Test the operator monthly. The gate MUST reverse on contact with a rigid object or stop or reverse when an object activates the non-contact sensors. After adjusting the force or the limit of travel, retest the gate operator. Failure to adjust and retest the gate operator properly can increase the risk of injury or death.
5. Use the emergency release only when the gate is not moving.
6. KEEP GATES PROPERLY MAINTAINED. Read the owner's manual. Have a qualified service person make repairs to gate hardware.
7. The entrance is for vehicles only. Pedestrians must use separate entrance.
8. **SAVE THESE INSTRUCTIONS!**

Instructions regarding intended installation:

- Install the gate operator only if:
  1. The operator is appropriate for the construction of the gate and the usage class of the gate.
  2. All openings of a horizontal slide gate are guarded or screened from the bottom of the gate to a minimum of 6 feet (1.83 m) above the ground to prevent a 2 ¼ inch (57.2 mm) diameter sphere from passing through the openings anywhere in the gate, and in that portion of the adjacent fence that the gate covers in the open position.
  3. All exposed pinch points are eliminated or guarded.
  4. Guarding is supplied for exposed rollers.
- The operator is intended for installation only on gates used for vehicles. Pedestrians must be supplied with a separate access opening. The pedestrian access opening shall be designed to promote pedestrian usage. Locate the gate such that persons will not come in contact with the vehicular gate during the entire path of travel of the vehicular gate.
- The gate must be installed in a location so that enough clearance is supplied between the gate and adjacent structures when opening and closing to reduce the risk of entrapment. Swinging gates should not open into public access areas.
- The gate must be properly installed and work freely in both directions prior to the installation of the gate operator. Do not over-tighten the operator clutch, pressure relief valve or reduce reversing sensitivity to compensate for a damaged gate.
- For gate operators utilizing Type D protection:
  1. The gate operator controls must be placed so that the user has full view of the gate area when the gate is moving.
  2. A warning placard shall be placed adjacent to the controls.
  3. An automatic closing device (such as a timer, loop sensor, or similar device) shall not be employed.
  4. No other activation device shall be connected.
- Controls intended for user activation must be located at least ten feet (10’) away from any moving part of the gate and where the user is prevented from reaching over, under, around or through the gate to operate the controls. Outdoor or easily accessible controls should have a security feature to prevent unauthorized use.
- The Stop and/or Reset button must be located in the line-of-sight of the gate. Activation of the reset control shall not cause the operator to start.
- A minimum of two (2) WARNING SIGNS shall be installed, one on each side of the gate where easily visible.
- For gate operators utilizing a non-contact sensor:
  1. See the instructions on the placement of non-contact sensors for each type of application.
  2. Care shall be exercised to reduce the risk of nuisance tripping, such as when a vehicle trips the sensor while the gate is still moving in the opening direction.
  3. One or more non-contact sensors shall be located where the risk of entrapment or obstruction exist, such as the perimeter reachable by a moving gate or barrier.

- For gate operators utilizing contact sensors:
  1. One or more contact sensors shall be located where the risk of entrapment or obstruction exist, such as at the leading edge, trailing edge, and post mounted both inside and outside of a vehicular horizontal slide gate.
  2. One or more contact sensors shall be located at the bottom edge of a vehicular vertical lift gate.
  3. One or more contact sensors shall be located at the pinch point of a vehicular vertical pivot gate.
  4. A hardwired contact sensor shall be located and its wiring arranged so that the communication between the sensor and the gate operator is not subjected to mechanical damage.
  5. A wireless contact sensor such as one that transmits radio frequency (RF) signals to the gate operator for entrapment protection functions shall be located where the transmission of the signals are not obstructed or impeded by building structures, natural landscaping or similar obstructions. A wireless contact sensor shall function under the intended end-use conditions.
  6. One or more contact sensors shall be located at the bottom edge of a vertical barrier (arm).

Important Notices

Vehicular gate operator products provide convenience and security. However, gate operators must use high levels of force to move gates and most people underestimate the power of these systems and do not realize the potential hazards associated with an incorrectly designed or installed system. These hazards may include:

- Pinch points
- Entrapment areas
- Reach through hazards
- Absence of entrapment protection devices
- Improperly located access controls
- Absence of vehicle protection devices
- Absence of controlled pedestrian access

In addition to these potential hazards, automated vehicular gate systems must be installed in accordance with the UL-325 Safety Standard and the ASTM F2200 Construction Standard. Most lay persons are unaware of, or are not familiar with, these standards. If an automated vehicular gate system is not properly designed, installed, used and maintained, serious injuries or death can result. Be sure that the installer has instructed you on the proper operation of the gate and gate operator system.

Be sure that the installer has trained you about the basic functions of the required reversing systems associated with your gate operating system and how to test them. These include reversing loops, inherent reversing system, electric edges, photoelectric cells, or other external devices.

- This Owner's Manual is your property. Keep it in a safe place for future reference.
- Be sure that all access control devices are installed a minimum distance of 10 feet away from the gate and gate operator, or in such a way that a person cannot touch the gate or gate operator while using the device. If access control devices are installed in violation of these restrictions, immediately remove the gate operator from service and contact your installing dealer.
- Loops and loop detectors, photo-cells or other equivalent devices must be installed to prevent the gate from closing on vehicular traffic.
- The speed limit for vehicular traffic through the gate area is 5 MPH. Install speed bumps and signs to keep vehicular traffic from speeding through the gate area. Failure to adhere to posted speed limits can result in damage to the gate, gate operator, and to the vehicle.
- Be sure that all persons who will use the gate system are familiar with the proper use of the gate and gate operator and are familiar with the possible hazards associated with the gate system.
- Be sure that warning signs are permanently installed on both sides of the gate in an area where they are fully visible to traffic.
- It is your responsibility to periodically check all entrapment protection devices. If any of these devices are observed to function improperly, remove the operator from service immediately and contact your installing or servicing dealer.
- Follow the recommended maintenance schedule.
- Do not allow children to play in the area of the operator or to play with any gate-operating device.
- To remove the gate operator from service, operate the gate to the full open position and then shut off power to the operator at the service panel.

UL 325 Entrapment Protection

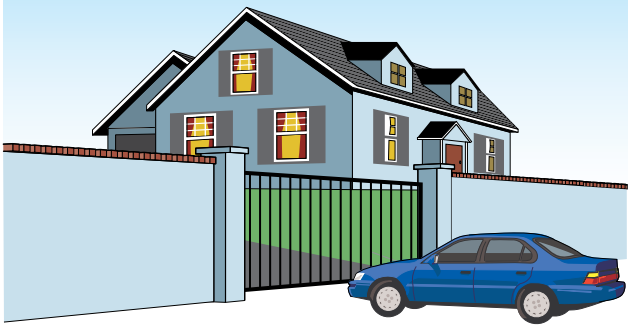

Class I

A vehicular gate operator (or system) intended for use in a home of one-to four single family dwelling, or a garage or parking area associated therewith.

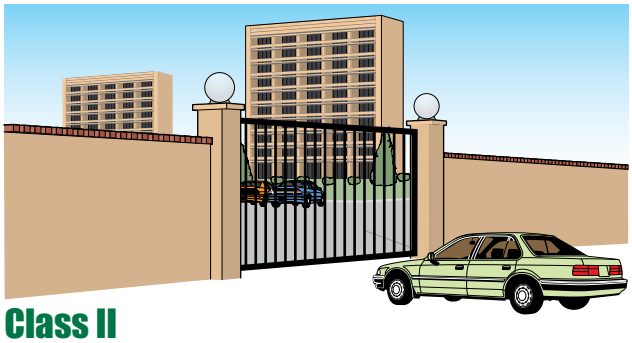

Class II

A vehicular gate operator (or system) intended for use in a commercial location or building such as a multi-family housing unit (five or more single family units) hotel, garages, retail store or other building servicing the general public.

Class III

A vehicular gate operator (or system) intended for use in a industrial location or building such as a factory or loading dock area or other locations not intended to service the general public.

Class IV

A vehicular gate operator (or system) intended for use in a guarded industrial location or building such as an airport security area or other restricted access locations not servicing the general public, in which unauthorized access is prevented via supervision by security personnel.

This table illustrates the entrapment protection requirements for each of the four UL 325 classes.

UL 325 Classifications	Horizontal Slide, Vertical Lift, Vertical Pivot		Swing and Vertical Barrier (arm)	
	Primary Protection	Secondary Protection	**Primary Protection**	Secondary Protection
Class I and II	**A**	B1, B2 or D	**A or C**	A, B1, B2, C or D
Class III	**A, B1 or B2**	A, B1, B2, D or E	**A, B1, B2 or C**	A, B1, B2, C or D
Class IV	**A, B1, B2 or D**	A, B1, B2, D or E	**A, B1, B2, C or D**	A, B1, B2, C, D or E

A - Inherent entrapment protection system.
B1 - Provision for connection of, or supplied with, a non-contact sensor (photoelectric sensor or the equivalent). When used as the PRIMARY device, must be monitored.
B2 - Provision for connection of, or supplied with, a contact sensor (edge device or the equivalent). When used as the PRIMARY device, must be monitored.
C - Inherent adjustable clutch or pressure relief device.
D - Provision for connection of, or supplied with, an actuating device requiring continuous pressure to maintain opening or closing motion of the gate.
E - An inherent audio alarm.

Glossary

GATE - A moving barrier such as a swinging, sliding, raising, lowering, or the like, barrier, that is a stand-alone passage barrier or is that portion of a wall or fence system that controls entrance and/or egress by persons or vehicles and completes the perimeter of a defined area.

RESIDENTIAL VEHICULAR GATE OPERATOR – CLASS I - A vehicular gate operator (or system) intended for use in a home of one-to four single family dwelling, or garage or parking area associated therewith.

COMMERCIAL / GENERAL ACCESS VEHICULAR GATE OPERATOR - CLASS II - A vehicular gate operator (or system) intended for use in a commercial location or building such as a multi-family housing unit (five or more single family units), hotels, garages, retail store, or other building servicing the general public.

INDUSTRIAL / LIMITED ACCESS VEHICULAR GATE OPERATOR - CLASS III - A vehicular gate operator (or system) intended for use in an industrial location or building such as a factory or loading dock area or other locations not intended to service the general public.

RESTRICTED ACCESS VEHICULAR GATE OPERATOR - CLASS IV - A vehicular gate operator (or system) intended for use in a guarded industrial location or building such as an airport security area or other restricted access locations not servicing the general public, in which unauthorized access is prevented via supervision by security personnel.

VEHICULAR BARRIER (ARM) OPERATOR (OR SYSTEM) - An operator (or system) that controls a cantilever type device (or system), consisting of a mechanical arm or barrier that moves in a vertical arc, intended for vehicular traffic flow at entrances or exits to areas such as parking garages, lots or toll areas.

VEHICULAR HORIZONTAL SLIDE-GATE OPERATOR (OR SYSTEM) - A vehicular gate operator (or system) that controls a gate which slides in a horizontal direction that is intended for use for vehicular entrance and exit to a drive, parking lot, or the like.

VEHICULAR SWING-GATE OPERATOR (OR SYSTEM) - A vehicular gate operator (or system) that controls a gate which moves in an arc in a horizontal plane that is intended for use for vehicular entrance and exit to a drive, parking lot, or the like.

SYSTEM - In the context of these requirements, a system refers to a group of interacting devices intended to perform a common function.

WIRED CONTROL - A control implemented in a form of fixed physical interconnections between the control, the associated devices, and an operator to perform predetermined functions in response to input signals.

WIRELESS CONTROL - A control implemented in means other than fixed physical interconnections (such as radio waves or infrared beams) between the control, the associated devices, and an operator to perform predetermined functions in response to input signals.

INHERENT ENTRAPMENT PROTECTION SYSTEM - A system, examples being a motor current or speed sensing system, which provides protection against entrapment upon sensing an object and is incorporated as a permanent and integral part of the operator.

EXTERNAL ENTRAPMENT PROTECTION DEVICE - A device, examples being an edge sensor, a photoelectric sensor, or similar entrapment protection device, which provides protection against entrapment when activated and is not incorporated as a permanent part of an operator.

ENTRAPMENT - The condition when an object is caught or held in a position that increases the risk of injury.

Swing Gate Requirements

The operator is intended for installation only on gates used for vehicles. Pedestrians must be supplied with a separate access opening. The pedestrian access opening shall be designed to promote pedestrian usage. Locate the gate such that persons will not come in contact with the vehicular gate during the entire path of travel of the vehicular gate. (ref. UL325 56.8.4.b)

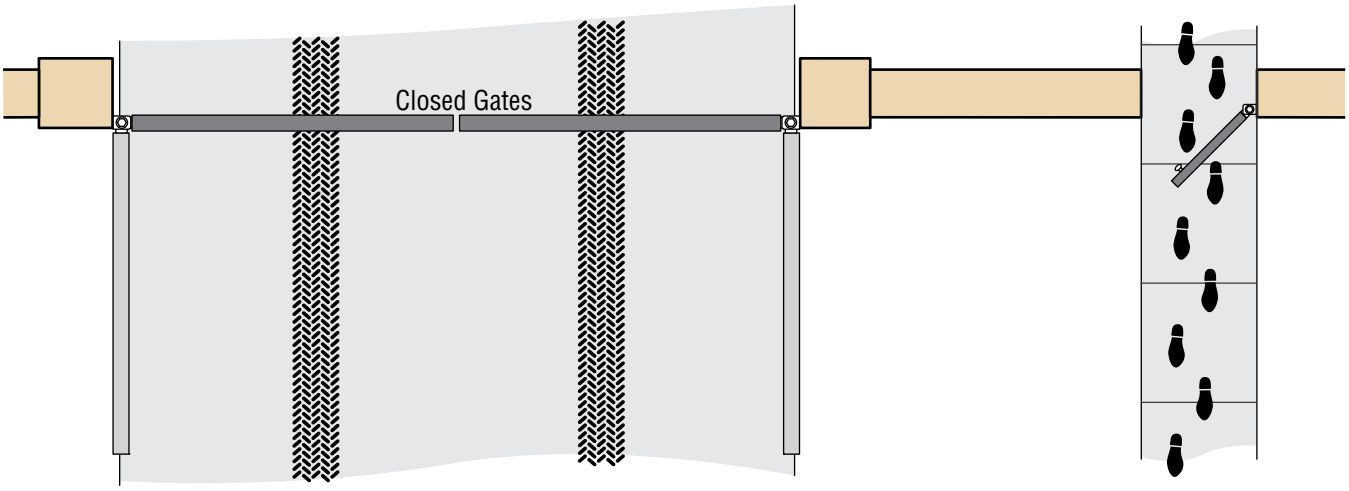

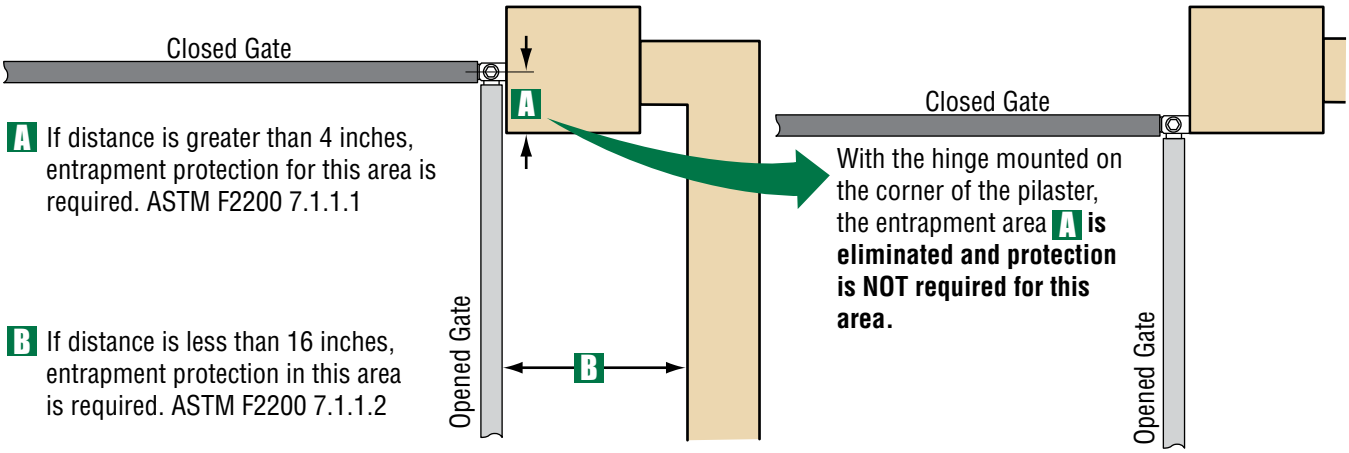

A If distance is greater than 4 inches, entrapment protection for this area is required. ASTM F2200 7.1.1.1

B If distance is less than 16 inches, entrapment protection in this area is required. ASTM F2200 7.1.1.2

With the hinge mounted on the corner of the pilaster, the entrapment area **A** **is eliminated and protection is NOT required for this area.**

See pages 23 and 24 for typical layout locations.

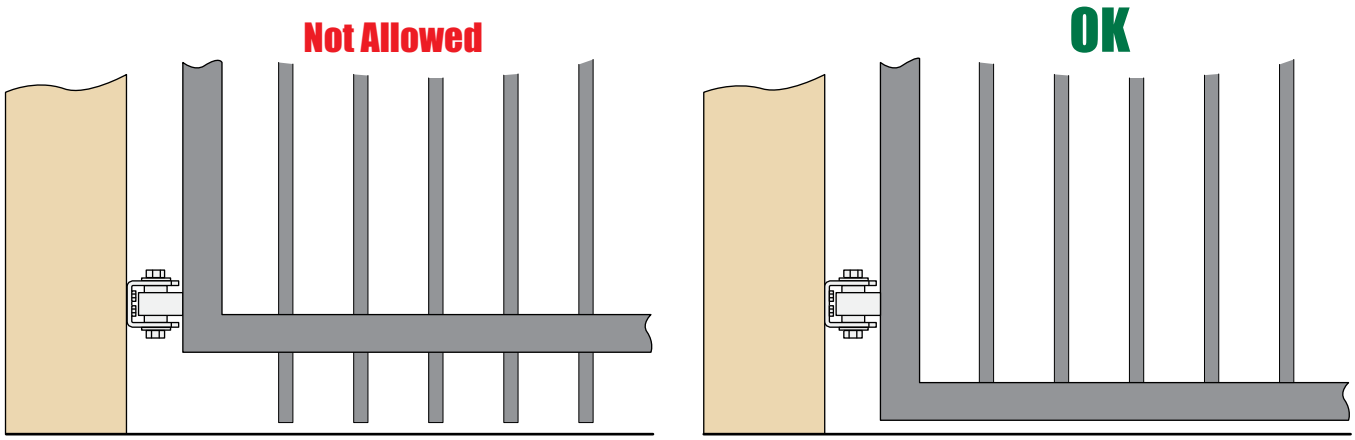

Gates shall have smooth bottom edges, with vertical bottom edged protrusions not exceeding 0.50 inches. ASTM F2200 4.3

Swing Gate Protection

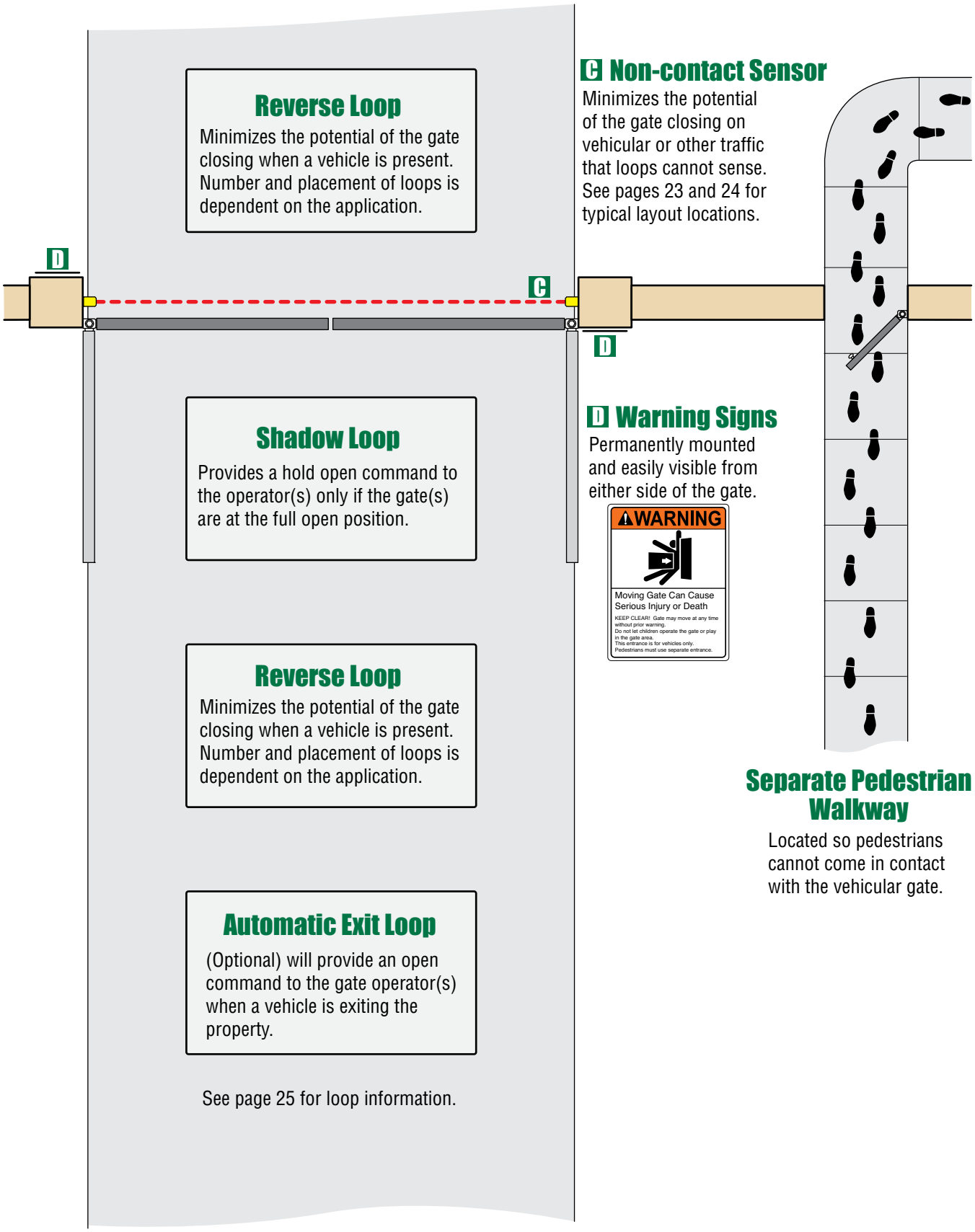

Reverse Loop

Minimizes the potential of the gate closing when a vehicle is present. Number and placement of loops is dependent on the application.

Shadow Loop

Provides a hold open command to the operator(s) only if the gate(s) are at the full open position.

Reverse Loop

Minimizes the potential of the gate closing when a vehicle is present. Number and placement of loops is dependent on the application.

Automatic Exit Loop

(Optional) will provide an open command to the gate operator(s) when a vehicle is exiting the property.

See page 25 for loop information.

C Non-contact Sensor

Minimizes the potential of the gate closing on vehicular or other traffic that loops cannot sense. See pages 23 and 24 for typical layout locations.

D Warning Signs

Permanently mounted and easily visible from either side of the gate.

Separate Pedestrian Walkway

Located so pedestrians cannot come in contact with the vehicular gate.

SECTION 1 - INSTALLATION

Prior to beginning the installation of the swing gate operator, we suggest that you become familiar with the instructions, illustrations, and wiring guide-lines in this manual. This will help insure that your installation is performed in an efficient and professional manner compliant with UL 325 safety and ASTM F2200 construction standards.

The proper installation of the vehicular swing gate operator is an extremely important and integral part of the overall access control system. Check all local building ordinances and building codes prior to installing this operator. Be sure your installation is in compliance with local codes.

1.1 Operator Position

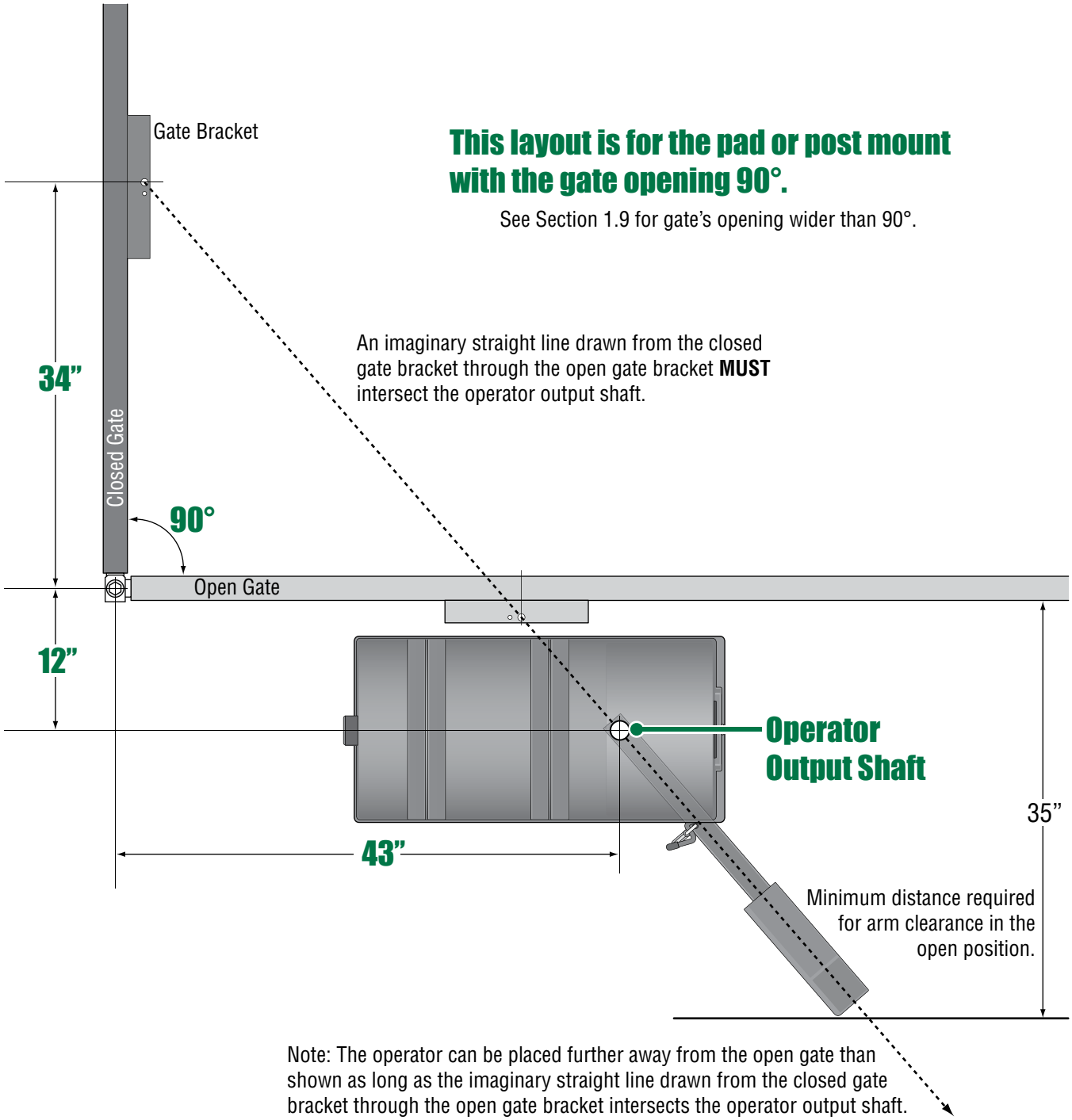

Note: The operator can be placed further away from the open gate than shown as long as the imaginary straight line drawn from the closed gate bracket through the open gate bracket intersects the operator output shaft.

1.2 Post Mount or Pad Mount Base Assembly

Post Support Base

Screw the posts to the support plate and mount into concrete **BEFORE** attaching the operator.

1 1/2" bolts through the main gear bracket mounting holes.

Hardware for Post Mount:

(6) 1 1/2 inch bolts. For support plate.

(4) Non-slip nuts. For existing threaded studs on bottom of 6300.

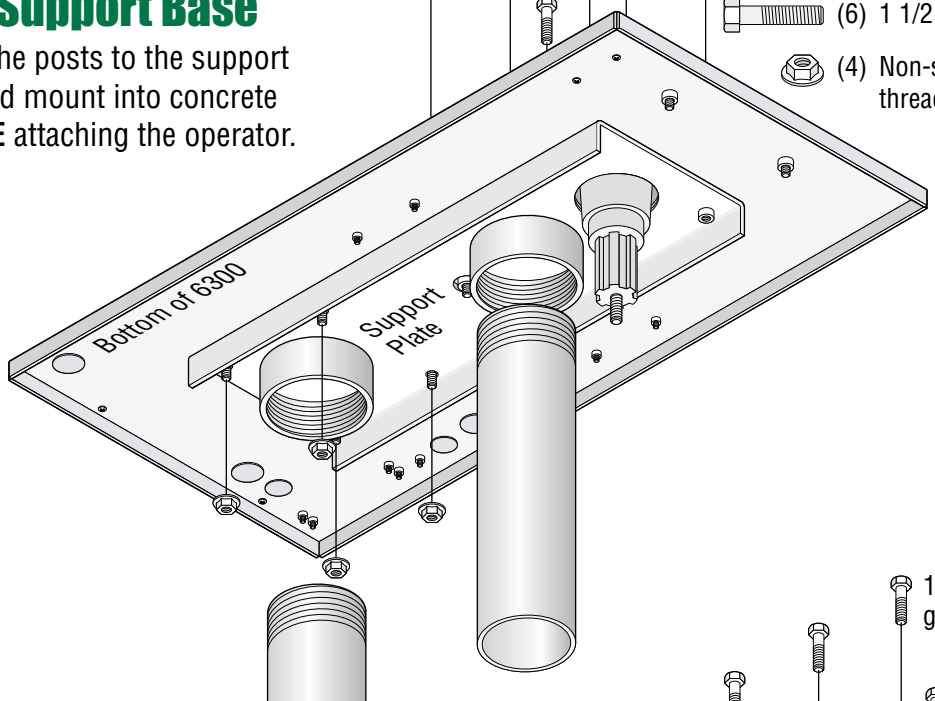

Pad Support Base

Remove the cover from the operator and **GENTLY** place the operator on its side before attaching the pad base.

1 1/2" bolts through the main gear bracket mounting holes.

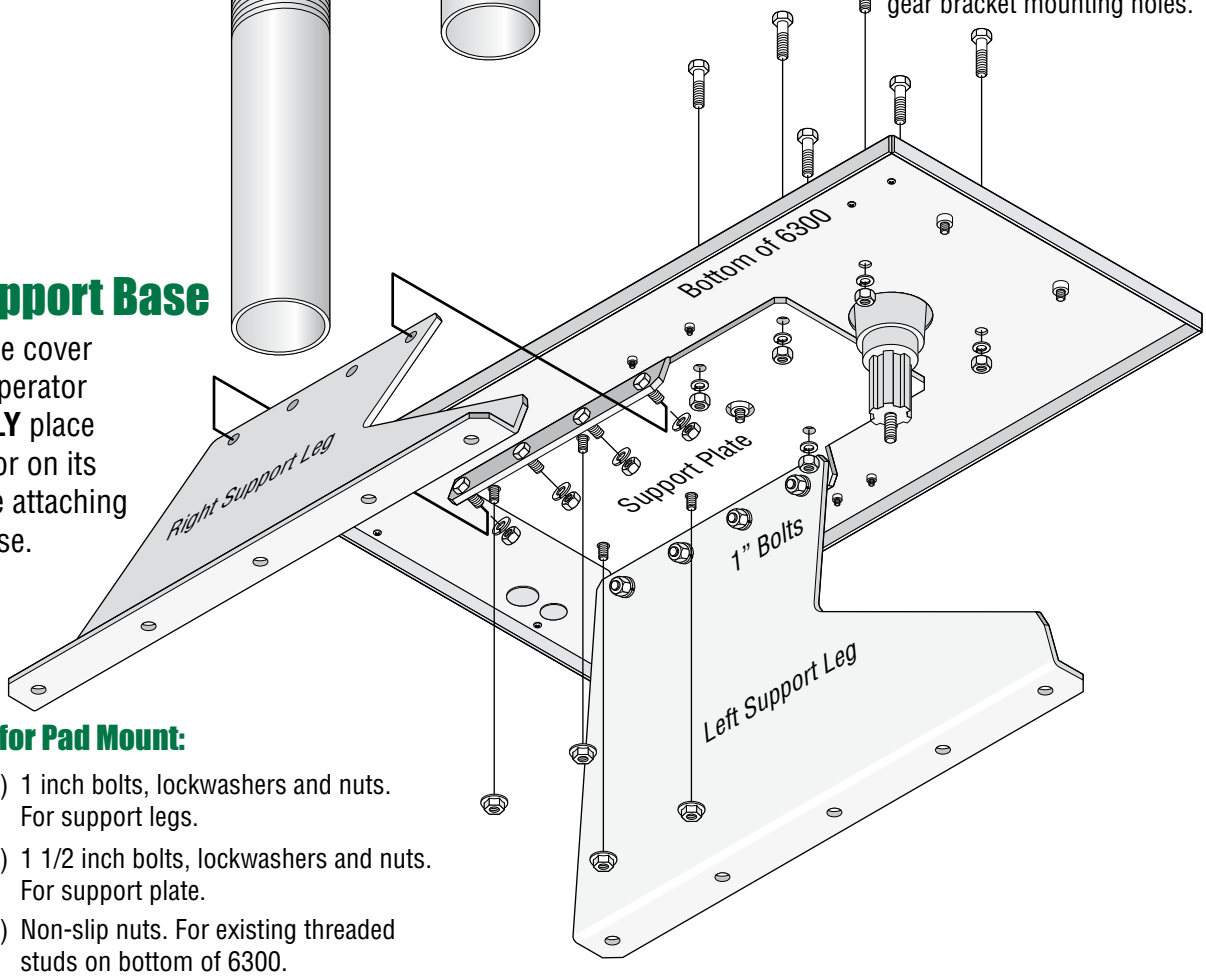

Hardware for Pad Mount:

(8) 1 inch bolts, lockwashers and nuts. For support legs.

(6) 1 1/2 inch bolts, lockwashers and nuts. For support plate.

(4) Non-slip nuts. For existing threaded studs on bottom of 6300.

1.3 Underground Conduit Requirements

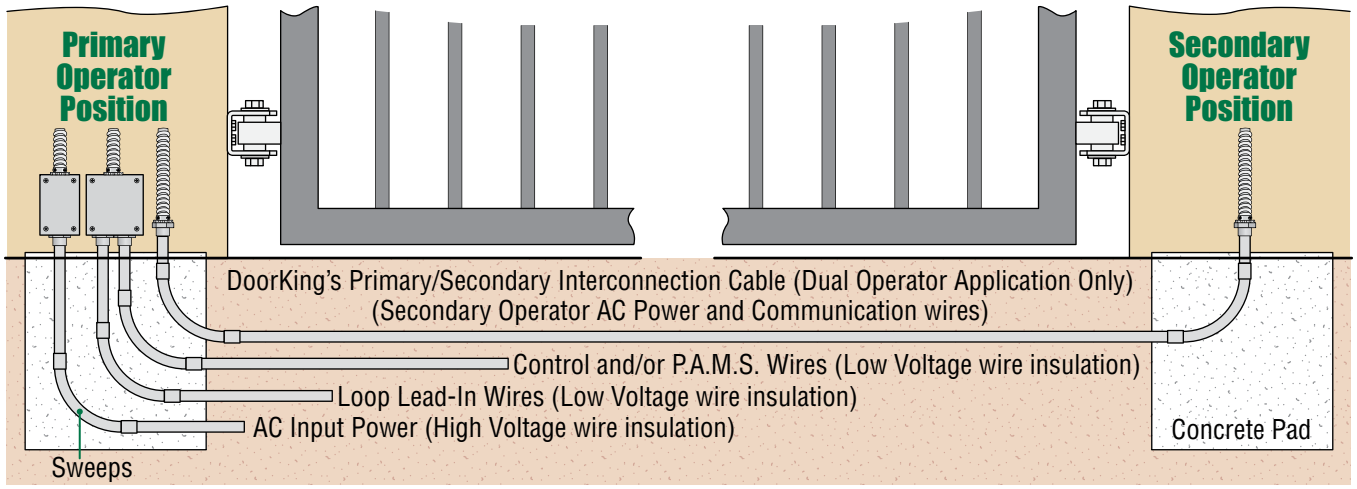

- The conduit requirements are for a typical slide gate operator installation (the secondary operator is shown for those applications where a secondary operator may be used). **The conduit requirements for your application may vary from this depending on your specific needs.**
- Use only sweeps for conduit bends. Do not use 90° elbows as this will make wire pulls very difficult and can cause damage to wire insulation.
- DoorKing recommends using 3/4-inch conduit.
- Be sure that all conduits are installed in accordance with local codes.
- **Never** run low voltage rated wire insulation in the same conduit as high voltage rated wire insulation.

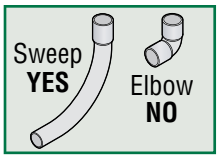

1.4 Pad Mount

Note: 2" thick gate Illustrated.

Important Note: These pad mount measurements will **ONLY** work when the operator is positioned using the **"1.1 Operator Position"** measurements on page 10.

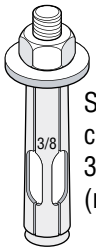

Secure the operator to the concrete pad with six (6) 3/8" x 3" sleeve anchors (not supplied).

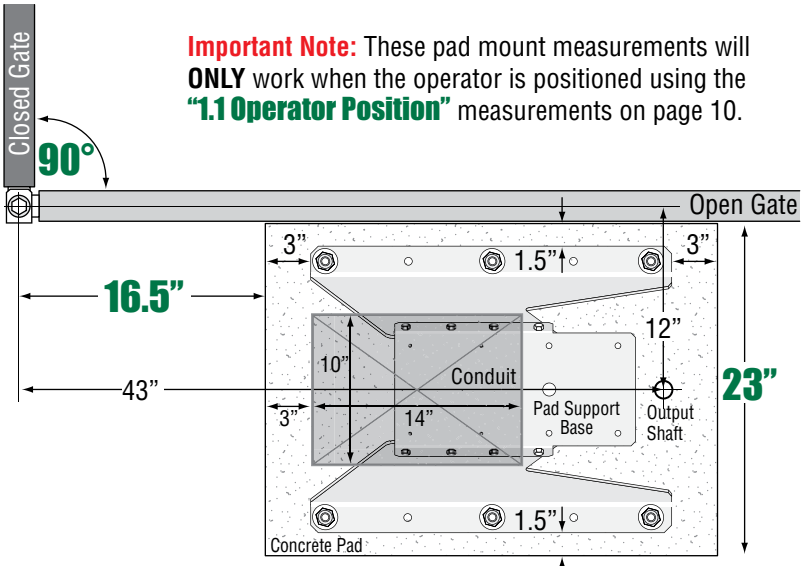

Concrete Pad Position

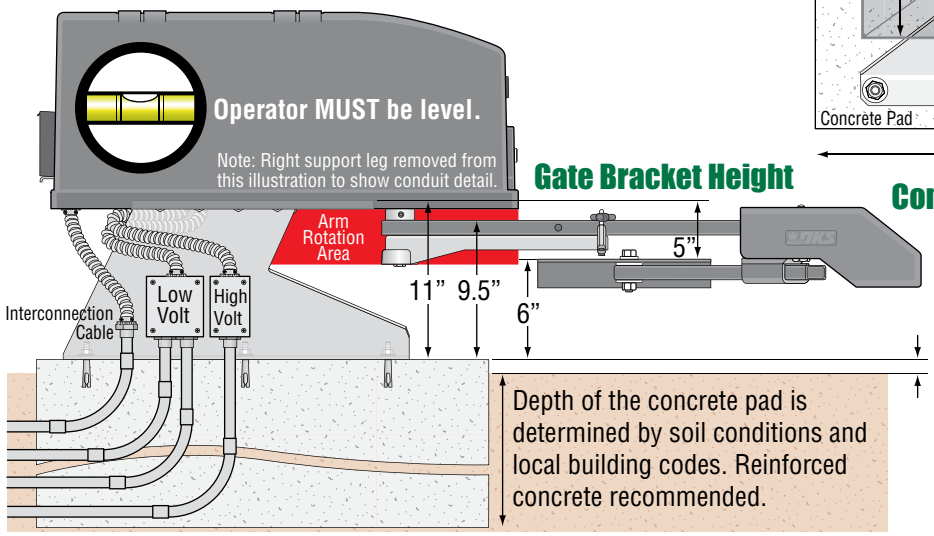

Gate Bracket Height

Depth of the concrete pad is determined by soil conditions and local building codes. Reinforced concrete recommended.

Note: If allowed by local codes, the top of the concrete pad can be flush with ground level, which will allow the gate bracket to be mounted lower on the gate.

1.5 Post Mount

Note: 2” thick gate Illustrated.

Important Note: These post mount measurements will **ONLY** work when the operator is positioned using the **“1.1 Operator Position”** measurements on page 10.

Mount the post base into the concrete before installing the operator.

The post mount installation will allow the operator to be mounted low enough to attach the gate bracket to the lower gate rail if desired.

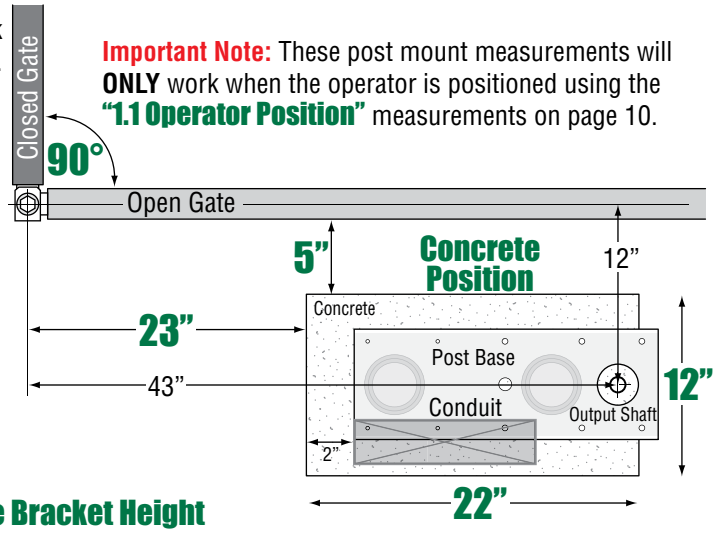

Run all conduit on the opposite side of the open gate.

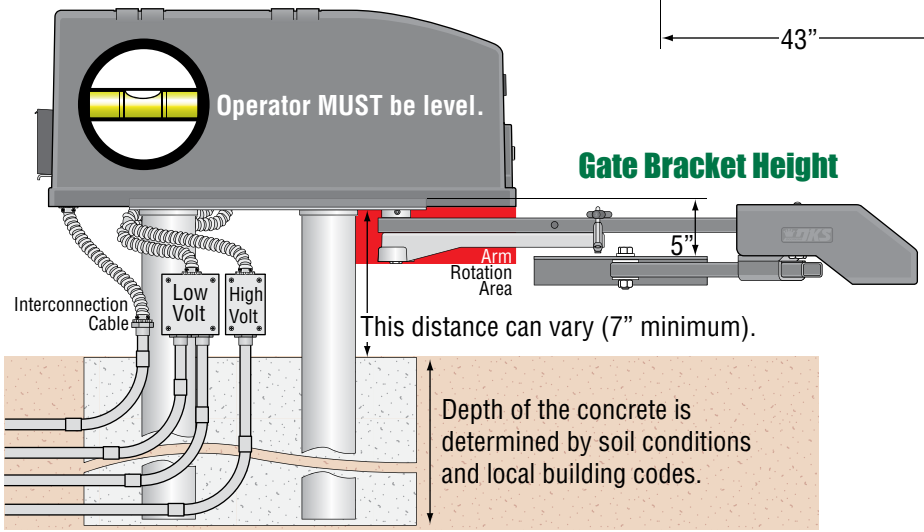

1.6 Arm and Gate Bracket Installation

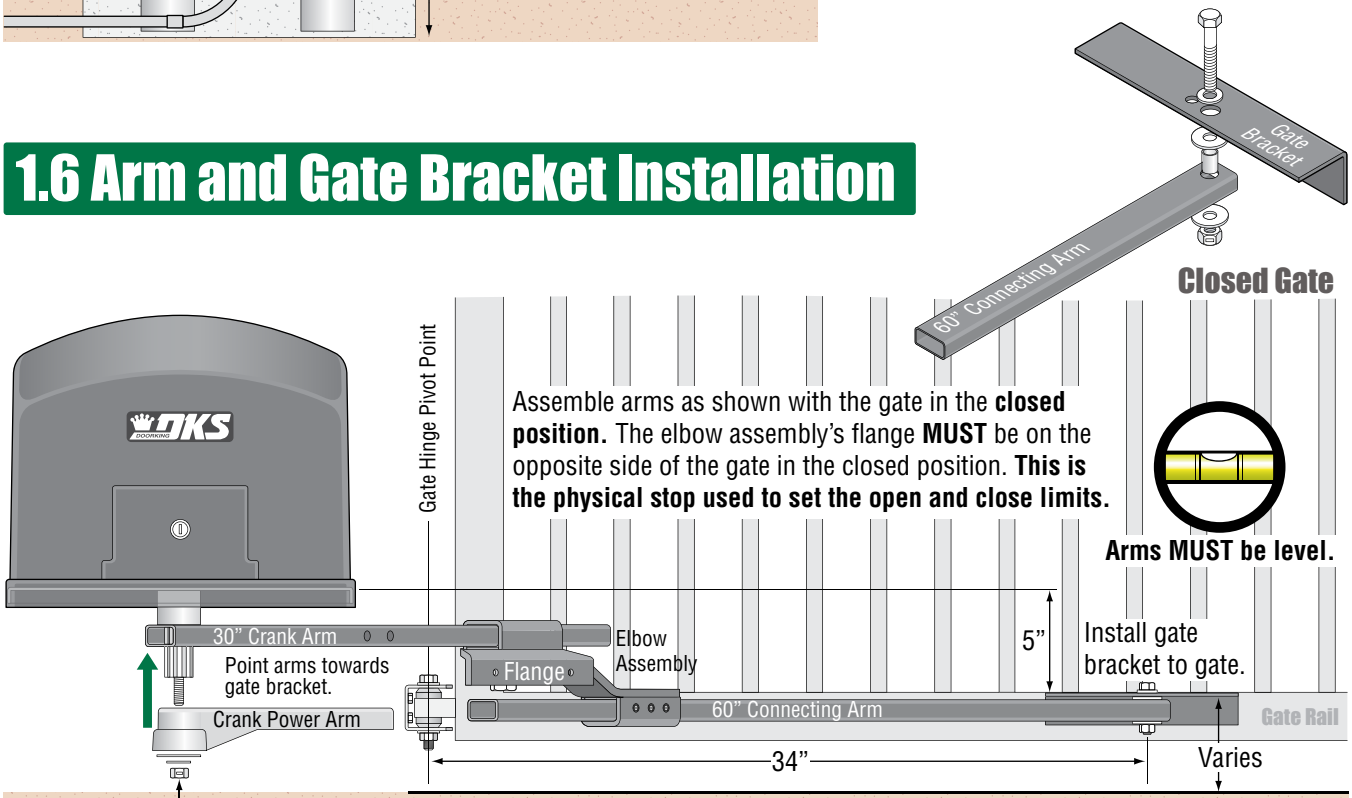

Adjust the locknut on the crank power arm so that it is snug against the washer, but will still allow the crank arm to rotate with little force. **This is the operator’s manual release option when the crank arm is unlocked.**

Do not secure the elbow assembly to the arms until the arms have been adjusted. (See next page).

Do not insert the locking pin or padlock into the crank arm. It will be installed after arms have been adjusted.

1.7 Manually Adjust the Open and Closed Gate Positions

DO NOT power up the operator to set the open and closed gate positions. The first time the operator is powered up and cycled, it will automatically set the open and close limits. To do this, the arms **MUST** already be in the **correct** configuration.

Closed Arms Position

Open Arms Position

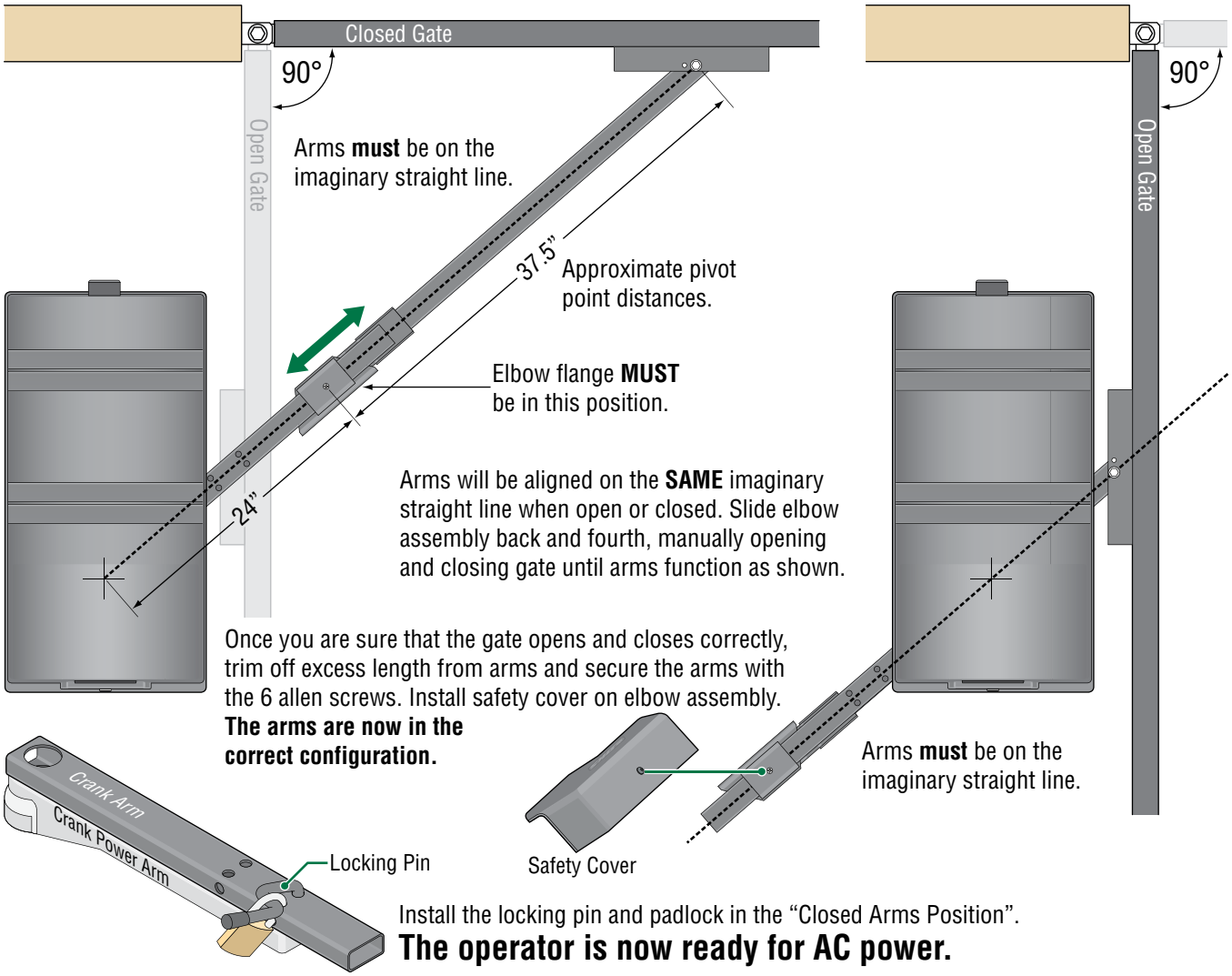

Install the locking pin and padlock in the "Closed Arms Position".

The operator is now ready for AC power.

1.8 Installation of Warning Signs

This DoorKing Swing Gate Operator is shipped with two warning signs. The purpose of the warning sign is to alert uninformed persons, and to remind persons familiar with the gate system, that a possible hazard exists so that appropriate action can be taken to avoid the hazard or to reduce exposure to the hazard. See page 9 for suggested mounting positions of signs.

- **Permanently install the supplied warning signs in locations so that the signs are visible by persons on both sides of the gate.**
- Use appropriate hardware such as wood or sheet metal screws (not supplied) to install the warning signs.

1.9 Gates Opening Wider Than 90°

The installation of an operator opening gates wider that 90° is the same for 1.3 through 1.8 except the operator and concrete pad will be in a different position. Individual requirements can be calculated following this 105° demonstrated sample.

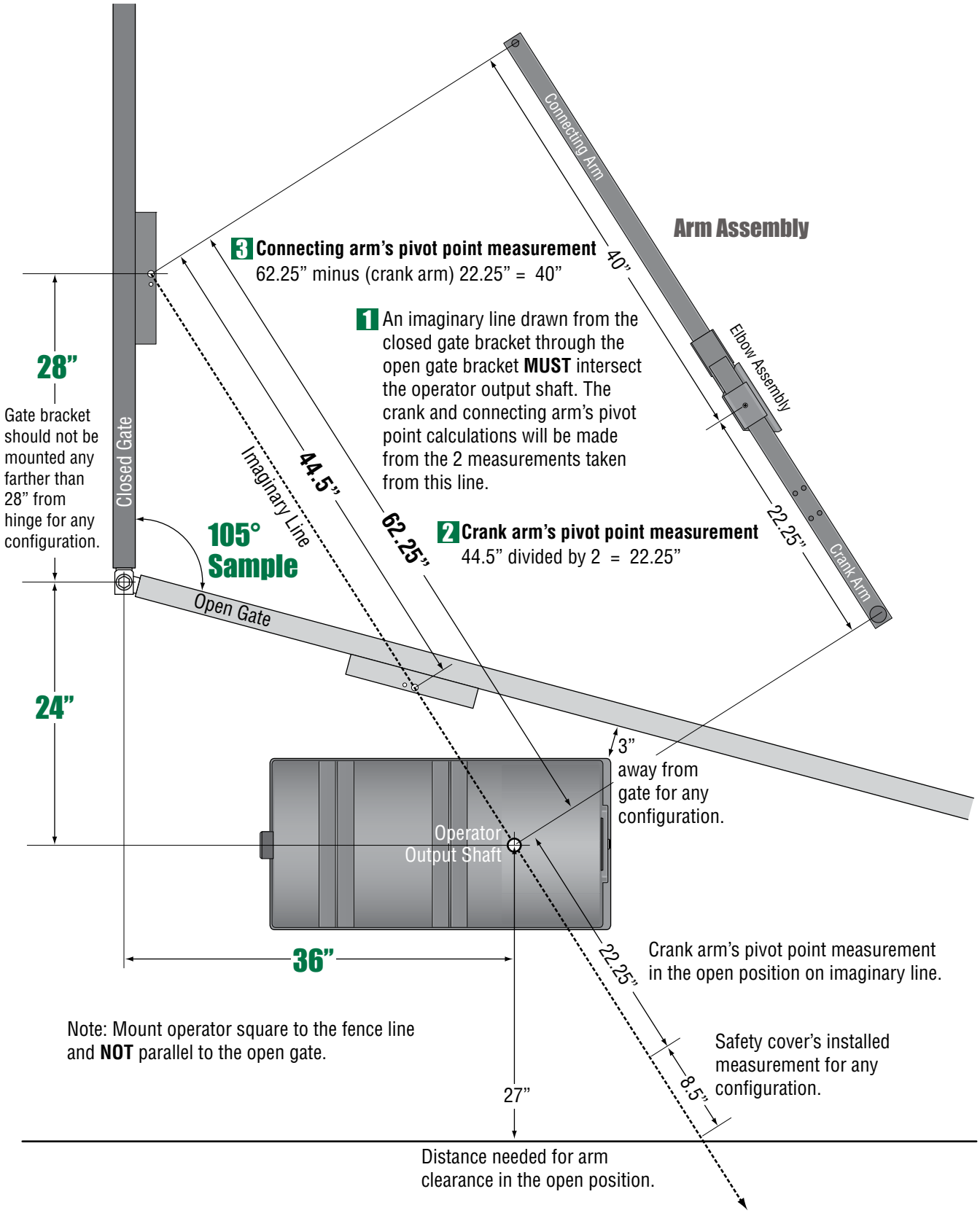

SECTION 2 - AC POWER TO OPERATOR(S)

Before attempting to connect any wiring to the operator, be sure that the circuit breaker in the electrical panel is in the OFF position. Permanent wiring must be installed to the operator as required by local electrical codes. It is recommended that a licensed electrical contractor perform this work.

Since building codes vary from city to city, we highly recommend that you check with your local building department prior to installing any permanent wiring to be sure that all wiring to the operator (both high and low voltage) complies with local code requirements.

THIS GATE OPERATOR MUST BE PROPERLY GROUNDED!!

2.1 High Voltage Wire Runs

The distance shown in the chart is measured in **Feet** from the operator to the power source. If power wiring is greater than the maximum distance shown, it is recommended that a service feeder be installed. When large gauge wire is used, a separate junction box must be installed for the operator connection. The wire table is based on stranded copper wire. The wire run calculations are based on a power source with a 3% voltage drop on the power line, plus an additional 10% reduction in distance to allow for other losses in the system.

This table illustrates the high voltage AC power wire size and distance limitations for a single operator.

Model Type	Voltage Required	Amps Required	Wire Size / Max Distance in Feet			
			12 AWG	10 AWG	8 AWG	6 AWG
6300 1/2 HP	**115**	**5.4**	180	290	485	725
6300 1 HP	**115**	**9.7**	100	162	270	405

Reduce the wire distance in half for a primary/secondary dual gate operator application

Never run low voltage rated wire insulation in the same conduit as high voltage rated wire insulation.

"Optional" High Voltage Kit Installation Note: When installing a high voltage kit for 208/230/460/575 VAC input power, refer to the **"high voltage AC power wire size and distance limitations"** table on the instruction sheet with the high voltage kit (P/N 2600-266) for AC power wire run limitations.

"Optional" Heater Installation Note: When installing a heater, refer to the **"high voltage AC power wire size and distance limitations"** table on the instruction sheet with the heater kit for AC power wire run limitations.

2.2 High Voltage Terminal Connections

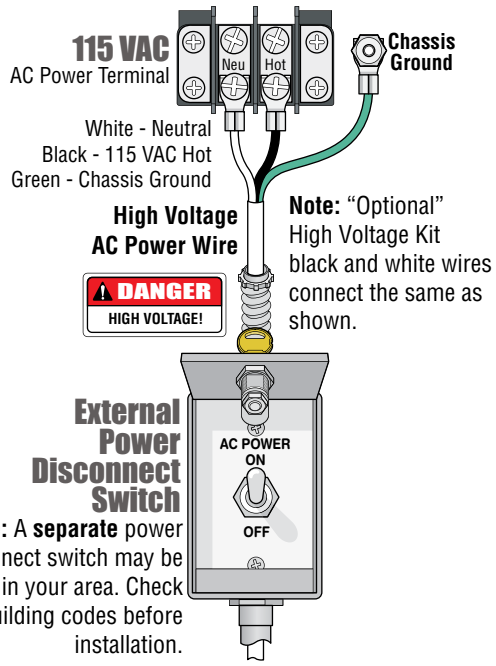

- Route incoming high voltage power through underground conduit and into the operator as shown in Section 1.4 or 1.5 on page 12 or 13.
- Be sure wiring is installed in accordance with local codes. Be sure to color code all wiring.
- It is recommended that a surge suppressor be installed on the high voltage power lines to help protect the operator and circuit board from surges and power fluctuations.
- Secondary operator in a dual operator application gets power through the 8-wire interconnection cable that links the 2 operators together. See Section 2.3 "Bi-Parting Gates Wiring - Dual Gate Operators" on the next page.

Section 1 MUST be completed before power can be turned on.

Every time the operator is powered up, the **First** open command **will automatically set the open and close limits of the gate.** (See page 21).

2.3 Bi-Parting Gates Wiring - Dual Gate Operators

Connect the Primary/Secondary operators together with DoorKing's interconnection cable as shown (Different lengths sold separately P/N 2600-75x). High voltage power and low voltage communications are supplied to the secondary operator by DoorKing's UL approved cable that is run in a single conduit. Two conduits (High voltage and low voltage) will need to be provided to the secondary operator when NOT using DoorKing's UL listed, wet environment interconnection cable.

Interconnection Cable Wiring

Secondary Operator		Primary Operator
(Red) Motor #1	↔	Motor Terminal #1 (Red)
(Blue) Motor #2	↔	Motor Terminal #2 (Blue)
(White) Neutral #3	↔	Main Terminal Neutral #2 (White)
(Purple) 24 VAC #4	↔	Main Terminal 24 VAC #7 (Purple) For Convenience Open Models
(Yellow) Limit #5	↔	Main Terminal Limit #8 (Yellow)
(Brown) Spare #6 Must be connected	↔	Main Terminal Spare #10 (Brown) Must be connected
(Orange) Limit #7	↔	Main Terminal Limit #19 (Orange)
(Gray) COM #8	↔	2340 Terminal COM #2 (Gray) For Convenience Open Models

- All control, loop detector, safety and auxiliary devices are wired to the primary operator.
- Secondary operator contains NO 4502 control board.

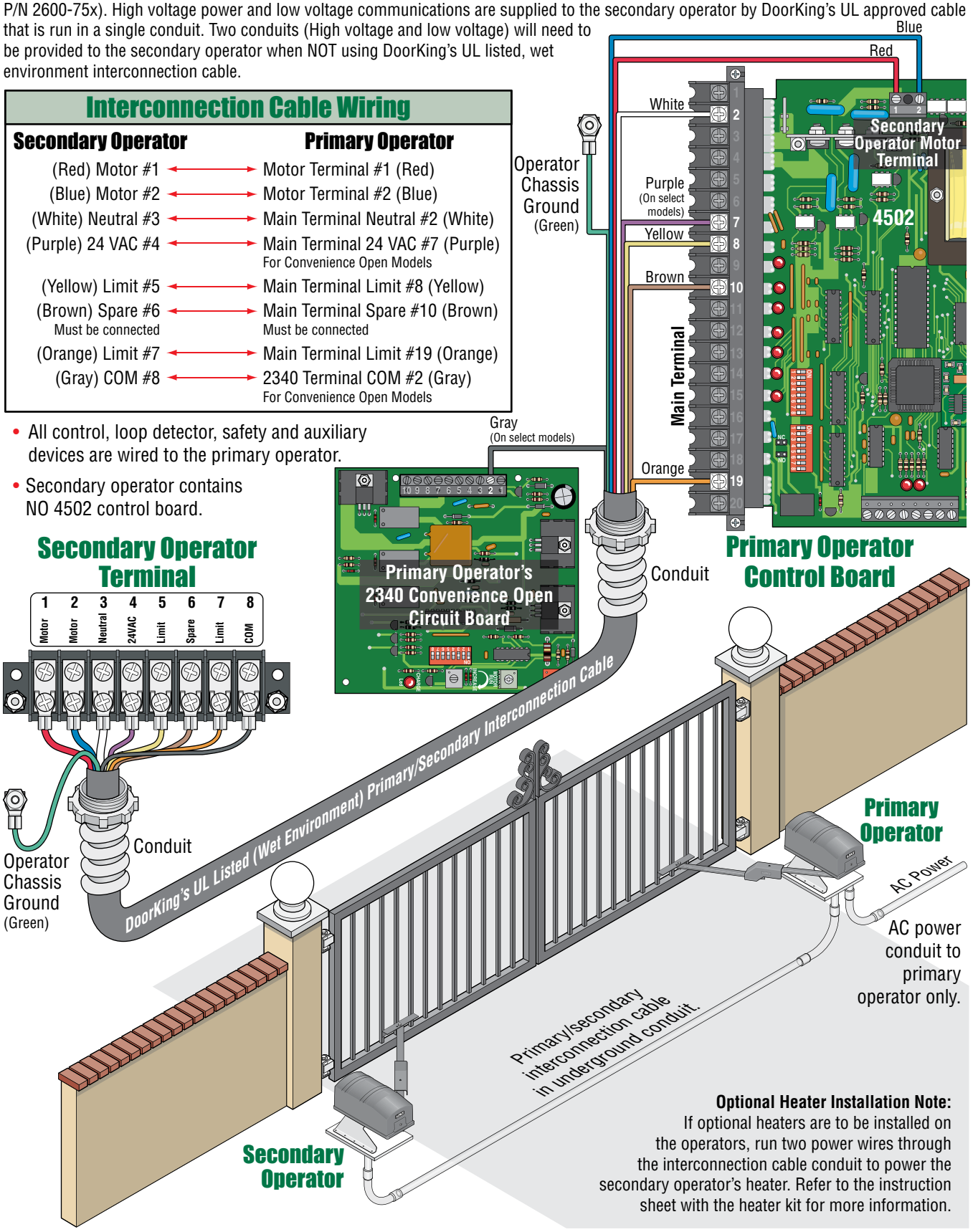

Optional Heater Installation Note:
If optional heaters are to be installed on the operators, run two power wires through the interconnection cable conduit to power the secondary operator's heater. Refer to the instruction sheet with the heater kit for more information.

SECTION 3 - ADJUSTMENTS

The switch settings and adjustments in this chapter should be made after your installation and wiring to the operator(s) is complete. **Whenever any of the programming switches on the circuit board are changed, power must be shut-off, and then turned back on for the new setting to take effect.**

3.1 4502 Circuit Board Description and Adjustments

How LEDs Work: **Power LED** indicates that low voltage power is applied to the circuit board. **Input LEDs** should be OFF and will only illuminate when an input is activated. P**ulse 1 and 2 LEDs** will blink as the operator(s) are running. They can be either ON or OFF when the operator(s) are stopped. One pulse LED for each operator used (Primary/Secondary). **Tracker LEDs** will flash as operator data is sent to the access controller (DoorKing models 1833, 1835, 1837 or 1838 only).

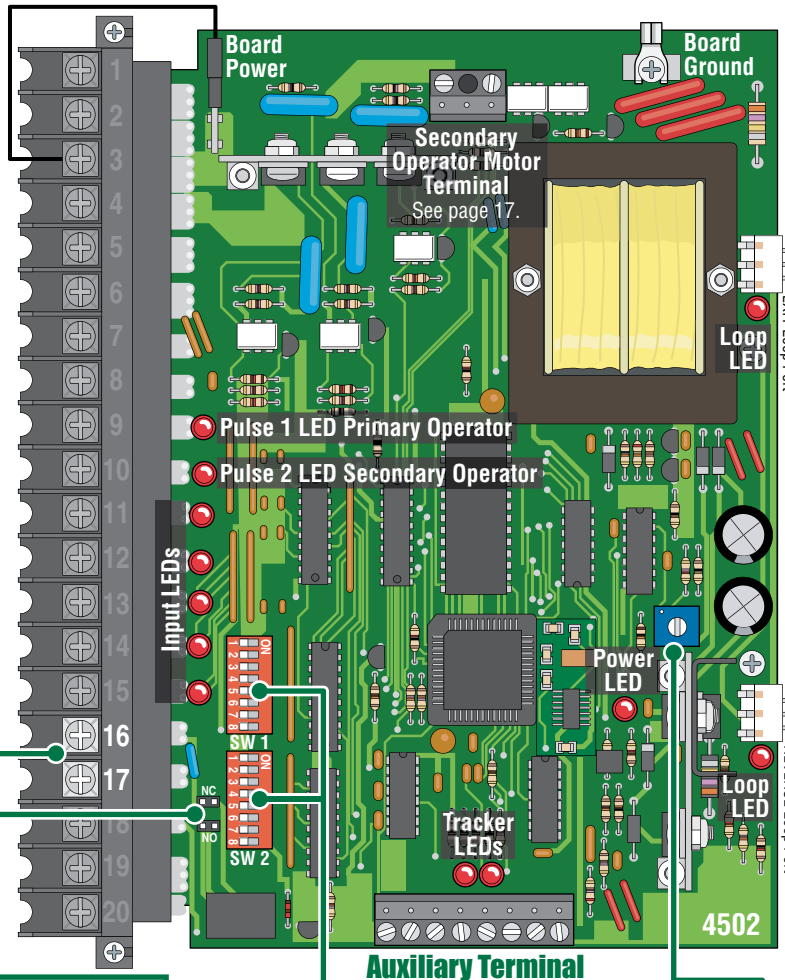

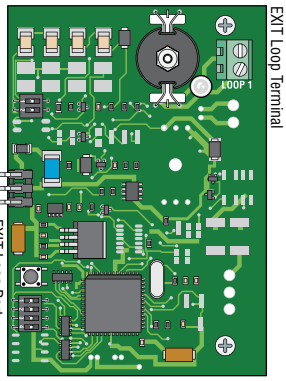

See page 25 for loop info.

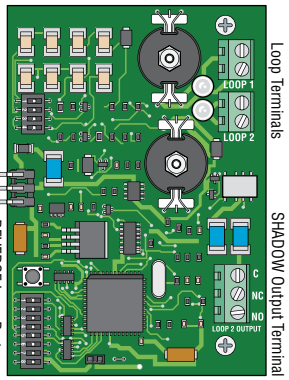

Plug-In Loop Detectors (Sold separately)

Dry Relay Contact

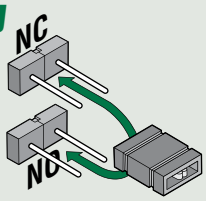

Dry relay contacts (terminals 16-17) can be set for Normally Open (NO) or Normally Closed (NC) operation by placing the relay shorting bar on the N.O. or N.C. pins respectively. (Standard shadow loop function, NO)

DIP-Switches

Set the DIP-switches on the circuit board to the desired setting. See switch-setting charts on next 2 pages.

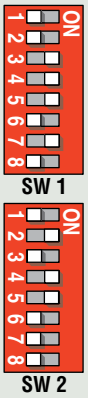

Auto-Close Timer

Auto-close timer (when turned ON) SW 1, switch 4 **ON**.

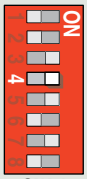

Adjust from 1 second (full counter clockwise) to approximately 23 seconds (full clockwise).

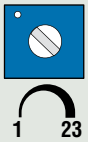

3.2 DIP-Switch SW 1 Settings

The two DIP-switches located on the circuit board are used to program the operator to operate in various modes and to turn on or off various operating features. Whenever a switch setting is changed, power to the operator must be turned OFF and then turned back on for the new setting to take affect. Check and review ALL switch settings prior to applying power to the operator.

⚠ **Every time** the operator is powered up, the **First** open command **will automatically set the open and close limits of the gate.** (See page 21).

SW 1 (Top 8 Switches)			
Switch	**Function**	**Setting**	**Description**
1 and 2	Circuit Board Relay	1-OFF 2-OFF	Relay activates when gate is open (Shadow loop setting when used).
		1-OFF 2-ON	Relay activates when gate is not closed.
		1-ON 2-OFF	Relay activates when gate is opening and open.
		1-ON 2-ON	Relay activates when gate is opening and closing.
3	Exit Loop Port Output	OFF	The output wired to terminal #12 becomes the output from the exit loop detector plugged into the EXIT Loop port.
	Full Open Input	ON	**Normal Setting.** Terminal #12 is a normal full open input.
4	Auto-Close Timer	OFF	Auto-close timer is OFF. Manual input required to close gate.
		ON	Auto-close timer is ON. Adjustable from 1-23 seconds to close gate.
5	Slide Gate	OFF	OFF for Slide gate operator (DO NOT use for 6300).
	Swing Gate	ON	**Normal Setting.** ON for Swing gate operator (Switch MUST be ON for 6300).
6	3-Button	OFF	OFF when using a 3-button station (DoorKing 3-button control stations only).
	Single Button	ON	ON when using a single button control, terminals 13 &14 become a STOP input.
7	Dual Operators	OFF	Switch must be OFF when bi-parting (dual) gates are used.
	Single Operator	ON	Switch must be ON for single operator.
8	Tamper Protect	OFF	Tamper protect is OFF.
		ON	**Normal Setting.** Tamper protect is ON.

Switches 1-2 These work in conjunction with each other and determine when the relay on the board will be activated. This relay can be used as a switch for various functions such as illuminating a warning light when the gate is moving, or turning on a green light when the gate is full open. This relay is **NOT** available for these uses if it is being used for the shadow loop function.

Switch 3 Determines that a device wired to terminal #12 is a normal full open command **OR** terminal #12 becomes the output from the exit loop detector that is plugged into the EXIT Loop port in the circuit board (Used for specialized functions).

Switch 4 Turns the auto close timer on or off. Maximum time that the close timer can be set for is approximately 23 seconds.

Switch 5 This switch enables the 4502 circuit board to be used in either a swing gate or slide gate application. Some older DoorKing slide gate operators did use the 4501 circuit board for control. This switch is here to allow use of this board on these older products.

Switch 6 Sets up the circuit board for single button (ON setting) or 3-button (open-close-stop) (OFF setting) logic (DoorKing 3-button control stations only). Keep this switch in the ON position for single button control. When this switch is ON, terminals 13 and 14 can be used as a Normally Open STOP input.

Switch 7 Sets up the circuit board for single or primary / secondary (dual) gate operation.

Switch 8 If the gate is forced open, the tamper-protect system will start the motor in the close direction when the operator senses the forced open condition.

3.3 DIP-Switch SW 2 Settings

⚠ **Every time** the operator is powered up, the **First** open command **will automatically set the open and close limits of the gate.** (See page 21).

SW 2 (Bottom 8 Switches)			
Switch	**Function**	**Setting**	**Description**
1	**Primary 6300** Changes Gate Opening Direction		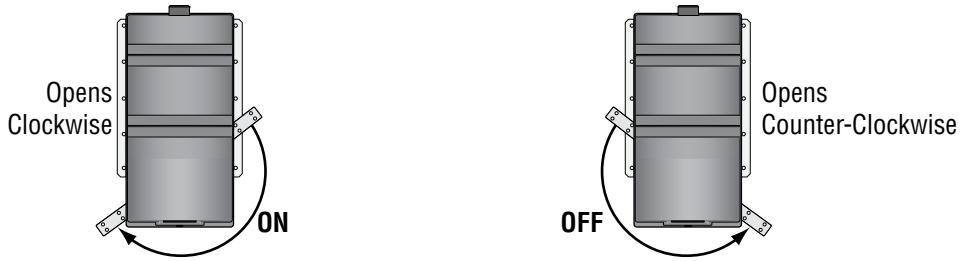
2	**Secondary 6300** Changes Gate Opening Direction		Same as above, for secondary 6300 **ONLY**.
3	Self-Test	OFF	**Normal Setting.** Normal operation.
		ON	Self-test mode. Operator **MUST** be disconnected from gate to run self test.
4	Motor Control for Secondary Operator	OFF	Switch is OFF when both primary and secondary operator motors are powered from main terminals 4 and 5. Applies to operators originally manufactured with 4501, Rev O boards or lower).
		ON	Switch is ON when secondary operator motor is powered from the secondary motor terminals. Applies to operators manufactured with 4501, Rev P boards and higher, **and all 4502 boards.**
5	Reverse Loop	OFF	Terminal 15 is a normal Reverse input.
	Shadow Loop	ON	Terminal 15 is a Shadow input. Gate will **NOT** stop **during** the close cycle.
6	Gate Overlap	OFF	Primary and secondary operators start at the same time.
		ON	Secondary operator starts 1-2 seconds prior to primary operator.
7	Not Used	OFF	Leave in the OFF position.
8	Not Used	OFF	Leave in the OFF position.

Switch 1 **Must OPEN** the primary operator's gate upon initial AC power up and open command. If the **FIRST** open command begins to close the gate, turn AC power off and reverse this switch.

Switch 2 **Must OPEN** the secondary operator's gate upon initial AC power up and open command. If the **FIRST** open command begins to close the gate, turn AC power off and reverse this switch. This switch will be set the opposite of switch 1 (e.g. If switch 1 is OFF, then switch 2 will be ON).

Switch 3 This switch is a self-test feature that checks various functions of the circuit board and is used for bench test only. **Do not run this test with the operator connected to the gate.**

Switch 4 This switch applies high voltage motor power to the secondary operator motor terminal located at the top of the board (See page 17). If a primary / secondary system is in use, this switch should be **ON** and the secondary motor wires connected to the secondary operator motor terminal. For single gate applications, this switch can be turned **OFF**.

Switch 5 This switch sets the input at Terminal 15 to act as a normal reverse input **OR** to act as a shadow input. A shadow input will only hold the gate operator in the open position once it is in the full open position. A shadow input **will not** reverse the direction of the gate operator once it begins its close cycle.

Switch 6 Used in primary / secondary applications, turning this switch ON will cause the secondary operator to start 1-2 seconds before the primary operator. This allows the secondary gate to reach the full closed position before the primary gate, which is desirable when the gates are constructed with an overlap or if a magnetic lock is used to secure the gates.

Switches 7 and 8 Spare switches, leave in the **OFF** position.

3.4 Automatic Open / Close Limit Adjustment

The 6300's open/close limits **DO NOT** have to be physically adjusted. The gate open and close positions are determined by the physical stop "Flange" on the elbow assembly (See below). The arms **MUST** already be in the **correct** closed configuration (See Section 1.7 on page 14). **DO NOT cycle the operator until the arms are in the correct configuration. Every time the operator is powered up, the first open command will automatically run an open and close cycle to locate and remember the gate's open and close positions.**

Timer: The Auto-Close Timer should be turned ON (SW 1, switch 4 **ON**) to allow the operator to run the automatic gate sequence, otherwise a manual close command will be required to complete this sequence.

Clutch: The clutch's factory setting will work correctly for most installations. The clutch must **NOT** slip while the gate is in mid-cycle or the gate limits will be incorrect. If the clutch slips during this period, it must be tightened before running this sequence (See section 3.5 on the next page).

Safety Devices: Run this sequence **before** testing any safety features (primary inherent reverse sensor, secondary entrapment protection, entrapment alarm and reset features).

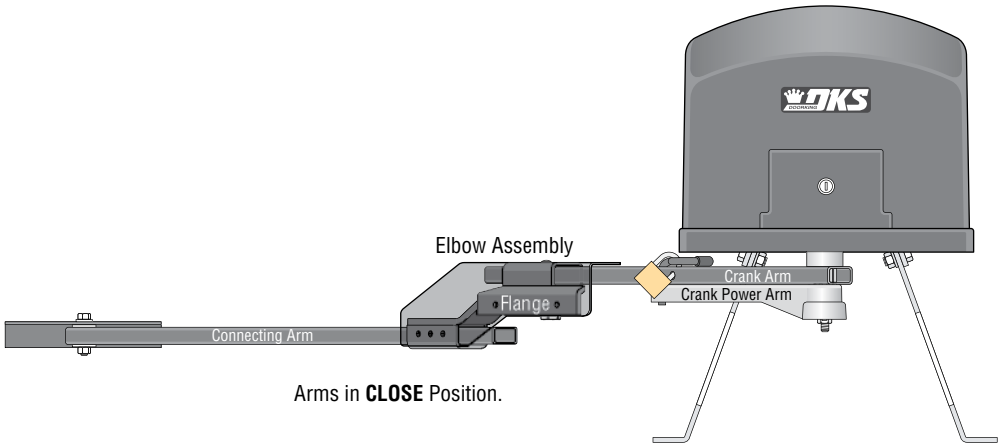

Arms in **CLOSE** Position.

Sequence of Automatic "Gate Cycle" to Set Gate Limits

⚠ CAUTION: Keep pedestrians and vehicles clear of the gate while this sequence is running!

After the first open command is given to the operator (gate can be in any position):

Open

Gate **MUST** open until it contacts the **physical stop "Flange"**. (if gate starts to close, turn power off and change the direction operator opens (SW 2, switch 1). Turn power back on and give open command again). After the gate cycles to the full **OPEN** position, the clutch will slip for approximately 2 seconds and shut off.

Close

Auto-close timer will close the gate until it contacts the **physical stop "Flange"**. (Manual close command required if timer is turned off). When the gate cycles to the full **CLOSE** position, the clutch will slip for approximately 2 seconds and shut off.

Sequence Finished

Open and close gate positions are now set and will be remembered by the 6300 (until it loses AC power). **Gate will function normally** after automatic sequence has finished.

Cycle the operator again. Operator will reach the open and close positions and shut off **without the clutch slipping.**

Note: If gate encounters an obstruction during this sequencing, it will automatically continue after obstruction has been cleared.

3.5 Clutch Adjustment

This vehicular gate operator is equipped with an inherent adjustable clutch (Type C) that is used as the **Primary** entrapment protection system. The clutch **MUST** slip upon sensing an obstruction during the open or close cycle which will cause the gate to reverse direction. For this system to function correctly, the gate must be properly installed and work freely in both directions. A good set of roller bearing hinges is essential for proper swing gate operation.

1. **Be sure AC power switch is turned OFF whenever adjustments to the clutch are being made.** Loosen the upper jamb nut to "un-lock" the lower jamb nut. Loosen the lower jamb nut.
2. Manually move the gate so that it is positioned approximately half way open.
3. Tighten the lower jamb nut finger tight then tighten it **ONE** turn with a wrench. Re-tighten the upper jamb nut.
4. Turn AC power switch ON and momentarily jump across terminals 11 and 20. When the gate begins to open, determine if the clutch is slipping. If the clutch is slipping, turn AC power OFF and tighten the lower jamb nut **one more turn**. This process may have to be repeated several times to get the clutch adjusted correctly. **Always start the gate from the half open position when adjusting the clutch.**

Clutch Note: The ideal clutch adjustment will allow the operator to move the gate through its open and close travel cycle **without** slipping, but **will** slip upon contact with an obstruction with **no more than 40 Lbs of force**. This force can be measured with a gate scale, DoorKing P/N 2600-225.

CAUTION: Keep pedestrians and vehicles clear of the gate while adjusting and testing the clutch!

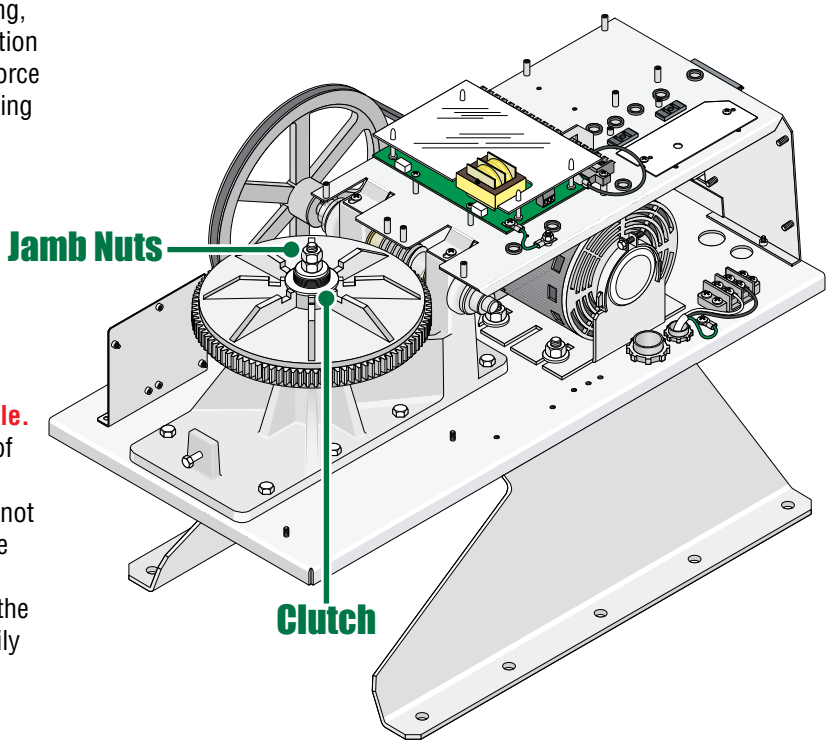

Test the Clutch:

Obstruct the gate while it is in the OPENING cycle.
The clutch **MUST** slip with no more than 40 Lbs of force, then the gate will reverse direction for a quarter of a second and **STOP**. If the clutch does not slip, it is too tight. Repeat step 4 and re-adjust the clutch.
Note: After the gate has reversed and **STOPPED**, the operator will be in a "Soft Shutdown". Momentarily jump across terminals 11 and 20 to continue the opening cycle after the obstruction has been cleared.

Obstruct the gate while it is in the CLOSING cycle.
The clutch **MUST** slip with no more than 40 Lbs of force, then the gate will **REVERSE** direction back to the open position. If the clutch does not slip, it is too tight. Repeat step 4 and re-adjust the clutch.
Note: After the gate has **reversed** back to the open position, the operator will be in a "Soft Shutdown". Momentarily jump across terminals 11 and 20 to start the closing cycle again after the obstruction has been cleared.

3.6 Inherent Entrapment Protection System

In addition to the mechanical slip clutch, this operator uses an inherent entrapment protection system (Type A) to further reduce the possibility of injury should an entrapment occur. This **Secondary** entrapment protection system (Revering sensor) is **completely automatic** and will be activated **if the clutch fails to slip when an obstruction is sensed** during the open or close cycle. This feature requires **no adjustment** by the installer or end user.

SECTION 4 - ENTRAPMENT AND SAFETY PROTECTION

Secondary Entrapment Protection Device:
In addition to the inherent reversing sensor system, the Model 6300 has terminal connections for **photo sensors**-Type B1 secondary entrapment protection device required by UL 325 standards. Entrapment protection devices **must be installed** to reduce the risk of injury. Install these devices where the risk of entrapment or a hazard exists while the gate is moving. Specific installations will vary.

4.1 Main and Auxiliary Terminals Description

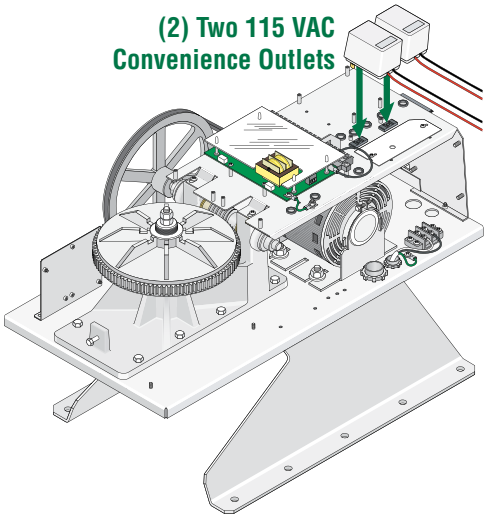

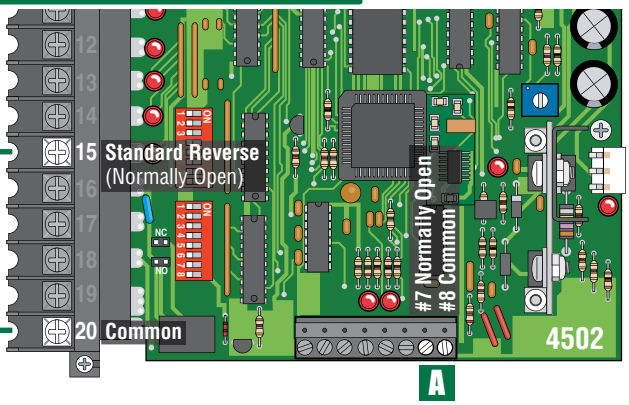

Main Terminal #15 and #20 CLOSE Direction Photo Sensor

Auxiliary Terminal #7 and #8 OPEN Direction Photo Sensor

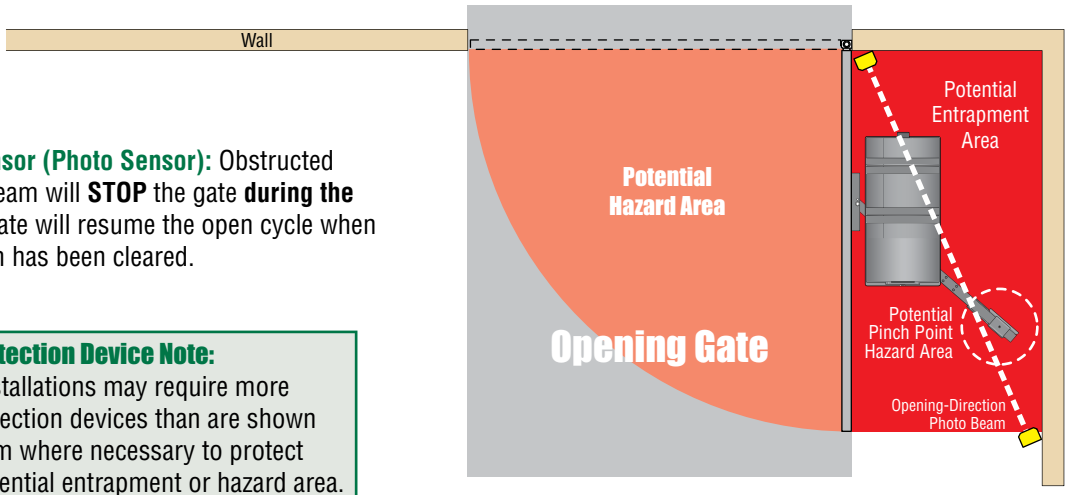

A OPEN Entrapment Sensor (Photo Sensor): Obstructed opening-direction photo beam will **STOP** the gate **during the opening-direction only.** Gate will resume the open cycle when the obstructed photo beam has been cleared.

> **Entrapment Protection Device Note:**
> Specific gate installations may require more entrapment protection devices than are shown here. Install them where necessary to protect against **ANY** potential entrapment or hazard area.

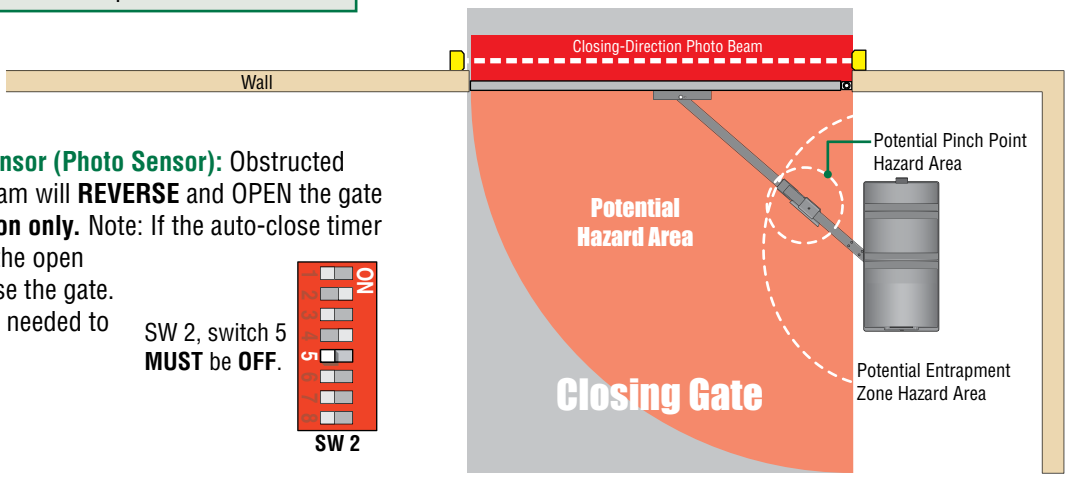

B CLOSE Entrapment Sensor (Photo Sensor): Obstructed closing-direction photo beam will **REVERSE** and OPEN the gate **during the closing-direction only.** Note: If the auto-close timer is **ON**, when gate reaches the open position, timer will not close the gate. Another input command is needed to reset and close the gate.

SW 2, switch 5 **MUST** be **OFF**.

4.2 Entrapment and Safety Protection Device Locations

Typical UL Photo Sensor mounting height and distance away from gate.

Closing-Direction Photo Sensors

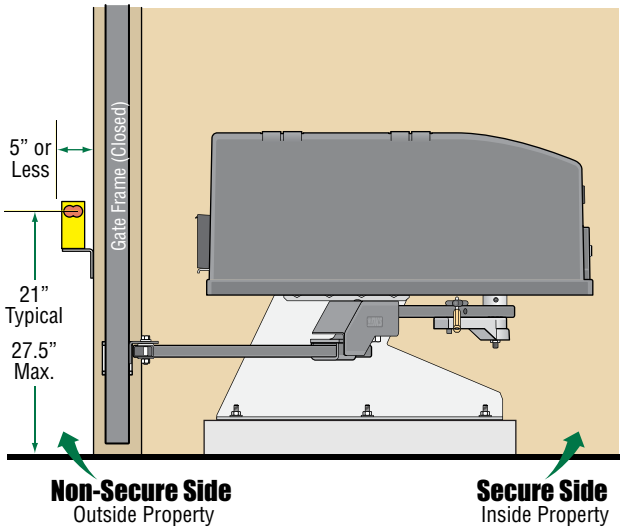

Opening-Direction Photo Sensors

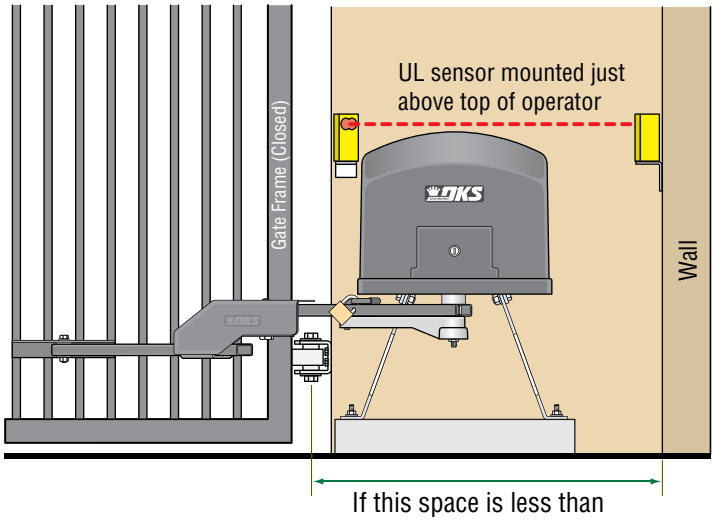

If this space is less than 16 inches, secondary entrapment protection is required in this area.

Photo Sensors Sample Setup

This diagram is for illustration purposes. The actual placement of the protection devices is dependent on the specific installation requirements.

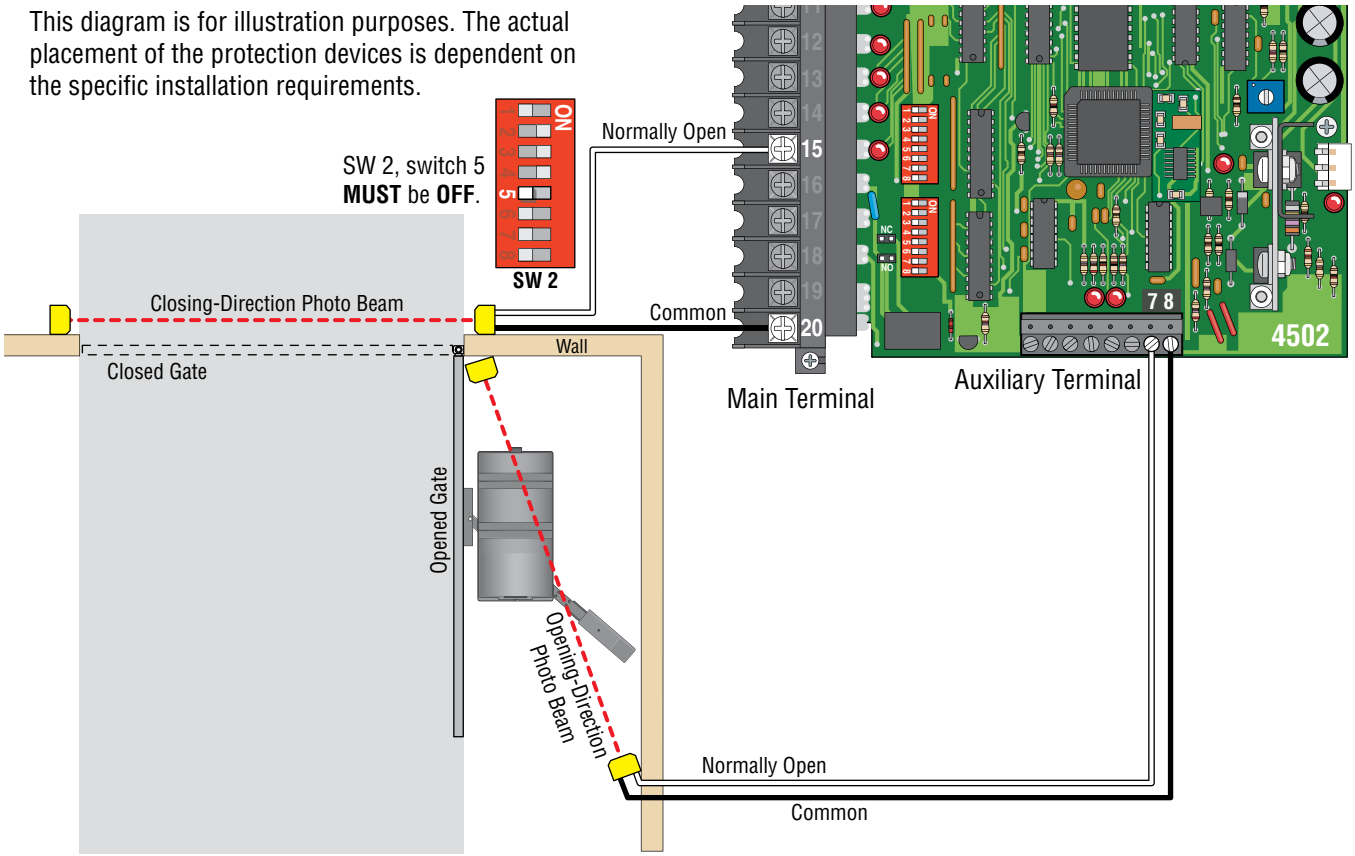

Photo Sensor Power Note: Photo sensors can be powered by Model 6300. See previous page for the built-in 115 VAC convenience outlets location.

4.3 Loop Detector Wiring

To help protect the operator from accidentally closing on vehicles in the gate's path, DoorKing highly recommends that loops and loop detectors be installed. Loops are laid underneath, cut into asphalt or concrete driveways or buried beneath gravel and earth driveways. A loop detection system will sense a vehicle like a metal detector and send a signal to the gate operator preventing the gate from automatically opening or closing on a vehicle when it is in the gate's path. DoorKing recommends that a licensed installer perform this work.

- Loop detector wiring is shown for DoorKing plug-in loop detectors. If other loop detectors are used, refer to the installation instructions supplied with those detectors for wiring instructions.
- If other detectors are used, use a separate power supply to power these detectors.
- Loop layout shown is for a typical swing gate application with two-way traffic, or one-way exit only traffic.

DoorKing offers a free "**Loop and Loop-Detectors Information Manual**" PDF located at DoorKing's web site for more information. www.dkaccess.com

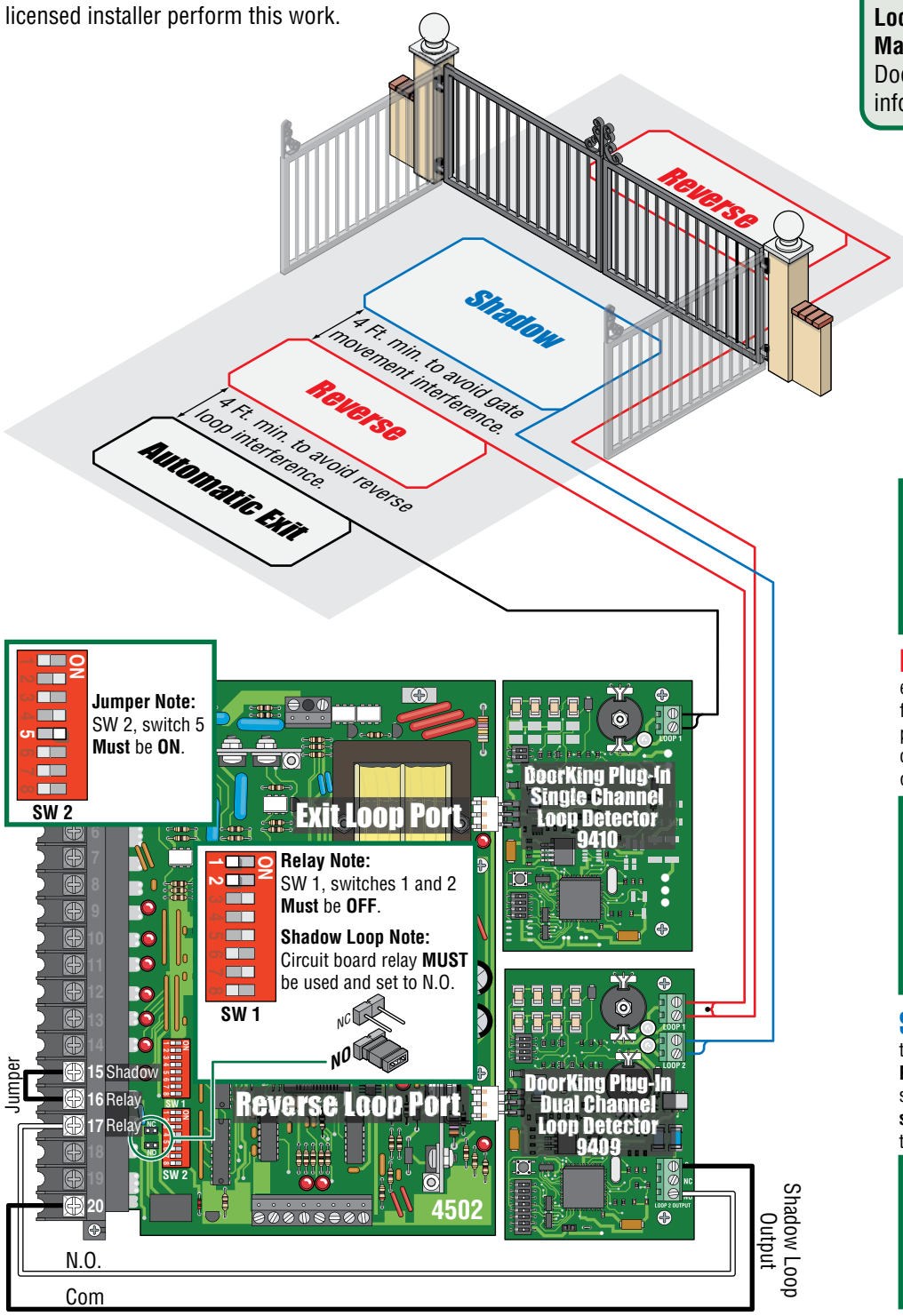

Automatic Exit Loop

Automatically opens the gate for exiting vehicles without having to use a transmitter or keypad. The exit loop can be placed a minimum of 4 feet away from the reverse loop or far enough away from the gate so the gate has started opening or even completely opened by the time you drive up to it (Free exit).

Automatic exit loop lead in wires are twisted approx. 6 twists per foot.

Reverse Loops are placed on each side of the gate to prevent the gate from closing on a vehicle in the gate's path. They will stop or reverse the cycling of the gate while a vehicle is in or near the gate's pathway.

Reverse loop lead in wires are twisted approx. 6 twists per foot and are wired in series.

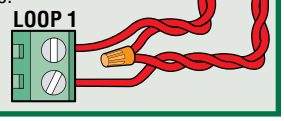

Shadow Loop will **ONLY HOLD** the main gates in the **Full Open Position** when a vehicle is on the shadow loop. However, it **WILL NOT stop or reverse** the main gates once they start to close.

Shadow loop lead in wires are twisted approx. 6 twists per foot.

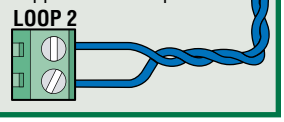

SECTION 5 - CIRCUIT BOARD WIRING

5.1 Main Terminal Description

DANGER
HIGH VOLTAGE!

- When gate is closed, input will open gate.
- When gate is open and auto close timer SW 1, switch 4 is turned **ON**, input will re-set and hold timer.
- When gate is open and auto close timer SW 1, switch 4 is turned **OFF**, input will close gate.
- When gate is closing, input will **reverse** gate.

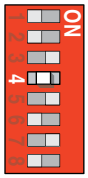

- If SW 1, **switch 3** is **ON**, functions as a normal full open input (Normal setting).
- If SW 1, **switch 3** is **OFF**, input to terminal #4 becomes the output from the EXIT loop detector plugged into the EXIT loop port. (Used for specialized functions).

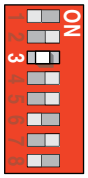

This input ONLY functions when gate is **fully opened** or in the **closing cycle**.

- When gate is closing: SW 2, **switch 5** is **OFF,** an input to terminal #15 (e.g.: photo beam gets obstructed) will **reverse** and open the gate. **Note:** If the auto-close timer is **ON**, when gate reaches the open position, timer **will not** close the gate. Another input command is needed to reset and close the gate.
- When gate is closing: SW 2, **switch 5** is **ON,** an input to terminal #15 (e.g.: photo beam gets obstructed) has **NO** effect on the gate operator (Set for **Shadow** input).

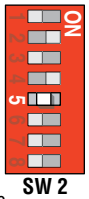

Operation of the circuit board dry relay contact is dependent on setting of SW 1, **switches 1 and 2**.
Relay contacts can be set for Normally Open (NO) or Normally Closed (NC) operation.

Contact rating is 1 amp maximum at 24-volts DC.

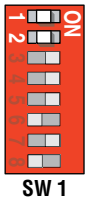

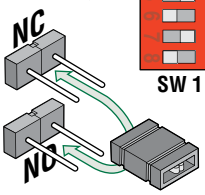

24-volt DC magnetic lock power is provided constantly except when the gate is **opening** or **open** (Normally Closed function). 1 Amp Max.

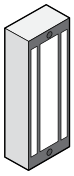

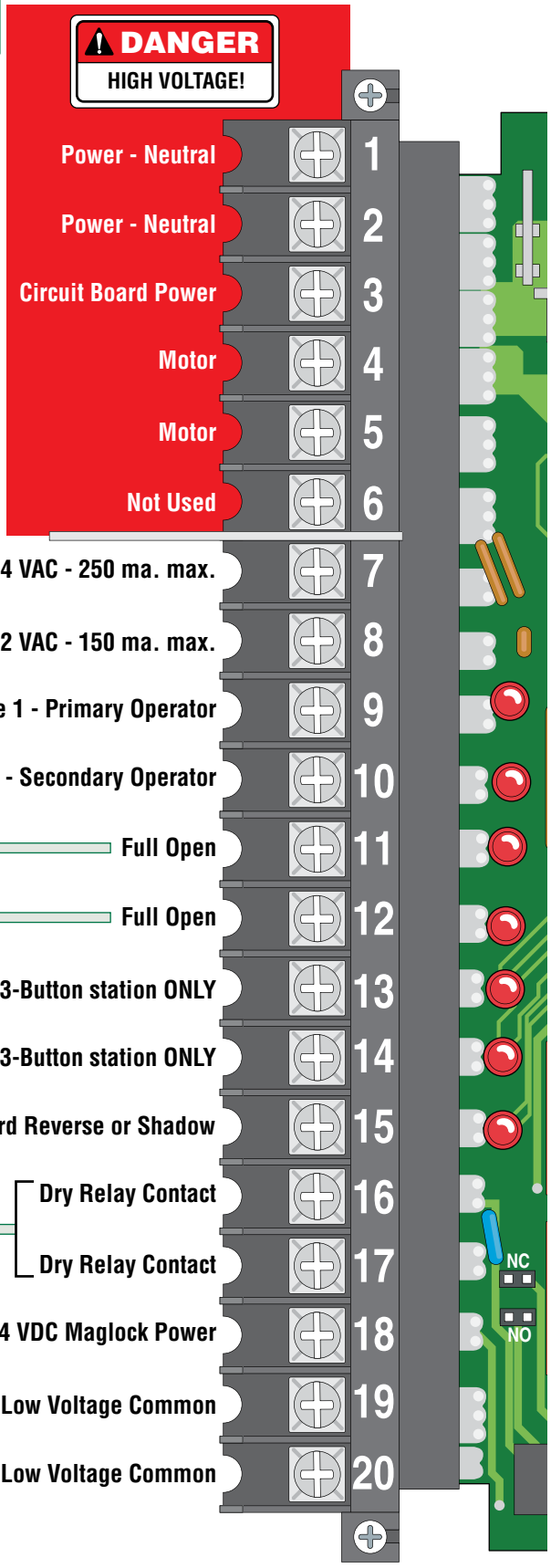

5.2 Control Wiring

Important: Controls must be installed a minimum of 10-feet from the gate or installed in such a way that the person using the control cannot come in contact with the gate or gate operator.

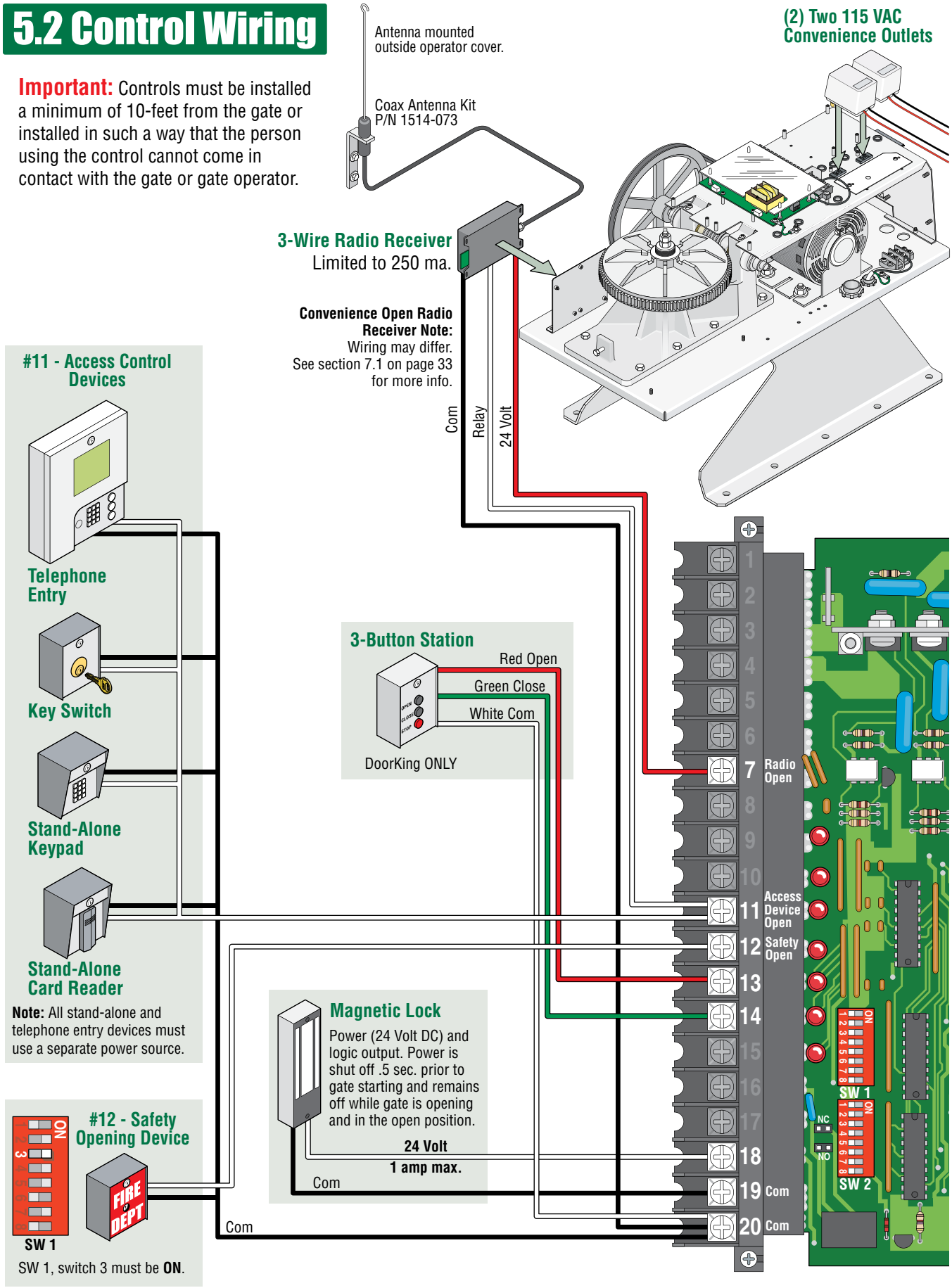

5.3 Auxiliary Terminal Description

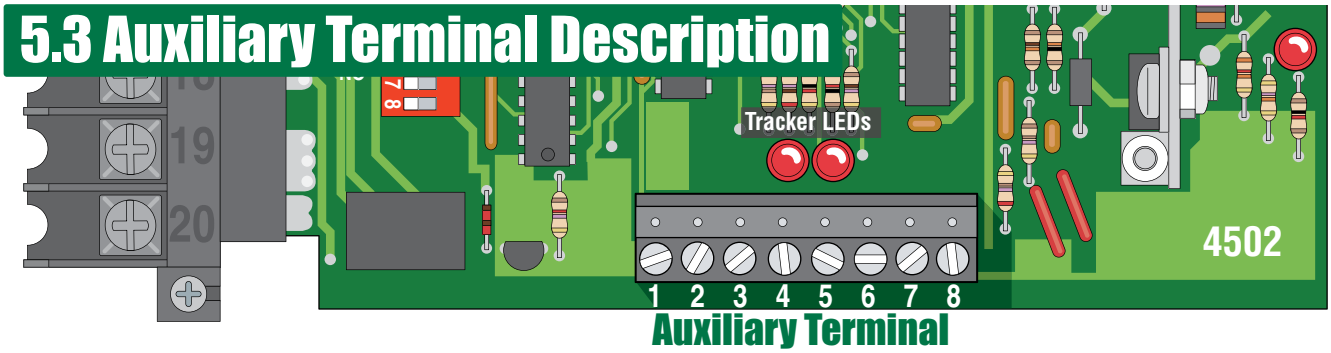

1. **Alarm Output:** Provides power to activate the entrapment alarm.
2. **Alarm Reset Input:** Input to reset the operator after an entrapment alarm.
3. **Common:** Common for alarm output and alarm reset input.
4. **Tracker Data:** Supplies gate operator data to Tracker expansion board (P/N 2351-010). Refer to the Tracker Installation and Wiring Manual for detailed information.
5. **Tracker Data:** Supplies gate operator data to Tracker expansion board (P/N 2351-010). Refer to the Tracker Installation and Wiring Manual for detailed information.
6. **Tracker Data:** Supplies gate operator data to Tracker expansion board (P/N 2351-010). Refer to the Tracker Installation and Wiring Manual for detailed information.
7. **Non-Contact Sensor (Photo Sensor Input):** This input will cause the gate operator to **stop** when activated in either the opening or closing cycles. The gate operator will remain stopped until the photo-beam input is cleared, at which time the operator will resume normal operation (See pages 23 and 24).
8. **Common:** Common for photo sensor input.

5.4 Auxiliary Terminal Wiring

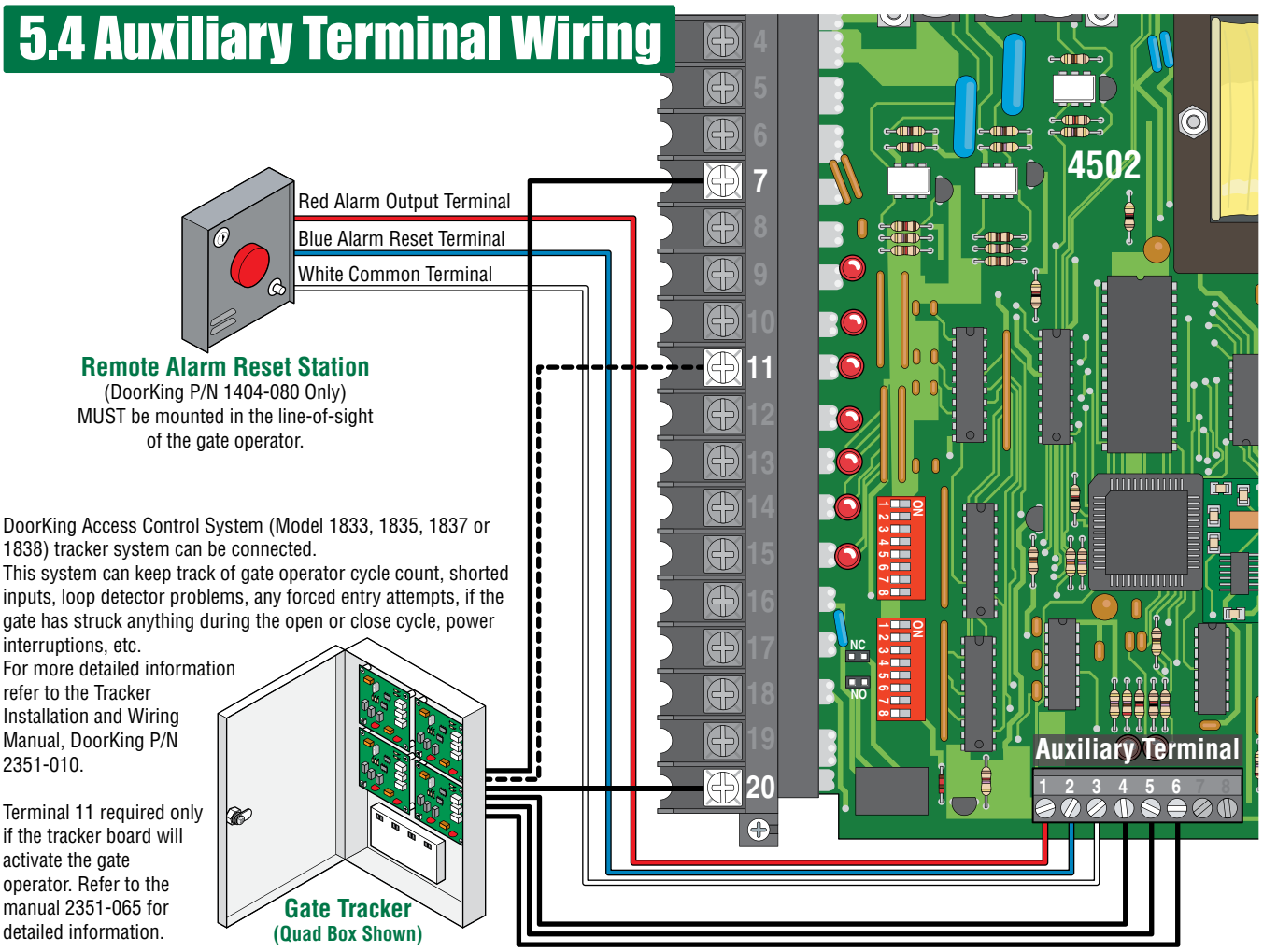

SECTION 6 - OPERATING INSTRUCTIONS

IMPORTANT SAFETY INSTRUCTIONS

WARNING - *To reduce the risk of injury or death:*

1. READ AND FOLLOW ALL INSTRUCTIONS.
2. Never let children operate or play with gate controls. Keep the remote control away from children.
3. Always keep people and objects away from gate. **NO ONE SHOULD CROSS THE PATH OF THE MOVING GATE**.
4. Test the operator monthly. The gate MUST reverse on contact with a rigid object or stop or reverse when an object activates the non-contact sensors. After adjusting the force or the limit of travel, retest the gate operator. Failure to adjust and retest the gate operator properly can increase the risk of injury or death.
5. Use the emergency release only when the gate is not moving and power has been shut-off.
6. KEEP GATES PROPERLY MAINTAINED. Read the owner's manual. Have a qualified service person make repairs to gate hardware.
7. The entrance is for vehicles only. Pedestrians must use separate entrance.
8. **SAVE THESE INSTRUCTIONS**.

6.1 Power and Reset Switches

Unlock the power switch cover and open to access the MAIN POWER, DC POWER and the operator RESET switch.

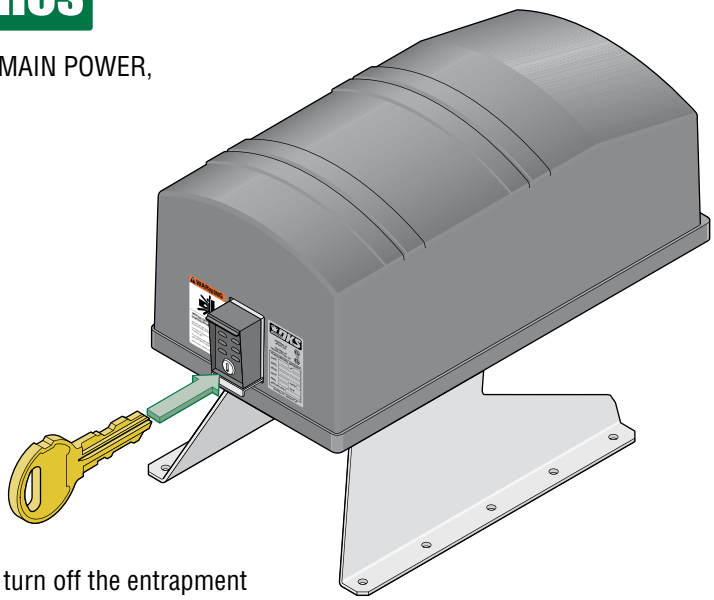

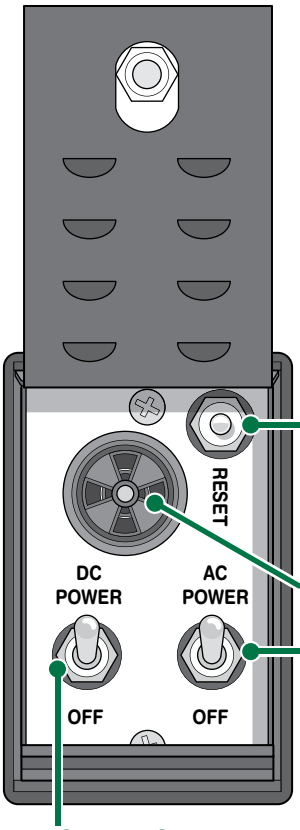

Reset Switch - Used to turn off the entrapment alarm and to reset the operator after a hard shutdown has occurred.

Alarm Siren

AC Power Switch - Powers the operator ON (toggle up) or OFF (toggle down).

DC Power Switch - Turns the DC system power ON (toggle up) or OFF (toggle down). This switch is only installed on model 6300 operators with the DC convenience open system installed.

6.2 Shutdown Conditions

Under various entrapment conditions the operator will assume either a **soft** or **hard (alarm)** shutdown. To determine what type of reset action is required, you will need to understand how the different entrapment conditions affect the gate operator.

Soft Shutdown

This occurs in various situations where the inherent or secondary entrapment protection devices have been activated. In a soft shutdown condition, the operator **will not** respond to any input that was present when the entrapment protection device sensed an obstruction. If the gate stops at the open position, the operator will not respond to the automatic close timer.

- **Example 1** - A time clock keys the gate open in the morning and an entrapment protection device senses an obstruction prior to the gate reaching the full open position. If the entrapment is sensed by the inherent system, the gate will reverse and run back to the closed position. The time clock input is still present, but the gate will not re-open.

Note: In some systems, the time clock input comes from the telephone entry system relay. This same relay may also provide open commands for a card reader, MicroPLUS transmitters and the visitor telephone entry. If so, these devices will also be disabled in a soft shutdown condition.

- **Example 2** - If the gate is closing and an entrapment protection device is activated, the gate will either stop or reverse and run back to the open position, depending upon if the secondary or inherent device was activated. The automatic close timer will not close the gate.

- **Example 3** - Vehicle arrives at open loop and gate runs towards the open position. The inherent entrapment protection is activated. The gate reverses and runs back to the closed position. If the vehicle is still present at the open loop a soft shutdown condition does not occur. The loop input provides an immediate reset of the operator and the gate will again run to the open position.

Resetting a Soft Shutdown

In some conditions, a soft shutdown will reset as soon as the entrapment condition clears. For example, if a non-contact sensor (photo cell) is sensing an obstruction, the operator will stop the gate and assume a soft shutdown condition. When the photocell clears, the operator will return to normal operation.

When the operator is in a soft shutdown, activation of any "intended input" will reset the operator. An "intended input" includes any command, any standard safety input and any loop input. Activating any of these inputs will reset the gate. At that point the gate will return to normal operation. If the gate is open, the automatic close timer will then time out and close the gate.

Hard Shutdown (Alarm Activated)

A hard shutdown condition occurs when the inherent entrapment protection system has sensed two consecutive obstructions before the gate reaches the full open or closed position.

- **Example** - The gate is closing and the inherent entrapment protection system senses an obstruction and causes the gate to reverse direction. As the gate begins to run in the open direction, a second obstruction is sensed prior to the gate reaching the full open position. Once the second obstruction has been sensed, the operator will stop, the audio alarm will be activated and all standard inputs are shut down (including open commands, safety commands, loop inputs, etc.).

The audio alarm will sound for five minutes, or until the operator's reset button is pushed. After (5) five minutes the alarm will "chirp every 5 sec." and the hard shutdown condition will remain in affect until the reset button is pushed.

- After 5 minutes, the audio alarm will "chirp" every 5 seconds. This indicates that the operator is in a hard shutdown condition and the reset switch must be activated to reset the operator and silence the alarm.

Continued on next page

Resetting a Hard Shutdown

When the operator is in a hard shutdown condition (audio alarm activated or audio alarm “chirps” every 5 seconds), the only way to reset the gate operator and return it to normal operation is to activate the alarm reset input (auxiliary terminals 2 and 3). An alarm-reset switch can be mounted external of the gate operator provided that it is installed in the line of sight of the gate and gate operator.

- Before resetting a hard shutdown, determine why the shutdown occurred. Inspect the gate for any obstructions along its path that could have activated the inherent entrapment sensing system. Inspect the gate and gate hardware.

Note: DoorKing operators have a built-in alarm reset push button mounted on the operator above the power ON-OFF toggle switch. Activating this button will return the gate operator to normal operation, but will not activate the gate operator.

Once the gate has been reset, an open or close command is needed to start the gate operator. Most activating commands will cause the gate operator to cycle to the open position. This includes activation of a key switch or open command and activation of an open loop. Activation of a close command will run the gate to the closed position.

Note: The gate operator will not lose its limit settings when a hard shutdown occurs.

6.3 Manual Gate Operation

This operator is equipped with a manual release system that will allow the gate to be pushed open in the event of a power outage or equipment failure.

Never attempt to manually push open any gate with an operator attached to it until you have verified that power to the operator has been shut-off.

Emergency Vehicle Access Conditions

The automatic vehicular gate system must be designed to allow access to emergency vehicles under different operating conditions.

1. During normal powered operation, emergency vehicles access the gate by use of the **Emergency Vehicle Access Device** installed on your gate system. The type of device that is used in your community is dependent on your city codes. These devices may include (but are not limited to) Fire Department lock boxes, Click-2-Enter radio receivers, strobe light sensors, siren sensors, etc.

Convenience Open

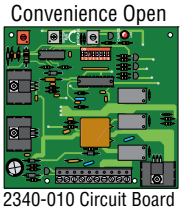

2340-010 Circuit Board

2. In the event of a power failure, the emergency vehicle access device may not be functional because the gate operator is un-powered. If the gate operator is equipped with a **Convenience Open System**, this system will automatically open the gate when primary (AC) power is removed. NOTE: DC convenience open systems are optional and your gate system may or may not be equipped with one. Check with your installer to determine if your gate system is equipped with a convenience open system.

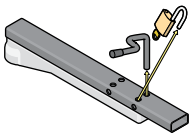

3. In the event of a primary (AC) power failure and a back-up system (DC) power failure (low charged or dead batteries for example), the system must have a release system to allow the gate to be **Manually Operated**.

FAIL-SAFE Manual Operation

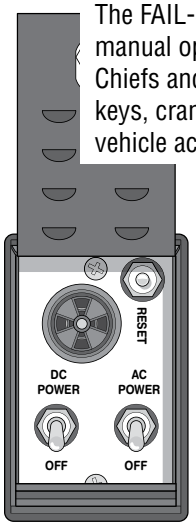

The FAIL-SAFE manual operation system is the most reliable and safest method for placing an automated gate in manual operation and is the preferred method of emergency gate operation under worse case conditions by many Fire Chiefs and Building Inspectors and is typically used in CLASS I and CLASS II applications. This system requires no keys, cranks or tools for manual gate operation and is completely automatic. This prevents any delays for emergency vehicle access in the event that a power outage has occurred.

- When AC power is removed (power failure or switch power off), the operator "FAILS" in a "SAFE" condition allowing the gate to be manually pushed open **without** the need of any tools, keys, cranks or other devices. This assures emergency vehicle access under the worst-case conditions.
- **For manual FAIL-SAFE gate operation,** turn power to the operator OFF. If a convenience open system is in use, be sure that DC power is turned OFF **first**. Once **ALL** power is OFF, the gate can be manually operated.

1 **Pull the gate crank arm** (arm that is attached to the operator shaft) away from the gate so the arms are not in a straight line.

2 **Go to the end of the gate and pull it open.**

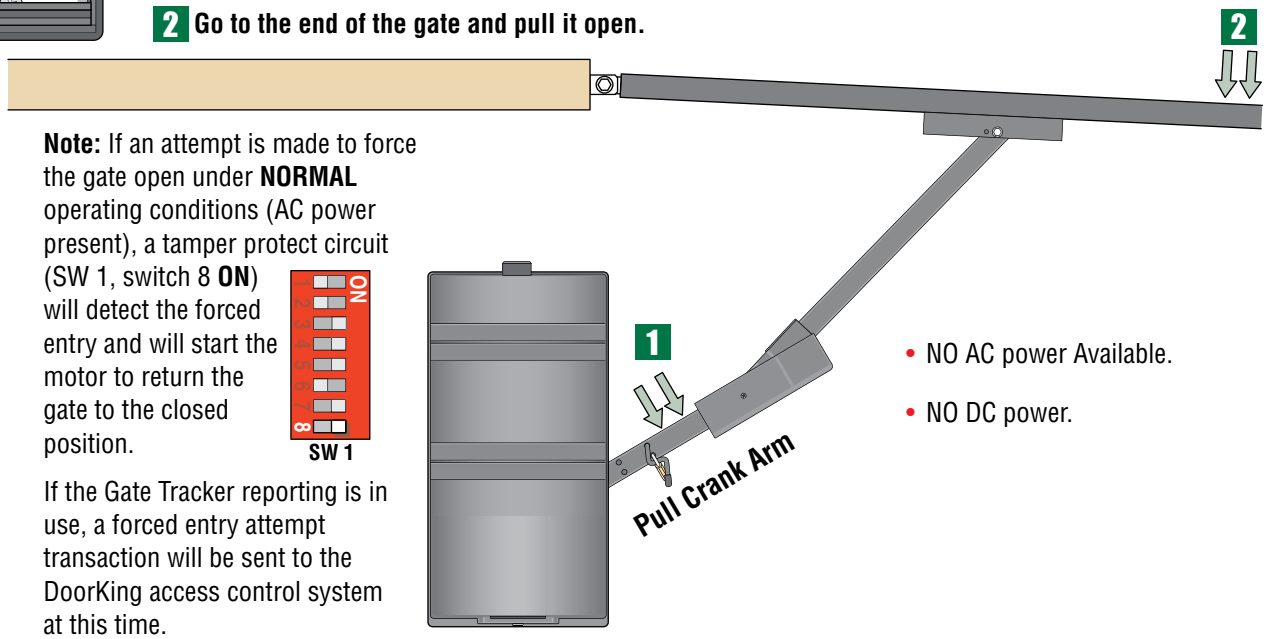

Note: If an attempt is made to force the gate open under **NORMAL** operating conditions (AC power present), a tamper protect circuit (SW 1, switch 8 **ON**) will detect the forced entry and will start the motor to return the gate to the closed position.

SW 1

If the Gate Tracker reporting is in use, a forced entry attempt transaction will be sent to the DoorKing access control system at this time.

- NO AC power Available.
- NO DC power.

Manual Release

In addition to FAIL-SAFE manual operation, this operator also employs a locked release pin to place the gate in manual operation when primary (AC) power is removed.

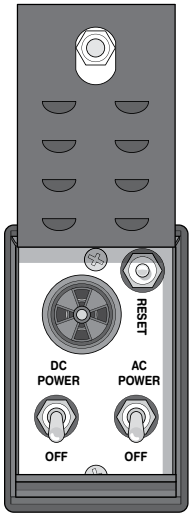

To Manually Release Arm, turn AC power to the operator OFF. If a convenience open system is used, be sure to turn OFF DC power **BEFORE** turning OFF AC power.

Remove padlock and locking pin from crank arm and gate can be manually operated. Crank Power Arm will remain stationary during gate movement.

- NO AC power.
- NO DC power.

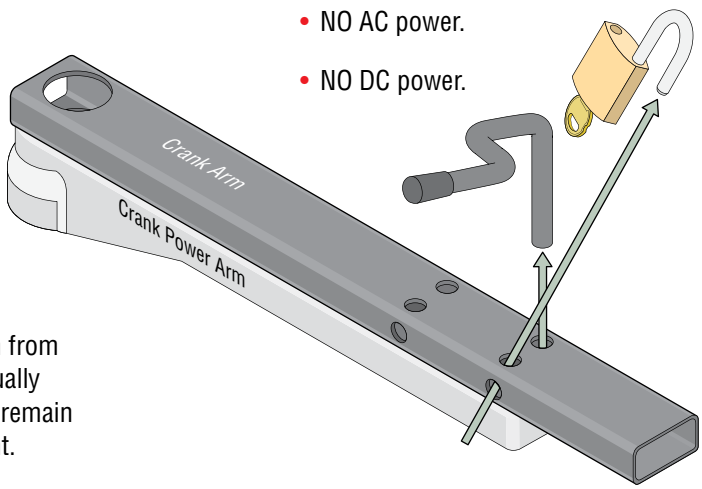

SECTION 7 - OPTIONAL CONVENIENCE OPEN SYSTEM

The optional convenience open system installed in your vehicular gate operator is designed as a convenience enhancement only. It is not designed or intended to provide continuous gate operation during a power outage. Its sole purpose is to provide a method to open the vehicular gate to allow unimpeded traffic flow when the gate and access control system is without power. If your access control system requires 100% power backup and continuous operation when primary (AC) power has failed, a power inverter / backup system, such as DoorKing's Model 1000 or Model 2000, is required.

- The convenience open system cannot provide continuous gate operation during a power outage.
- **The gate will cycle (Manual or Automatic Mode) to the open position ONE TIME ONLY after AC power failure.**
- The convenience open system requires testing on a monthly basis to insure the batteries are fully charged and that the system is operational.
- The convenience open system uses two 12-volt, 3.0 amp-hour gel-cell batteries. These batteries should be replaced every two years on average, or sooner if required.
- Batteries are affected by temperature. Cold temperatures will reduce the effectiveness of the batteries. High temperatures will result in a shortened battery life.
- Batteries are not covered under warranty.

7.1 Circuit Board 2340 Setup

Timer: **MUST** be adjusted so the **gate stops approximately six inches from the full open position.** Clockwise increases the DC motor run time, counter-clockwise decreases the run time. **Do not allow the DC motor to run long enough to slip the operator clutch or stall the DC motor. Damage to the circuit board may result from this condition!**

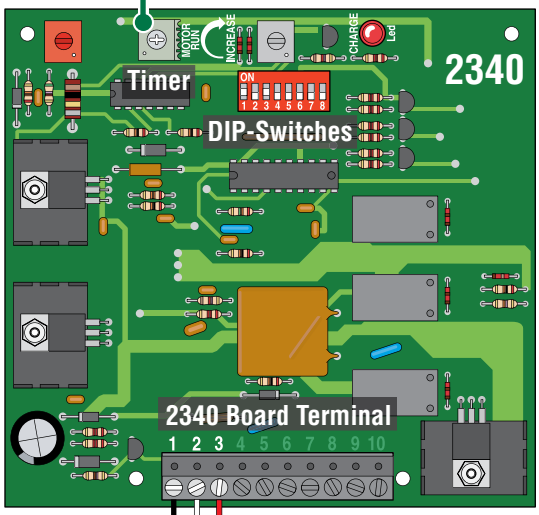

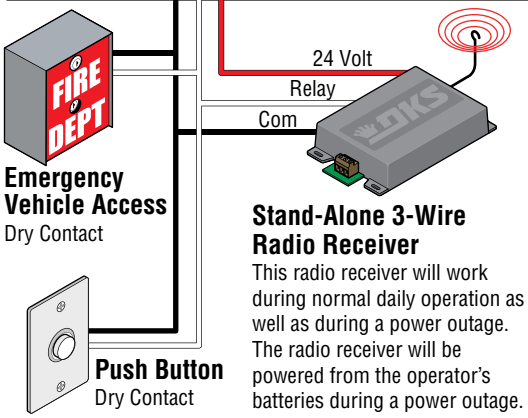

Manual Mode Device Connection

Automatic Mode after loss of AC Power, Switch 1 ON

The system will automatically open the gate approximately 3 seconds after loss of AC power (The timer will run the DC motor). Automatic mode is **always** used for gates in general access applications such as gated communities, apartment complexes, etc.

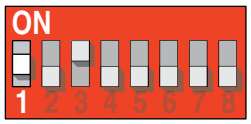

Manual Mode after loss of AC Power, Switch 1 OFF, Residential Use ONLY.

The system will **NOT** automatically open the gate after loss of AC power. A manual input is needed (Remote, push button or a key switch) to open the gate from one of the "Manual Mode Devices" **physically** wired to the 2340 circuit board (The timer will run the DC motor). Any control devices wired to the 4502 main terminal will **NOT** function after loss of AC power.
Note: If the gate operator is controlled by a DoorKing access controller (Models 1833, 1835, 1837 or 1838), the "Manual Mode" will **NOT** function during a power outage.

Restart Options once AC Power is restored, Switch 3

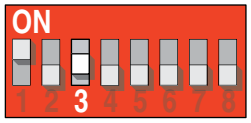

Once AC power is restored, the system's control board can be set to "**automatically re-key**" the gate operator (switch 3 **ON**) to establish normal operation, or can be set to require a "**manual input**" from the 2340 **OR** 4502 circuit board (switch 3 **OFF**) before the operator resumes normal operation.

7.2 DC System Description

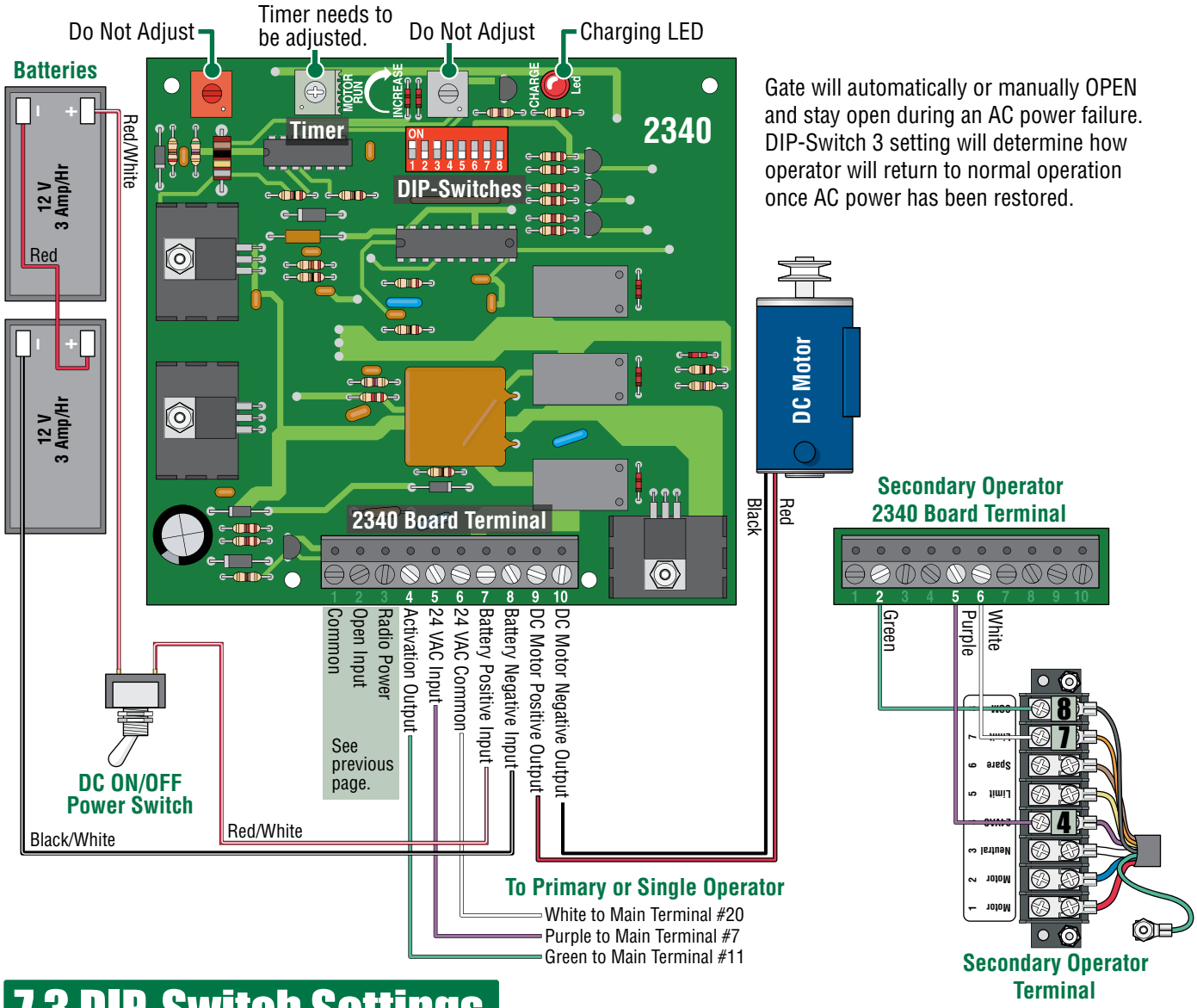

Gate will automatically or manually OPEN and stay open during an AC power failure. DIP-Switch 3 setting will determine how operator will return to normal operation once AC power has been restored.

7.3 DIP-Switch Settings

Switch	Function	Setting	Description
1	Power Failure Operating Modes	OFF	Manual input from 2340 board needed to open gate when a power outage occurs.
		ON	Gate will automatically open when a power outage occurs.
2	Changes Arm's Opening Direction	OFF	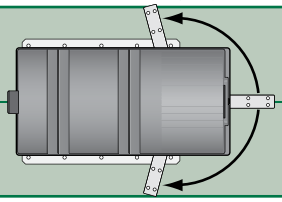 Opens Counter-Clockwise using **OFF** setting.
		ON	Opens Clockwise using **ON** setting.
3	Restored AC Power Operator Response	OFF	When AC power is restored, a manual input (push button, loop, radio receiver, etc.) is required to return the gate to normal operation from 2340 or 4502 board.
		ON	When AC power is restored, a 1-second pulse is sent to the gate operator input to automatically restore normal operation.
4	Operator Type	**OFF**	Must be in the **OFF** position for the 6300.
5-8	Not Used	**OFF**	Must be in the **OFF** position.

SECTION 8 - MAINTENANCE AND TROUBLESHOOTING

Inspection and service of this gate operator by a qualified technician should be performed anytime a malfunction is observed or suspected. High cycle usage may require more frequent service checks.

8.1 Maintenance

When servicing the gate operator, always check any secondary (external) reversing devices (loops, photo eyes, etc.) for proper operation. If external reversing devices cannot be made operable, do not place this operator in service until the malfunction can be identified and corrected.

Always check the inherent reversing system when performing any maintenance. If the inherent reversing system cannot be made operable, remove this operator from service until the cause of the malfunction is identified and corrected. Keeping this operator in service when the inherent reversing system is malfunctioning creates a hazard for persons which can result in serious injury or death should they become entrapped in the gate.

When servicing this gate operator, always turn power **OFF!!**

⚠ **Every time** the operator is powered up, the **First** open command **will automatically set the open and close limits of the gate.** (See page 21).

Operator Component	Maintenance	Monthly Interval		
		3	6	12
Alarm	Activate the primary (inherent) reverse system by blocking the gate with a solid object. When the gate reverses, block the gate in the opposite direction prior to the limit being reached. The entrapment alarm should activate. Press the reset button to silence the alarm.	✓		
Arms	Check set screws and nuts. Check bushings for wear.		✓	
Batteries	If operator is equipped with optional DC open system, check the batteries for any leakage or loose connections. Batteries should be replaced every two years.	✓		
DC Open System	If operator is equipped with optional DC open system, check to be sure the system opens the gate upon loss of AC power.	✓		
Drive Belt	Check for alignment, tightness and wear.		✓	
Fire Dept.	Check emergency vehicle access device for proper operation.	✓		
Gate	Inspect for damage. Check gate hinges for wear and grease if necessary.		✓	
Gear	Inspect for wear. Grease if necessary. Use only EP Molybdenum Disulfide (Moly D) grease (DoorKing P/N 2600-770)		✓	
Grease	Main shaft zert fitting.		✓	
Primary Reverse System	Check that the gate reverses on contact with an object in both the opening and closing cycles. Adjust the clutch if necessary.	✓		
Loop(s)	Check vehicular reverse and shadow loops for proper operation.	✓		
Release	Check manual release for proper operation.	✓		
Secondary Reverse Device	Check secondary (external) reverse device(s) stop or reverse the gate when activated.	✓		
Worm Gear	Inspect for wear and proper alignment.		✓	
Complete System	Complete check of gate and gate operating system.			✓

8.2 Troubleshooting

Have a good VOM meter to check voltages and continuity. A Meg-Ohm meter capable of checking up to 500 meg-ohms of resistance is necessary to properly check the integrity of the ground loops. When a malfunction occurs, isolate the problem to one of three areas: 1) the operator, 2) the loop system, 3) the keying devices. **Use caution when checking high voltage areas: terminals 1 through 6, the motor capacitor and the motor.**

1. Check the input indicator LEDs. They should only come ON when a keying device (card reader, push button, etc.) is activated. If any of the input LEDs are ON continuously, this will cause the gate operator to hold open. Disconnect the keying devices one at a time until the LED goes OFF.

2. Check any external secondary entrapment protection devices. Any short or malfunction in these devices can cause the gate operator to stop or to hold open.

3. A malfunction in a loop or loop detector can cause the gate operator to hold open, or to not detect a vehicle when it is present over the loop. The LEDs next to the loop detector ports on the operator circuit board will light only when the loop has detected an object above it. If the LEDs stays on after the object has gone, then the loop detector has malfunctioned. Pull the loop detector circuit boards from the loop ports on the operator circuit board. If the malfunction persists, the problem is not with the loop system. For more information on trouble shooting loops and loop detectors, refer to your loop detector instruction sheet and to the DoorKing Loop and Loop Detector Information Manual.

4. Check to be sure that there are no shorted or open control wires from the keying devices to the gate operator. If a keying device fails to open the gate, momentarily jumper across terminals 11 and 20 on the gate operator circuit board. If the gate operator starts, this indicates that a problem exist with the keying device and is not with the gate operator.

5. If a three-button control station (open-close-stop) is connected to this gate operator, check for proper wiring. Only a DoorKing three button control station (P/N 1200-006) can be used with this gate operator. Others will cause a malfunction.

6. Check the high voltage supply. A voltage drop on the supply line (usually caused by using too small supply voltage wires) will cause the operator to malfunction. Refer to the wire size chart in section 2.1 on page 16.

Symptom	Possible Solution(s)
Operator will not run. Power LED is OFF.	• Check that power to the operator is turned ON. • Transformer may be overheated. Turn power off and allow board to cool for several minutes then retest. Check for low 115 VAC power and low voltage shorts. • Check for 115 VAC at terminals 2 and 3. If voltage measures OK, check the terminal strip or replace the circuit board.
Operator will not run. Power LED is ON.	• Momentarily jumper terminal 11 to terminal 20. If the input LED does not come ON, check the terminal strip or replace the circuit board. If LED does come ON, proceed to next steps. • **Check Motor:** - Momentarily jumper terminal 11 to terminal 20. If the input LED does not come ON, check the terminal strip or replace the circuit board. If LED does come ON, proceed to next steps. - Remove circuit board. With power ON, momentarily jumper terminal 3 to terminal 4 with a 14 AWG insulated jumper wire. **CAUTION – HIGH VOLTAGE.** The motor should run. - With power ON, momentarily jumper terminal 3 to terminal 5 with a 14 AWG insulated jumper wire. **CAUTION – HIGH VOLTAGE.** The motor should run in the opposite direction of the above step. - If the motor runs in both steps above, replace the control board. If the motor does not run, or runs in only one direction, problem can be a bad motor, motor capacitor, wire connections from the control board to the motor or a bad control board.
Secondary operator motor will not run.	• Check that SW 1, switch 7 is OFF and SW 2, switch 4 is ON. • Remove circuit board. Momentarily jumper terminal 3 to one of the secondary motor terminals, then to the other secondary motor terminal with a 14 AWG insulated jumper wire. CAUTION – HIGH VOLTAGE. The secondary motor should run one way, then the other way as power is applied to each terminal. • If the secondary motor runs in both directions, replace the control board. If secondary motor does not run, or runs in only one direction, problem can be in the wiring from the primary to secondary operator, bad secondary motor or motor capacitor.

Continued on next page

Symptom	Possible Solution(s)
Gate opens a short distance, then stops and reverses.	• Check that the clutch is adjusted properly and is not slipping. • Disconnect the gate from the gate operator and check that the gate swings freely without any binding. • Check that SW-1, switch 7 is set correctly. • Check the PULSE LED on the circuit board. PULSE 1 should blink as the primary (or single) operator is running. PULSE 2 should blink as the secondary operator is running. If either PULSE LED is not blinking as the respective operator is running, check that the magnetic sensor is within 1/32 inch of the magnetic counter ring. • Replace the magnetic sensor. • Continue troubleshooting or replace the circuit board.
Gate opens but will not close.	• Check the input LEDs. Any ON will hold the gate open and indicates a problem with a keying device. • Check the secondary safety devices. Any activated will hold the gate open and indicates a problem with the safety device. • Check the loop detectors. Any activated can hold the gate open and indicates a problem with the loop detector or ground loop. • Operator may be in a “soft shutdown.” Activate any keying device to determine if operator returns to normal operation. • If automatic close is desired, be sure SW-1, switch 4 is ON. • Check motor as described on previous page.
Gate closes but will not open.	• Operator may be in a “soft shutdown.” Check input LEDs on terminals 11-13. If any are ON, momentarily disconnect, then re-connect the wire going to the respective terminal. Operator should open. • Check to be sure that the operator is running in the proper direction. Turn power OFF, and then back ON. Activate a keying device. Operator should run in the open direction. If operator runs in the close direction, turn power OFF and change direction switch SW-2, switches 1 and/or 2. Go to above section if operator now opens but will not close. • Be sure that the respective LED on the control board lights when the keying device connected to the respective terminal is activated. If LED does not light, momentarily place a jumper wire from terminal 20 to the input terminal being checked. If LED lights and gate opens, problem is with the keying device. If LED does not light, replace control board. • Check motor as described on previous page.
Gate starts to close, then reverses to open.	• Check that the clutch is adjusted properly and is not slipping. • Disconnect the gate from the operator and check that the gate operates freely without any binding. • Check the loop detector LEDs and input LEDs. Any that flash ON will cause the gate to reverse. • If a shadow loop is used, check for proper wiring. A mis-wired shadow loop detector will cause the gate to reverse. • Check the PULSE LED on the circuit board. PULSE 1 should blink as the primary (or single) operator is running. PULSE 2 should blink as the secondary operator is running. If either PULSE LED is not blinking as the respective operator is running, check that the magnetic sensor is within 1/32 inch of the magnetic counter ring. • Replace the magnetic sensor. • Continue troubleshooting or replace the circuit board.
Gate closes and then re-opens.	• Check for any input or loop detector LEDs that are ON. • Check that the operator is running in the proper direction (see “gate closes but will not open” above). • Check that SW-1, switch 5 is set correctly.
Alarm sounds for 5 minutes and then beeps once every 5 seconds. Operator will not run.	• Operator is in a “hard shutdown” condition. Reset switch must be activated to return operator to normal operation.
DC open system will not open gate upon AC power outage.	• Check if the DC system is set to open gate automatically or requires an input to open. • Check that the DC system power switch is in the ON position. • Check the batteries for proper voltage. Replace if necessary. • Replace the DC system circuit board.

8.3 Accessory Items

The following accessory items are available for the model 6300 swing gate operator.

Photo Cell - Non-contact (photo-cells) sensors for use as a secondary entrapment protection device.

MMTC, Inc. Model IR55	P/N 8080-010
MMTC, Inc. Model 60-278	P/N 8080-011
Carlo Gavazzi Type PMP12	P/N 8080-030
Carlo Gavazzi Type PMT	P/N 8080-031

Loop Detector - Detectors plug directly into ports on circuit board simplifying wiring.
P/N 9410-010 - Single channel detector
P/N 9409-010 – Two-channel detector

Magnetic Lock - Magnetic Gate Lock Kit provides an excellent means to secure swing gates and is a fail-safe device allowing emergency vehicle access upon power outage.
P/N 1216-080 and P/N 1216-081

Remote Reset - Provides a remote station to reset an operator in a hard shutdown condition. Must be mounted in line-of-site of the gate and operator. Includes visual and audible signals.
P/N 1404-080.

Control Station - Three button interior and exterior control stations provide manual open-close-stop gate operation.
P/N 1200-006 (Exterior) and 1200-007 (Interior, mounts into single-gang electrical box)

115 VAC Heater with Fan Assembly Kit - Thermostatically controlled heater and fan for cold and hot environments.
For 115 VAC input power ONLY. P/N 1601-154

208/230 VAC Heater with Fan Assembly Kit - Thermostatically controlled heater and fan for cold and hot environments.
For 208/230 VAC input power ONLY. P/N 1601-197

460 VAC Heater with Fan Assembly Kit - Thermostatically controlled heater and fan for cold and hot environments.
For 460 VAC input power ONLY. P/N 1601-198

Interconnection Cable - Interconnect wire cable contains all the necessary wires to interconnect primary / secondary operators.
Cable length 30 feet. P/N 2600-755
Cable length 40 feet. P/N 2600-756
Cable length 50 feet. P/N 2600-757

High Voltage Kit - Alter the input AC voltage on a 115 VAC 6300 to 208, 230, 460 or 575 VAC. P/N 2600-266

Time Clock - 7 day and 365 day time clocks can be used to automatically open gate at pre-set time and days. Compact clock fits inside the operator.
P/N 2600-791 - 7 day clock
P/N 2600-795 - 365 day clock

Torsion Rods - Torsion rod assembly is used on uphill swing gates for counter balance.
P/N 1203-084

Hinges - Heavy-duty ball bearing hinges provide easy swing gate operation.
P/N 1200-009, P/N 1200-019, P/N 1200-039.

Surge Devices - High and low voltage surge suppressors help prevent circuit board failure caused by lightning strikes and power surges.
P/N 1876-010 - High Voltage
P/N 1878-010 - Low Voltage

Molly D Grease - Molybdenum Disulfide (Moly D) multi-purpose grease for worm gear. P/N 2600-770 - 14 oz. tube.

Gate Scale - Use to test torque required to move gate. P/N 2600-225

Speed Bumps - Prefabricated six-foot speed bump reduces traffic speed through gate system. P/N 1610-150

Model 6300 1/2 HP 115 VAC

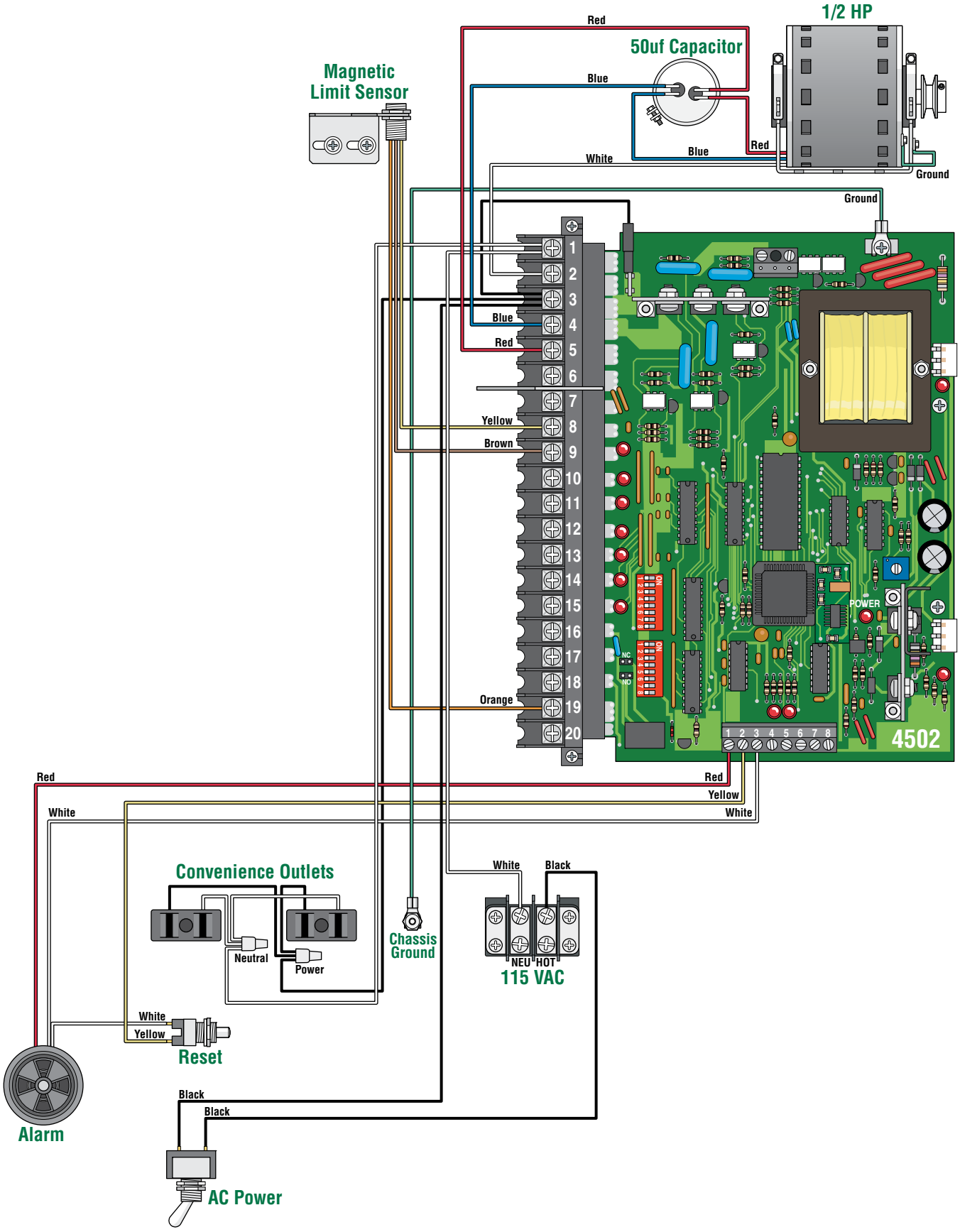

Model 6300 1/2 HP 115 VAC / Convenience Open

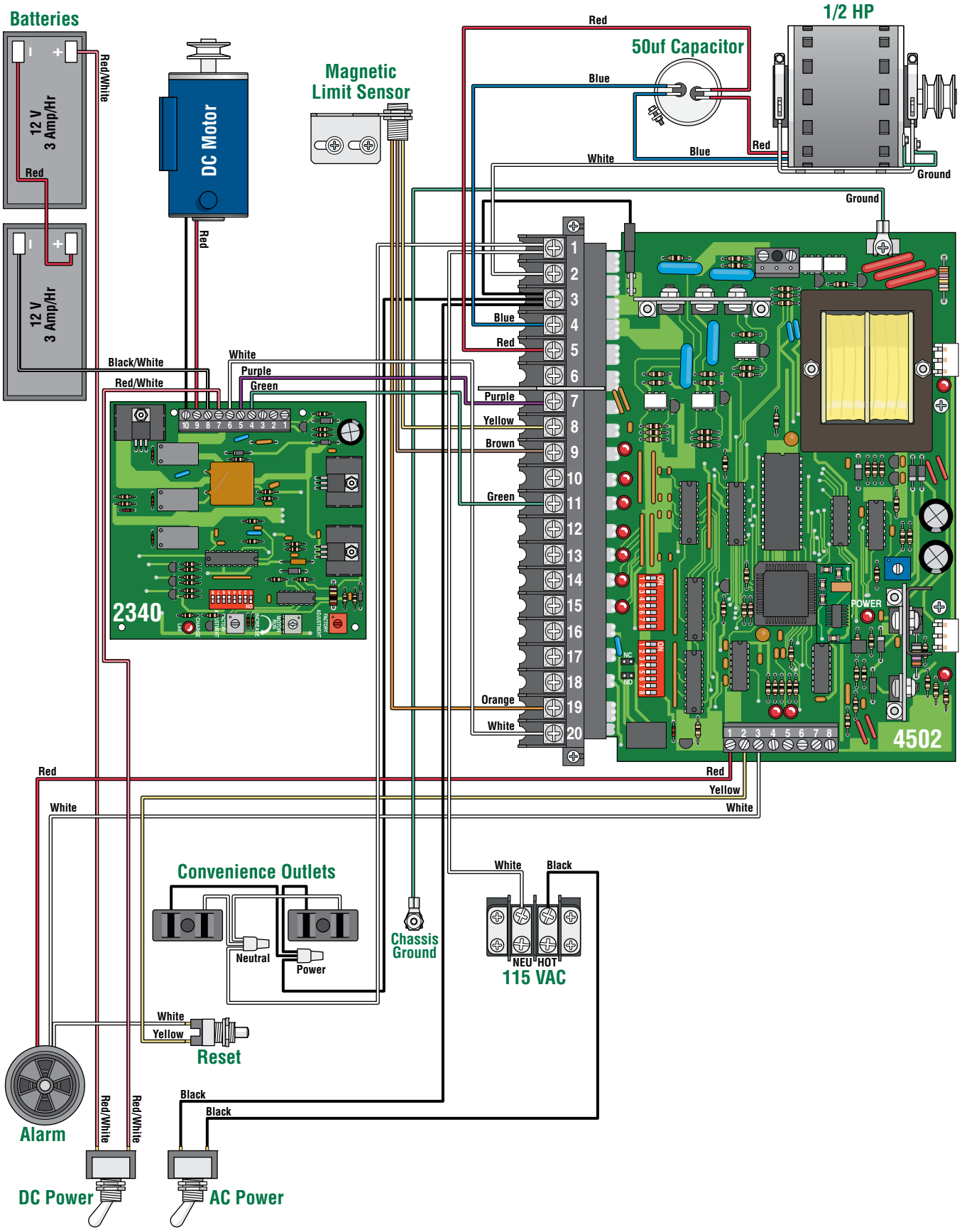

Model 6300 1 HP 115 VAC

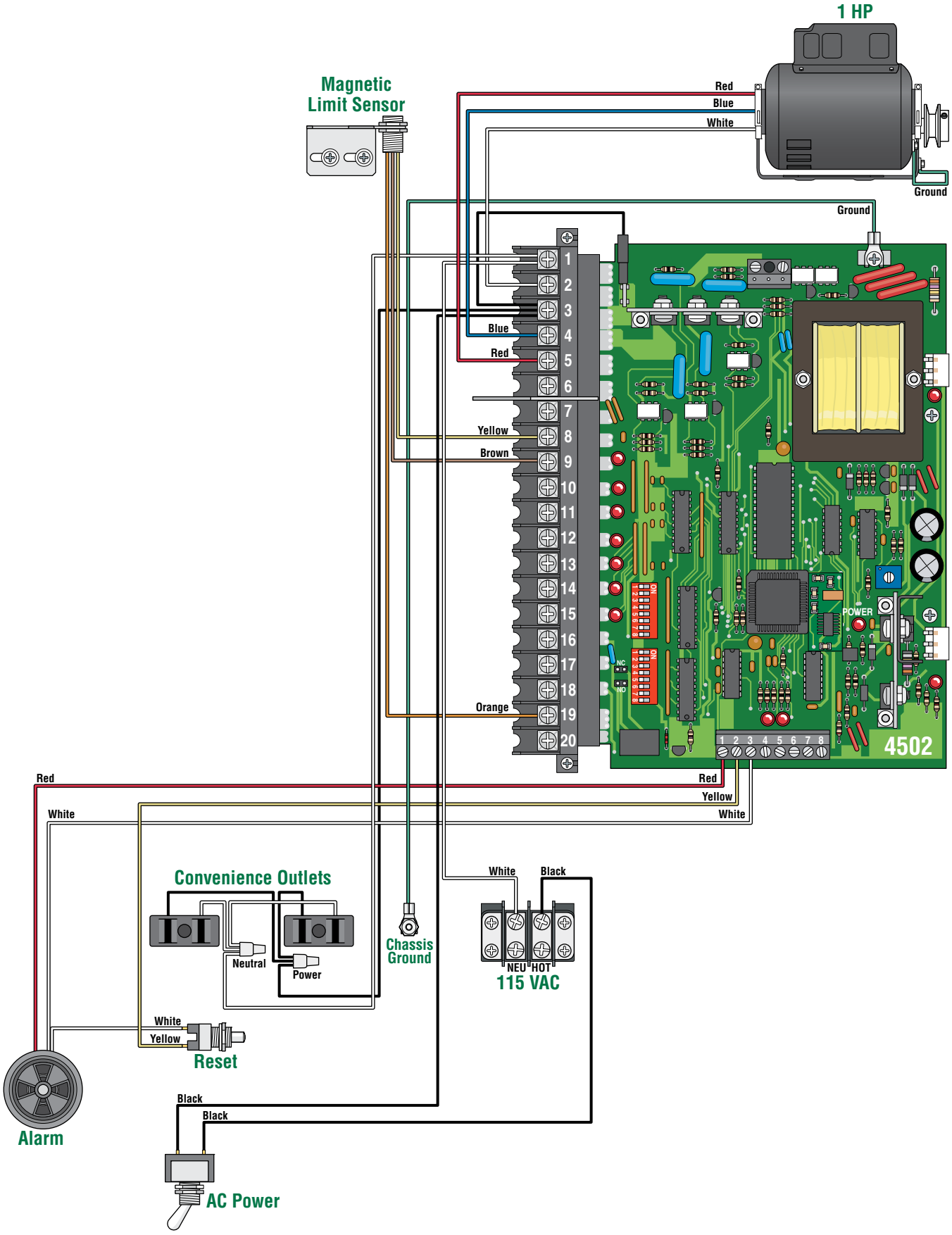

Model 6300 1 HP 115 VAC / Convenience Open

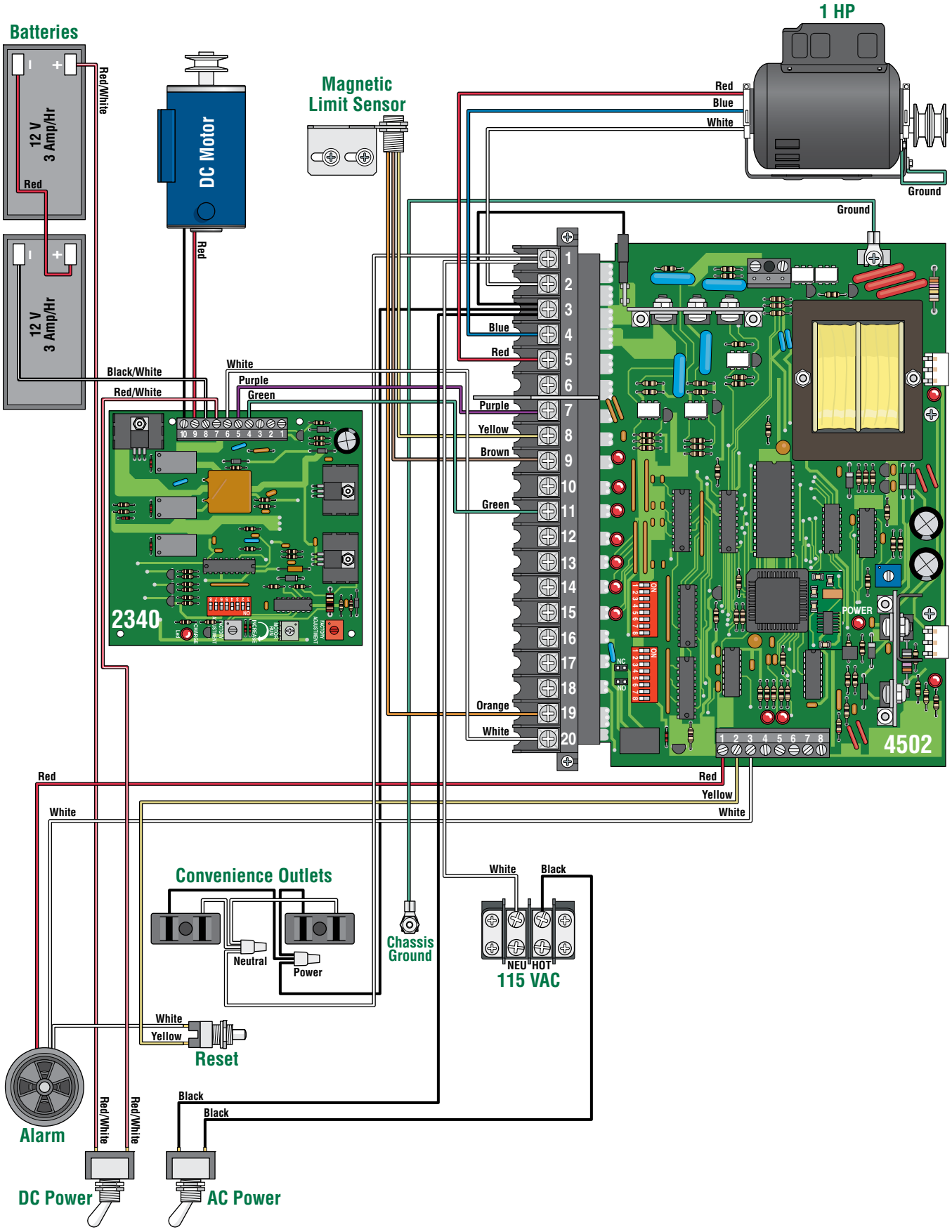

Model 6300 1/2 HP Secondary Operator

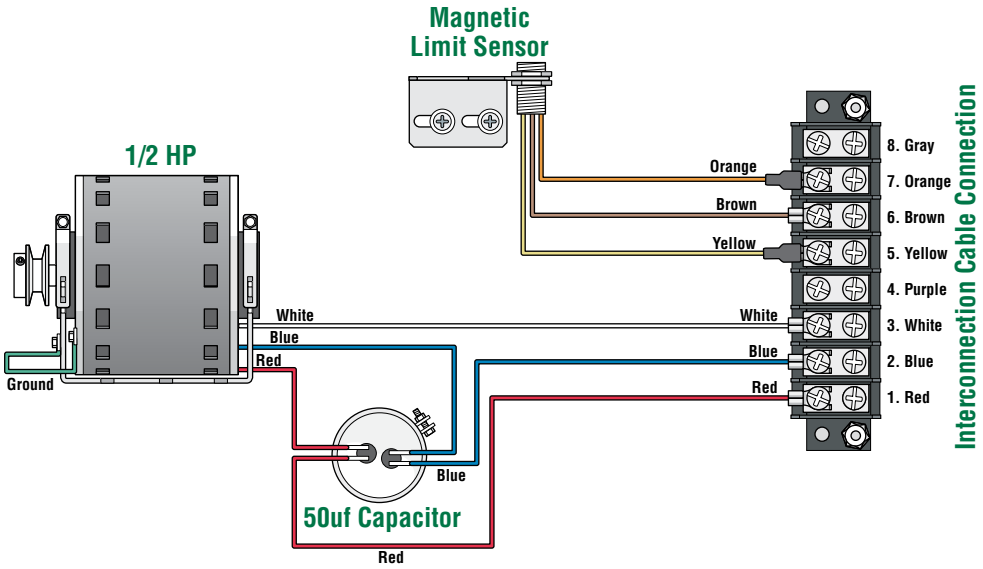

Model 6300 1/2 HP Secondary Operator/Convenience Open

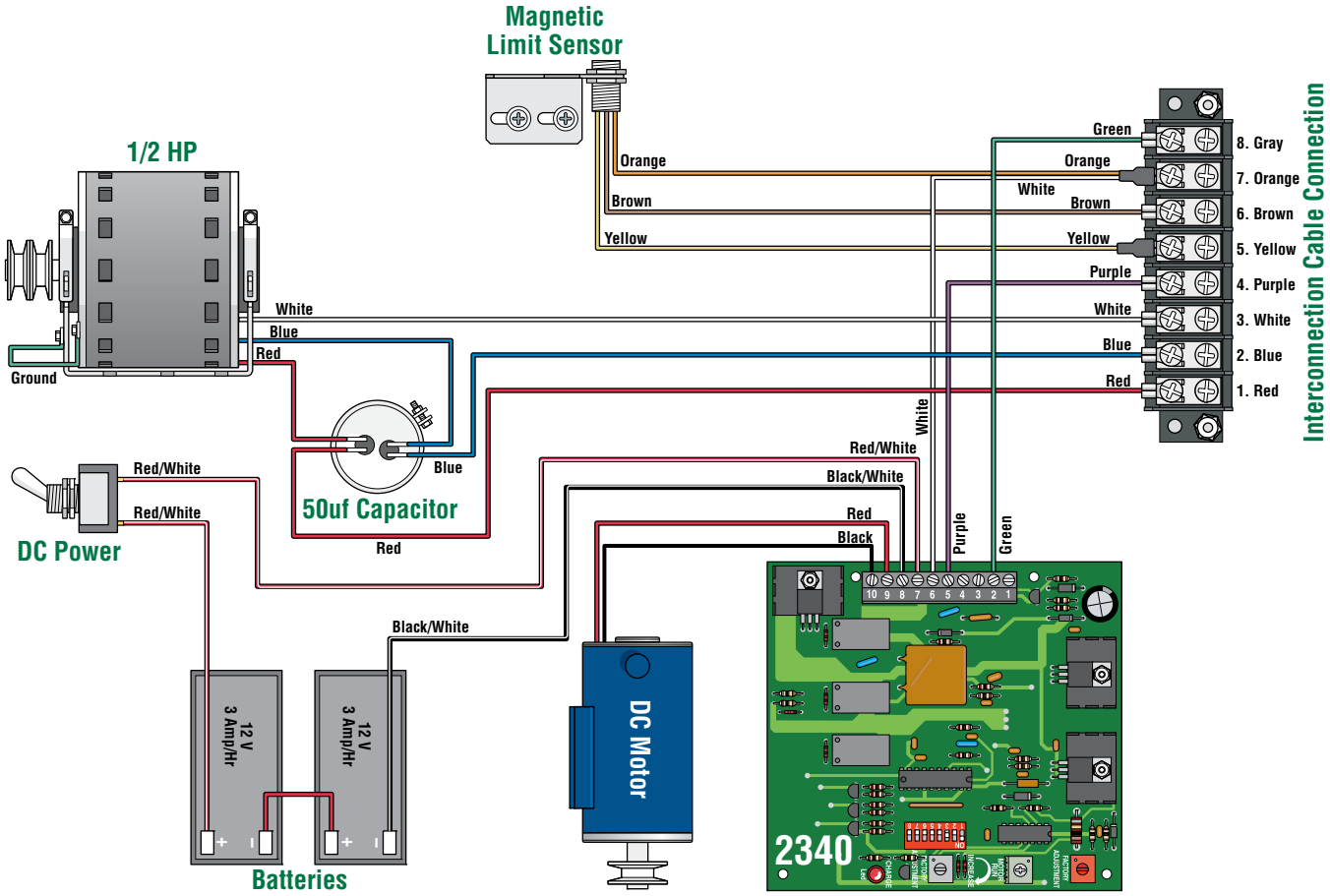

Model 6300 1 HP Secondary Operator

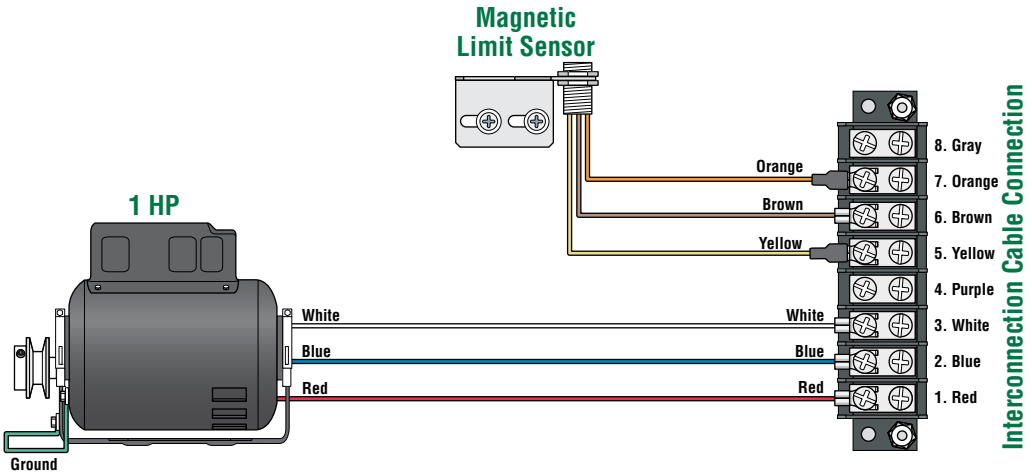

Model 6300 1 HP Secondary Operator/Convenience Open

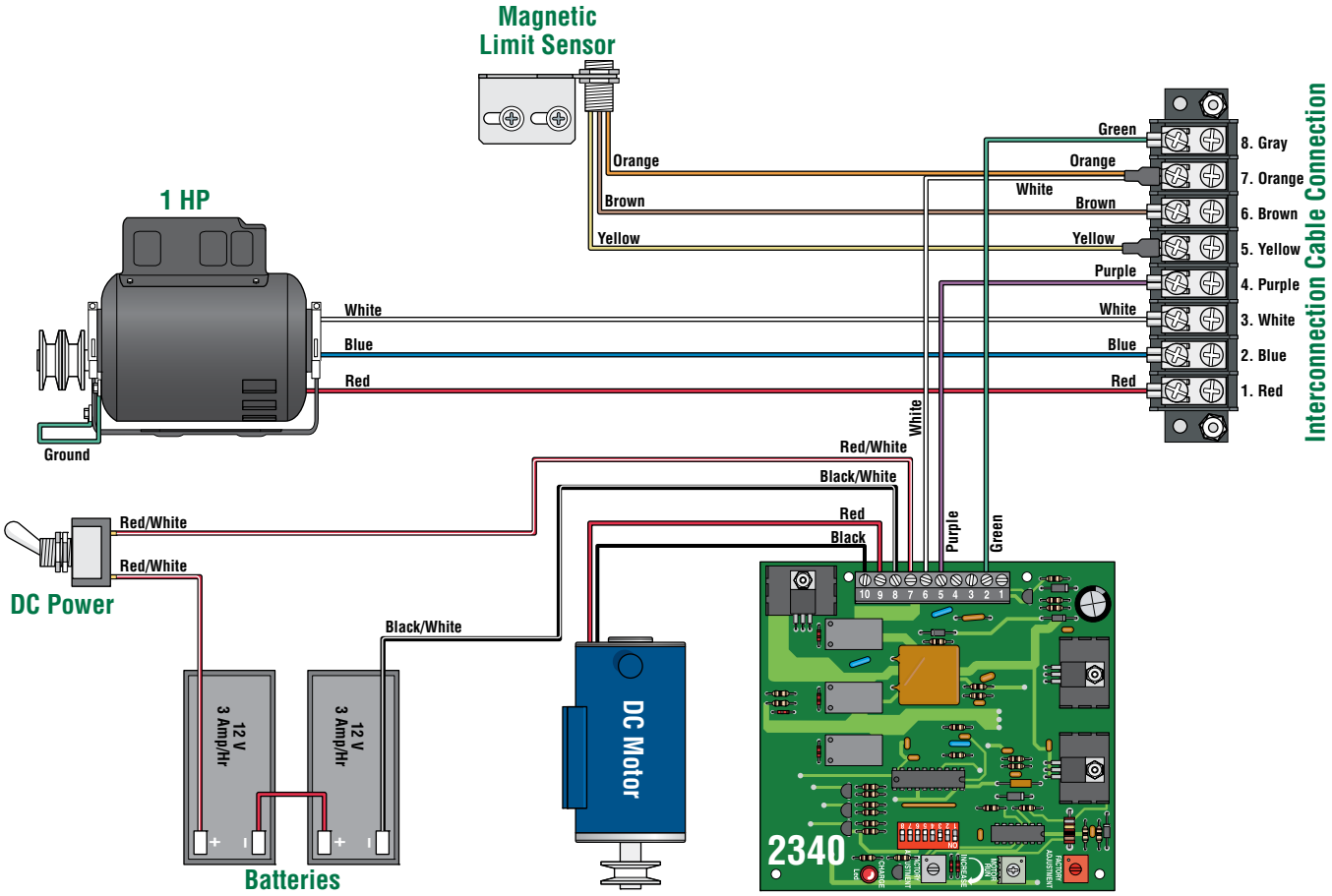

Installation/Owner's Manual

Series 6300

Vehicular Swing Gate Operator

Use this manual for circuit board 4502-010 Revision K or higher.

6300-065-A-12-12

For operators manufactured July 2011and later.

DOORKING®, INC.

www.doorking.com

DoorKing, Inc.
120 Glasgow Avenue
Inglewood, California 90301
U.S.A.

Phone: 310-645-0023
Fax: 310-641-1586