Owner's Manual

Models 6050 and 6100
Vehicular Swing Gate Operators

DoorKing, Inc.
120 Glasgow Avenue
Inglewood, California 90301
U.S.A.
Phone: 310-645-0023
Fax: 310-641-1586
www.doorking.com

P/N 6050-065 REV C, 7/01
Copyright 2000 DoorKing, Inc. All rights reserved.

Use this manual with the following models only.

Models 6050-080, 6050-081, 6100-080, 6100-081, 6100-082, 6100-083 with 4502-010 circuit board.

NOTE: Models 6100-082 and 6100-083 will have a supplemental manual (P/N 2340-065) that describes the operation and setup of the optional battery backup system available with these units, and provides additional wiring information for these units.

DoorKing, Inc. reserves the right to make changes in the products described in this manual without notice and without obligation of DoorKing, Inc. to notify any persons of any such revisions or changes. Additionally, DoorKing, Inc. makes no representations or warranties with respect to this manual. This manual is copyrighted, all rights reserved. No portion of this manual may be copied, reproduced, translated, or reduced to any electronic medium without prior written consent from DoorKing, Inc.

IMPORTANT NOTICES

Vehicular gate systems provide convenience to their users and limit vehicular traffic onto your property. These systems can produce high levels of force; therefore it is important that you are aware of possible hazards associated with your gate operating system. These hazards may include pinch points, entrapment, absence of controlled pedestrian access or traffic backup.

Be sure that the installer has instructed you on the proper operation of the gate and gate operator system. Be sure that the installer has trained you about the basic functions of the reversing systems associated with your gate operating system and how to test them. These include reversing loops, inherent reversing system, and may include electric edges, photoelectric cells, or other external devices.

- This Owner's Manual is your property. Keep it in a safe place for future reference.
- **Loops and loop detectors, photo-cells or other equivalent devices must be installed with this gate operator to prevent the gate from closing on vehicular traffic**.
- The speed limit for vehicular traffic through the gate area is 5 MPH. Install speed bumps and signs to keep vehicular traffic from speeding through the gate area. Failure to adhere to posted speed limits can result in damage to the gate, gate operator, and to the vehicle.
- Be sure that all residents are familiar with the proper use of the gate and gate operator. Be sure that all residents are familiar with the possible hazards associated with the gate system.
- Be sure that all warning signs are permanently installed on both sides of the gate in an area where they are fully visible to traffic.
- It is your responsibility to periodically check all reversing devices. If any of these devices are observed to function improperly, remove the operator from service immediately and contact your installing or servicing dealer.
- Follow the recommended maintenance schedule.
- Do not allow children to play in the area of the operator or to play with any gate-operating device.
- Be sure that all activating devices are installed a minimum distance of 10 feet away from the gate and gate operator, or in such a way that a person cannot touch the gate or gate operator while using the activating device. If activating devices are installed in violation of these restrictions, immediately remove the gate operator from service and contact your installing dealer.
- To remove the gate operator from service, operate the gate to the full open position and then shut off power to the operator at the service panel.

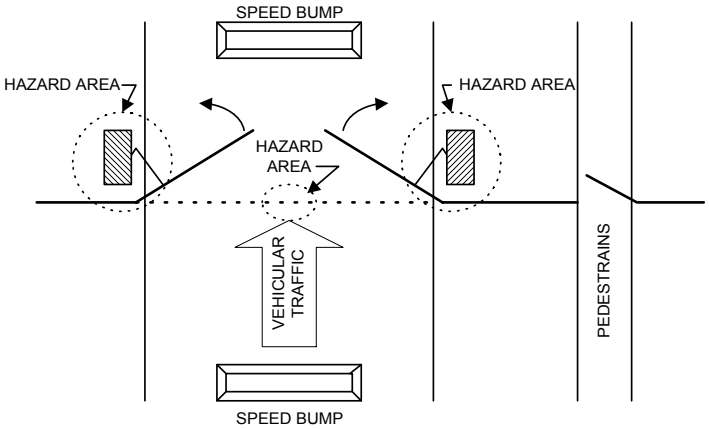

IMPORTANT SAFETY INSTRUCTIONS

WARNING - To reduce the risk of injury or death:

1. READ AND FOLLOW ALL INSTRUCTIONS.
2. Never let children operate or play with gate controls. Keep the remote control away from children.
3. Always keep people and objects away from gate. NO ONE SHOULD CROSS THE PATH OF THE MOVING GATE.
4. Test the operator monthly. The gate MUST reverse on contact with a rigid object or stop or reverse when an object activates the non-contact sensors. After adjusting the force or the limit of travel, retest the gate operator. Failure to adjust and retest the gate operator properly can increase the risk of injury or death.
5. KEEP GATES PROPERLY MAINTAINED. Read the owner's manual. Have a qualified service person make repairs to gate hardware.
6. The entrance is for vehicles only. Pedestrians must use separate entrance.
7. SAVE THESE INSTRUCTIONS!

RESTRICTIONS AND WARNINGS

Install The Gate Operator Only If:

- The operator is appropriate for the usage Class of the application.
- All exposed pinch points are eliminated or guarded.
- This operator is intended for installation only on swing gates used to control vehicular traffic. Pedestrians must be provided with a separate access opening.
- The gate must be installed in a location so that sufficient clearance is provided between the gate and adjacent structures when opening and closing to reduce the risk of entrapment (see diagram). Swinging gates should not open into public access areas.
- The gate must be properly installed and work freely in both directions prior to the installation of the gate operator. Do not over-tighten the operator clutch to compensate for a damaged gate.
- Controls must be far enough from the gate so that the user is prevented from coming in contact with the gate while operating the controls. Outdoor or easily accessible controls should have a security feature to prevent unauthorized use.
- All warning signs and placards must be installed where visible in the area of the gate.

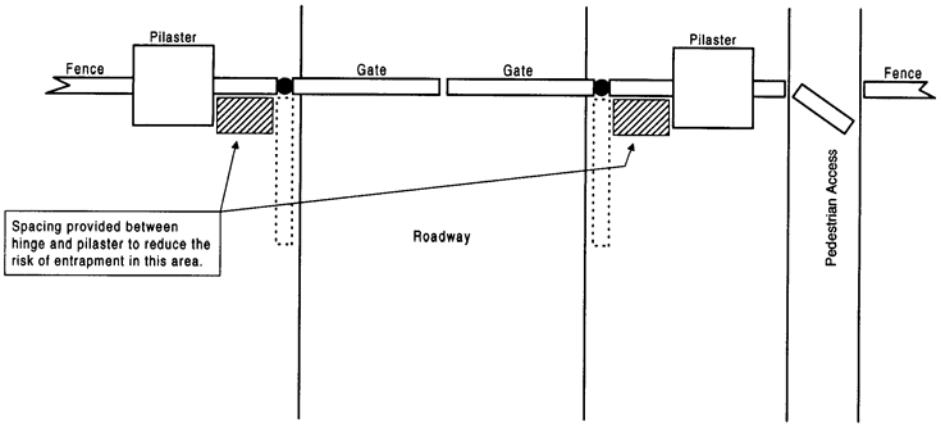

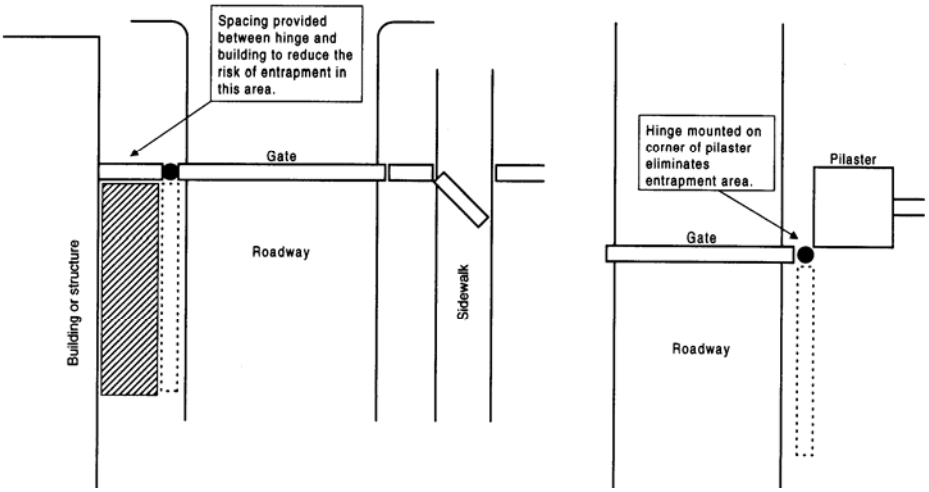

ENTRAPMENT PROTECTION

This vehicular gate operator is equipped with an inherent adjustable clutch (Type C - Primary) and an inherent (Type A - Secondary) entrapment sensing system. This system will sense an obstruction in both the opening and closing gate cycles, and will cause the gate to reverse direction should an obstruction be encountered. If the system detects a second obstruction before reaching the full open or close limit after the initial reversal, an alarm will activate and the operator will require a reset before resuming normal operation. See Section 4 for more information.

EXTERNAL ENTRAPMENT PROTECTION

Non-contact and contact sensors must be installed individually or in combination with each other to provide external entrapment protection. For gate operators utilizing a non-contact sensor:

- See diagram below for placement of non-contact sensors.
- Care should be exercised to reduce the risk of nuisance tripping, such as when a vehicle trips the sensor while the gate is still moving, and
- One or more non-contact sensors shall be located where the risk of entrapment or obstruction exists, such as the perimeter reachable by a moving gate or barrier.

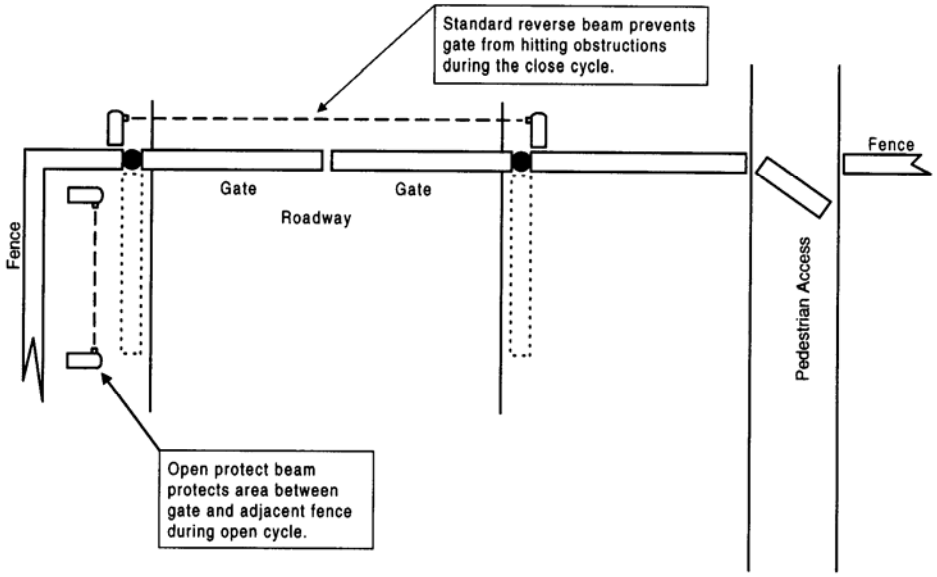

For gate operators utilizing a contact sensor:

- A hardwired contact sensor shall be located and its wiring arranged so that the communication between the sensor and the gate operator is not subjected to mechanical damage.
- A wireless contact sensor such as one that transmits radio frequency (RF) signals to the gate operator for entrapment protection functions shall be located where the transmission of the signals are not obstructed or impeded by building structures, natural landscaping or similar obstruction. A wireless contact sensor shall function under the intended end-use conditions.

GLOSSARY

GATE – A moving barrier such as a swinging, sliding, raising, lowering, or the like, barrier, that is a stand-alone passage barrier or is that portion of a wall or fence system that controls entrance and/or egress by persons or vehicles and completes the perimeter of a defined area.

RESIDENTIAL VEHICULAR GATE OPERATOR-CLASS I - A vehicular gate operator (or system) intended for use in a home of one-to four single family dwelling, or garage or parking area associated therewith.

COMMERCIAL / GENERAL ACCESS VEHICULAR GATE OPERATOR-CLASS II - A vehicular gate operator (or system) intended for use in a commercial location or building such as a multi-family housing unit (five or more single family units), hotels, garages, retail store, or other building servicing the general public.

INDUSTRIAL / LIMITED ACCESS VEHICULAR GATE OPERATOR-CLASS III - A vehicular gate operator (or system) intended for use in an industrial location or building such as a factory or loading dock area or other locations not intended to service the general public.

RESTRICTED ACCESS VEHICULAR GATE OPERATOR-CLASS IV - A vehicular gate operator (or system) intended for use in a guarded industrial location or building such as an airport security area or other restricted access locations not servicing the general public, in which unauthorized access is prevented via supervision by security personnel.

SYSTEM - In the context of these requirements, a system refers to a group of interacting devices intended to perform a common function.

WIRED CONTROL - A control implemented in a form of fixed physical interconnections between the control, the associated devices, and an operator to perform predetermined functions in response to input signals.

WIRELESS CONTROL - A control implemented in means other than fixed physical interconnections (such as radio waves or infrared beams) between the control, the associated devices, and an operator to perform predetermined functions in response to input signals.

INHERENT ENTRAPMENT SENSOR SYSTEM - An automatic sensor system which senses entrapment of a solid object and is incorporated as a permanent and integral part of the operator.

ENTRAPMENT – The condition when an object is caught or held in a position that increases the risk of injury.

TABLE OF CONTENTS

Section 1 – Installation

1.1 Specifications 1
1.2 Mounting Post / Base Plate Installation
1.2.1 Post Mount Operator 2
1.2.2 Pad Mount Operator 4
1.3 Mounting the Operator
1.3.1 Post Mounted Operators 6
1.3.2 Pad Mounted Operators 7
1.4 Arm Assembly and Installation
1.4.1 Crank Arm Assembly 8
1.4.2 Connecting Arm 9
1.4.3 Test the Installation 10
1.5 Warning Sign Installation 10
1.6 Setup for Gates Opening Other Than 90°
1.6.1 Determine the Location of the Operator 11
1.6.2 Arm Length Calculations 12

Section 2 – Wiring

Conduits 13
2.1 High Voltage Connections
2.1.1 Single Operator 14
2.1.2 Master / Slave Operators 15
2.2 Control Wiring 16
2.2.1 Radio Receiver Wiring 17
2.2.2 Secondary Entrapment Protection Device Wiring 18
2.3 Loop Detector Wiring 19
2.4 Magnetic Lock Wiring
2.4.1 Direct Power 20
2.4.2 Indirect Power 20
2.5 Gate Tracker™ Connections 21
2.6 Auxiliary Devices
2.6.1 Alarm Reset Switch 22
2.6.2 Auxiliary Stop Switch 22
2.7 Main Terminal Identification and Description 23
2.8 Auxiliary Terminal Identification and Description 24

Section 3 – Adjustments

3.1 Circuit Board Adjustments 25
3.2 Switch Settings 26
3.2.1 SW 1 (Top Switch) Description and Function 27
3.2.2 SW 2 (Bottom Switch) Description and Function 27
3.3 Limit Adjustment 28
3.4 Entrapment Sensing System
3.4.1 Clutch Adjustment 29
3.4.2 Secondary Entrapment Protection System 29

Section 4 – Operating Instructions

4.1 Power and Reset Switches....31
4.2 Shutdown Conditions
4.2.1 Soft Shutdown....32
4.2.2 Resetting a Soft Shutdown....32
4.2.3 Hard Shutdown....33
4.2.4 Resetting a Hard Shutdown....33
4.3 Manual / Emergency Gate Operation
4.3.1 Emergency Vehicle Access Conditions....34
4.3.2 Fail-Safe Manual Operation....34
4.3.3 Manual Release....35

Section 5 – Maintenance and Troubleshooting

5.1 Maintenance Schedule....37
5.2 Trouble Shooting....38
5.3 Accessories....40

Wire Diagram Model 6050 / 6100....41
Wire Diagram Model 6100 with Battery Backup....42
Illustrated Parts Breakdown Model 6050....43
Illustrated Parts Breakdown Model 6100....44
Illustrated Parts Breakdown Model 6100 with Battery Backup....45

SECTION 1 - INSTALLATION

Prior to beginning the installation of the swing gate operator, we suggest that you become familiar with the instructions, illustrations, and wiring guide-lines in this manual. This will help insure that your installation is performed in an efficient and professional manner.

The proper installation of the vehicular swing gate operator is an extremely important and integral part of the overall access control system. Check all local building ordinances and building codes prior to installing this operator. Be sure your installation is in compliance with local codes.

1.1 SPECIFICATIONS

Class of Operation:	Model 6050 - Class I only, Model 6100 - Class I, II, III, IV
Type of Gate:	Vehicular Swing Gates Only
Horsepower:	Model 6050 - 1/3 H.P., Model 6100 - 1/2 H.P.
Voltage / Phase:	115 VAC Single-phase only
Current:	Model 6050 - 4.3 amps, Model 6100 - 5.4 amps
Max Gate Weight:	Model 6050 - 400 Lbs., Model 6100 - 500 Lbs.
Max Gate Length:	Model 6050 - 10 Ft., Model 6100 - 14 Ft.
Cycles / Hr:	Model 6050 – 10/Hr, Model 6100 – 60/Hr
Speed:	90° in approximately 12 seconds
Entrapment Protection:	Primary - Inherent adjustable clutch (Type C)
	Secondary - Inherent entrapment sensing system (Type A) and provision for connection of a non-contact sensor (Type B1)

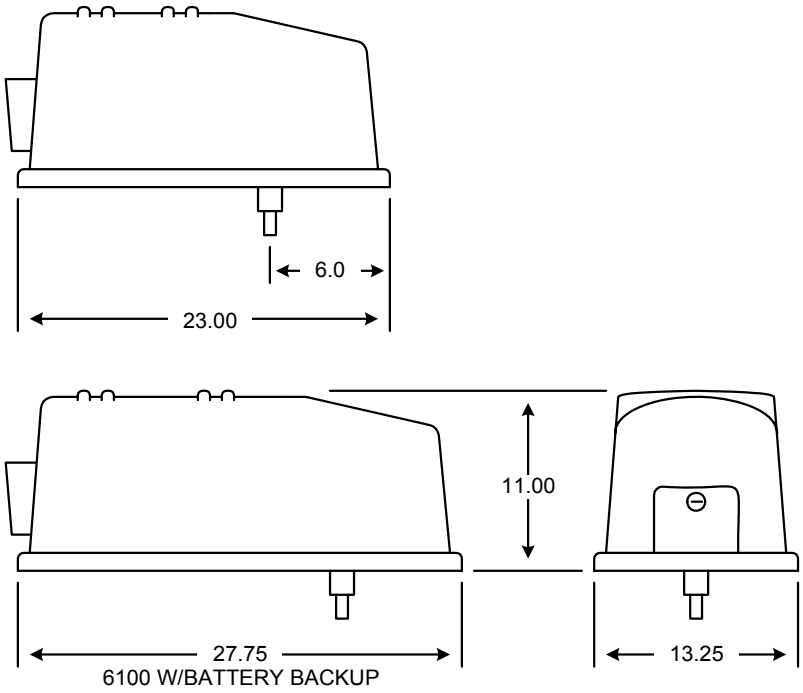

Figure 1

1.2 MOUNTING POST / BASE PLATE INSTALLATION

1.2.1 POST MOUNT OPERATOR

1. Screw the two mounting pipes supplied into the operator mounting plate.
2. Using Table 1 and Figure 2 determine where **POINT C** on the mounting plate / pipe assembly needs to be located. The location of this assembly and the **Y** measurement is dependent on the **X** measurement that you choose.

X	Y	Gate Width
34	30.75	14 Ft.
30	26.50	12 Ft.
26	22.25	10 Ft.

Table 1

3. **X** is the measurement from the **center** of the gate hinge to the **center** of the gate bracket and defines the position of the **A1** and **A2** points.
4. Once the location of **POINT C** has been determined, construct a form for the concrete pad according to Figure 3 and place the assembly into the form. Note that the depth of the pad is determined by soil conditions and local building codes.
5. Determine the height of the assembly required for your installation. Refer to Figure 4.
6. **IMPORTANT!! Prior to pouring concrete to anchor the mounting plate / pipe assembly, be sure that POINT C is located correctly and that the mounting plate is <u>level and at the correct height</u>.** Conduits can be run into the pad as required.
7. Let the concrete cure for 48 hours before proceeding with the installation of the gate operator.

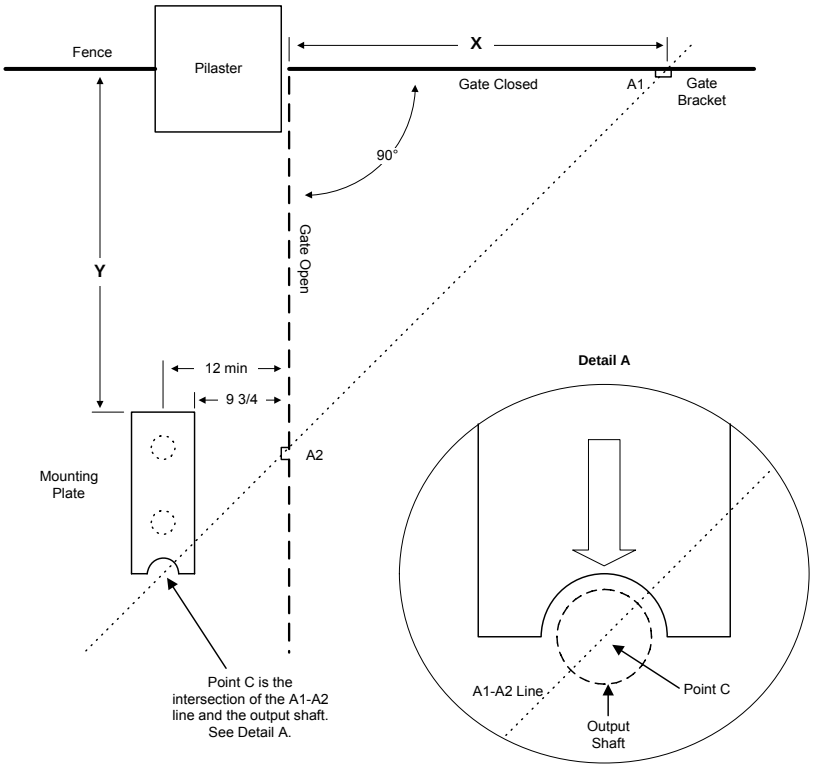

Figure 2

- The concrete pad is sized so that there is a minimum of four (4) inches of concrete from the outside edge of the mounting pipes.
- The height requirement is determined by adjusting the mounting plate / pipe assembly so that the top of the mounting plate is 4 3/4 inches above the top of the gate rail (Figure 4). This will allow you to mount the gate bracket onto the bottom rail of the gate and will keep the crank and connecting arms level (see page 8, Figure 12).

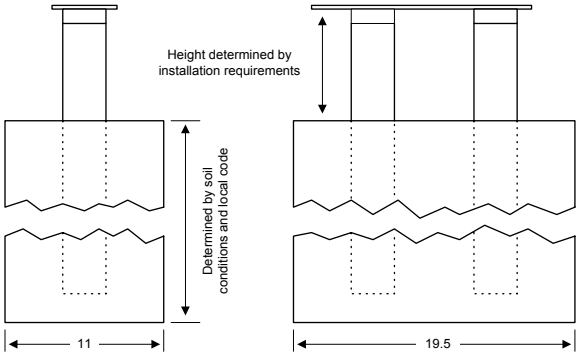

Figure 3

- The top of the mounting plate must be at least six (6) inches above the ground. If it is less than this, the gate arms will scrape the ground when the operator starts.
- It is very important that the operator mounting plate is level.

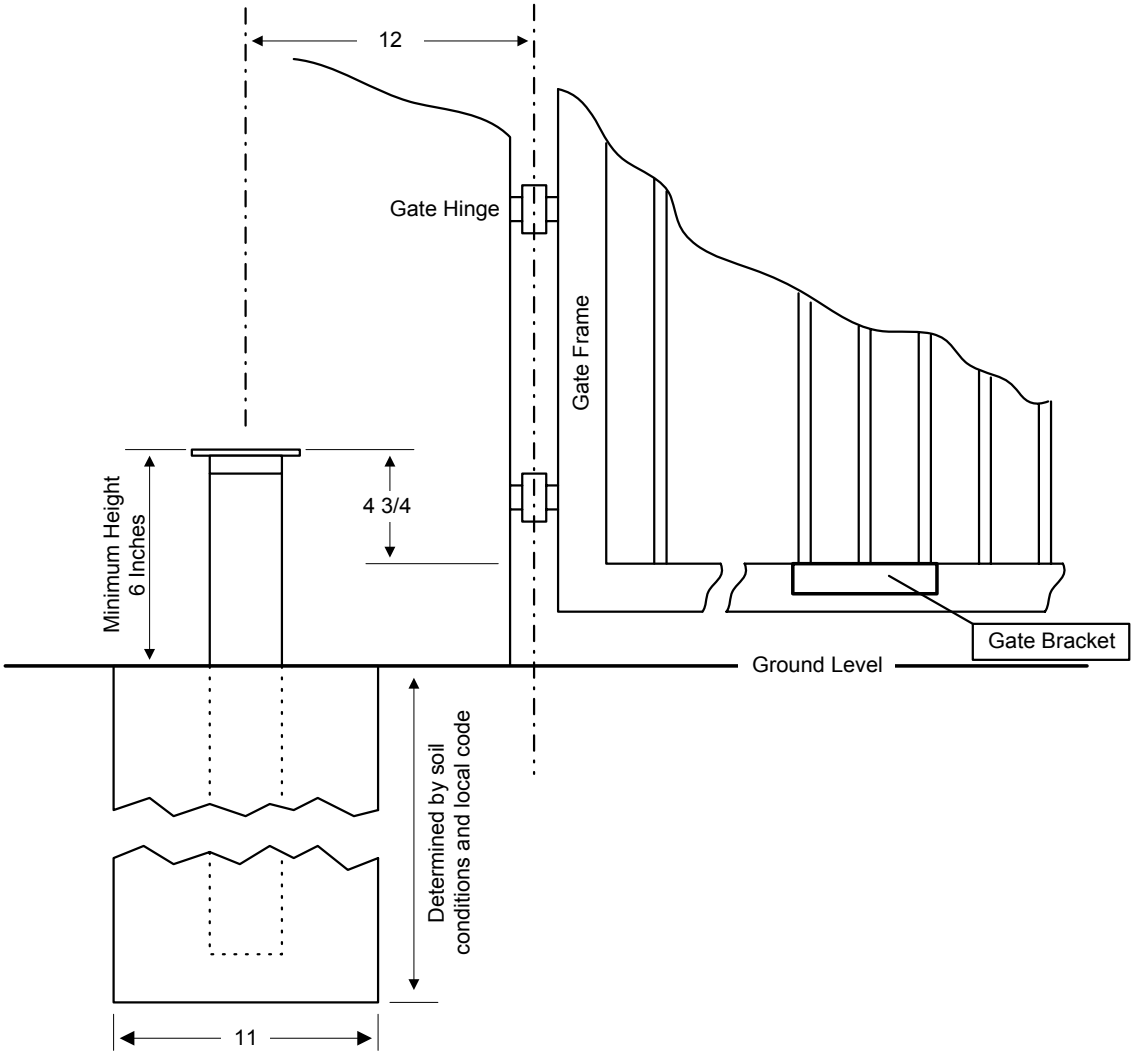

Figure 4

1.2.2 PAD MOUNT OPERATOR

X	Y	Gate Width
34	32	14 Ft.
30	28	12 Ft.
26	24	10 Ft.

Table 2

1. Using Table 2 and Figure 5 determine the location of the concrete pad and mounting plate. The location of the pad and base plate and the **Y** measurement is dependent on the **X** measurement that you choose.
2. **X** is the measurement from the **center** of the gate hinge to the **center** of the gate bracket and defines the position of the **A1** and **A2** points.
3. Once the location of the pad and base plate has been determined, construct a form for the concrete pad according to Figure 6. Note that the depth of the pad is determined by soil conditions and local building codes. The pad is sized so that there is four (4) inches of concrete around the mounting plate when it is installed on the pad.
4. **IMPORTANT!! Be sure that the top of the pad is level.**
5. Let the concrete cure for 48 hours before proceeding with the installation of the gate operator.
6. Anchor the concrete mounting plate to the pad using eight (8) 3/8 x 3 sleeve anchors (not supplied). It is important that the concrete base plate is located correctly on the pad so that the A1-A2 line will intersect the operator output shaft as shown in Figure 5.

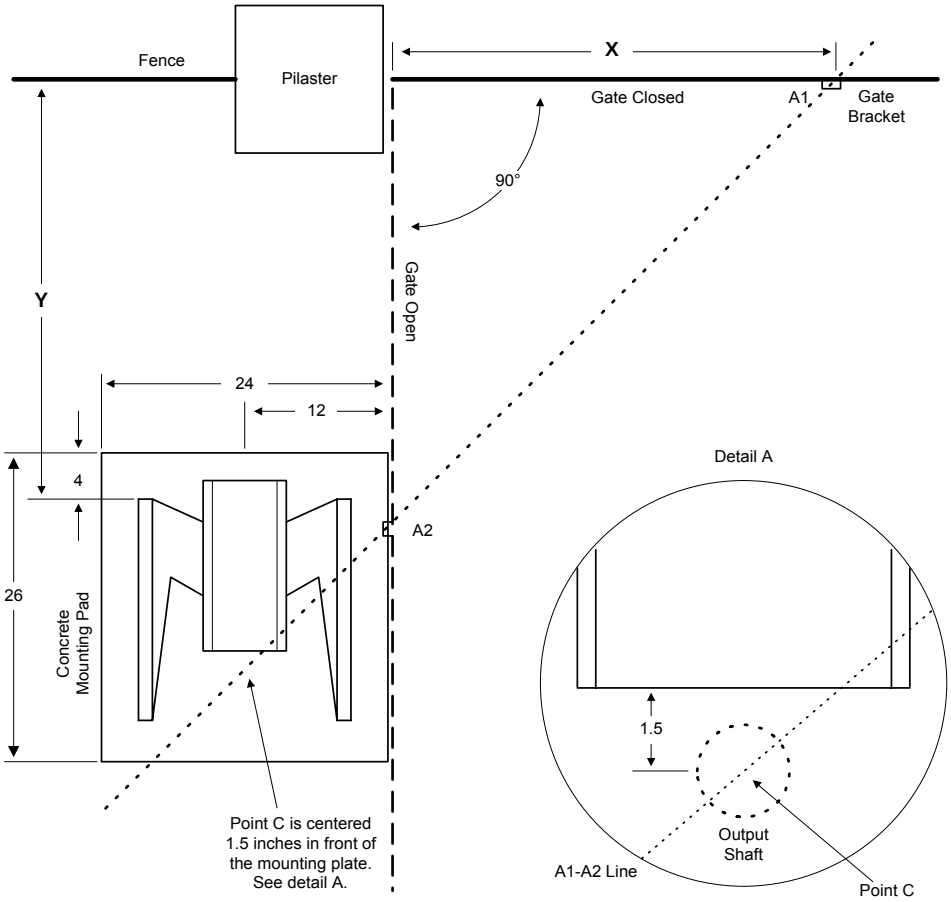

Figure 5

- The concrete pad is sized so that there is a minimum of four (4) inches of concrete around the perimeter of the pad.
- Attach the gate bracket to the gate so that the top of the mounting plate is 4 3/4 inches above the top of the gate bracket as shown in Figure 7. This will keep the crank and connecting arms level (see page 8, Figure 12).

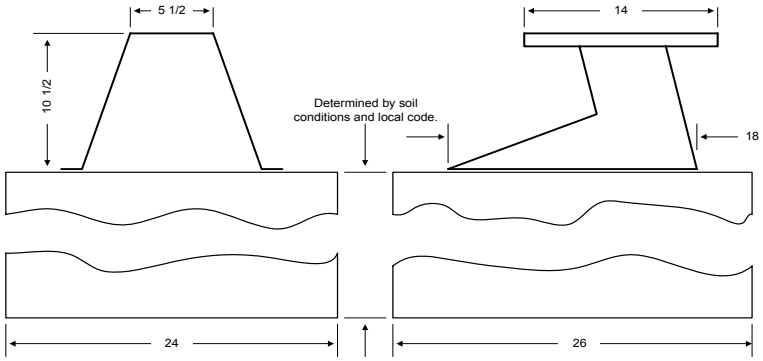

Figure 6

- The height requirement can also be ascertain by placing the gate bracket so that it is 5 3/4 inches (10 1/2 - 4 3/4) above the bottom of the base plate, or above the top of the concrete pad.
- The position of the gate bracket on the gate is directly related to the height of the concrete pad above ground level. If allowed by local codes, the top of the concrete pad can be flush with ground level as shown in Figure 7, which will allow the gate bracket to be lower on the gate.

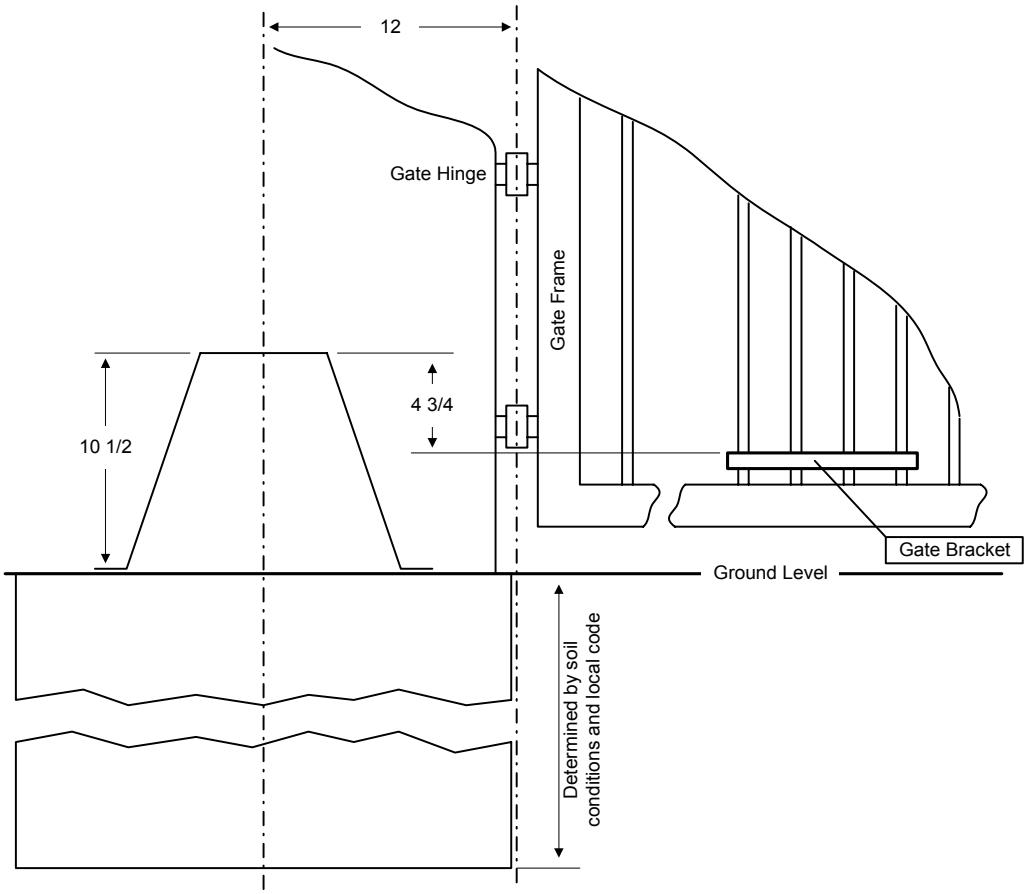

Figure 7

1.3 MOUNTING THE OPERATOR

1. Remove the operator from the shipping carton.
2. Remove the cover from the operator.
3. It is advisable to remove the conduit knockouts (as required) prior to mounting the operator onto the operator base plate.

1.3.1 POST MOUNTED OPERATORS

1. Bolt the operator to the mounting plate using four (4) 3/8-16 x 3/4 bolts supplied. These bolts secure the operator to the mounting plate at the locations that have nut plates (Figure 9).
2. Use the remaining hardware, three (2) 3/8-16 x 1 1/4 bolts, three (2) 3/8 washers, and three (2) 3/8-16 nuts to secure the operator to the mounting plate at the three locations without nut plates.
3. Route conduits into the operator at this time.

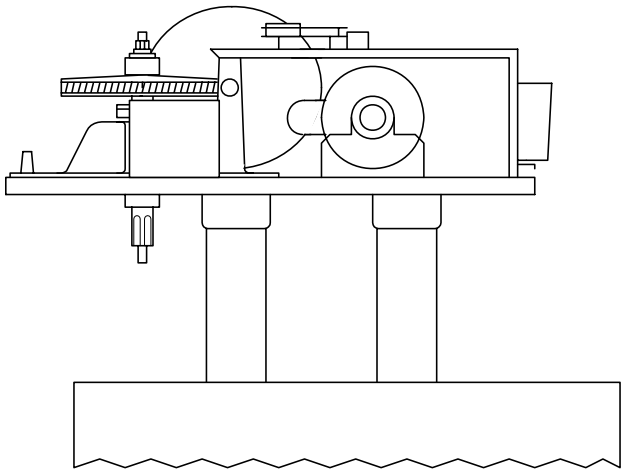

Figure 8

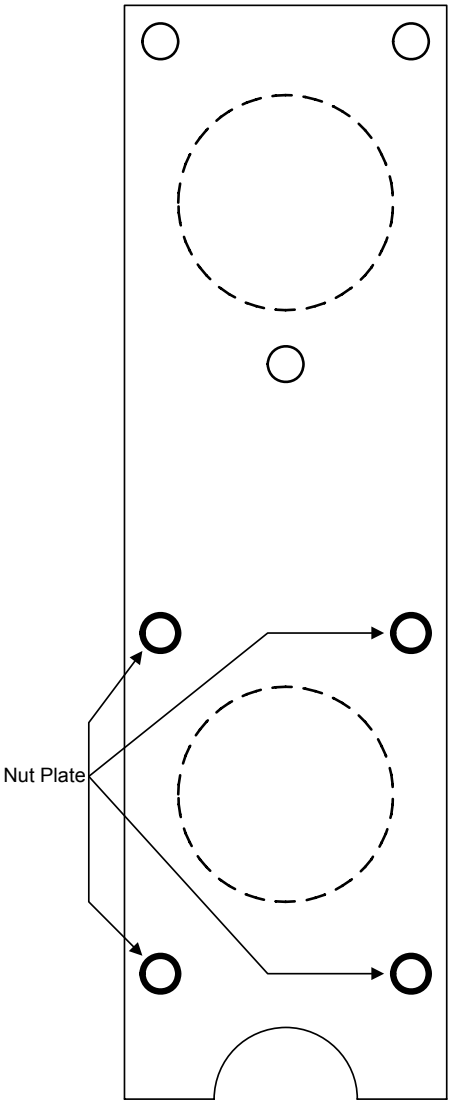

Figure 9

1.3.2 PAD MOUNTED OPERATORS

1. Place the operator on the mounting plate so that the four (4) mounting holes are in alignment and the output shaft extends in front of the mount plate base (Figure 10).
2. Bolt the operator to the mounting plate using two (2) 3/8-16 x 1 bolts, two (2) 3/8 washers, and two (2) 3/8-16 nuts in the holes marked A (Figure 11).
3. Use the remaining hardware, two (2) 3/8-16 x 1 1/4 bolts, two (2) 3/8 washers, and two (2) 3/8-16 nuts in the holes marked B (Figure 11).
4. Use the three (3) 5/16 lock nuts to secure the bolts from the bottom of the operator base to the mount plate base. These bolts are labeled "Bolt" in Figure 11.
5. Route conduits into the operator at this time.

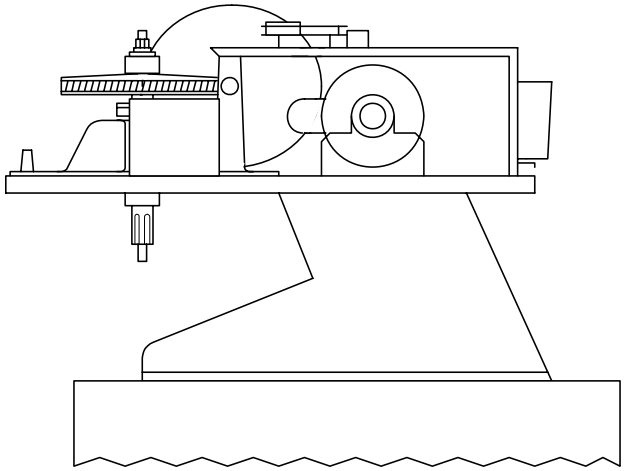

Figure 10

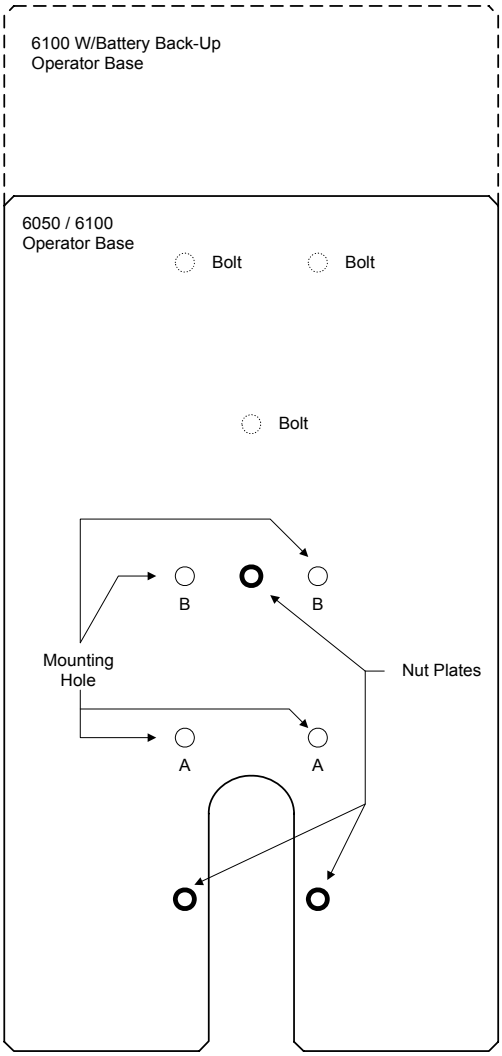

Figure 11

1.4 ARM ASSEMBLY AND INSTALLATION

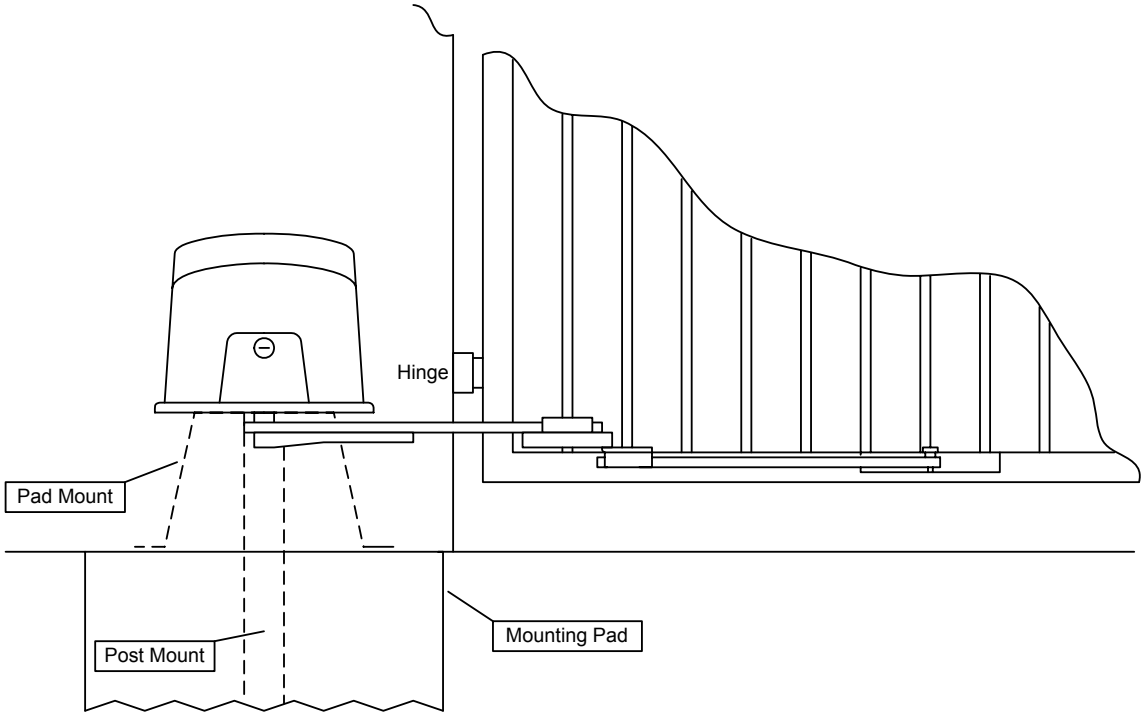

Figure 12

1.4.1 CRANK ARM ASSEMBLY

1. Attach the crank arm and crank power arm to the operator output shaft using the supplied hardware (Figure 13). Position the arm so that it is pointing towards the gate.
2. Do not insert the lock pin or lock into the crank arm assembly at this time. It will be installed later.
3. Adjust the lock nut so that it is snug against the washer, but will still allow the crank power arm to turn with little force.

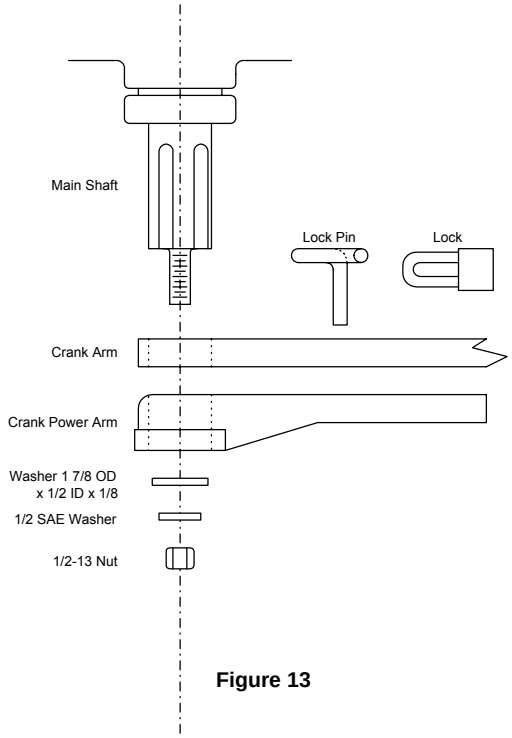

Figure 13

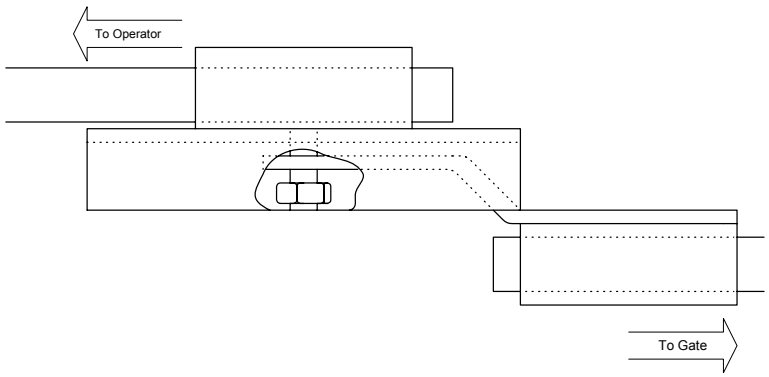

Figure 14

4. Slide the connector assembly (Figure 14) onto the crank arm so that the flange is away from the gate.
5. The connector assembly must be positioned on the crank arm at the correct distance from the operator shaft to allow the gate to open a full 90º. To determine this measurement, refer back to SECTION 1.2. Measure the distance from **POINT A1 to POINT A2** then divide this measurement by 2. The result is the crank arm assembly length. (Table 3 determines this measurement for the three different X measurements provided in SECTION 1.2.)

X	CRANK ARM
34	24.04
30	21.21
26	18.38

Table 3

6. Adjust the connector assembly on the crank arm so that the distance from the **center** of the operator output shaft to the **center** of the pivot on the connector assembly is equal to the result of the computation in step 4 above then tighten the setscrews to secure the connector in place.
7. The length of the crank arm / connector assembly is dependent on the X measurement that was selected in SECTION 1.2. This length can be calculated by using the Pythagorean Theorem $A^2 + B^2 = C^2$ to find the hypotenuse (A1, A2) of the right triangle formed by the gate hinge point, point A1 and point A2. Once the hypotenuse is found, divide it by 2 to get the required crank arm / connector assembly length. The crank arm lengths in Table 3 where determined by this method.

1.4.2 CONNECTING ARM

1. Place the gate in the full closed position.
2. Once the crank arm assembly length is set, slide one end of the connector arm through the connector assembly and attach the other end to the gate bracket as shown in Figure 15. Attach the arm to the bottom side of the gate bracket.
3. Be sure that the gate is fully closed and then tighten the three setscrews in the connector assembly to lock the connecting arm in place.

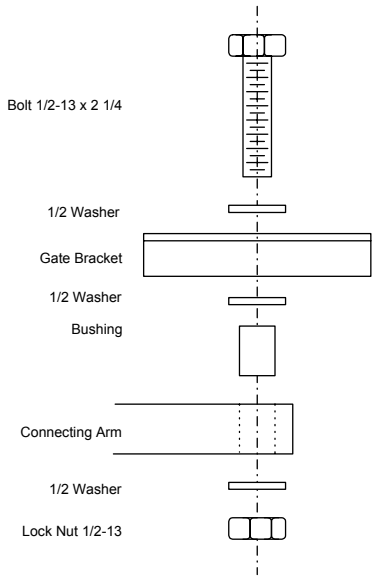

Figure 15

1.4.3 TEST YOUR INSTALLATION

- When the gate is fully closed, the drive and connecting arms should be in a straight line as shown in Figure 16.
- Manually open the gate. The connecting arm should rotate beneath the drive arm and output shaft. When the gate is fully open, the drive arm should be directly over the connecting arm as shown in Figure 17.
- If the gate does not open a full 90°, this means that the drive arm is less than half the A1-A2 measurement. Re-check this measurement and reset the drive arm length.
- If the gate opens farther than 90°, this means that the drive arm is greater than half the A1-A2 measurement. Re-check this measurement and reset the drive arm length.
- Shortening the crank arm 1" will stop the gate 2" short. Lengthening the crank arm 1" will cause the gate to swing 2 inches farther.
- Once you are sure that the gate opens and closes fully, trim the excess length off of the drive and connecting arms.

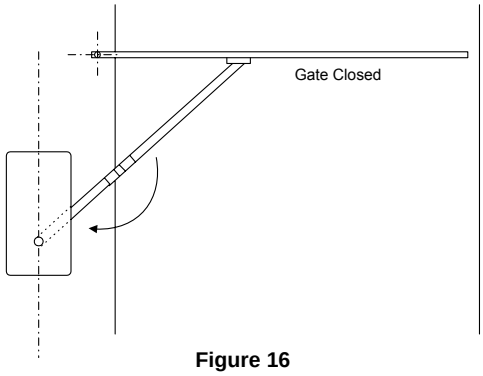

Figure 16

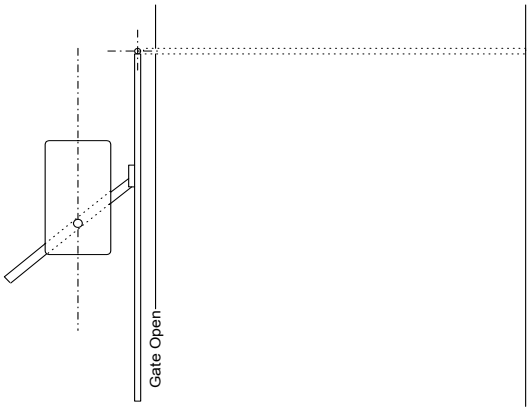

Figure 17

1.5 WARNING SIGN INSTALLATION

This DoorKing Swing Gate Operator is shipped with two warning signs. The purpose of the warning sign is to alert uninformed persons, and to remind persons familiar with the gate system, that a possible hazard exist so that appropriate action can be taken to avoid the hazard or to reduce exposure to the hazard.

- Permanently install the supplied warning signs in locations so that the signs are visible by persons on both sides of the gate.
- Use appropriate hardware such as wood or sheet metal screws (not supplied) to install the warning signs.

Figure 18

1.6 SETUP FOR GATES OPENING OTHER THAN 90°

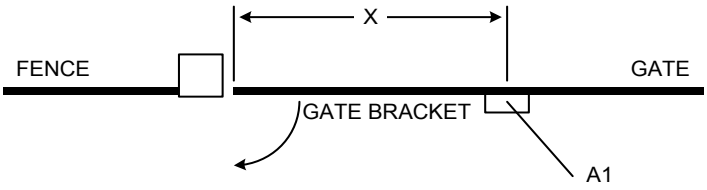

Figure 19

1.6.1 DETERMINE THE LOCATION OF THE OPERATOR

1. Determine where the gate-bracket will be attached to the gate. If the gate will be opened greater than 90°, the gate bracket should be mounted no farther than 30 inches from the center of the hinge point.
2. Once the gate bracket has been attached to the gate, close the gate fully and mark a point on the ground directly under the center of the mounting bracket. Label this point A1 (Figure 19).

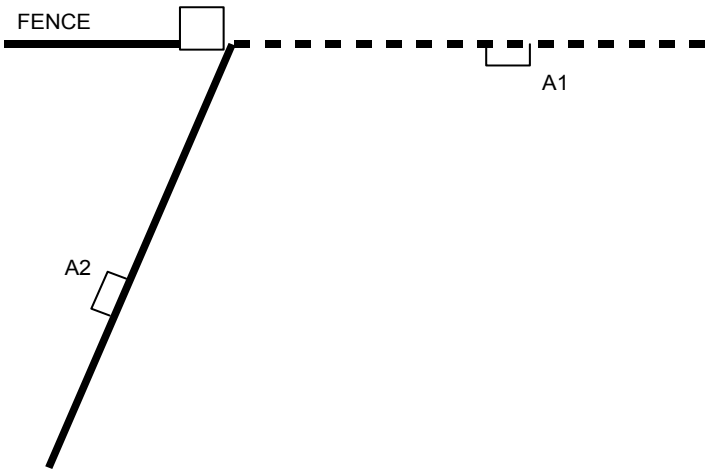

Figure 20

3. Swing the gate to the desired open position. This can be less than 90°, 90°, or greater than 90° (max 120°). With the gate in the desired position, mark a second point on the ground directly under the center of the gate bracket. Label this point A2 (Figure 20).

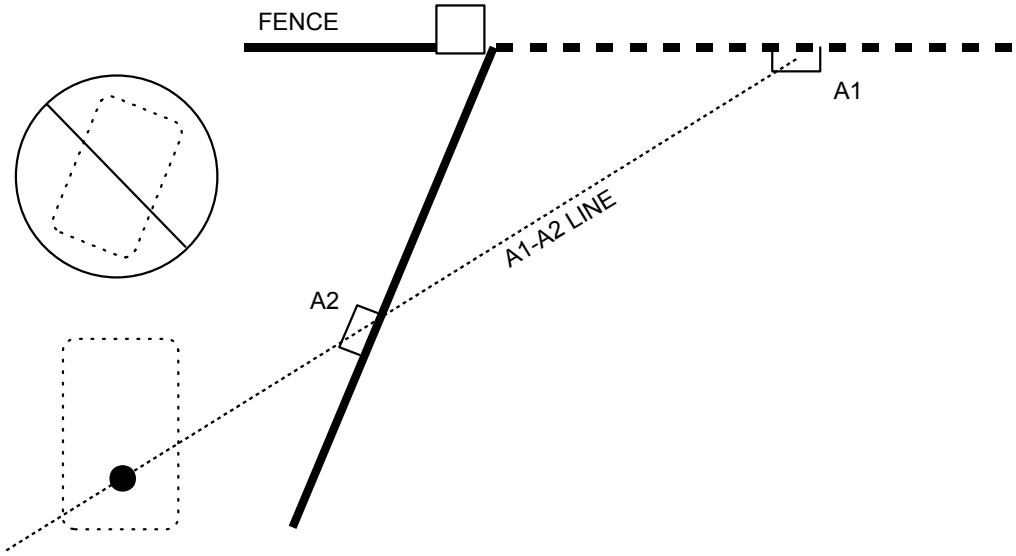

Figure 21

4. Determine where the operator output shaft will be placed. With a string, connect points A1 and A2 and extend this line beyond A2. The operator shaft must be on the A1-A2 line, at least 12 inches away from the gate (Figure 21).

   NOTE: Point C can be located anywhere on the A1-A2 line. However, the farther away from the gate point C is made, the longer the operator connecting arm will be.

5. Install the mounting plate / pipe assembly (or concrete base plate) in accordance with instructions detailed in this manual. Be sure that your mounting plate/ pipe assembly, or concrete base plate, and pad is located so that the operator output shaft will intersect the A1-A2 line at the point that you have selected.

   NOTE: Mount the plate / pipe assembly so that the operator will be square to the fence line and not parallel to the gate when it is in the open position.

1.6.2 ARM LENGTH CALCULATIONS

After the operator has been installed, use the following steps to determine the correct crank arm and connecting arm lengths for the installation.

1. Measure the distance from point A1 to point A2. Divide this measurement by 2. The result is the length of the crank arm assembly from the operator output shaft to the pivot point on the connector assembly.
2. Measure the distance from point A1 to the operator output shaft. Subtract from this measurement the length of the crank arm assembly that was determined in step 1. The result is the length of the connecting arm.

SECTION 2 – WIRING

Before attempting to connect any wiring to the operator, be sure that the circuit breaker in the electrical panel is in the OFF position. Permanent wiring must be installed to the operator as required by local electrical codes. It is recommended that a licensed electrical contractor perform this work.

Since building codes vary from city to city, we highly recommend that you check with your local building department prior to installing any permanent wiring to be sure that all wiring to the operator (both high and low voltage) complies with local code requirements.

THIS GATE OPERATOR MUST BE PROPERLY GROUNDED!!

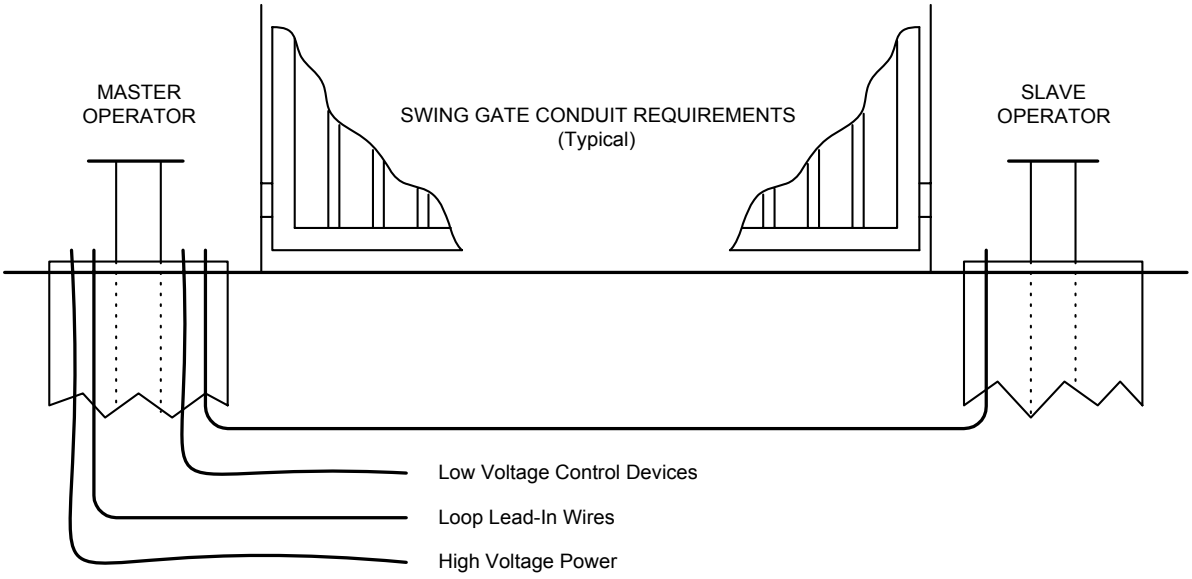

Figure 22

- The conduit requirements shown in figure 22 are for a typical swing gate operator installation (the slave operator is shown for those applications where a slave operator may be used). The conduit requirements for your application may vary from this depending on your specific needs.
- Use only sweeps for conduit bends. Do not use 90° connectors as this will make wire pulls very difficult and can cause damage to wire insulation.
- We suggest that minimum ¾-inch conduit be used.
- Be sure that all conduits are installed in accordance with local codes.

2.1 HIGH VOLTAGE CONNECTIONS

Use Table 4 to determine high voltage wire size requirements. The distance shown in the chart is measured in feet from the operator to the power source. If power wiring is greater than the maximum distance shown, it is recommended that a service feeder be installed. When large gauge wire is used, a separate junction box must be installed for the operator connection. The wire table is based on stranded copper wire. Wire run calculations are based on a 110 VAC power source with a 3% voltage drop on the power line, plus an additional 10% reduction in distance to allow for other losses in the system.

MODEL	AMPS	WIRE SIZE / DISTANCE IN FEET			
		12 AWG	10 AWG	8 AWG	6 AWG
6050 SINGLE	4.3	215	345	575	890
6050 M / S	8.6	105	170	285	430
6100 SINGLE	5.4	170	275	460	685
6100 M / S	10.8	85	135	230	340

Table 4

2.1.1 SINGLE OPERATOR

- Route incoming high voltage power through conduit and into the operator as shown in Figure 23.
- Be sure wiring is installed in accordance with local codes. Be sure to color code all wiring.
- Connect BLACK power wire to the HOT terminal as shown.
- Connect WHITE neutral wire to NEUT terminal as shown.
- Connect GREEN ground wire to ground lug.
- It is recommended that a surge suppresser be installed on the high voltage power lines to help protect the operator and circuit board from surges and power fluctuations.

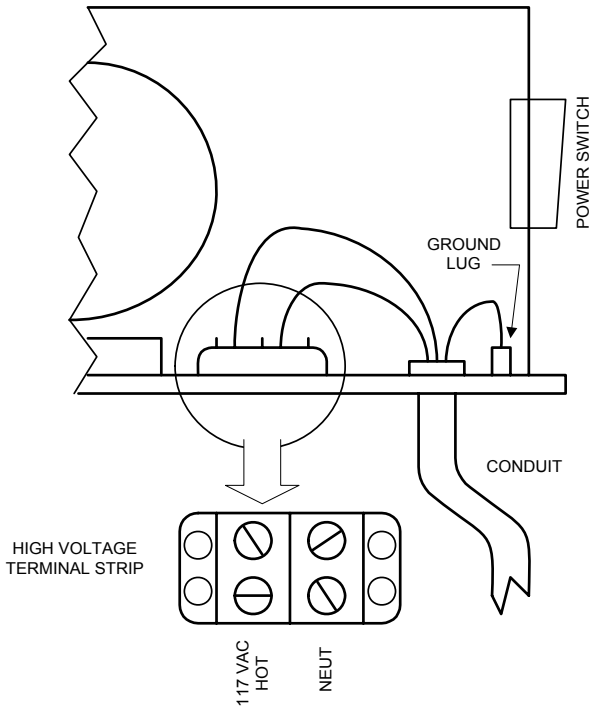

Figure 23

2.1.2 MASTER / SLAVE OPERATORS

1. Connect the high voltage power lines to the MASTER operator as described in 2.1.1 on the previous page. The master operator is the operator that has the circuit board installed in it. The slave operator does not have a circuit board.
2. The interface wiring between the two operators requires four (4) 16 AWG wires for motor power and grounding, and three (3) 18 AWG wires for low voltage control. Suggested wire colors for the high voltage lines are BLUE, RED and WHITE (all 16 AWG), for the low voltage control lines YELLOW, BROWN and ORANGE (all 18 AWG). The ground wire should be GREEN (16 AWG). In the slave operator, place a jumper wire from terminal 19 to terminal 20. Note: DoorKing's master/slave wire cable (P/N 2600-75X) contains all of the above wires.
3. Connect BLUE and RED 16 AWG wires to the slave motor power terminal strip (located at the top center of the 4502 circuit board in the master operator). Connect the other ends of these wires to terminals 4 and 5 in the slave operator. It does not matter which wire connects to which terminal.
4. Connect the WHITE 16 AWG wire from terminal 2 in the master operator to terminal 2 in the slave operator.
5. Connect the GREEN 16 AWG wire to the ground lug in the master operator and to the ground lug in the slave operator.
6. Connect the YELLOW 18 AWG wire from terminal 8 in the master operator to terminal 8 in the slave operator.
7. Connect the BROWN 18 AWG wire from terminal 10 in the master operator to terminal 9 in the slave operator.
8. Connect the ORANGE 18 AWG wire from terminal 19 in the master operator to terminal 19 in the slave operator.

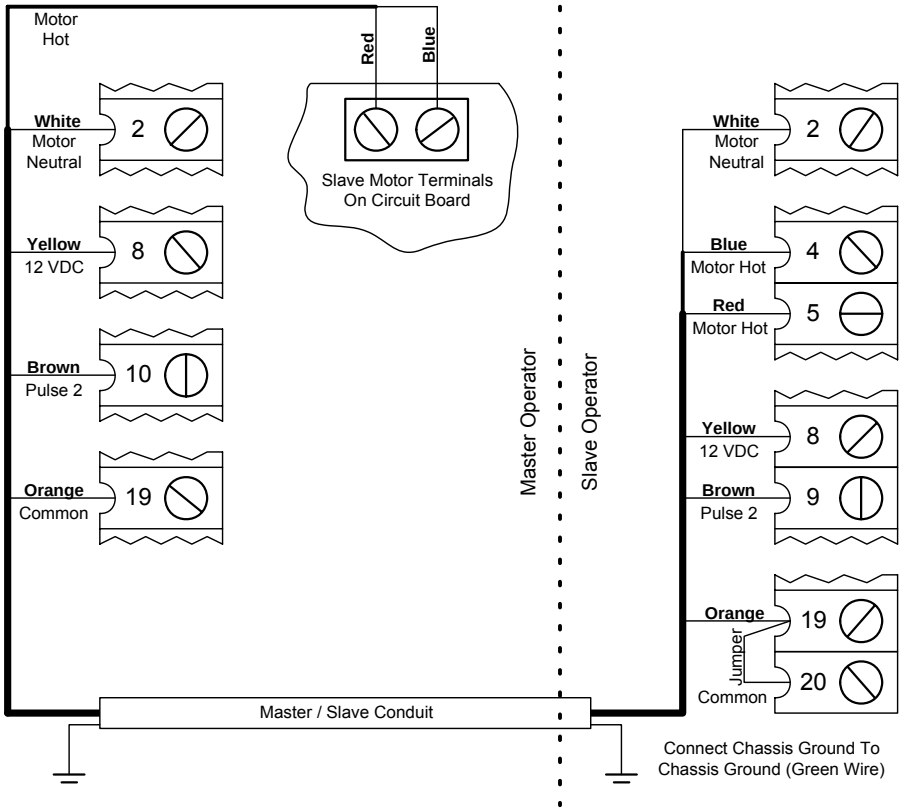

Figure 24

2.2 CONTROL WIRING

Controls must be far enough from the gate so that the user is prevented from coming in contact with the gate while operating the controls. Outdoor or easily accessible controls should have a security feature to prevent unauthorized use.

- Connect optional control devices to the master operator terminal strip as shown in Figure 25. Be sure that all electrical connections are made in accordance with local electrical codes. Use 18 AWG wire for all low voltage wiring, maximum distance 3000 feet. Use a low voltage surge suppresser, DoorKing P/N 1878-010 if low voltage wire runs exceed 1000 feet. All inputs to the terminal strip must be NORMALLY OPEN.
- Standard reversing input (term 15) only functions while the gate is in the closing cycle and should not be used as an input for a secondary entrapment protection device for the open gate cycle. See section 2.2.2 for secondary entrapment protection device wiring.
- Do not power any devices from the circuit board other than a low voltage radio receiver.
- Three-button control station must be DoorKing P/N 1200-006 only. Others will not work.
- If magnetic lock is used, refer to section 2.4.

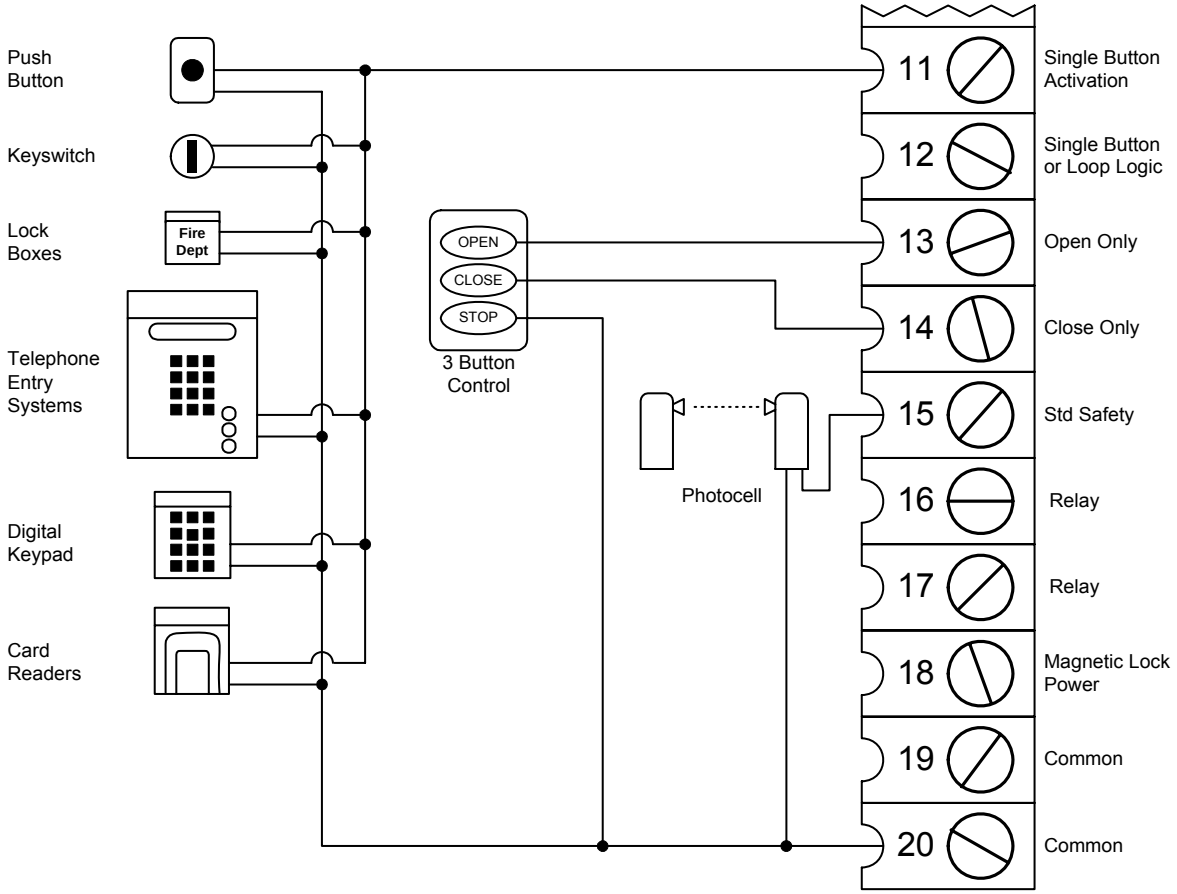

Figure 25

2.2.1 RADIO RECEIVER WIRING

- Connect the radio receiver to the master operator as shown in Figure 26. If operators with battery backup are being used, refer to the supplemental manual (p/n 2340-065) for radio receiver wiring options.
- Power available at terminal 7 is limited to 250ma at 24 VAC. Do not power any other device from this terminal.
- If other control devices are used, they must be powered with their own power supply.

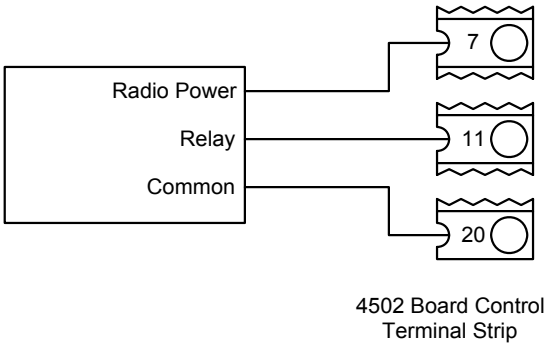

Figure 26

2.2.2 SECONDARY ENTRAPMENT PROTECTION DEVICE WIRING

This swing gate operator uses an inherent entrapment sensing system (Type A) as the secondary entrapment protection device. Additional external entrapment protection may be added to insure a safe vehicular gate operating system. Additional inputs are available for non-contact sensors. Secondary entrapment protection may be provided by a combination of non-contact (Type B1), contact (Type B2) and inherent adjustable clutch (Type C) devices. See Section 5.3 for a list of acceptable secondary entrapment protection devices.

- Disconnect power to the gate operator before installing the non-contact sensors.
- See Figure 27 for suggested placement of sensors. (Diagram is for illustration purposes only. Actual placement of sensors is dependent on the installation requirements).
- One or more non-contact sensors should be located where the risk of entrapment or obstruction exist such as the perimeter reachable by a moving gate or barrier.
- Use only U.L. listed (or equivalent) non-contact sensors.
- Connect the non-contact sensors as shown below. Inputs from the photo-beam to the circuit board are Normally Open (N.O.). Diagram does not illustrate power wiring to the photo-beams. Refer to the photo-beam wiring diagram and installation instructions for proper connection of photo-beam power.
- **Photo-beam input to MAIN TERMINALS 15 and 20 will REVERSE travel of gate when activated during the CLOSE CYCLE ONLY**.
- **Photo-beam input to AUXILIARY TERMIANLS 7 and 8 will STOP gate travel in either the OPENING or CLOSING cycle**. Gate will resume normal operation when photo-beam is no longer activated.

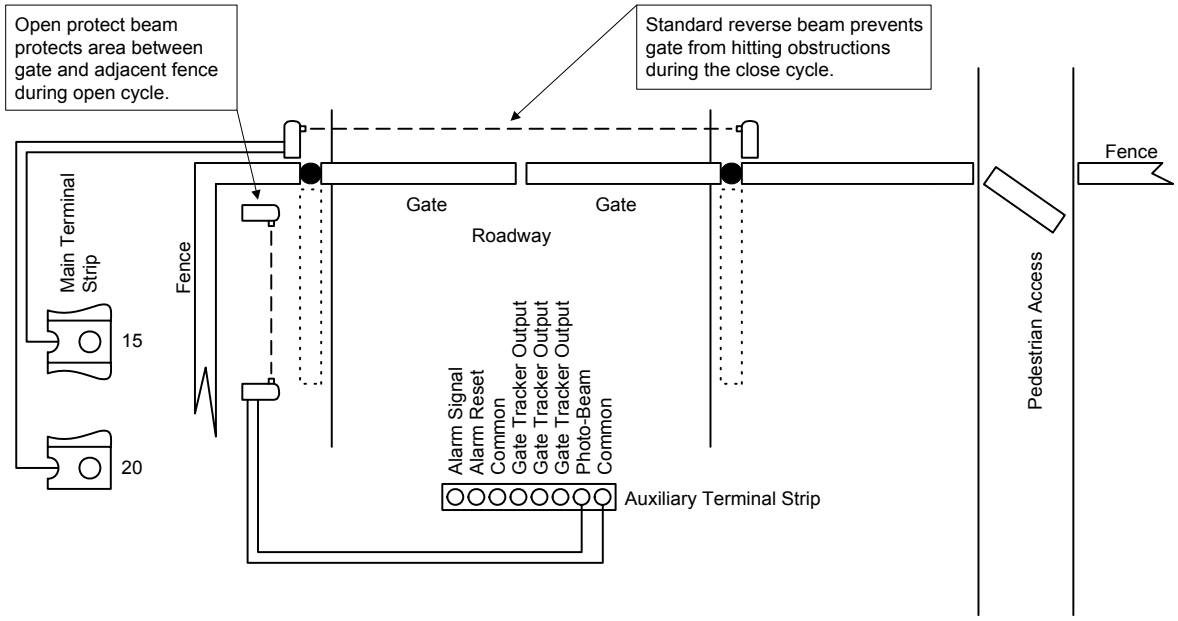

Figure 27

2.3 LOOP DETECTOR WIRING

- Loop detector wiring is shown for DoorKing model 9405 and 9406 Plug-In loop detectors only. If other loop detectors are used, refer to the installation instructions supplied with those detectors for wiring requirements.
- If other loop detectors are used, all inputs to the terminal strip are NORMALLY OPEN. Use a separate power supply to power external detectors. Be sure that power is turned off prior to making any connections to the terminal strip.
- Loop layout shown is for a typical swing gate application with two-way traffic or one-way exit only traffic. For one-way entry only traffic, the open loop is replaced with a second reverse loop wired in series with the first reverse loop. The 9506 detector is not needed in this application.
- Refer to the separate Loop Information Manual (available from DoorKing) for instructions on installing loops or preformed loops.
- For correct SHADOW LOOP operation, jumper wire must be placed from terminal 15 to terminal 16, and SW1, switches 1 and 2 must be OFF. If a magnetic lock is used, set switch 1 ON and switch 2 OFF.
- NOTE: Output of Shadow Loop Detector may be connected directly to terminal 15 (dotted line - no jumper required between 15 and 16) if SW 2, switch 5 is ON. However, with this switch ON, terminal 15 becomes a shadow input (active only when the gate is FULL OPEN) and all reversing devices connected to terminal 15 will operate as shadow devices. If this is not desirable, wire the shadow loop detector as instructed in the above bullet point.

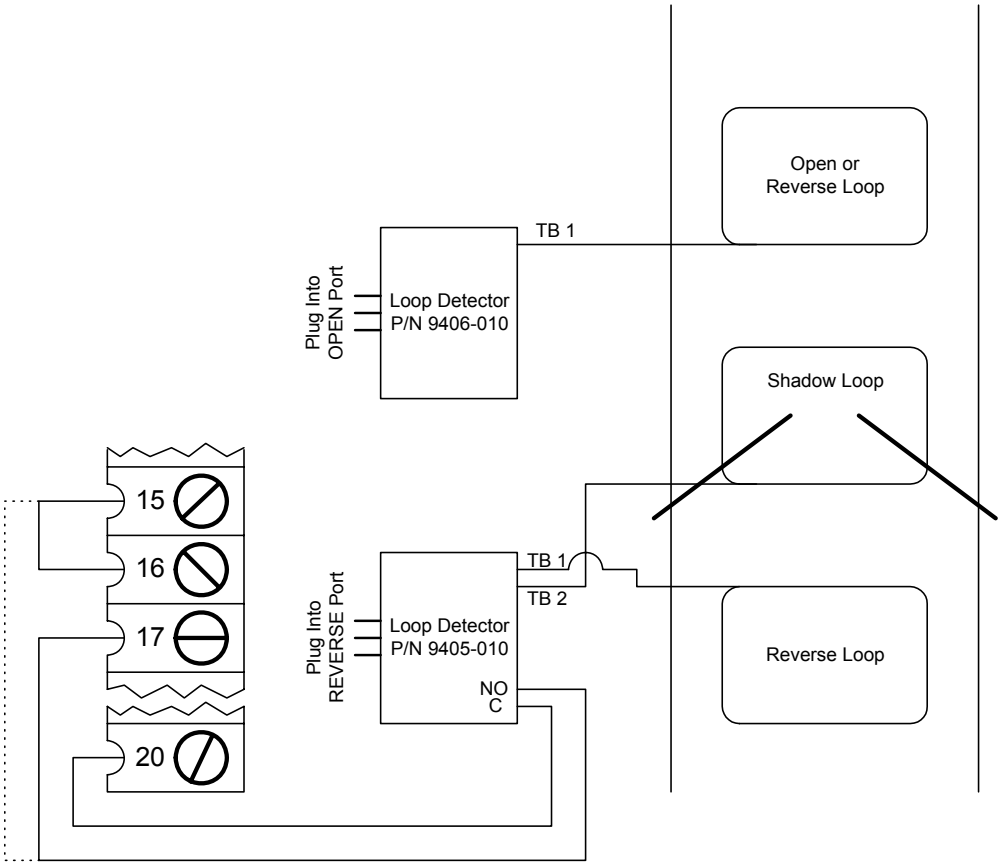

Figure 28

2.4 MAGNETIC LOCK WIRING

2.4.1 DIRECT POWER

- Connect the magnetic lock as shown in Figure 29.
- 24-volt magnetic lock is connected directly to terminals 16 and 19 on the 4502 circuit board. Place a jumper wire from terminal 17 to terminal 18. 24-volt magnetic lock power is provided at terminals 18 and 19.
- Set relay contact shorting pin to **NC** (normally closed) operation (see 3.1).
- SW1, switch 1 must be in the **ON** position and SW1, switch 2 must be in the **OFF** position when connecting a magnetic lock in this manner.

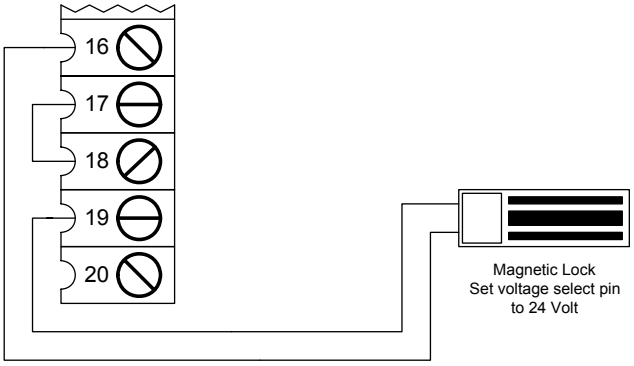

Figure 29

2.4.2 INDIRECT POWER

- Connect the magnetic lock as shown in Figure 30.
- Requires the use of a DC transformer for magnetic lock power.
- Relay shorting pin on the 4502 circuit board must be set for **NC** (Normally Closed) operation (see 3.1).
- **SW1**, switches 1 and 2 can be set in three different ways:

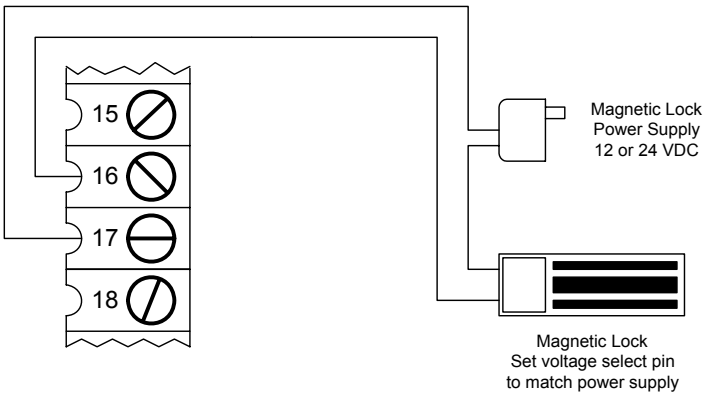

Figure 30

1. Switch 1 **OFF**, Switch 2 **ON**
2. Switch 1 **ON**, Switch 2 **OFF**
3. Switch 1 **ON**, Switch 2 **ON**

2.5 GATE TRACKER™ CONNECTIONS

This gate operator is equipped with outputs from the circuit board that will report operator status to a companion DoorKing Access Control System (Model 1803PC, 1815, 1817 or 1818) when equipped with an optional Tracker expansion board. This report includes items such as gate operator cycle count, any shorted inputs, loop detector problems, any attempts to force the gate open, if the gate has struck anything during the open or close cycle, power interruptions, etc.

Gate Tracker™ connections are made at the auxiliary terminal strip located at the bottom of the circuit board, and at terminals 7, 11 and 20 on the main terminal strip. For more detailed information on Gate Tracker™ and wiring to the Tracker expansion boards, refer to the Tracker Installation and Wiring Manual, DoorKing P/N 2351-010.

Maximum wire run for gate operator data to the tracker board is 500 feet using Belden #9931 shielded cable or Consolidated #5324-CL shielded cable. **Float the shield at the tracker board. Do not connect the shield to the tracker board common.**

Wire connection from the tracker board terminal P1-5 to the 4502 main terminal 11 is optional **if the gate operator is not to be activated by the tracker output relay.**

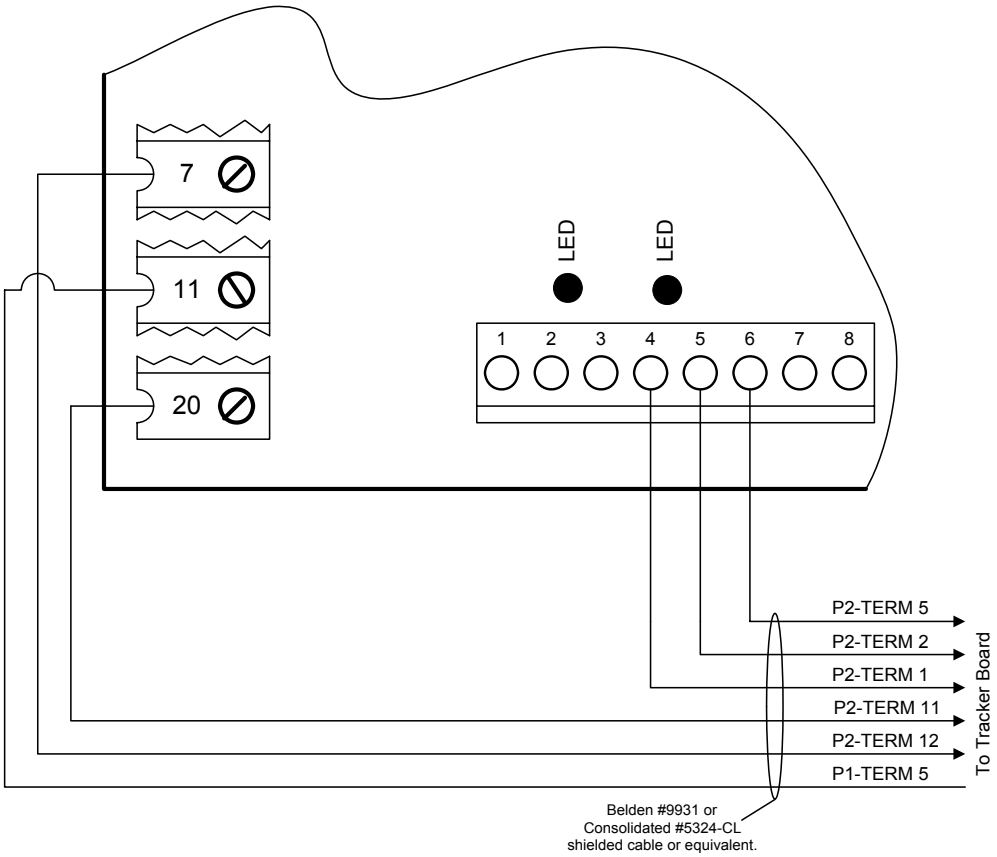

Figure 31

2.6 AUXILIARY DEVICES

2.6.1 ALARM RESET SWITCH

The gate operator is equipped with a reset switch that will silence the entrapment alarm and return the operator to normal operation after a hard shutdown occurs. An auxiliary reset button may be added provided that the following condition is met.

- The alarm-reset button must be located in the line of sight of the gate.
- Connect the normally open alarm-reset switch to auxiliary terminals 2 and 3.

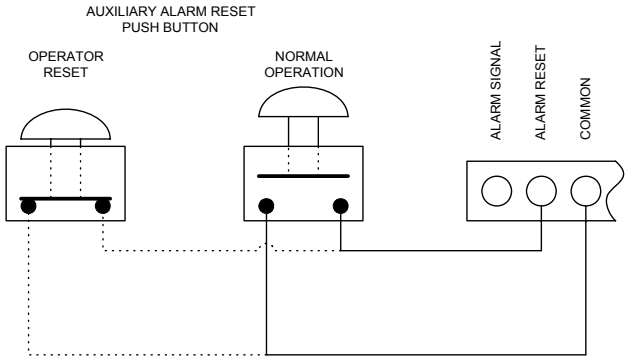

Figure 32

2.6.2 AUXILIARY STOP SWITCH

This circuit creates an auxiliary stop input that will stop a moving gate when activated, or will prevent the gate operator from starting if the switch is activated. **Note that this stop input is normally open and that a switch closure will activate the stop function. Because this is a normally open circuit, the stop switch is not intended and should not be used as a safety interlock device.**

- This circuit cannot be used if a DoorKing 3 button control station is connected to the operator.
- Place a jumper wire from terminal 13 to terminal 14.
- Connect the stop switch to terminals 14 and 20.

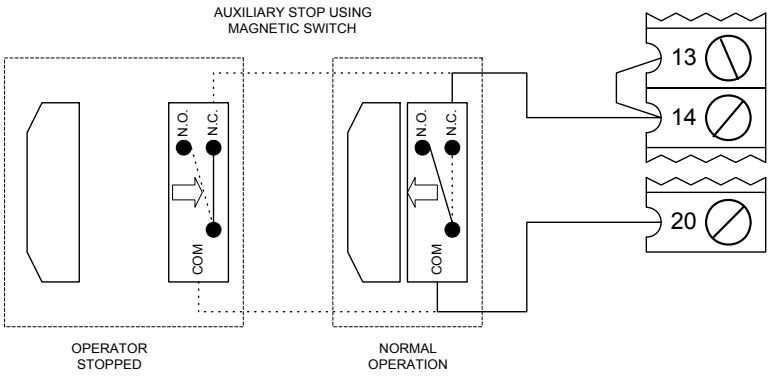

Figure 33

2.7 MAIN TERMINAL DESCRIPTION

1. 115 VAC Neutral
2. 115 VAC Neutral Output To Slave Operator
3. 115 VAC Power Input
4. 115 VAC Motor Power (Open)
5. 115 VAC Motor Power (Close)
6. Not used
7. 24 VAC Radio Receiver Power Only (250 ma. maximum)
8. 12 VAC Magnetic Counter Power Only (150 ma. maximum)
9. PULSE 1 Input From Master Operator
10. PULSE 2 Input From Slave Operator
11. SINGLE BUTTTON ACTIVATION INPUT 1

    When gate is closed, input will open gate.

    When gate is open and auto close timer is turned on, input will re-set and hold timer.

    When gate is open and auto close timer is turned off, input will close gate.

    When gate is closing, input will reverse gate.
12. SINGLE BUTTON ACTIVATION INPUT 2 / OPEN LOOP LOGIC OUTPUT

    If SW 1,switch 3 is ON, this input is identical to Single Button Activation Input 1.

    If SW 1, switch 3 is OFF, this terminal becomes the logic output of the OPEN loop detector.
13. OPEN INPUT - Use with DoorKing 3 button control station only (P/N 1200-006).
14. CLOSE INPUT - Use with DoorKing 3 button control station only (P/N 1200-006).
15. REVERSE (SAFETY) INPUT / SHADOW INPUT

    When gate is closed, this input has no affect on the gate operator.

    When gate is open and auto close timer is turned ON, input will re-set and hold timer.

    When gate is open and auto close timer is turned OFF, input will prevent gate from closing.

    When gate is closing, input will reverse gate if SW 2, switch 5 is OFF.

    When gate is closing, input has no affect on the gate operator if SW 2, switch 5 is ON.
16. DRY RELAY CONTACT

    Operation of relay is dependent on setting of SW 1, switches 1 and 2. Relay contacts can be set for Normally Open (NO) or Normally Closed (NC) operation. Contact rating is 1 amp maximum at 24 Volts.
17. DRY RELAY CONTACT
18. MAGNETIC LOCK OUTPUT

    With SW 1, switch 1 ON and switch 2 OFF, 24-volt magnetic lock power is provided constantly except when the gate is opening or open.
19. LOW VOLTAGE COMMON
20. LOW VOLTAGE COMMON

2.8 AUXILIARY TERMINAL DESCRIPTION

The auxiliary terminal is located on the 4502 circuit board just to the right of main terminals 18 and 19. Auxiliary terminals are numbered 1 through 8.

1. ALARM OUTPUT

   Provides power to activate the entrapment alarm.

2. ALARM RESET INPUT

   Input to reset the operator after an entrapment alarm.

3. COMMON

   Common for alarm output and alarm reset input.

4. TRACKER DATA

   Supplies gate operator data to Tracker expansion board (P/N 2351-010). Refer to the Tracker Installation and Wiring Manual for detailed information.

5. TRACKER DATA

   Supplies gate operator data to Tracker expansion board (P/N 2351-010). Refer to the Tracker Installation and Wiring Manual for detailed information.

6. TRACKER DATA

   Supplies gate operator data to Tracker expansion board (P/N 2351-010). Refer to the Tracker Installation and Wiring Manual for detailed information.

7. PHOTO-BEAM INPUT

   This input will cause the gate operator to stop when activated in either the opening or closing cycles. The gate operator will remain stopped until the photo-beam input is cleared, at which time the operator will resume normal operation.

8. COMMON

   Common for photo-beam input.

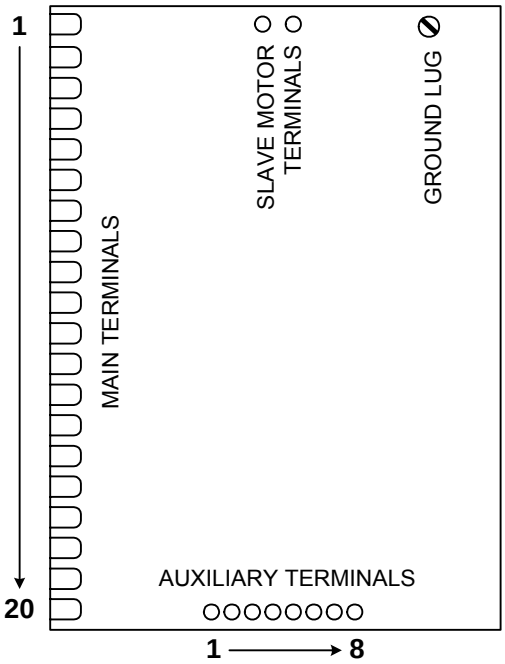

Figure 34

SECTION 3 – ADJUSTMENTS

The switch settings and adjustments in this chapter should be made after your installation and wiring to the operator(s) is complete. Whenever any of the programming switches on the circuit board are changed, power must be shut-off, and then turned back on for the new setting to take effect.

3.1 CIRCUIT BOARD ADJUSTMENTS

- Set the DIP-switches on the circuit board to the desired setting. See switch-setting charts in section 3.2.
- Auto close timer (when turned on) can be set from 1 second (full counter clockwise) to approximately 23 seconds (full clockwise).
- Dry contact relay contacts (terminals 16-17) can be set for Normally Open (NO) or Normally Closed (NC) operation by placing the relay shorting bar on the NO or NC pins respectively.
- Power LED indicates that low voltage power is applied to the circuit board. Input LEDs should be OFF and will only illuminate when an input is activated. The pulse LEDs will blink as the operator is running. They can be either ON or OFF when the operator is stopped. Tracker LEDs will flash as operator data is sent to the access controller (1803PC, 1815, 1817 or 1818).

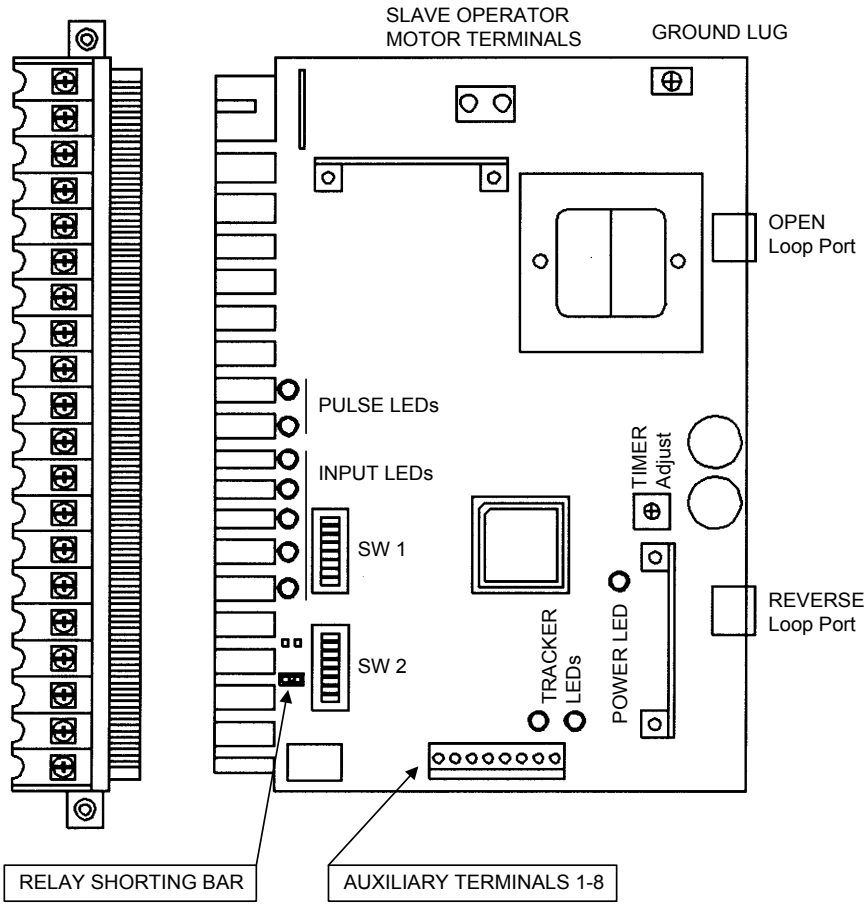

Figure 35

3.2 SWITCH SETTINGS

The two DIP-switches located on the circuit board are used to program the operator to operate in various modes and to turn on or off various operating features. Whenever a switch setting is changed, power to the operator must be turned OFF and then turned back on for the new setting to take affect. Check and review ALL switch settings prior to applying power to the operator.

SW 1 (TOP SWITCH)			
SWITCH	FUNCTION	SETTING	DESCRIPTION
1 and 2	Relay and Lock Power	1-OFF 2-OFF 1-OFF 2-ON 1-ON 2-OFF 1-ON 2-ON	Relay activated only when gate is FULL OPEN. Relay activated whenever gate is NOT CLOSED. Relay activated, magnetic lock power OFF when gate is OPENING and OPEN. Relay activated when gate is OPENING and CLOSING.
3	Open Loop Logic Output	OFF ON	Output of loop detector in OPEN port is switched to terminal 12. Output of loop detector in OPEN port feeds directly to processor.
4	Auto-Close Timer	OFF ON	Auto-close timer is OFF. Manual input required to close gate. Auto=close timer is ON. Adjustable from 1-23 seconds.
5	Slide Gate Swing Gate	OFF ON	Switch is in the OFF position for slide gate operators. Switch is in the ON position for swing gate operators.
6	3-Button Control	OFF ON	Switch must be OFF when 3-button control is used. Switch must be ON when single button control is in use.
7	Bi-parting Gates Single Gate	OFF ON	Switch is OFF when bi-parting (master-slave) gates are used. Switch is ON for single gate operation.
8	Tamper Protect	OFF ON	Tamper protect is turned OFF. Tamper protect is turned ON.

SW 2 (BOTTOM SWITCH)			
SWITCH	FUNCTION	SETTING	DESCRIPTION
1	Direction Master	OFF ON	Changes direction of MASTER operator. Set so that the operator runs in the OPEN direction upon initial activation after power-up.
2	Direction Slave	OFF ON	Changes direction of SLAVE operator. Set so that the operator runs in the OPEN direction upon initial activation after power-up.
3	Self Test	OFF ON	Normal operation. Self test. Operator must be disconnected from gate to run test.
4	Motor Control	OFF ON	Switch is OFF when both master and slave operator motors are powered from main terminals 4 and 5. Applies to operators originally manufactured with 4501, Rev O boards or lower). Switch is ON when slave operator motor is powered from the slave motor terminals. Applies to operators manufactured with 4501, Rev P boards and higher.
5	Shadow Input	OFF ON	Terminal 15 is a standard REVERSE input with this switch OFF. Terminal 15 is a SHADOW input with this switch ON.
6	Gate Overlap	OFF ON	Master and slave operators start at the same time. Slave operator starts 1-2 seconds prior to the master operator.
7	Not Used	OFF	Leave in OFF position.
8	Not Used	OFF	Leave in OFF position.

3.2.1 SW 1 (TOP SWITCH) DESCRIPTION AND FUNCTION

Switches 1-2: These work in conjunction with each other and determine when the relay on the board will be activated. This relay can be used as a switch for various functions such as illuminating a warning light when the gate is moving, or turning on a green light when the gate is full open. This relay is not available for these uses if it is being used for the shadow loop function. Also, if a magnetic lock is used with the gate operator, these switches must be set for magnetic lock operation which limits the relay to activate only when the gate is opening and full open.

Switch 3: Determines if the output of the loop detector (DoorKing loop detectors only) plugged into the OPEN port will be sent directly to the microprocessor to open the gate, or if the output is directed to terminal 12 where it can then be connected to other input terminals.

Switch 4: Turns the auto close timer on or off. Maximum time that the close timer can be set for is 23 seconds.

Switch 5: This switch enables the 4502 circuit board to be used in either a swing gate or slide gate application. Some older DoorKing slide gate operators did use the 4501 circuit board for control. This switch is here to allow use of this board on these older products.

Switch 6: Sets up the circuit board for 3-button (open-close-stop) logic when the DoorKing 3 button control station is connected to the circuit. Keep this switch in the ON position if three button control IS NOT used.

Switch 7: Sets up the circuit board for single or master / slave (dual) gate operation.

Switch 8: If the gate is forced open, the tamper protect system will start the motor in the close direction when the operator senses the forced open condition.

3.2.2 SW 2 (BOTTOM SWITCH) DESCRIPTION AND FUNCTION

Switch 1: Sets direction of the master operator so that the operator cycles open upon initial power up and open command. If the operator begins to cycle close upon initial power up and open command, turn power off and change the setting on this switch.

Switch 2: Sets direction of the slave operator so that the operator cycles open upon initial power up and open command. If the operator begins to cycle close upon initial power up and open command, turn power off and change the setting on this switch.

Switch 3: This switch is a self-test feature that checks various functions of the circuit board and is used for bench test only. **Do not run this test with the operator connected to the gate**.

Switch 4: This switch applies high voltage motor power to the two slave operator motor terminals located at the top of the board. If a master / slave system is in use, this switch should be ON and the slave motor wires connected to the slave operator motor terminals. For single gate applications, this switch can be turned OFF.

Switch 5: This switch sets the input at terminal 15 to act as a normal reverse input or to act as a shadow input. A shadow input will only hold the gate operator in the open position once it is in the full open position. **A shadow input will not reverse the direction of the gate operator once it begins its close cycle.**

Switch 6: Used in master / slave applications, turning this switch ON will cause the start of the master operator to be delayed 1-2 seconds. This allows the slave gate to reach the full close position prior to the master gate, which is desirable when the gates are constructed with an overlap or if a magnetic lock is used to secure the gates.

Switches 7-8: Spare switches. Leave these in the OFF position.

3.3 AUTOMATIC LIMIT ADJUSTMENT

This gate operator does not use any limit switches or run timers to adjust the gate open and close positions. The gate open and close positions are determined by the physical stops on the crank arm. The gate operator will automatically measure the travel distance required and set its "limits" from this measurement during this initial automatic sequence.

!! IMPORTANT !!

This automatic limit adjustment sequence must be run prior to testing the operator for normal operation, and prior to testing any of the safety features that are incorporated into this operator. This includes the primary and secondary entrapment protection features, and the entrapment alarm and reset features.

1. The limit adjustment is automatic and relies on the physical stop created by the flange on the gate arm connector assembly.
2. Turn power to the operator ON. Activate an open device (or momentarily jumper between terminals 11 and 20). The gate operator should begin to cycle the gate to the OPEN position. If the gate operator begins to cycle the gate to the CLOSED position, turn power to the operator OFF. Change the setting of the direction switch(s).

   Master or single operator, change SW 2, switch 1.

   Slave operator, change SW 2, switch 2.
3. After the initial activation with the gate running in the OPEN cycle, the clutch will slip for approximately 2 seconds after the gate reaches the full open position, and then the gate operator will shut off. Activate a keying device to close the gate (or allow the timer to close the gate if it is turned on). When the gate reaches the full closed position, the clutch will slip for approximately 2 seconds, and then the gate operator will shut off. The operator limits are now set. NOTE: During this initial setup, be sure that the operator clutch does not slip while the gate is cycling from the full open to the full closed position. If the clutch slips during this period, the limits will be misadjusted.
4. Cycle the gate again. The operator should reach the full open and full close positions and then shut off without the clutch slipping.

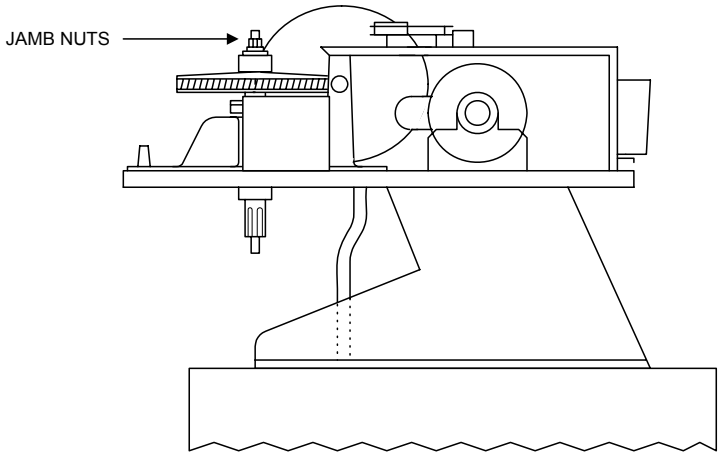

Figure 36

3.4 ENTRAPMENT SENSING SYSTEM

This vehicular gate operator is equipped with an inherent adjustable clutch (Type C) that is used as the primary entrapment sensing system. The clutch will slip upon sensing an obstruction in either the opening or closing gate cycle and will cause the gate operator to reverse direction should an obstruction be encountered. For this system to function correctly, the gate must be properly installed and work freely in both directions. A good set of roller bearing hinges is essential for proper swing gate operation.

3.4.1 CLUTCH ADJUSTMENT

1. Be sure power to the operator is turned OFF whenever adjustments to the clutch are being made. Loosen the upper jamb nut to "un-lock" the lower jamb nut then loosen the lower jamb nut. (See figure 36 on the preceding page)
2. Manually move the gate so that it is positioned approximately half way open.
3. Tighten the lower jamb nut so that it is finger tight then tighten it one turn with a wrench. Re-tighten the upper jamb nut.
4. Apply power to the gate operator and momentarily short across terminals 11 and 20 with a 1-foot piece of 18 AWG wire. When the gate begins to open, determine if the clutch is slipping. If the clutch is slipping, turn power OFF and tighten the lower jamb nut one more turn. This process may have to be repeated several times to get the right clutch adjustment. Always start the gate from the half open position when adjusting the clutch.
5. After adjusting the clutch so that the gate opens and closes without it slipping, obstruct the gate while it is in the opening cycle. The clutch should slip with no more than 40 Lbs of force for approximately 2 seconds, and then the operator should reverse the direction of travel of the gate. If the clutch does not slip, it is too tight. Repeat step 4 and re-adjust the clutch. NOTE: After the gate has reversed, the operator will be in a "soft shutdown" making it necessary to initiate the cycle again by momentarily shorting across terminals 11 and 20.
6. Repeat step 5, only this time obstruct the gate while it is in the closing cycle. The clutch should slip with no more than 40 Lbs of force for approximately 2 seconds, and then the operator should reverse the direction of travel of the gate. If the clutch does not slip, it is too tight. Repeat step 4 and re-adjust the clutch. NOTE: After the gate has reversed, the operator will be in a "soft shutdown" making it necessary to initiate the cycle again by momentarily shorting across terminals 11 and 20.
7. The ideal clutch adjustment will allow the operator to move the gate through its entire travel cycle without slipping, but will slip upon contact with an obstruction with no more than 40 Lbs of force. This force can be measured with a gate scale, DoorKing P/N 2600-225.

3.4.2 SECONDARY ENTRAPMENT PROTECTION SYSTEM

In addition to the mechanical slip clutch, this operator uses an inherent entrapment sensing system (Type A) to further reduce the possibility of injury should an entrapment occur. The secondary system is completely automatic and will be activated if the clutch fails to slip when an obstruction between the open and close limit settings is sensed. This feature requires no adjustment by the installer or end user.

SECTION 4 – OPERATING INSTRUCTIONS

IMPORTANT SAFETY INSTRUCTIONS

WARNING - To reduce the risk of injury or death:

1. READ AND FOLLOW ALL INSTRUCTIONS.
2. Never let children operate or play with gate controls. Keep the remote control away from children.
3. Always keep people and objects away from gate. NO ONE SHOULD CROSS THE PATH OF THE MOVING GATE.
4. Test the operator monthly. The gate MUST reverse on contact with a rigid object or stop or reverse when an object activates the non-contact sensors. After adjusting the force or the limit of travel, retest the gate operator. Failure to adjust and retest the gate operator properly can increase the risk of injury or death.
5. Use the emergency release only when the gate is not moving and power has been shut-off.
6. KEEP GATES PROPERLY MAINTAINED. Read the owner's manual. Have a qualified service person make repairs to gate hardware.
7. The entrance is for vehicles only. Pedestrians must use separate entrance.
8. SAVE THESE INSTRUCTIONS.

4.1 POWER AND RESET SWITCHES

Open the power switch cover located on the side of the operator to access the MAIN POWER, BACKUP POWER and the operator RESET switches (Figure 37).

- The RESET switch is used to turn off the entrapment alarm and to reset the operator after a hard shutdown has occurred.
- The AC POWER toggle switch turns power to the operator ON (toggle up) or OFF (toggle down).
- The DC POWER toggle switch turns the DC backup system power ON (toggle up) or OFF (toggle down). This switch is only installed on model 6100 operators with the DC backup system installed.

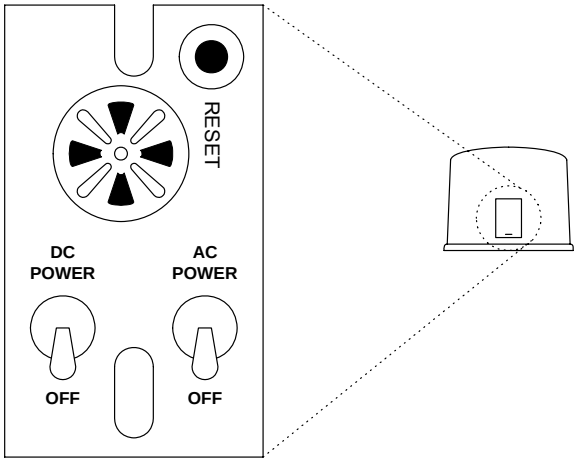

Figure 37

4.2 SHUTDOWN CONDITIONS

Under various entrapment conditions the operator will assume either a soft or hard shutdown (alarm) condition. To determine what type of reset action is required, you will need to understand how the different entrapment conditions affect the gate operator.

4.2.1 SOFT SHUTDOWN

This occurs in various situations where the inherent or secondary entrapment protection devices have been activated. In a soft shutdown condition, the operator will not respond to any input that was present when the entrapment protection device sensed an obstruction. If the gate stops at the open position, the operator will not respond to the automatic close timer.

- Example 1: A time clock keys the gate open in the morning and an entrapment protection device senses an obstruction prior to the gate reaching the full open position. If the entrapment is sensed by the inherent system, the gate will reverse and run back to the closed position. The time clock input is still present, but the gate will not re-open.

NOTE: In some systems, the time clock input comes from the telephone entry system relay. This same relay may also provide open commands for a card reader, MicroPLUS transmitters and the visitor telephone entry. If so, these devices will also be disabled in a soft shutdown condition.

- Example 2: If the gate is closing and an entrapment protection device is activated, the gate will either stop or reverse and run back to the open position, depending upon if the secondary or inherent device was activated. The automatic close timer will not close the gate.
- Example 3: Vehicle arrives at open loop and gate runs towards the open position. The inherent entrapment protection is activated. The gate reverses and runs back to the closed position. If the vehicle is still present at the open loop a soft shutdown condition does not occur. The loop input provides an immediate reset of the operator and the gate will again run to the open position.

4.2.2 RESETTING A SOFT SHUTDOWN

In some conditions, a soft shutdown will reset as soon as the entrapment condition clears. For example, if a non-contact sensor (photo cell) is sensing an obstruction, the operator will stop the gate and assume a soft shutdown condition. When the photocell clears, the operator will return to normal operation.

When the operator is in a soft shutdown, activation of any "intended input" will reset the operator. An "intended input" includes any command, any standard safety input and any loop input. Activating any of these inputs will reset the gate. At that point the gate will return to normal operation. If the gate is open, the automatic close timer will then time out and close the gate.

4.2.3 HARD SHUTDOWN

A hard shutdown condition occurs when the inherent entrapment protection system has sensed two consecutive obstructions before the gate reaches the full open or closed position.

- Example: The gate is closing and the inherent entrapment protection system senses an obstruction and causes the gate to reverse direction. As the gate begins to run in the open direction, a second obstruction is sensed prior to the gate reaching the full open position. Once the second obstruction has been sensed, the operator will stop, the audio alarm will be activated and all standard inputs are shut down (including open commands, safety commands, loop inputs, etc.).

- NOTE: The audio alarm will remain activated for a maximum of five minutes, or until the operator receives a reset input. The hard shutdown condition will remain in affect even if the audio alarm shuts off after five minutes.

- After 5 minutes, the audio alarm will “chirp” every 5 seconds. This indicates that the operator is in a hard shutdown condition and the reset switch must be activated to reset the operator and silence the alarm.

4.2.4 RESETTING A HARD SHUTDOWN

When the operator is in a hard shutdown condition (audio alarm activated or audio alarm “chirps” every 5 seconds), the only way to reset the gate operator and return it to normal operation is to activate the alarm reset input (auxiliary terminals 2 and 3). An alarm-reset switch can be mounted external of the gate operator provided that it is installed in the line of sight of the gate and gate operator.

- Before resetting a hard shutdown, determine why the shutdown occurred. Inspect the gate for any obstructions along its path that could have activated the inherent entrapment sensing system. Inspect the gate and gate hardware.
- NOTE: DoorKing operators have a built-in alarm reset push button mounted on the operator above the power ON-OFF toggle switch. Activating this button will return the gate operator to normal operation, but will not activate the gate operator.

Once the gate has been reset, an open or close command is needed to start the gate operator. Most activating commands will cause the gate operator to cycle to the open position. This includes activation of a key switch or open command and activation of an open loop. Activation of a close command will run the gate to the closed position.

- NOTE: The gate operator will not lose its limit settings when a hard shutdown occurs.

4.3 MANUAL / EMERGENCY GATE OPERATION

This operator is equipped with a manual release system that will allow the gate to be pushed open in the event of a power outage or equipment failure.

NOTE: Never attempt to manually push open any gate with an operator attached to it until you have verified that power to the operator has been shut-off.

4.3.1 EMERGENCY VEHICLE ACCESS CONDITIONS

The automatic vehicular gate system must be designed to allow access to emergency vehicles under different operating conditions.

1. During normal powered operation, emergency vehicles access the gate by use of the emergency vehicle access device installed on your gate system. The type of device that is used in your community is dependent on your city codes. These devices may include (but are not limited to) Fire Department lock boxes, Click-2-Enter radio receivers, strobe light sensors, siren sensors, etc.
2. In the event of a power failure, the emergency vehicle access device may not be functional because the gate operator is un-powered. If the gate operator is equipped with a battery back-up system, this system will automatically open the gate when primary (AC) power is removed. NOTE: DC powered back-up systems are optional and your gate system may or may not be equipped with one. Check with your installer to determine if your gate system is equipped with a back-up power system.
3. In the event of a primary (AC) power failure and a back-up system (DC) power failure (low charged or dead batteries for example), the system must have a release system to allow the gate to be manually operated. The release device must be accessible from either side of the gate and must be present so that emergency personnel can gain access through the gate under this condition.

4.3.2 FAIL-SAFE MANUAL OPERATION

The FAIL-SAFE manual operation system is the most reliable and safest method for placing an automated gate in manual operation and is the preferred method of emergency gate operation under worse case conditions by many Fire Chiefs and Building Inspectors and is typically used in CLASS I and CLASS II applications. This system requires no keys, cranks or tools for manual gate operation and is completely automatic. This prevents any delays for emergency vehicle access in the event that a power outage has occurred.

- When AC power is removed (power failure or switch power off), the operator "FAILS" in a "SAFE" condition allowing the gate to be manually pushed open without the need of any tools, keys, cranks or other devices. This assures emergency vehicle access under the worst-case conditions.
- For manual fail-safe gate operation, turn power to the operator OFF. If a backup power system is in use, be sure that this power is turned OFF also. Once power is OFF, the gate can be manually operated.

1. Pull the gate arm (figure 38) that is attached to the operator shaft away from the gate so that the knuckle joint is slightly "broken" (figure 39).
2. Go to the end of the gate and pull it open.

- If an attempt is made to force the gate open under normal operating conditions (AC power present), a tamper protect circuit will detect the forced entry and will start the motor to return the gate to the closed position. If Gate Tracker reporting is in use, a forced entry attempt transaction will be sent to the DoorKing access control system at this time.

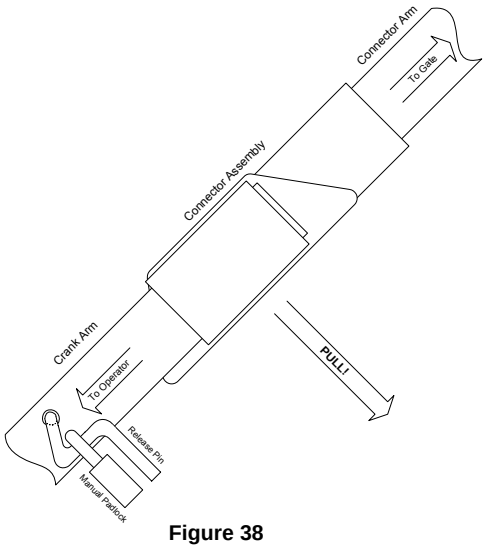

Figure 38

4.3.3 MANUAL RELEASE

In addition to FAIL-SAFE manual operation, this operator also employees a locked release pin to place the gate in manual operation when primary (AC) power is removed.

- Be sure that primary (AC) and backup (DC) power is removed or shut-off prior to placing the gate operator in manual operation.
- Unlock and remove the padlock on the operator crank arm (figure 38) and then pull the release pin.
- The gate can now be manually operated.

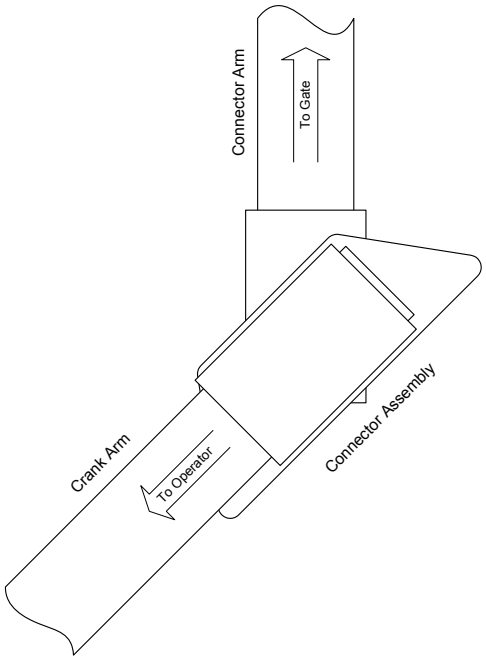

Figure 39

SECTION 5 – MAINTENANCE AND TROUBLESHOOTING

Inspection and service of this gate operator by a qualified technician should be performed anytime a malfunction is observed or suspected. High cycle usage may require more frequent service checks.

5.1 MAINTENANCE

When servicing the gate operator, always check any secondary (external) reversing devices (loops, photo eyes, etc.) for proper operation. If external reversing devices cannot be made operable, do not place this operator in service until the malfunction can be identified and corrected.

Always check the inherent reversing system when performing any maintenance. If the inherent reversing system cannot be made operable, remove this operator from service until the cause of the malfunction is identified and corrected. Keeping this operator in service when the inherent reversing system is malfunctioning creates a hazard for persons which can result in serious injury or death should they become entrapped in the gate.

When servicing this gate operator, always turn power **OFF!!**

MAINTENANCE SCHEDULE		MONTHLY INTERVAL		
		3	6	12
Alarm	Activate the primary (inherent) reverse system by blocking the gate with a solid object. When the gate reverses, block the gate in the opposite direction prior to the limit being reached. The entrapment alarm should activate. Press the reset button to silence the alarm.	✓		
Arms	Check set screws and nuts. Check bushings for wear.		✓	
Backup System	If operator is equipped with option DC backup system, check to be sure the system opens the gate upon loss of AC power.	✓		
Batteries	If operator is equipped with optional DC backup system, check the batteries for any leakage or loose connections. Batteries should be replaced every two years.	✓		
Drive Belt	Check for alignment, tightness and wear.		✓	
Fire Dept.	Check emergency vehicle access device for proper operation.	✓		
Gate	Inspect for damage. Check gate hinges for wear and grease if necessary.		✓	
Gear	Inspect for wear. Grease if necessary. Use only EP Molybdenum Disulfide (Moly D) grease (DoorKing P/N 2600-770).		✓	
Grease	Main shaft zert fitting.		✓	
Primary Reverse System	Check that the gate reverses on contact with an object in both the opening and closing cycles. Adjust the clutch if necessary.	✓		
Loop(s)	Check vehicular reverse and shadow loops for proper operation.	✓		
Release	Check manual release for proper operation.	✓		
Secondary Reverse Device	Check secondary (external) reverse device(s) stop or reverse the gate when activated.	✓		
Worm Gear	Inspect for wear and proper alignment.		✓	
Complete	Complete check of gate and gate operating system.			✓

5.2 TROUBLESHOOTING

Have a good VOM meter to check voltages and continuity. A Meg-Ohm meter capable of checking up to 500 meg-ohms of resistance is necessary to properly check the integrity of the ground loops. When a malfunction occurs, isolate the problem to one of three areas: 1) the operator, 2) the loop system, 3) the keying devices. **Use caution when checking high voltage areas: terminals 1 through 6, the motor capacitor and the motor**.

1. Check the input indicator LEDs. They should only come ON when a keying device (card reader, push button, etc.) is activated. If any of the input LEDs are ON continuously, this will cause the gate operator to hold open. Disconnect the keying devices one at a time until the LED goes OFF.
2. Check any external secondary entrapment protection devices. Any short or malfunction in these devices can cause the gate operator to stop or to hold open.
3. A malfunction in a loop or loop detector can cause the gate operator to hold open, or to not detect a vehicle when it is present over the loop. Pull the loop detector circuit boards from the loop ports on the operator circuit board. If the malfunction persist, the problem is not with the loop system. For more information on trouble shooting loops and loop detectors, refer to your loop detector instruction sheet and to the DoorKing Loop and Loop Detector Information Manual.
4. Check to be sure that there are no shorted or open control wires from the keying devices to the gate operator. If a keying device fails to open the gate, momentarily jumper across terminals 11 and 20 on the gate operator circuit board. If the gate operator starts, this indicates that a problem exist with the keying device and is not with the gate operator.
5. If a three-button control station (open-close-stop) is connected to this gate operator, check for proper wiring. Only a DoorKing three button control station (P/N 1200-006) can be used with this gate operator. Others will cause a malfunction.
6. Check the high voltage supply. A voltage drop on the supply line (usually caused by using too small supply voltage wires) will cause the operator to malfunction. Refer to the wire size chart in section 2.1.

TROUBLESHOOTING	
SYMPTON	POSSIBLE SOLUTION(S)
Operator will not run. Power LED is OFF.	• Check that power to the operator is turned ON. • Transformer may be overheated. Turn power off and allow board to cool for several minutes then retest. Check for low 115 VAC power and low voltage shorts. • Check for 115 VAC at terminals 2 and 3. If voltage measures OK, check the terminal strip or replace the circuit board.
Operator will not run. Power LED is ON.	• Momentarily jumper terminal 11 to terminal 20. If the input LED does not come ON, check the terminal strip or replace the circuit board. If LED does come ON, proceed to next steps. • Remove circuit board. With power ON, momentarily jumper terminal 3 to terminal 4 with a 14 AWG insulated jumper wire. **CAUTION – HIGH VOLTAGE**. The motor should run. • With power ON, momentarily jumper terminal 3 to terminal 5 with a 14 AWG insulated jumper wire. **CAUTION – HIGH VOLTAGE**. The motor should run in the opposite direction of the above step. • If the motor runs in both steps above, replace the control board. If the motor does not run, or runs in only one direction, problem can be a bad motor, motor capacitor, wire connections from the control board to the motor or a bad control board.
Slave operator motor will not run.	• Check that SW-2, switch 2 is ON. • Remove circuit board. Momentarily jumper terminal 3 to one of the slave motor terminals, then to the other slave motor terminal with a 14 AWG insulated jumper wire. **CAUTION – HIGH VOLTAGE**. The slave motor should run one way, then the other way as power is applied to each terminal. • If the slave motor runs in both directions, replace the control board. If slave motor does not run, or runs in only one direction, problem can be in the wiring from the master to slave operator, bad slave motor or motor capacitor.

Gate opens a short distance, then stops and reverses.	• Check that the clutch is adjusted properly and is not slipping. • Disconnect the gate from the gate operator and check that the gate swings freely without any binding. • Check that SW-1, switch 7 is set correctly. • Check the PULSE LED on the circuit board. PULSE 1 should blink as the master (or single) operator is running. PULSE 2 should blink as the slave operator is running. If either PULSE LED is not blinking as the respective operator is running, check that the magnetic sensor is within 1/32 inch of the magnetic counter ring. • Replace the magnetic sensor. • Replace the circuit board.
Gate opens but will not close.	• Check the input LEDs. Any ON will hold the gate open and indicates a problem with a keying device. • Check the secondary safety devices. Any activated will hold the gate open and indicates a problem with the safety device. • Check the loop detectors. Any activated can hold the gate open and indicates a problem with the loop detector or ground loop. • Operator may be in a "soft shutdown." Activate any keying device to determine if operator returns to normal operation. • If automatic close is desired, be sure SW-1, switch 4 is ON. • Check motor as described on previous page.
Gate closes but will not open.	• Operator may be in a "soft shutdown." Check input LEDs on terminals 11, 12 and 13. If any are ON, momentarily disconnect, then re-connect the wire going to the respective terminal. Operator should open. • Check to be sure that the operator is running in the proper direction. Turn power OFF, and then back ON. Activate a keying device. Operator should run in the open direction. If operator runs in the close direction, turn power OFF and change direction switch SW-2, switches 1 and/or 2. Go to above section if operator now opens but will not close. • Be sure that the respective LED on the control board lights when the keying device connected to the respective terminal is activated. If LED does not light, momentarily place a jumper wire from terminal 20 to the input terminal being checked. If LED lights and gate opens, problem is with the keying device. If LED does not light, replace control board. • Check motor as described on previous page.
Gate starts to close, then reverses to open.	• Check that the clutch is adjusted properly and is not slipping. • Disconnect the gate from the operator and check that the gate operates freely without any binding. • Check the loop detector LEDs and input LEDs. Any that flash ON will cause the gate to reverse. • If a shadow loop is used, check for proper wiring. A mis-wired shadow loop detector will cause the gate to reverse. • Check the PULSE LED on the circuit board. PULSE 1 should blink as the master (or single) operator is running. PULSE 2 should blink as the slave operator is running. If either PULSE LED is not blinking as the respective operator is running, check that the magnetic sensor is within 1/32 inch of the magnetic counter ring. • Replace the magnetic sensor. • Replace the circuit board.
Gate closes and then re-opens.	• Check for any input or loop detector LEDs that are ON. • Check that the operator is running in the proper direction (see "gate closes but will not open" above). • Check that SW-1, switch 5 is set correctly.
Alarm sounds for 5 minutes and then beeps once every 5 seconds. Operator will not run.	• Operator is in a "hard shutdown" condition. Reset switch must be activated to return operator to normal operation.
Battery backup system will not open gate upon AC power outage.	• Check if backup system is set to open gate automatically or requires an input to open. • Check that the backup system power switch is in the ON position. • Check the batteries for proper voltage. Replace if necessary. • Replace the backup system circuit board.

5.3 ACCESSORY ITEMS

The following accessory items are available for the model 6050 and 6100 swing gate operators.

Contact Sensors	Contact sensors for use as a secondary entrapment protection device. Miller Edge, Inc., MGO20, MGR20, MGS20
Photo Cell	Non-contact (photo-cells) sensors for use as a secondary entrapment protection device. EMX Industries, Inc., Model IRB-325 MMTC, Inc., Model E3K-R10K4-NR
Loop Detector	Detectors plug directly into ports on circuit board simplifying wiring. P/N 9405-010 - Single channel detector P/N 9406-010 – Two-channel detector
Magnetic Lock	Magnetic lock provides an excellent means to secure swing gates and is a fail-safe device allowing emergency vehicle access upon power outage. DoorKing DKGL-S12-1 and DKGL-S12-1L
Control Station	Three button interior and exterior control stations provide manual open-close-stop gate operation. P/N 1200-006
M/S Cable	Master / slave wire cable contains all the necessary wires to interconnect master / slave operators. Cable length 30 feet. P/N 2600-755 Cable length 40 feet. P/N 2600-756 Cable length 50 feet. P/N 2600-757
Time Clock	7 day and 365 day time clocks can be used to automatically open gate at pre-set time and days. Compact clock fits inside the operator. P/N 2600-791 - 7 day clock P/N 2600-795 - 365 day clock
Torsion Rods	Torsion rod assembly is used on uphill swing gates for counter balance. P/N 1203-083
Hinges	Heavy-duty ball bearing hinges provide easy swing gate operation. P/N 1200-009 - Two required.
Surge Devices	High and low voltage surge suppressers help prevent circuit board failure caused by lightning strikes and power surges. P/N 1876-010 - High Voltage, P/N 1878-010 - Low Voltage
Moly D Grease	Molybdenum Disulfide (Moly D) multi-purpose grease for worm gear. P/N 2600-770 - 14 oz. tube
Base Plate	Optional base plate is used to pad mount the operators equipped with mounting posts. P/N 2600-644
Gate Scale	Use to test torque required to move gate. P/N 2600-225
Speed Bumps	Prefabricated six-foot speed bump reduces traffic speed through gate system. P/N 1610-150

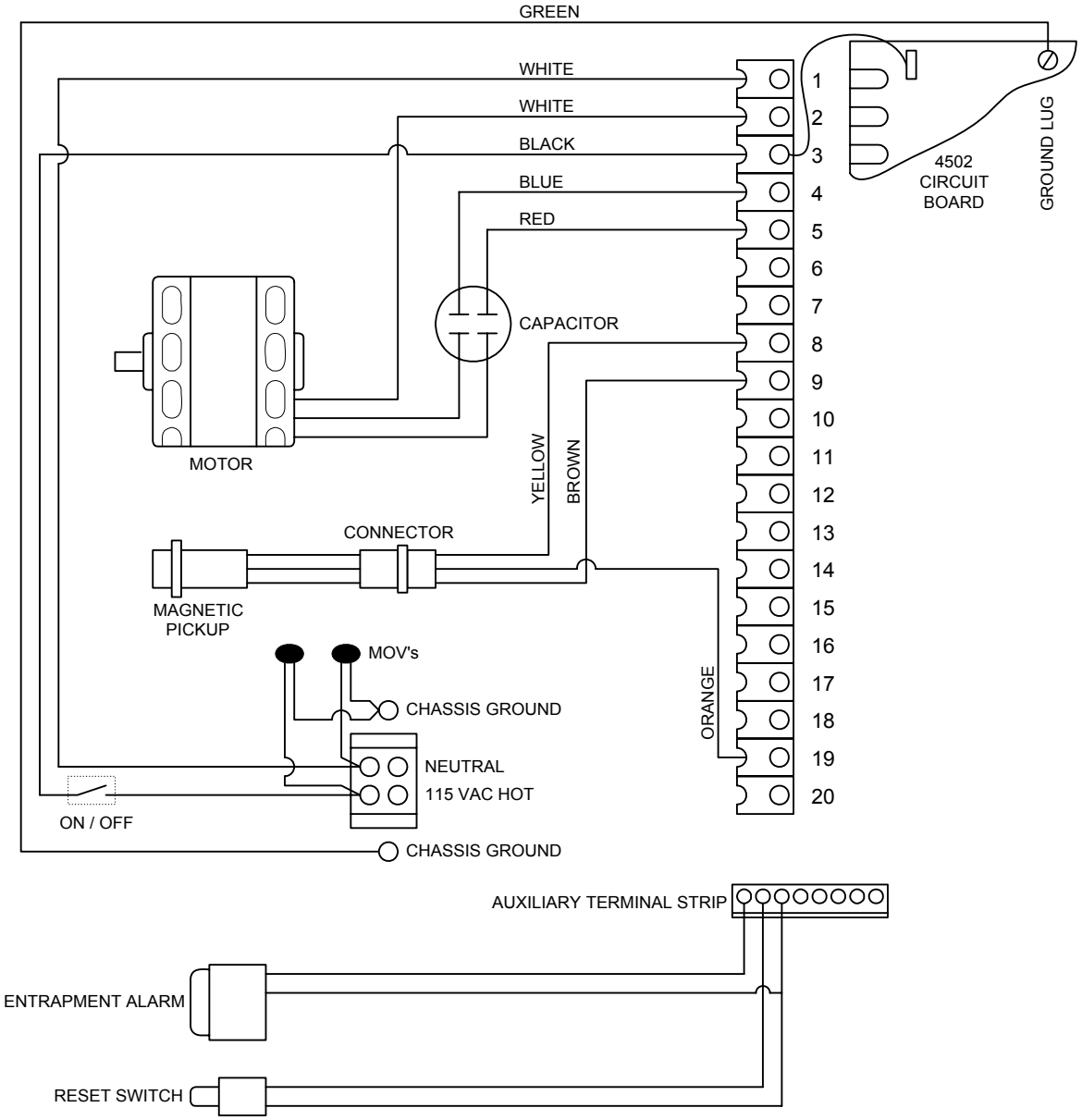
GREEN
WHITE
WHITE
BLACK
BLUE
RED
1
2
3
4
5
6
7
8
9
10
11
12
13
14
15
16
17
18
19
20
4502
CIRCUIT
BOARD
GROUND LUG
CAPACITOR
MOTOR
YELLOW
BROWN
CONNECTOR
MAGNETIC
PICKUP
MOV's
CHASSIS GROUND
ORANGE
NEUTRAL
115 VAC HOT
ON / OFF
CHASSIS GROUND

AUXILIARY TERMINAL STRIP
ENTRAPMENT ALARM
RESET SWITCH

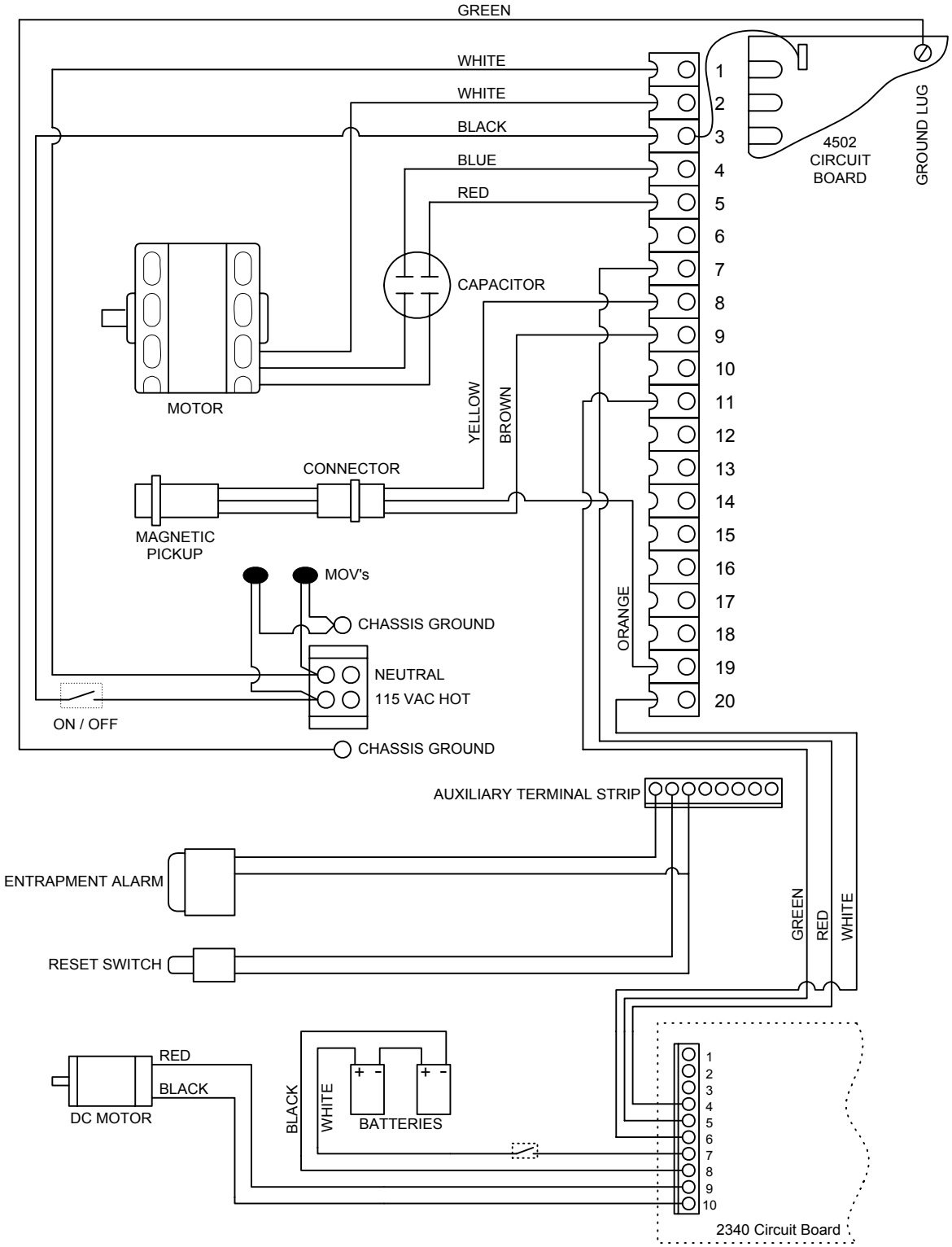
GREEN
WHITE
WHITE
BLACK
BLUE
RED
1
2
3
4
5
6
7
8
9
10
11
12
13
14
15
16
17
18
19
20
4502
CIRCUIT
BOARD
GROUND LUG
CAPACITOR
MOTOR
YELLOW
BROWN
CONNECTOR
MAGNETIC
PICKUP
MOV's
CHASSIS GROUND
NEUTRAL
115 VAC HOT
ON / OFF
CHASSIS GROUND
ORANGE
AUXILIARY TERMINAL STRIP
ENTRAPMENT ALARM
RESET SWITCH
GREEN
RED
WHITE
RED
BLACK
DC MOTOR
BLACK
WHITE
BATTERIES
2340 Circuit Board

6050-080 SWING GATE OPERATOR MASTER
6050-081 SWING GATE OPERATOR SLAVE 03/00

NOTE A: SLAVE OPERATOR DO NOT HAVE CONTROL BOARD.
NOTE B: ALL PART #,S IN BOXS ARE ASSEMBLIES.
INFORMATION PACKET NOT DRAWN 2560-004.

NOTE: A NOT USED IN SLAVE OPERATORS

POST MOUNT ACCESSORY KIT
2600-693
PAD MOUNT ACCESSORY KIT
2600-691

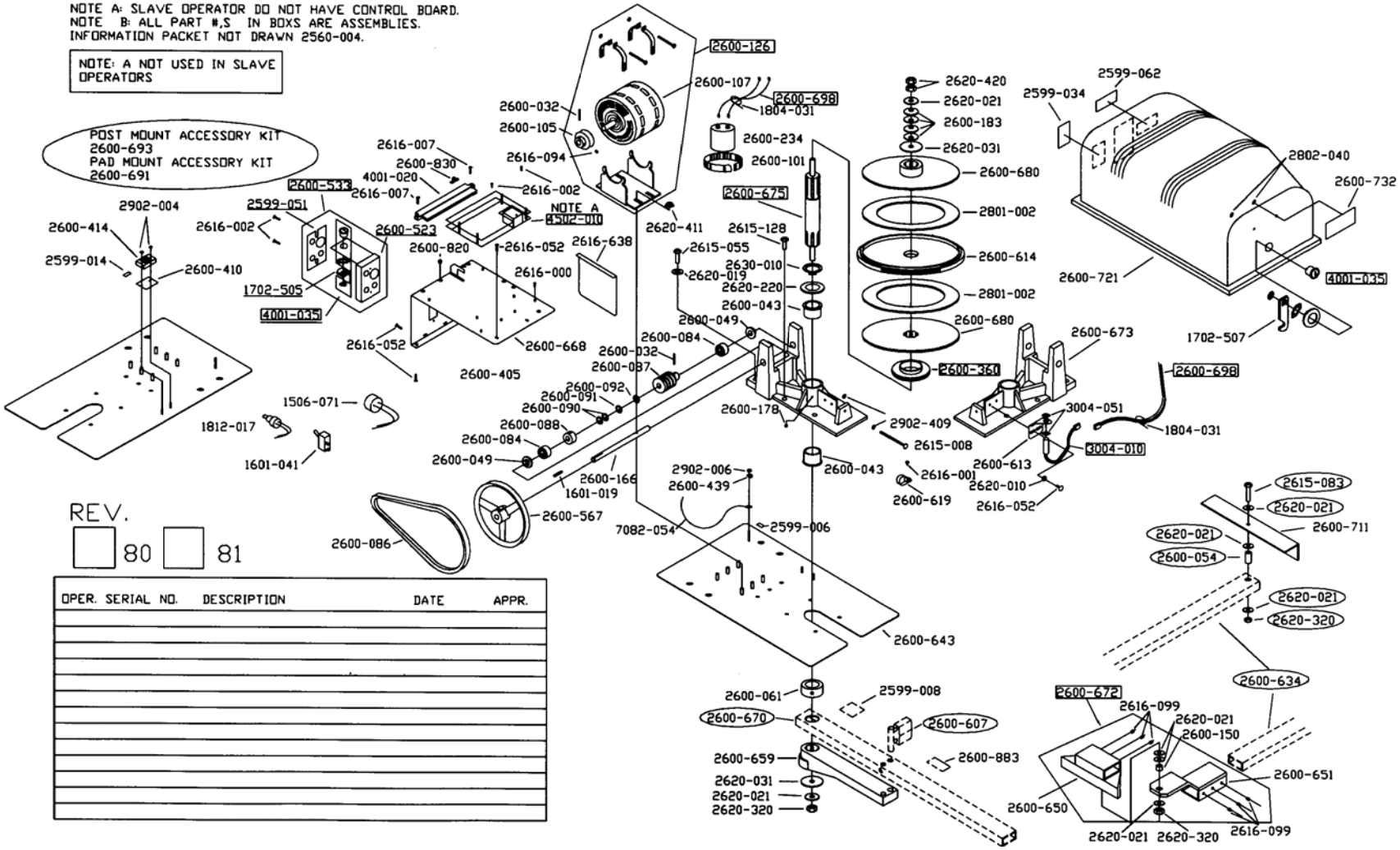

REV.

☐ 80 ☐ 81

OPER.	SERIAL NO.	DESCRIPTION	DATE	APPR.

6100-080 SWING GATE OPERATOR MASTER
6100-081 SWING GATE OPERATOR SLAVE 03/00

NOTE A: SLAVE OPERATOR DO NOT HAVE CONTROL BOARD.
NOTE B: ALL PART #,S IN BOXS ARE ASSEMBLIES.
INFORMATION PACKET NOT DRAWN 2560-004.

NOTES THESE ITEMS ARE IN ACCESSORY BOX FOR POST MOUNT 2600-693 OR PAD MOUNT 2600-691.

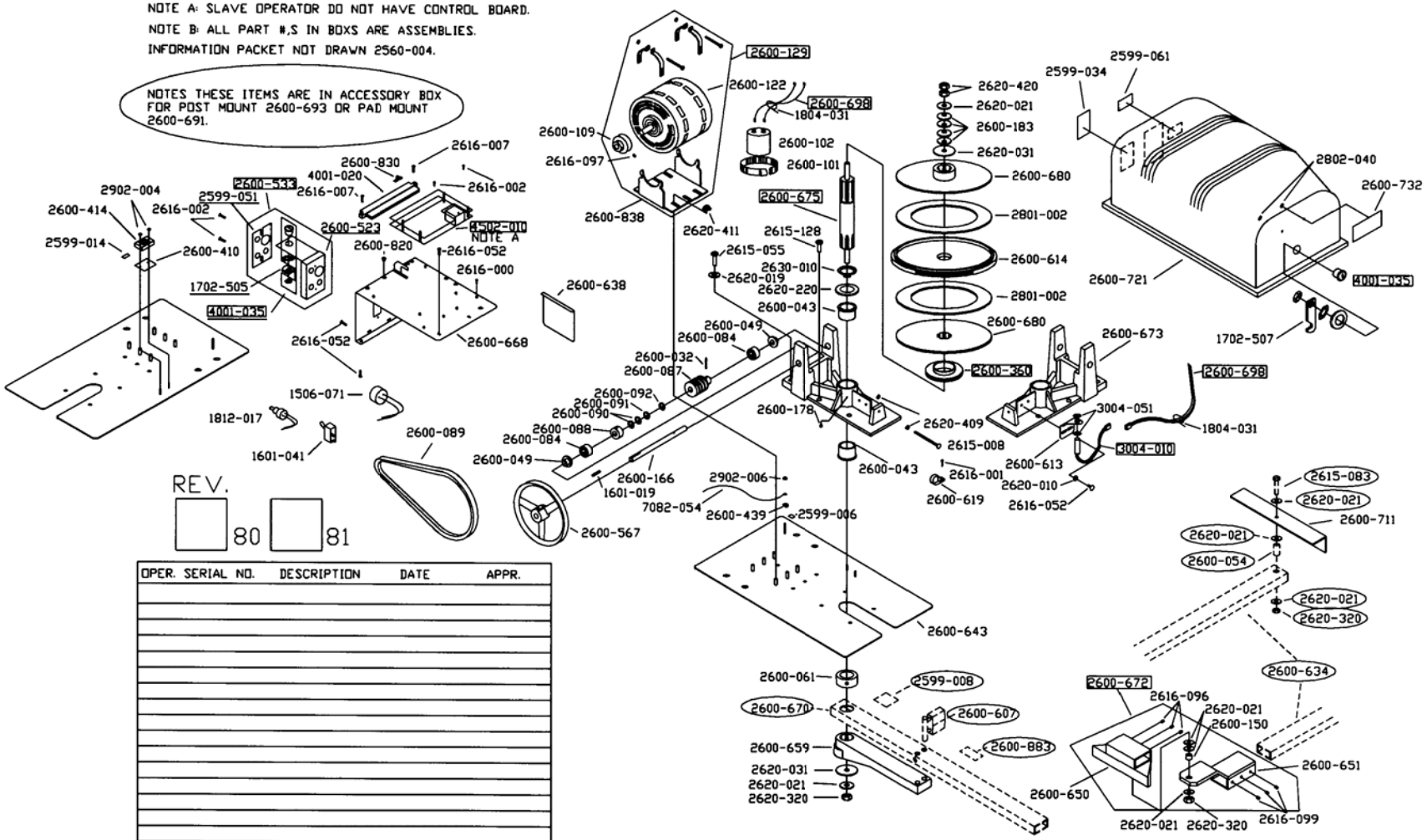

REV.

80 81

OPER.	SERIAL NO.	DESCRIPTION	DATE	APPR.

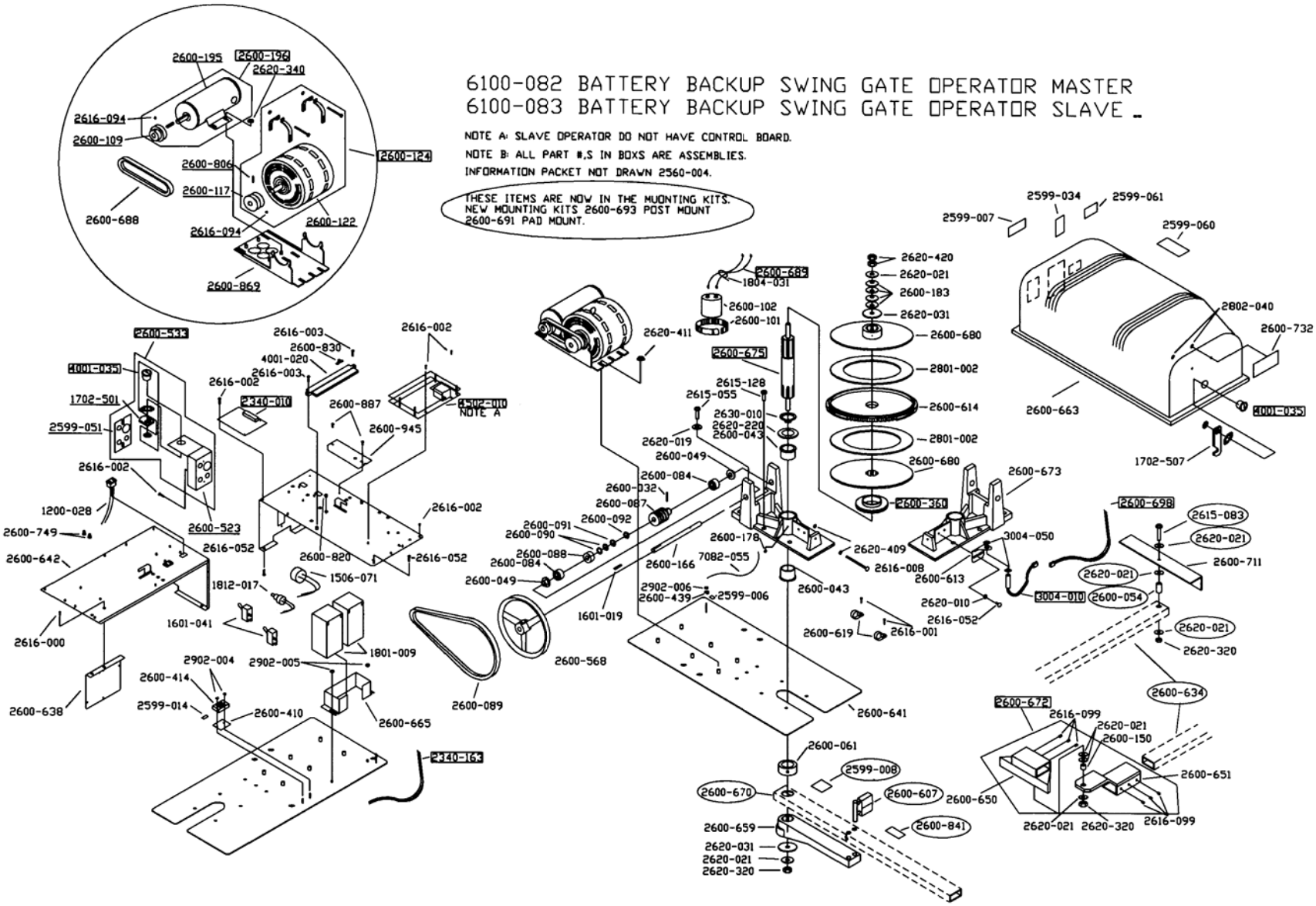
6100-082 BATTERY BACKUP SWING GATE OPERATOR MASTER
6100-083 BATTERY BACKUP SWING GATE OPERATOR SLAVE
NOTE A: SLAVE OPERATOR DO NOT HAVE CONTROL BOARD.
NOTE B: ALL PART #,S IN BOXS ARE ASSEMBLIES.
INFORMATION PACKET NOT DRAWN 2560-004.
THESE ITEMS ARE NOW IN THE MUONTING KITS.
NEW MOUNTING KITS 2600-693 POST MOUNT
2600-691 PAD MOUNT.
2600-195
2600-196
2620-340
2616-094
2600-109
2600-806
2600-117
2600-124
2600-122
2600-688
2616-094
2600-869
2600-533
4001-035
1702-501
2599-051
2616-002
1200-028
2600-749
2600-642
2600-523
2616-052
2616-000
2600-638
2616-003
2600-830
4001-020
2616-003
2616-002
2340-010
2600-887
2600-945
2616-002
8502-010
NOTE A
2616-002
2600-820
2616-052
1506-071
1812-017
1601-041
1801-009
2902-004
2902-005
2600-414
2599-014
2600-410
2600-665
2340-163
2600-089
2600-568
2600-689
1804-031
2600-102
2600-101
2620-411
2600-675
2615-128
2615-055
2630-010
2620-220
2600-043
2620-019
2600-049
2600-084
2600-032
2600-087
2600-092
2600-091
2600-090
2600-088
2600-084
2600-049
2600-166
7082-055
2600-178
2902-006
2600-439
2599-006
1601-019
2600-043
2620-409
2616-008
2600-613
2620-010
2616-052
2600-619
2616-001
2600-641
2600-061
2599-008
2600-670
2600-607
2600-650
2600-659
2600-841
2620-031
2620-021
2620-320
2620-420
2620-021
2600-183
2620-031
2600-680
2801-002
2600-614
2801-002
2600-680
2600-360
2600-673
3004-050
3004-010
2600-054
2600-698
2615-083
2620-021
2600-711
2620-021
2620-021
2620-320
2600-634
2600-672
2616-099
2620-021
2600-150
2600-651
2620-021
2620-320
2616-099
2599-034
2599-061
2599-007
2599-060
2802-040
2600-732
2600-663
4001-035
1702-507