Actuator Arm and Control Box Mounting

6002

Vehicular Swing Gate Operator

To wire this operator and complete the installation, refer to a specific control box "Wiring/Owner's manual".

6002-065-Y-1-13

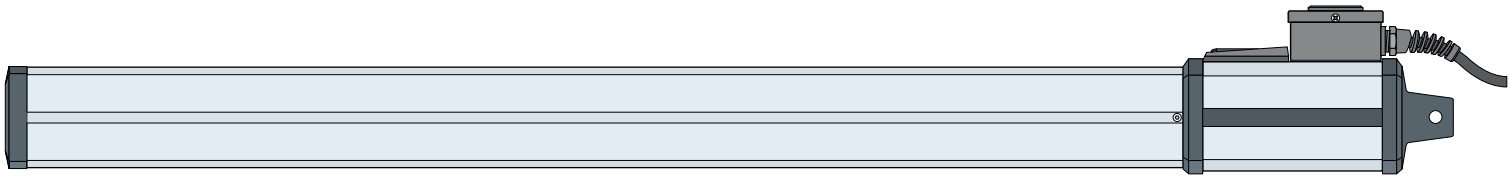

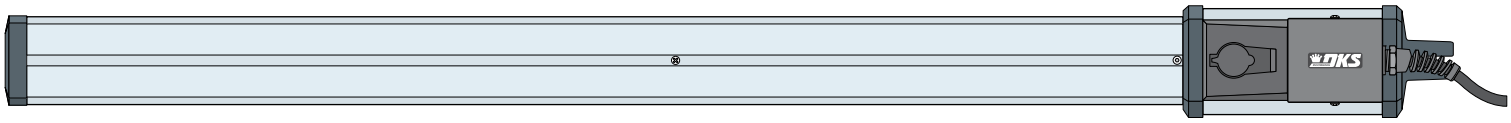

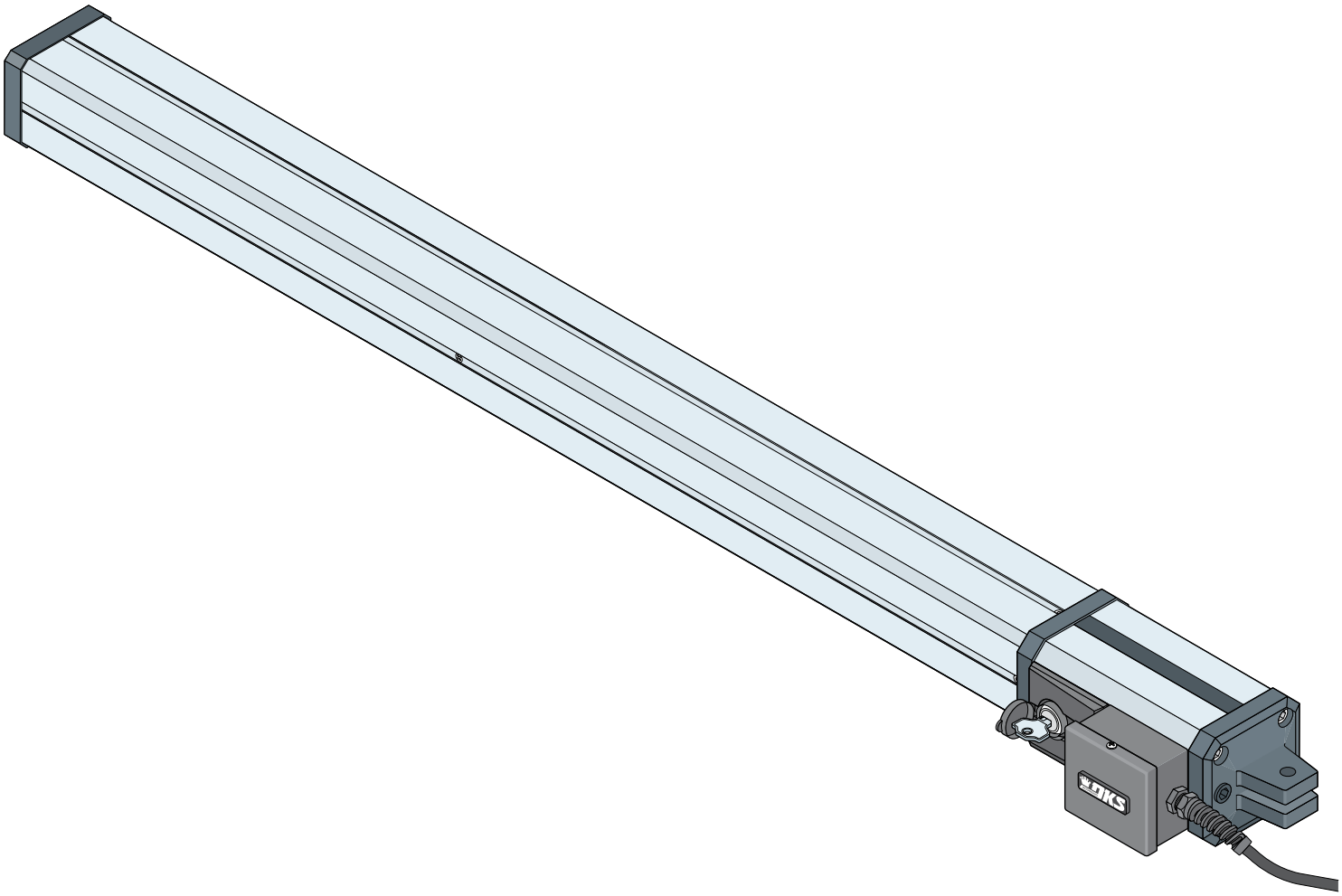

Copyright 2013 DoorKing, Inc. All rights reserved.

UL 325 Compliant

DOORKING®, INC.

6002 SPECIFICATIONS

Class of Operation	Model 6002 - UL 325 Class I
Type of Gate	Vehicular Swing Gates Only
Actuator Arm Voltage	24 VDC
Current	3 Amps
Motor RPM	1400
Maximum Thrust	300 daN
Max Gate Weight	500 Lbs.
Max Gate Length	14 Feet
Useful Rod Stroke	14 inches of travel
Cycles Per Hour	10 Per Hour with AC connected (Cycles will vary with battery power ONLY)
Speed	90° in approximately 15 seconds
Control Box Types	• 115 VAC 60 Hz Single Phase Input Power - 24 VDC Output Power to Gate Operators • 24 Volt Solar Input Power - 24 VDC Output Power to Gate Operators

Actuator Arm

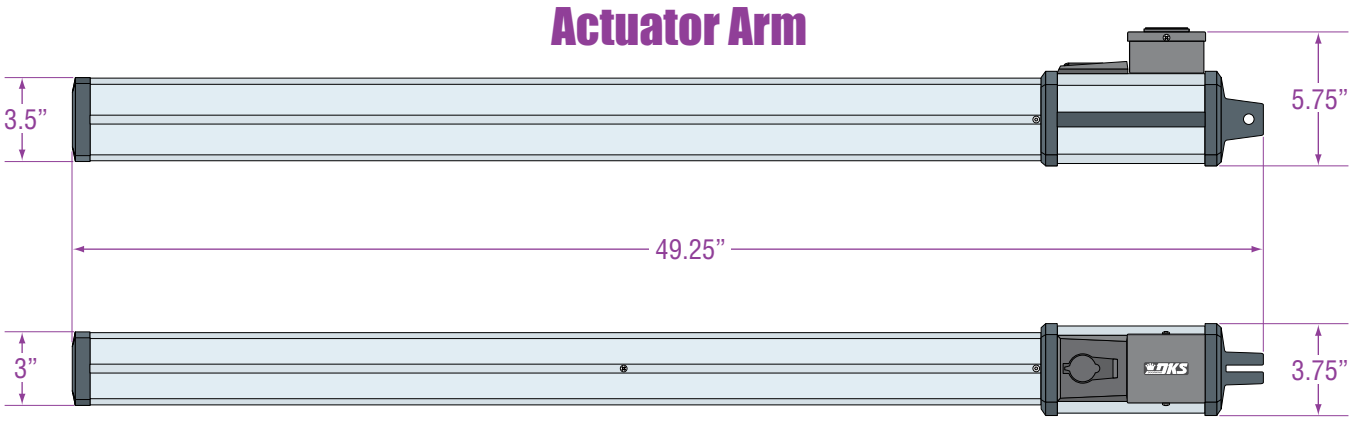

DoorKing, Inc. reserves the right to make changes in the products described in this manual without notice and without obligation of DoorKing, Inc. to notify any persons of any such revisions or changes. Additionally, DoorKing, Inc. makes no representations or warranties with respect to this manual. This manual is copyrighted, all rights reserved. No portion of this manual may be copied, reproduced, translated, or reduced to any electronic medium without prior written consent from DoorKing, Inc.

TABLE OF CONTENTS

SPECIFICATIONS 1

6002 Specifications 1
ASTM F2200 Standard for Gate Construction 3
Important Safety Instructions 3
Instructions regarding intended installation: 3
Important Notices 4
UL 325 Entrapment Protection 5
Glossary 6
Swing Gate Requirements 7
Swing Gate Protection 8

INSTALLATION 9

Manual Key Release 9
Gate “Opens to the Inside” Installation 10
Gate “Opens to the Outside” Installation 11
Mounting Actuator Arm 12
Mounting Control Box with Conduit 13-14
Install Warning Signs 15
In-Ground Loops 15
Photo Sensor Positions “Opens to the Inside” 16
Accessory Items 17
6002 Primary/Secondary 4302 Circuit Board Connection 18

ASTM F2200 Standard for Gate Construction

Vehicular gates should be constructed and installed in accordance with ASTM F2200; Standard Specification for Automated Vehicular Gate Construction. For a copy of this standard, contact ASTM directly at 610-832-9585; service@astm.org; or www.astm.org.

Important Safety Instructions

WARNING - To reduce the risk of injury or death:

1. READ AND FOLLOW ALL INSTRUCTIONS.
2. Never let children operate or play with gate controls. Keep the remote control away from children.
3. Always keep people and objects away from gate. **NO ONE SHOULD CROSS THE PATH OF THE MOVING GATE.**
4. Test the operator monthly. The gate MUST reverse on contact with a rigid object or stop or reverse when an object activates the non-contact sensors. After adjusting the force or the limit of travel, retest the gate operator. Failure to adjust and retest the gate operator properly can increase the risk of injury or death.
5. Use the emergency release only when the gate is not moving.
6. KEEP GATES PROPERLY MAINTAINED. Read the owner's manual. Have a qualified service person make repairs to gate hardware.
7. The entrance is for vehicles only. Pedestrians must use separate entrance.
8. **SAVE THESE INSTRUCTIONS!**

Instructions regarding intended installation:

- Install the gate operator only if:
  1. The operator is appropriate for the construction of the gate and the usage class of the gate.
  2. All openings of a horizontal slide gate are guarded or screened from the bottom of the gate to a minimum of 6 feet (1.83 m) above the ground to prevent a 2 ¼ inch (57.2 mm) diameter sphere from passing through the openings anywhere in the gate, and in that portion of the adjacent fence that the gate covers in the open position.
  3. All exposed pinch points are eliminated or guarded.
  4. Guarding is supplied for exposed rollers.
- The operator is intended for installation only on gates used for vehicles. Pedestrians must be supplied with a separate access opening. The pedestrian access opening shall be designed to promote pedestrian usage. Locate the gate such that persons will not come in contact with the vehicular gate during the entire path of travel of the vehicular gate.
- The gate must be installed in a location so that enough clearance is supplied between the gate and adjacent structures when opening and closing to reduce the risk of entrapment. Swinging gates should not open into public access areas.
- The gate must be properly installed and work freely in both directions prior to the installation of the gate operator. Do not over-tighten the operator clutch, pressure relief valve or reduce reversing sensitivity to compensate for a damaged gate.
- For gate operators utilizing Type D protection:
  1. The gate operator controls must be placed so that the user has full view of the gate area when the gate is moving.
  2. A warning placard shall be placed adjacent to the controls.
  3. An automatic closing device (such as a timer, loop sensor, or similar device) shall not be employed.
  4. No other activation device shall be connected.
- Controls intended for user activation must be located at least ten feet (10’) away from any moving part of the gate and where the user is prevented from reaching over, under, around or through the gate to operate the controls. Outdoor or easily accessible controls should have a security feature to prevent unauthorized use.
- The Stop and/or Reset button must be located in the line-of-sight of the gate. Activation of the reset control shall not cause the operator to start.
- A minimum of two (2) WARNING SIGNS shall be installed, one on each side of the gate where easily visible.
- For gate operators utilizing a non-contact sensor:
  1. See the instructions on the placement of non-contact sensors for each type of application.
  2. Care shall be exercised to reduce the risk of nuisance tripping, such as when a vehicle trips the sensor while the gate is still moving in the opening direction.
  3. One or more non-contact sensors shall be located where the risk of entrapment or obstruction exist, such as the perimeter reachable by a moving gate or barrier.

- For gate operators utilizing contact sensors:
  1. One or more contact sensors shall be located where the risk of entrapment or obstruction exist, such as at the leading edge, trailing edge, and post mounted both inside and outside of a vehicular horizontal slide gate.
  2. One or more contact sensors shall be located at the bottom edge of a vehicular vertical lift gate.
  3. One or more contact sensors shall be located at the pinch point of a vehicular vertical pivot gate.
  4. A hardwired contact sensor shall be located and its wiring arranged so that the communication between the sensor and the gate operator is not subjected to mechanical damage.
  5. A wireless contact sensor such as one that transmits radio frequency (RF) signals to the gate operator for entrapment protection functions shall be located where the transmission of the signals are not obstructed or impeded by building structures, natural landscaping or similar obstructions. A wireless contact sensor shall function under the intended end-use conditions.
  6. One or more contact sensors shall be located at the bottom edge of a vertical barrier (arm).

Important Notices

Vehicular gate operator products provide convenience and security. However, gate operators must use high levels of force to move gates and most people underestimate the power of these systems and do not realize the potential hazards associated with an incorrectly designed or installed system. These hazards may include:

- Pinch points
- Entrapment areas
- Reach through hazards
- Absence of entrapment protection devices
- Improperly located access controls
- Absence of vehicle protection devices
- Absence of controlled pedestrian access

In addition to these potential hazards, automated vehicular gate systems must be installed in accordance with the UL 325 Safety Standard and the ASTM F2200 Construction Standard. Most lay persons are unaware of, or are not familiar with, these standards. If an automated vehicular gate system is not properly designed, installed, used and maintained, serious injuries or death can result. Be sure that the installer has instructed you on the proper operation of the gate and gate operator system.

Be sure that the installer has trained you about the basic functions of the required reversing systems associated with your gate operating system and how to test them. These include reversing loops, inherent reversing system, electric edges, photoelectric cells, or other external devices.

- This Owner's Manual is your property. Keep it in a safe place for future reference.
- Be sure that all access control devices are installed a minimum distance of 10 feet away from the gate and gate operator, or in such a way that a person cannot touch the gate or gate operator while using the device. If access control devices are installed in violation of these restrictions, immediately remove the gate operator from service and contact your installing dealer.
- Loops and loop detectors, photo-cells or other equivalent devices must be installed to prevent the gate from closing on vehicular traffic.
- The speed limit for vehicular traffic through the gate area is 5 MPH. Install speed bumps and signs to keep vehicular traffic from speeding through the gate area. Failure to adhere to posted speed limits can result in damage to the gate, gate operator, and to the vehicle.
- Be sure that all persons who will use the gate system are familiar with the proper use of the gate and gate operator and are familiar with the possible hazards associated with the gate system.
- Be sure that warning signs are permanently installed on both sides of the gate in an area where they are fully visible to traffic.
- It is your responsibility to periodically check all entrapment protection devices. If any of these devices are observed to function improperly, remove the operator from service immediately and contact your installing or servicing dealer.
- Follow the recommended maintenance schedule.
- Do not allow children to play in the area of the operator or to play with any gate-operating device.
- To remove the gate operator from service, operate the gate to the full open position and then shut off power to the operator at the service panel.

UL 325 Entrapment Protection

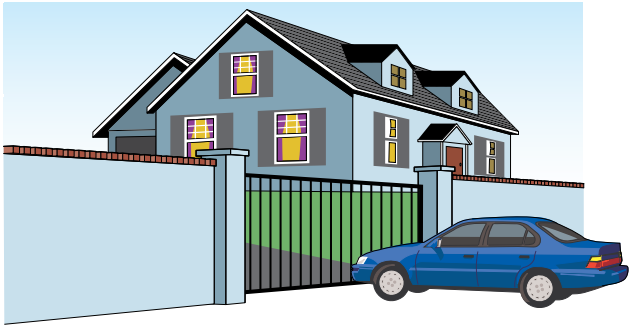

Class I

A vehicular gate operator (or system) intended for use in a home of one-to four single family dwelling, or a garage or parking area associated therewith.

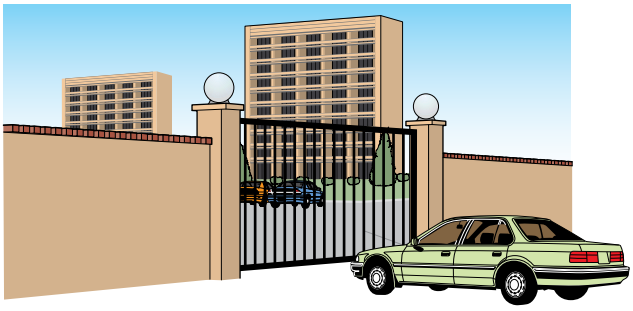

Class II

A vehicular gate operator (or system) intended for use in a commercial location or building such as a multi-family housing unit (five or more single family units) hotel, garages, retail store or other building servicing the general public.

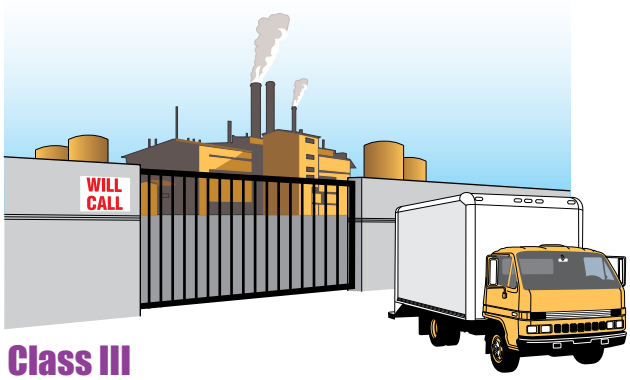

Class III

A vehicular gate operator (or system) intended for use in a industrial location or building such as a factory or loading dock area or other locations not intended to service the general public.

Class IV

A vehicular gate operator (or system) intended for use in a guarded industrial location or building such as an airport security area or other restricted access locations not servicing the general public, in which unauthorized access is prevented via supervision by security personnel.

This table illustrates the entrapment protection requirements for each of the four UL 325 classes.

UL 325 Classifications	Horizontal Slide, Vertical Lift, Vertical Pivot		Swing and Vertical Barrier (arm)	
	Primary Protection	Secondary Protection	**Primary Protection**	Secondary Protection
Class I and II	**A**	B1, B2 or D	**A or C**	A, B1, B2, C or D
Class III	**A, B1 or B2**	A, B1, B2, D or E	**A, B1, B2 or C**	A, B1, B2, C or D
Class IV	**A, B1, B2 or D**	A, B1, B2, D or E	**A, B1, B2, C or D**	A, B1, B2, C, D or E

A - Inherent entrapment protection system.
B1 - Provision for connection of, or supplied with, a non-contact sensor (photoelectric sensor or the equivalent). When used as the PRIMARY device, must be monitored.
B2 - Provision for connection of, or supplied with, a contact sensor (edge device or the equivalent). When used as the PRIMARY device, must be monitored.
C - Inherent adjustable clutch or pressure relief device.
D - Provision for connection of, or supplied with, an actuating device requiring continuous pressure to maintain opening or closing motion of the gate.
E - An inherent audio alarm.

Glossary

GATE - A moving barrier such as a swinging, sliding, raising, lowering, or the like, barrier, that is a stand-alone passage barrier or is that portion of a wall or fence system that controls entrance and/or egress by persons or vehicles and completes the perimeter of a defined area.

RESIDENTIAL VEHICULAR GATE OPERATOR – CLASS I - A vehicular gate operator (or system) intended for use in a home of one-to four single family dwelling, or garage or parking area associated therewith.

COMMERCIAL / GENERAL ACCESS VEHICULAR GATE OPERATOR - CLASS II - A vehicular gate operator (or system) intended for use in a commercial location or building such as a multi-family housing unit (five or more single family units), hotels, garages, retail store, or other building servicing the general public.

INDUSTRIAL / LIMITED ACCESS VEHICULAR GATE OPERATOR - CLASS III - A vehicular gate operator (or system) intended for use in an industrial location or building such as a factory or loading dock area or other locations not intended to service the general public.

RESTRICTED ACCESS VEHICULAR GATE OPERATOR - CLASS IV - A vehicular gate operator (or system) intended for use in a guarded industrial location or building such as an airport security area or other restricted access locations not servicing the general public, in which unauthorized access is prevented via supervision by security personnel.

VEHICULAR BARRIER (ARM) OPERATOR (OR SYSTEM) - An operator (or system) that controls a cantilever type device (or system), consisting of a mechanical arm or barrier that moves in a vertical arc, intended for vehicular traffic flow at entrances or exits to areas such as parking garages, lots or toll areas.

VEHICULAR HORIZONTAL SLIDE-GATE OPERATOR (OR SYSTEM) - A vehicular gate operator (or system) that controls a gate which slides in a horizontal direction that is intended for use for vehicular entrance and exit to a drive, parking lot, or the like.

VEHICULAR SWING-GATE OPERATOR (OR SYSTEM) - A vehicular gate operator (or system) that controls a gate which moves in an arc in a horizontal plane that is intended for use for vehicular entrance and exit to a drive, parking lot, or the like.

SYSTEM - In the context of these requirements, a system refers to a group of interacting devices intended to perform a common function.

WIRED CONTROL - A control implemented in a form of fixed physical interconnections between the control, the associated devices, and an operator to perform predetermined functions in response to input signals.

WIRELESS CONTROL - A control implemented in means other than fixed physical interconnections (such as radio waves or infrared beams) between the control, the associated devices, and an operator to perform predetermined functions in response to input signals.

INHERENT ENTRAPMENT PROTECTION SYSTEM - A system, examples being a motor current or speed sensing system, which provides protection against entrapment upon sensing an object and is incorporated as a permanent and integral part of the operator.

EXTERNAL ENTRAPMENT PROTECTION DEVICE - A device, examples being an edge sensor, a photoelectric sensor, or similar entrapment protection device, which provides protection against entrapment when activated and is not incorporated as a permanent part of an operator.

ENTRAPMENT - The condition when an object is caught or held in a position that increases the risk of injury.

Swing Gate Requirements

The operator is intended for installation only on gates used for vehicles. Pedestrians must be supplied with a separate access opening. The pedestrian access opening shall be designed to promote pedestrian usage. Locate the gate such that persons will not come in contact with the vehicular gate during the entire path of travel of the vehicular gate. (ref. UL325 56.8.4.b)

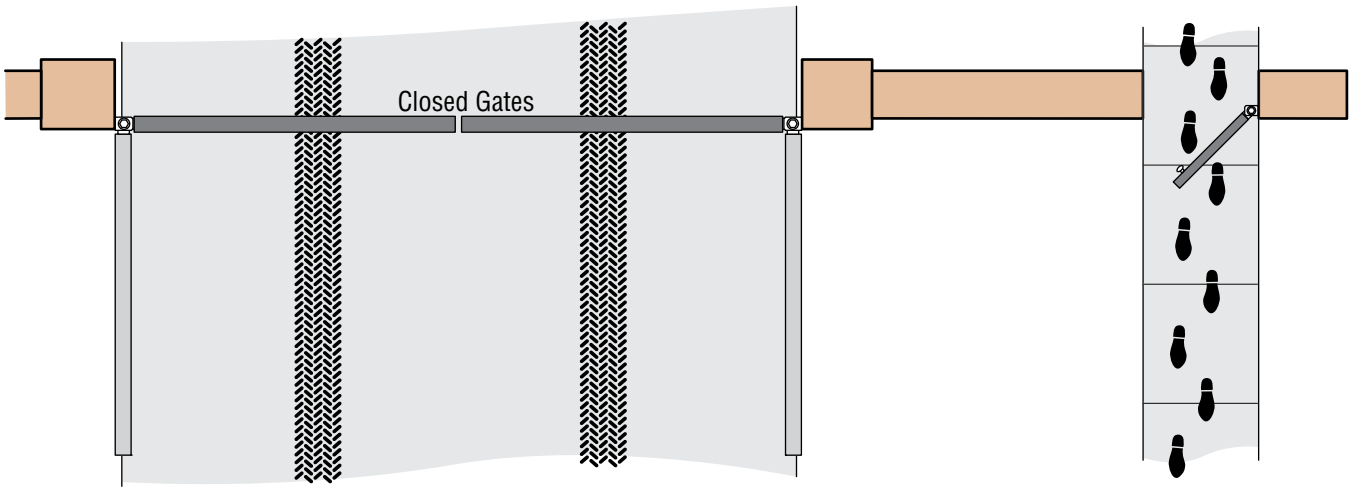

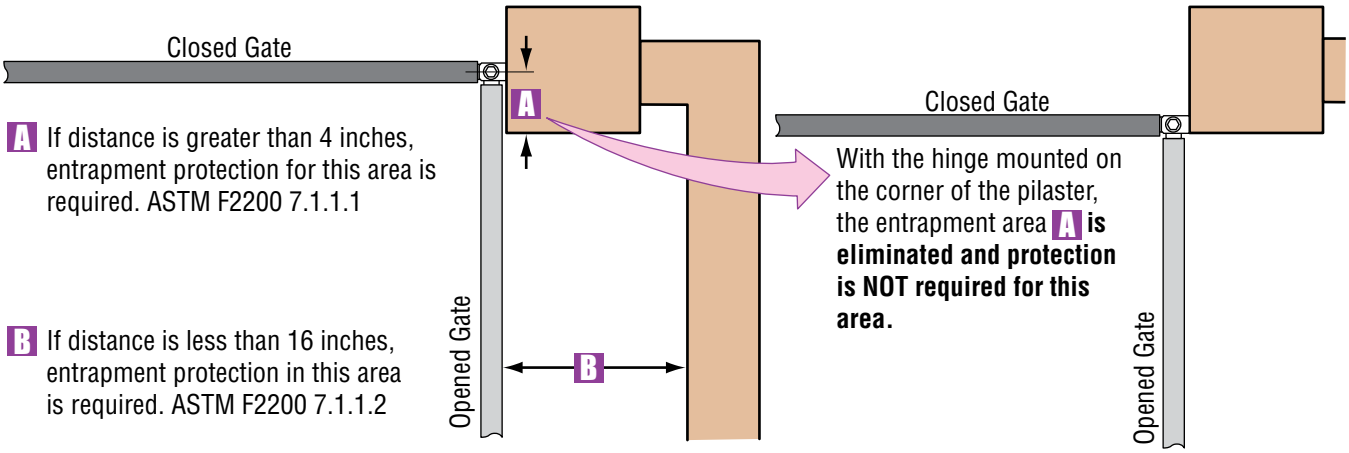

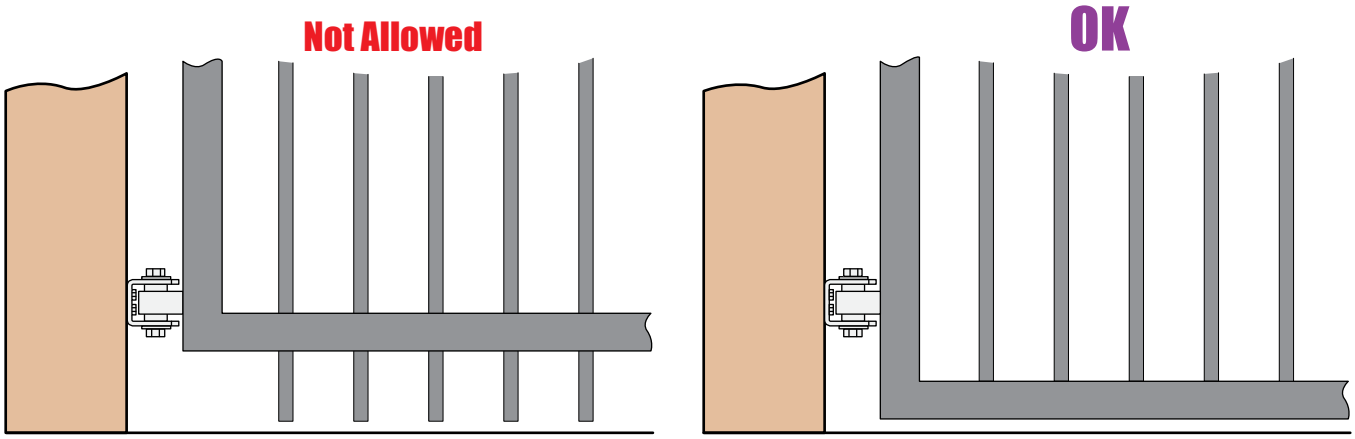

Gates shall have smooth bottom edges, with vertical bottom edged protrusions not exceeding 0.50 inches. ASTM F2200 4.3

Swing Gate Protection

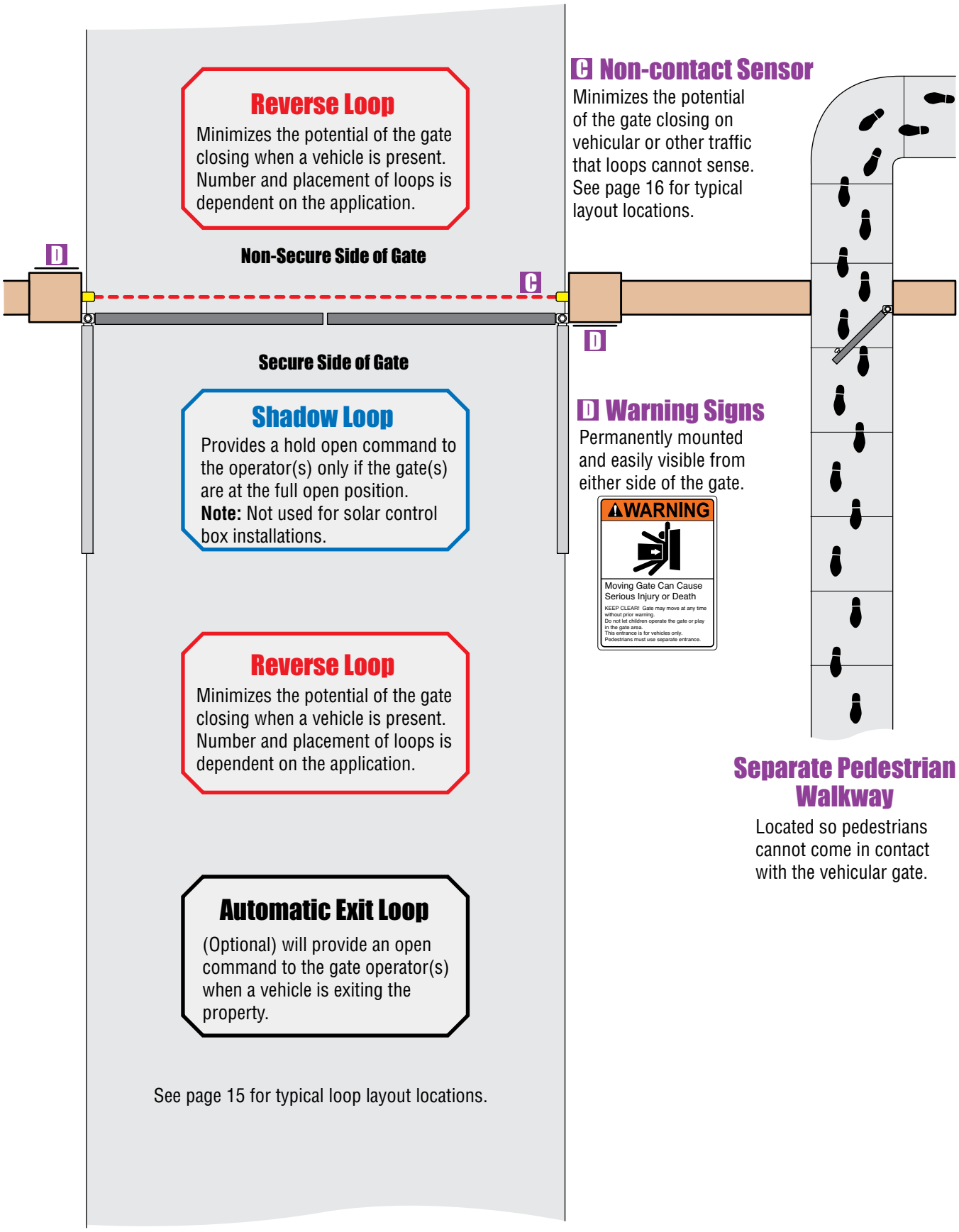

INSTALLATION

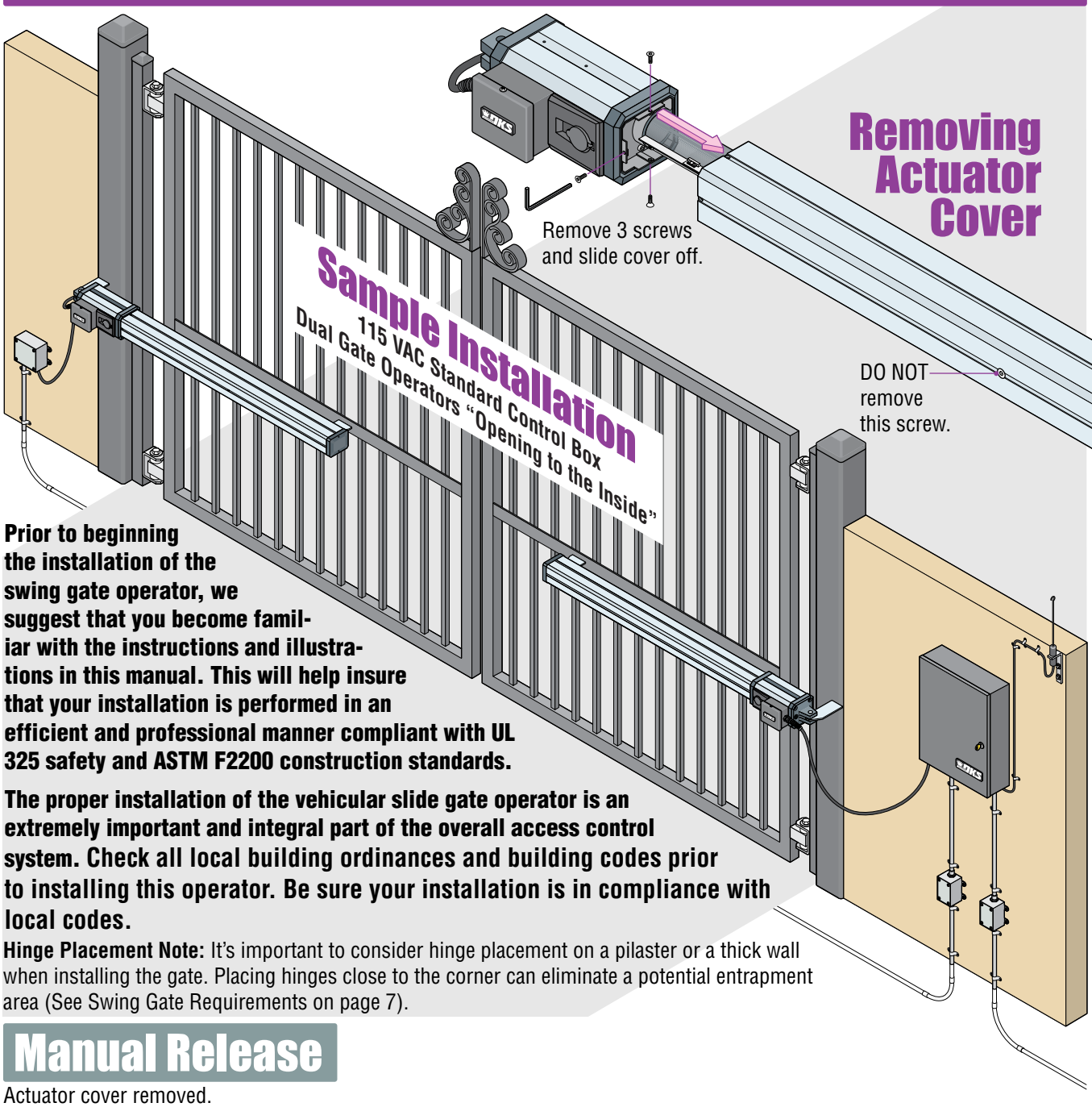

Prior to beginning the installation of the swing gate operator, we suggest that you become familiar with the instructions and illustrations in this manual. This will help insure that your installation is performed in an efficient and professional manner compliant with UL 325 safety and ASTM F2200 construction standards.

The proper installation of the vehicular slide gate operator is an extremely important and integral part of the overall access control system. Check all local building ordinances and building codes prior to installing this operator. Be sure your installation is in compliance with local codes.

Hinge Placement Note: It's important to consider hinge placement on a pilaster or a thick wall when installing the gate. Placing hinges close to the corner can eliminate a potential entrapment area (See Swing Gate Requirements on page 7).

Manual Release

Actuator cover removed.

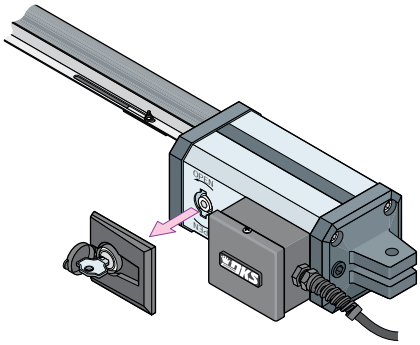

Use key to unlock and remove the cover.

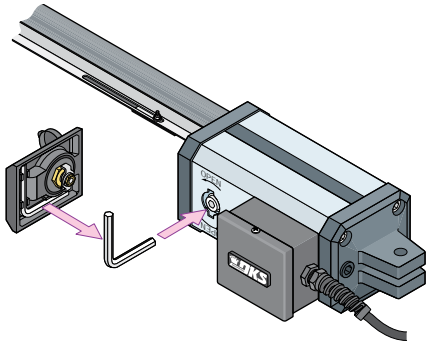

Remove allen wrench from inside of cover.

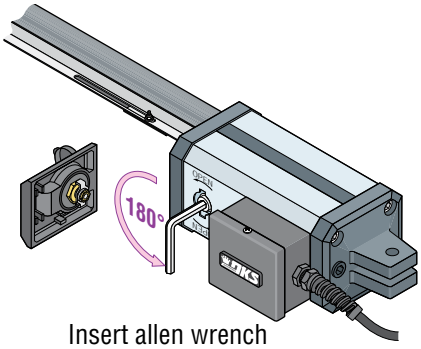

Insert allen wrench and turn 180° to release the arm.

"Opening to the Inside" Installation

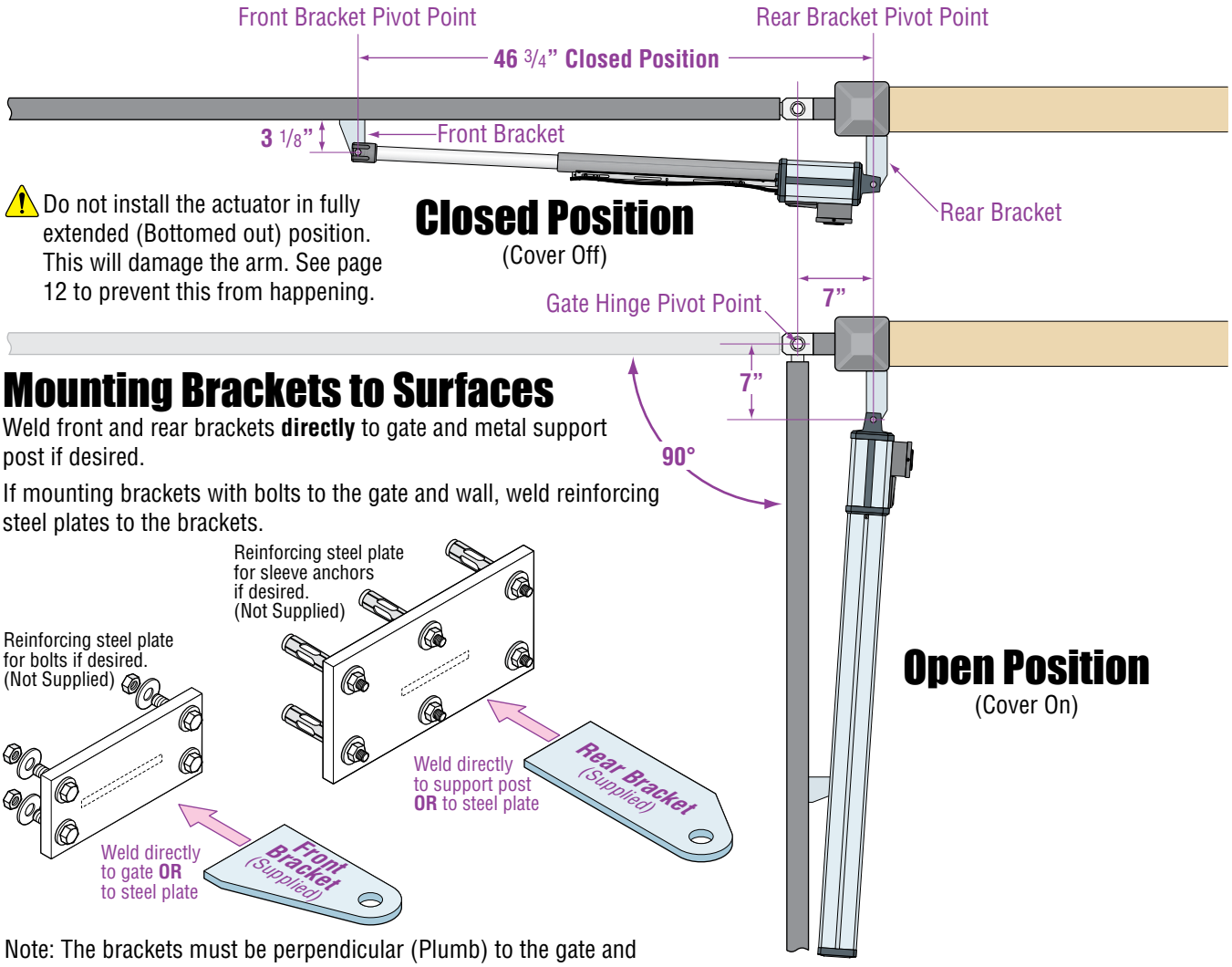

⚠ Do not install the actuator in fully extended (Bottomed out) position. This will damage the arm. See page 12 to prevent this from happening.

Mounting Brackets to Surfaces

Weld front and rear brackets **directly** to gate and metal support post if desired.

If mounting brackets with bolts to the gate and wall, weld reinforcing steel plates to the brackets.

Note: The brackets must be perpendicular (Plumb) to the gate and wall/post and horizontally level. Weld completely around brackets.

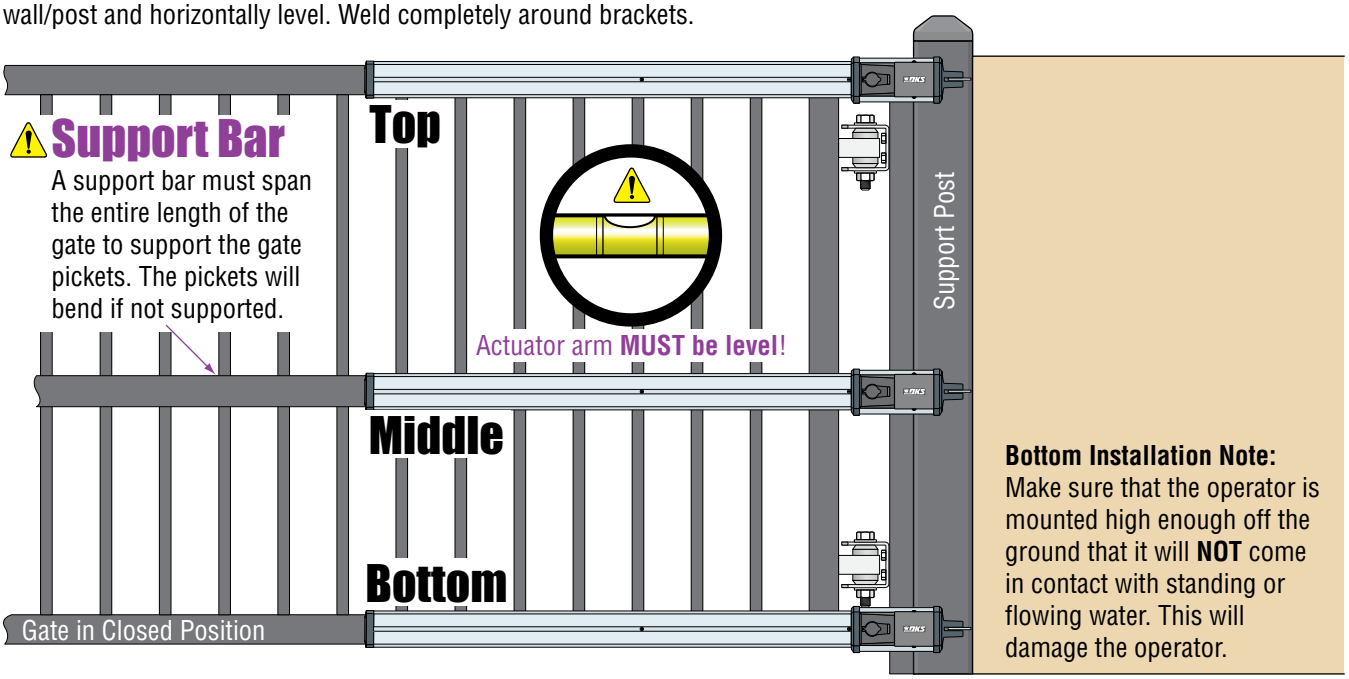

Bottom Installation Note: Make sure that the operator is mounted high enough off the ground that it will **NOT** come in contact with standing or flowing water. This will damage the operator.

"Opening to the Outside" Installation

Mounting Brackets to Surfaces

Weld front bracket and fabricated rear bracket **directly** to gate and metal support post if desired. If mounting brackets with bolts to the gate and wall, weld reinforcing steel plates to the brackets.

Note: The brackets must be perpendicular (Plumb) to the gate and wall/post and horizontally level. Weld completely around brackets.

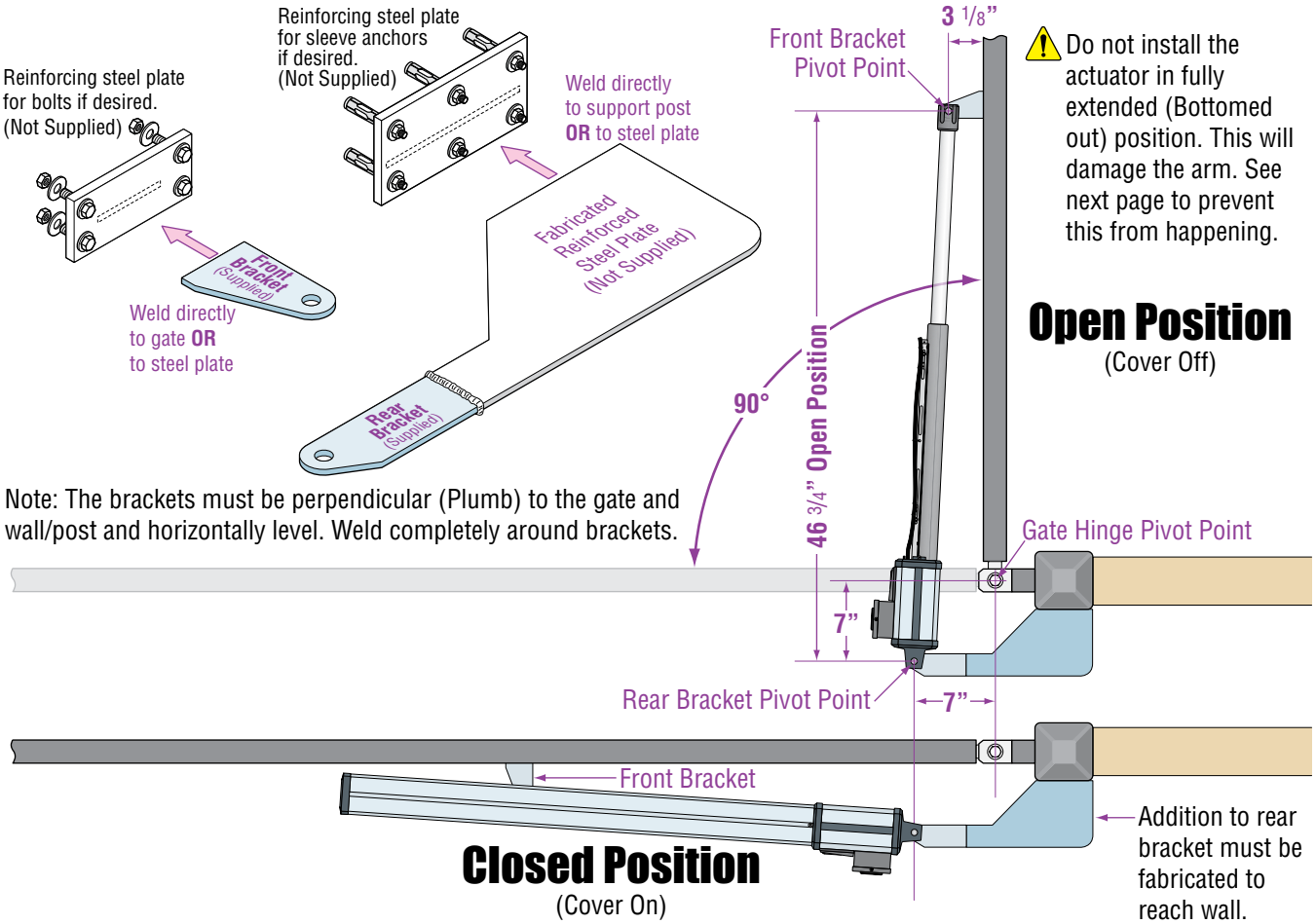

Do not install the actuator in fully extended (Bottomed out) position. This will damage the arm. See next page to prevent this from happening.

Open Position
(Cover Off)

Closed Position
(Cover On)

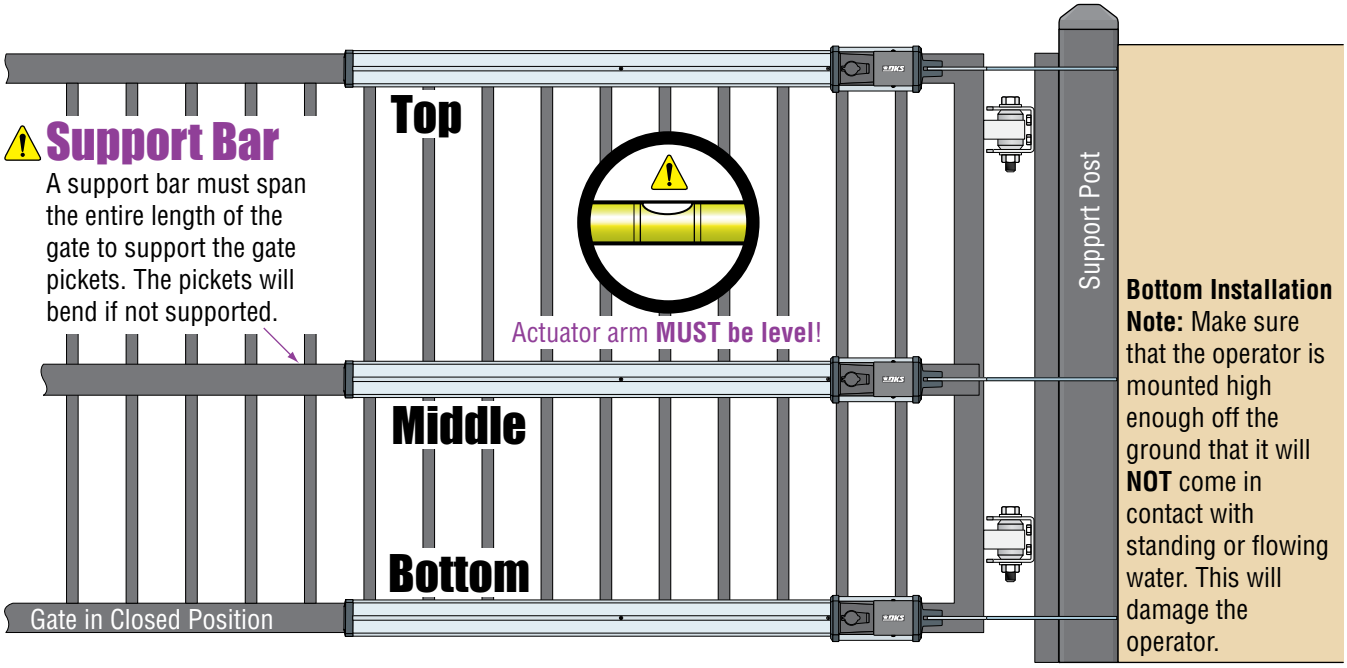

Support Bar

A support bar must span the entire length of the gate to support the gate pickets. The pickets will bend if not supported.

Bottom Installation Note: Make sure that the operator is mounted high enough off the ground that it will **NOT** come in contact with standing or flowing water. This will damage the operator.

Mounting Actuator Arm

Gate must be in good working condition before the actuator arm can be installed. Determine what direction the actuator arm will open the gate "Opening to the Inside" or "Opening to the Outside" (See previous two pages).

Gate Support Bar

A support bar that spans the entire length of the gate must be installed to keep the pickets from bending. **Do not mount the front bracket directly to gate pickets!**

Prevent Powered Shaft from Bottoming Out

It is very important that the powered shaft is not fully extended when installed on the gate (bottoming out). This will damage the arm. To prevent this, manually release the arm and fully extend the powered shaft. Rotate it back two full turns before installing the arm.

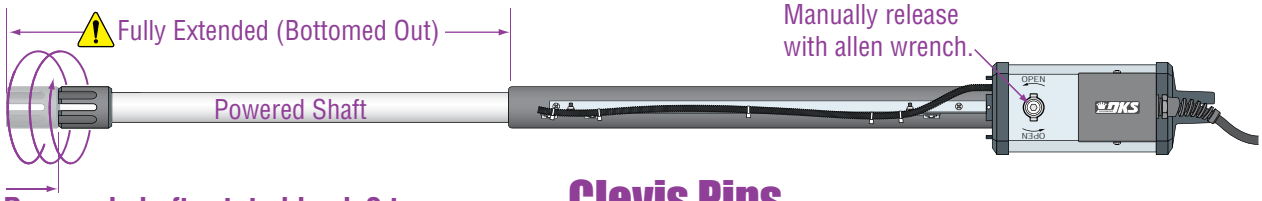

Powered shaft rotated back 2 turns.

Clevis Pins

Note: Front clevis pin **MUST** fit into countersunk hole to allow retaining ring to be installed.

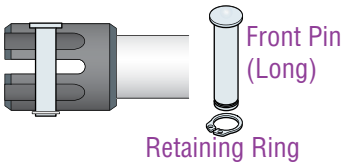

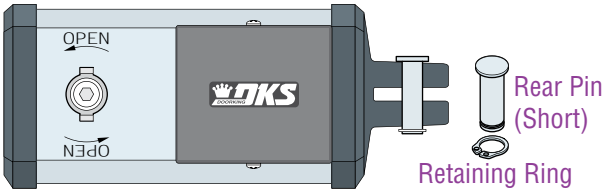

Bracket Fabrication

The brackets need to be fabricated before the arm can be installed. Brackets will vary in size depending on the opening direction of the gate and the thickness of the wall the actuator arm will attach to. They can be attached to the wall and gate by welding and/or mechanically, depending on the type wall and gate. **The brackets must be perpendicular to the wall and/or gate and horizontally level. Make sure the brackets will be VERY secure when fastened to the wall and gate.**

Welding Brackets to Surfaces

If brackets are going to be welded to the gate and/or wall, **only tack weld the brackets with the arm attached. Protect the arm from welding sparks during tack welding. Remove arm before completely welding around the brackets. Make sure the brackets are level when tack welding them!** The arm will not operate properly if not level.

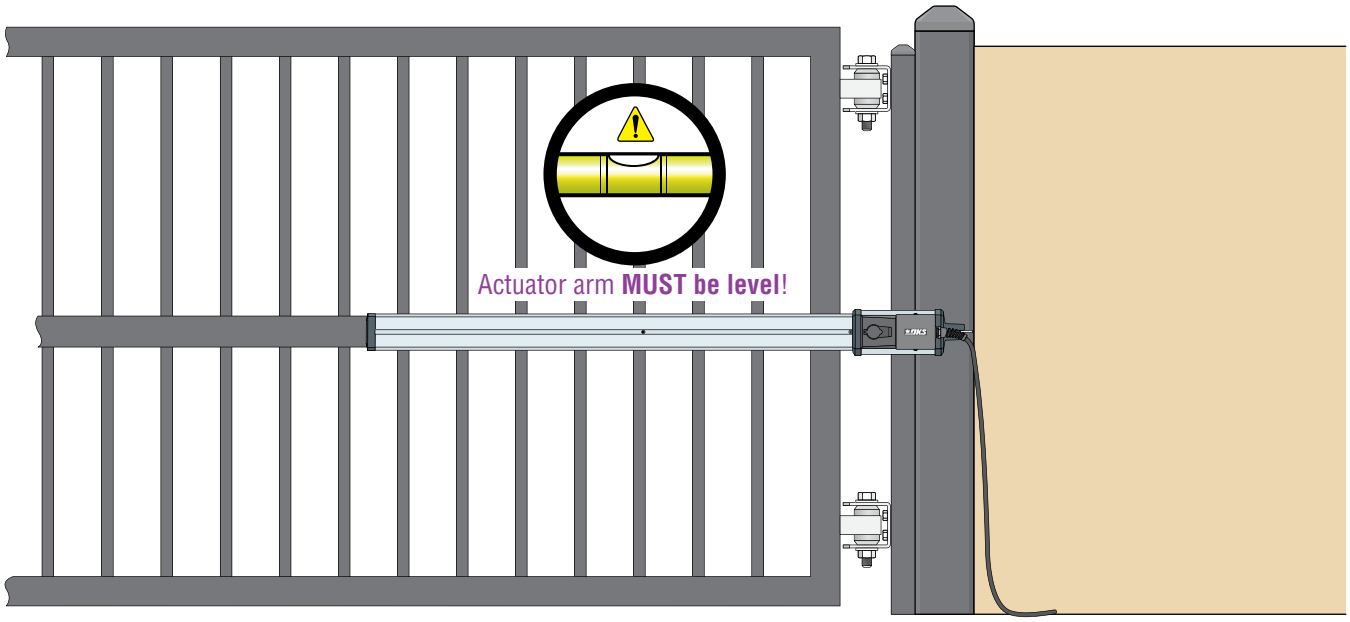

Mounting Control Box with Conduit

Permanent wiring must be installed to the operator as required by local electrical codes (See the 115 VAC control box Wiring/Owner's manual or Solar control box Wiring/Owner's manual to wire operator). It is recommended that a licensed electrical contractor perform this work. Check local building codes prior to installing any permanent wiring to ensure all wiring and connections comply with local electrical code requirements.

Position the desired control box on the wall, **close enough to the operator so the primary actuator cable can be easily routed inside the box.** Make sure that the control box is mounted high enough off the ground that it will **NOT** come in contact with standing or flowing water. **This will damage the internal components**. Secure the control box to the wall with appropriate hardware (not included). Control box has pre drilled mounting holes. All power and control wires should be routed to control box in conduits with sweeps. **Never** run low voltage rated wire insulation in the same conduit as high voltage rated wire insulation.

- 3/4" conduit recommended. Use only sweeps for conduit bends and **NOT** elbow connectors. Elbows will make wire pulls very difficult and can cause damage to wire insulation.
- Remove fragile components from control box to protect them during installation if necessary.

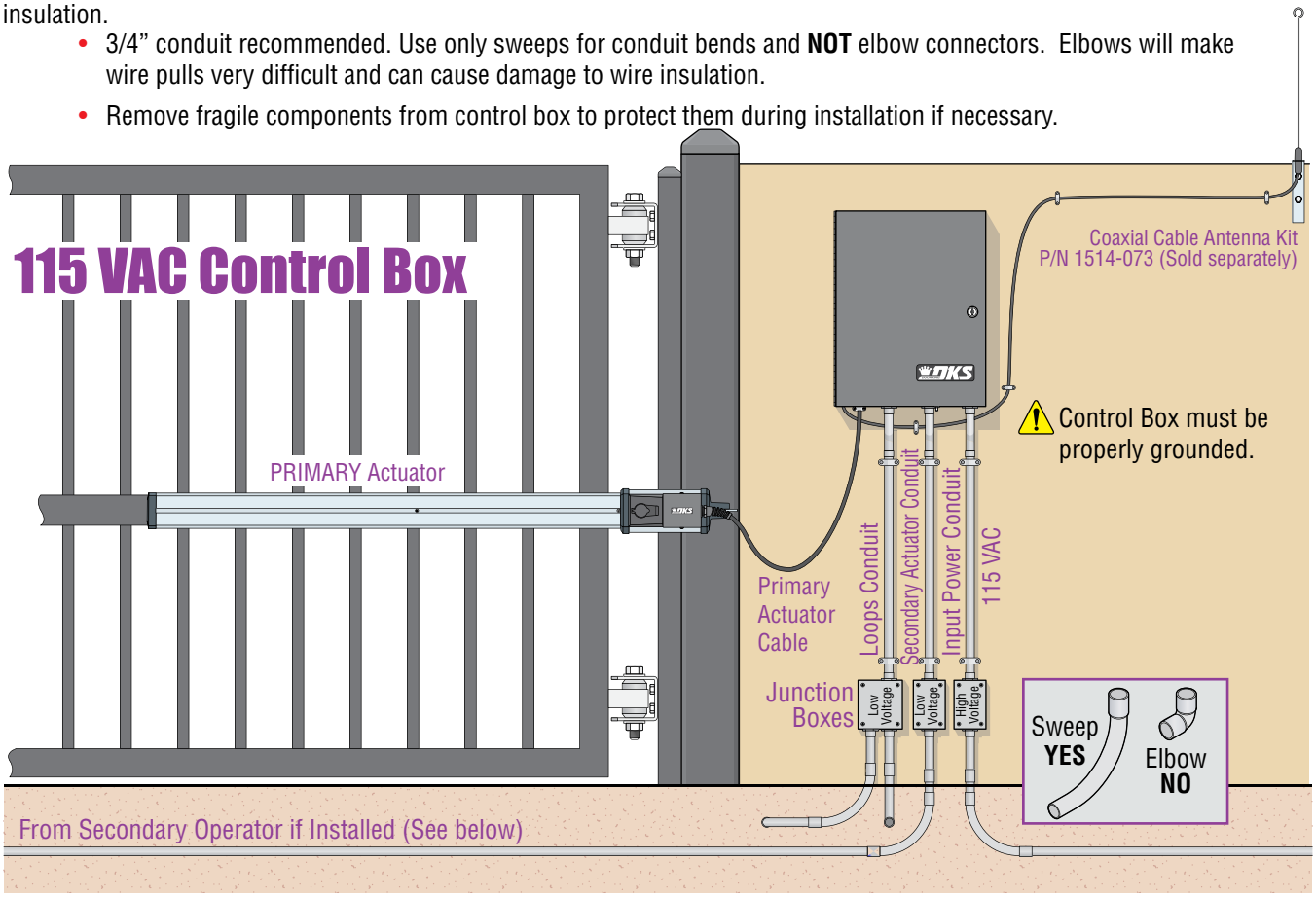

Dual Actuators Connection (115 VAC or Solar)

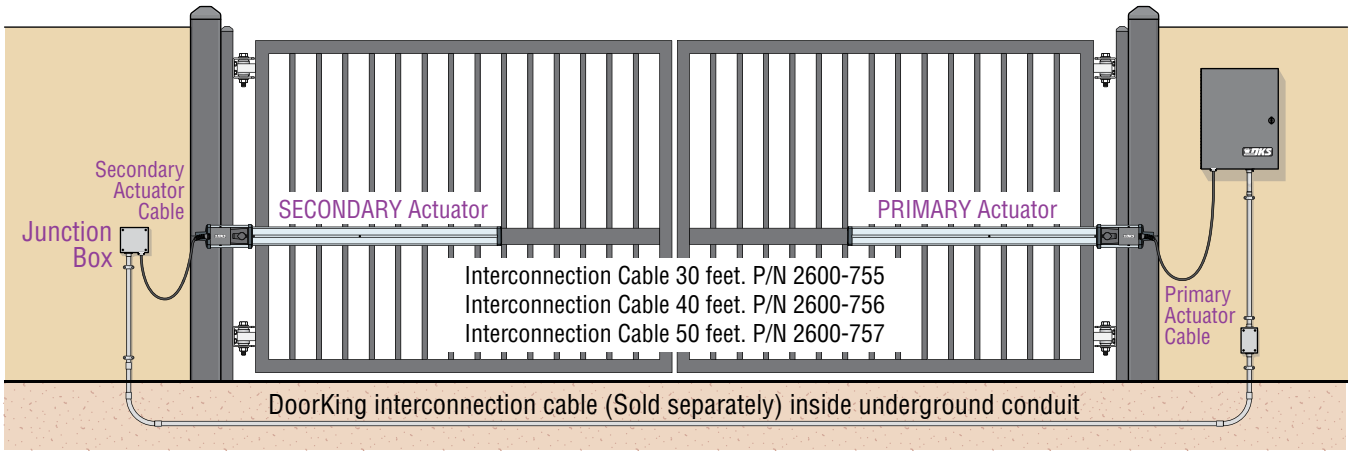

Mounting Control Box Continued

ONLY Mount One 24 Volt Solar Panel!

The 24 volt - 10 watt or 20 watt solar panel must be correctly installed for the system to function correctly. See the solar control box Wiring/Owner's manual for more information about concerns, considerations and recommendations for proper solar panel positioning and mounting.

DO NOT use a 12 volt solar panel. Damage WILL occur!!

- **One** 24 V 10 watt panel required for 18 Amp/Hr batteries. **DO NOT USE** 10 watt panel with the 35 Amp/Hr batteries.
- **One** 24 V 20 watt panel required for 35 Amp/Hr batteries. **DO NOT USE** 20 watt panel with the18 Amp/Hr batteries.

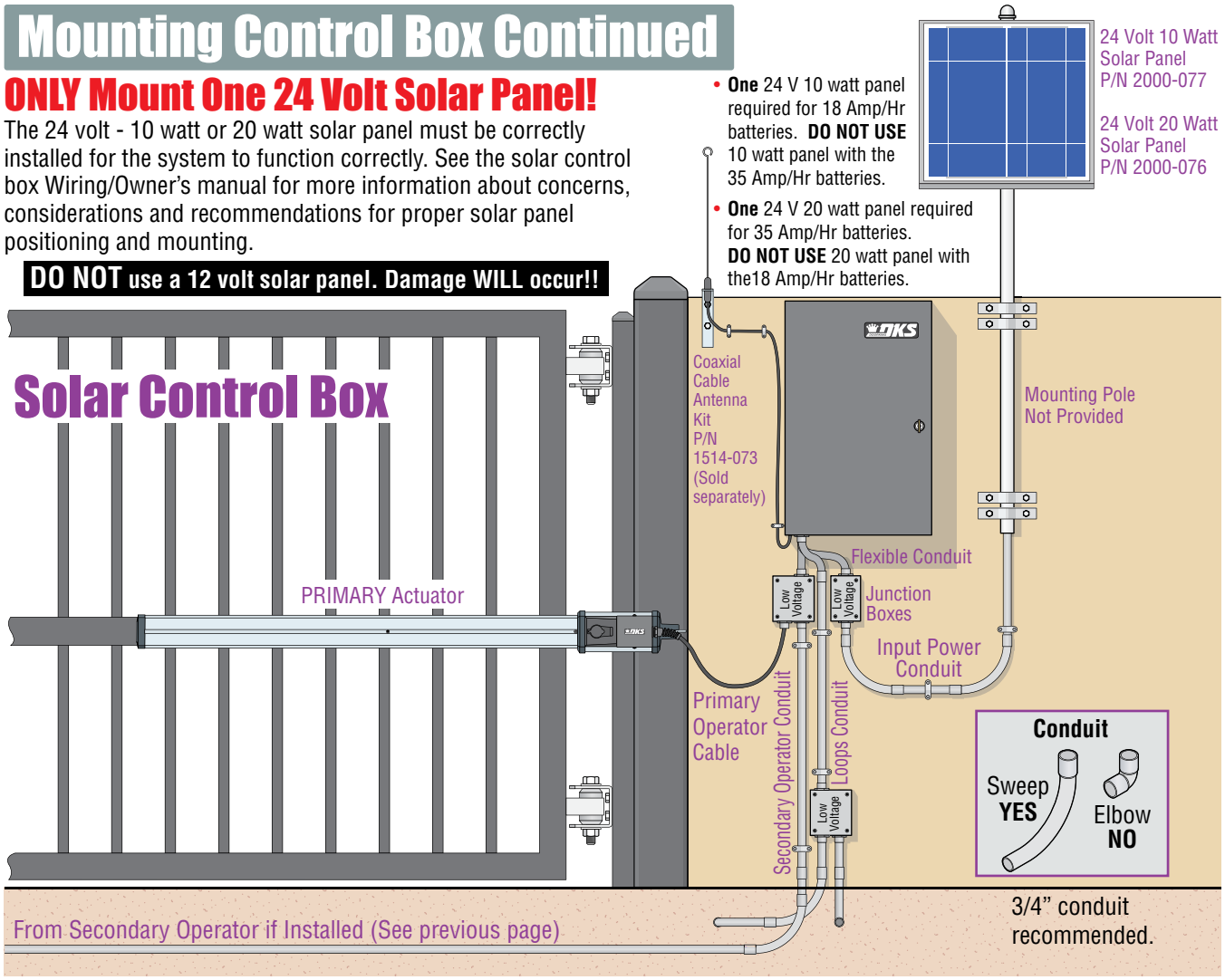

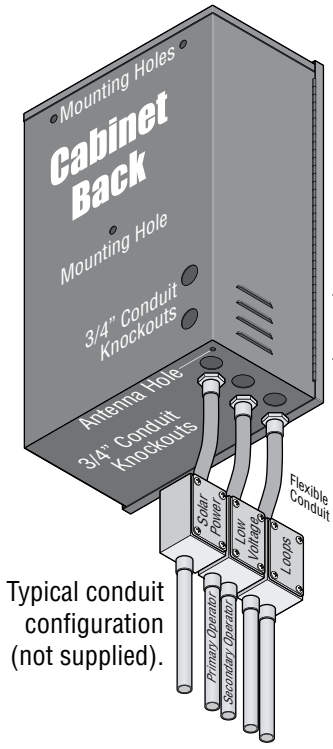

Solar Cabinet Mounting Holes and Conduit Holes

Remove fragile components from control box to protect them during installation if necessary.

Typical conduit configuration (not supplied).

DoorKing offers a mounting post kit (P/N 1000-045) when no vertical surface is available to mount the solar control box cabinet to.

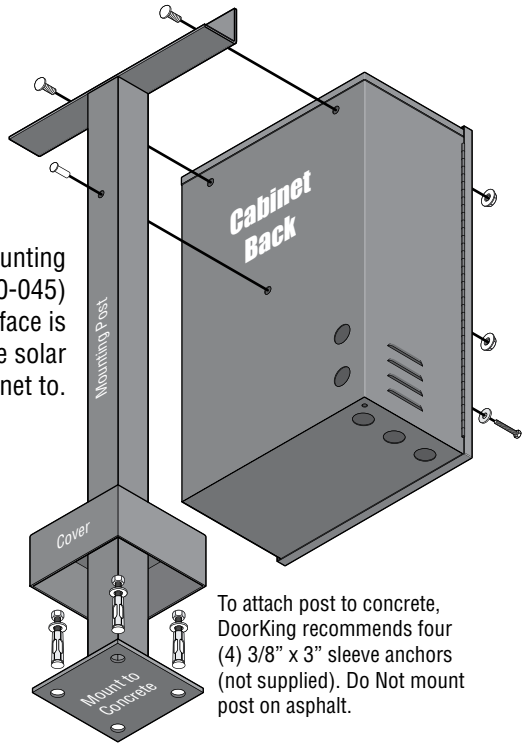

To attach post to concrete, DoorKing recommends four (4) 3/8" x 3" sleeve anchors (not supplied). Do Not mount post on asphalt.

Cover Holes on Top

Cover the exposed holes on top of the actuator with the aluminum tape.

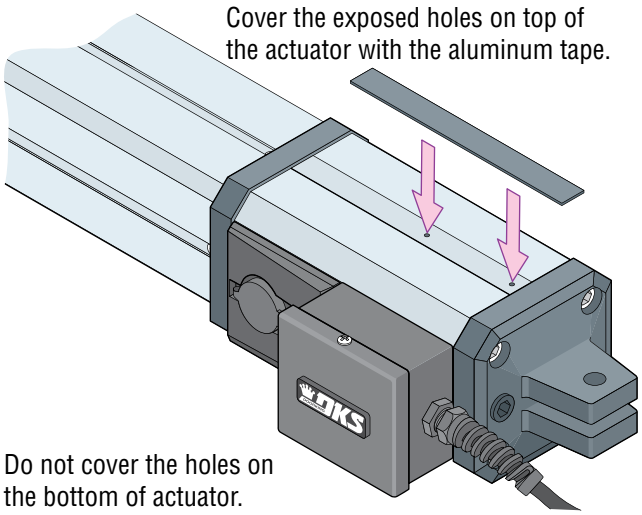

Do not cover the holes on the bottom of actuator.

Install Warning Signs

This DoorKing Swing Gate Operator is shipped with two warning signs. The purpose of the warning sign is to alert uninformed persons, and to remind persons familiar with the gate system, that a possible hazard exists so that appropriate action can be taken to avoid the hazard or to reduce exposure to the hazard. See page 8 for suggested mounting positions of signs.

- **Permanently install the supplied warning signs in locations so that the signs are visible by persons on both sides of the gate.**
- Use appropriate hardware such as wood or sheet metal screws (not supplied) to install the warning signs.

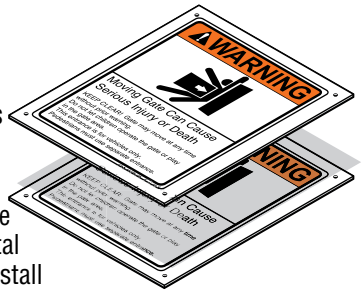

In-Ground Loops

To help protect the operator from accidentally closing on vehicles in the gate's path, DoorKing highly recommends that loops and loop detectors be installed. Loops are laid underneath, cut into asphalt or concrete driveways or buried beneath gravel and earth driveways. A loop detection system will sense a vehicle like a metal detector and send a signal to the gate operator preventing the gate from automatically opening or closing on a vehicle when it is in the gate's path. DoorKing recommends that a licensed installer perform this work.

DoorKing offers a free "**Loop and Loop-Detectors Information Manual**" PDF located at Doorking's web site for more information. www.dkaccess.com

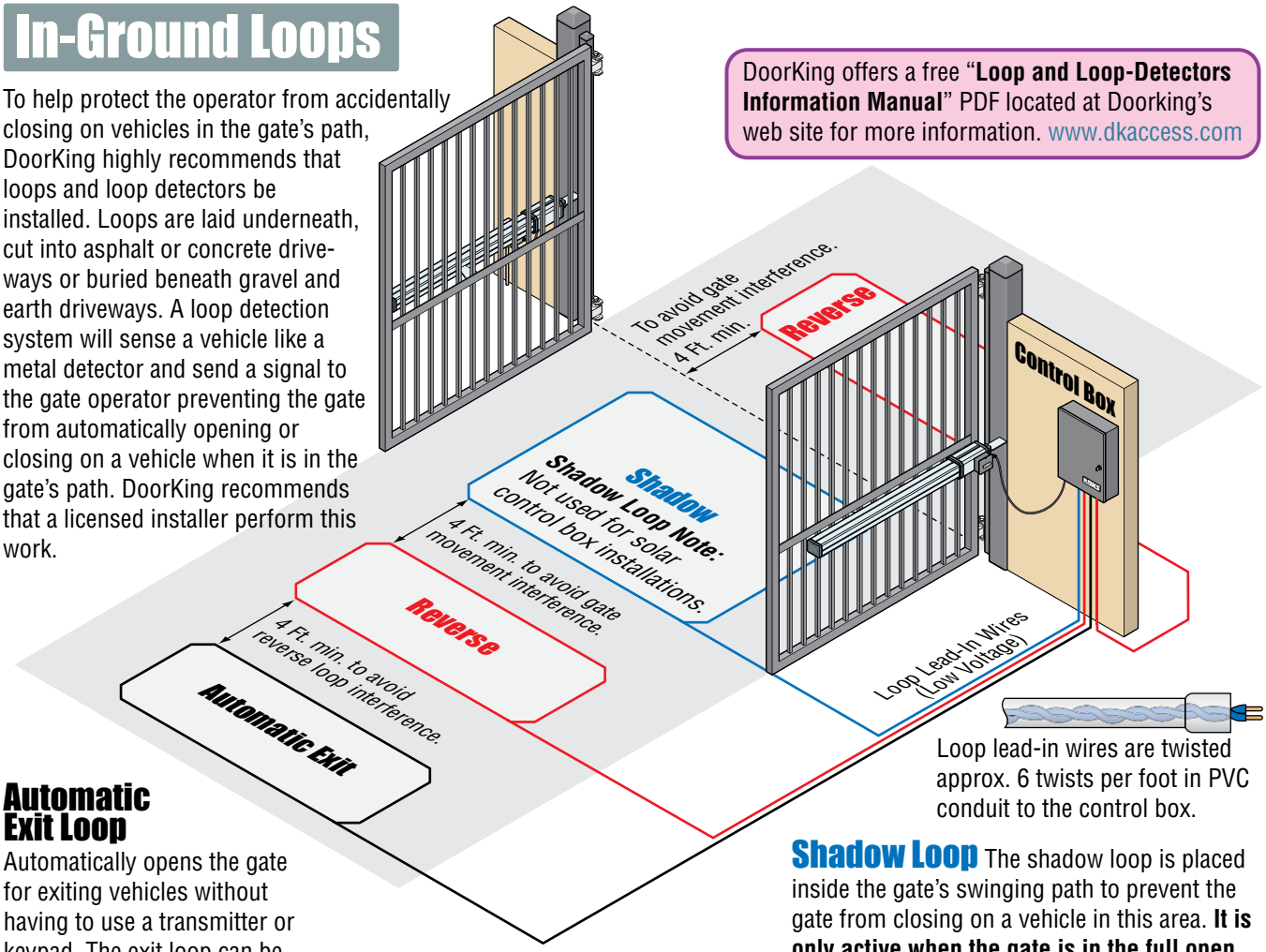

Loop lead-in wires are twisted approx. 6 twists per foot in PVC conduit to the control box.

Automatic Exit Loop

Automatically opens the gate for exiting vehicles without having to use a transmitter or keypad. The exit loop can be placed a minimum of 4 feet away from the reverse loop or far enough away from the gate so the gate has started or completely opened by the time you drive up to it (Free exit).

Reverse Loops

Reverse loops are placed just outside the gate's swinging path to prevent the gate from closing on a vehicle in these areas. They will reverse the cycling of the gate while a vehicle is in or near the gate's swing pathway.

Shadow Loop The shadow loop is placed inside the gate's swinging path to prevent the gate from closing on a vehicle in this area. **It is only active when the gate is in the full open position.** Vehicles in the shadow area will activate it. It will not allow the gate to close unless this area is clear. After a closing cycle begins, the shadow loop **will not** reverse the gate. Reverse loops work in conjunction with the shadow loop and both should be used.

Photo Sensor Positions "Opening to the Inside"

Secondary Entrapment Protection Device:

In addition to the inherent reversing sensor system, the Model 6002 has a 6-pin UL 325 terminal for the connection of **photo sensors**-Type B1 secondary entrapment protection device required by UL 325 standards (see 115 VAC or Solar control box wiring manual). Entrapment protection devices **must be installed** to reduce the risk of injury. Install these devices where the risk of entrapment or a hazard exists while the gate is moving. Specific installations will vary.

Closing-Direction

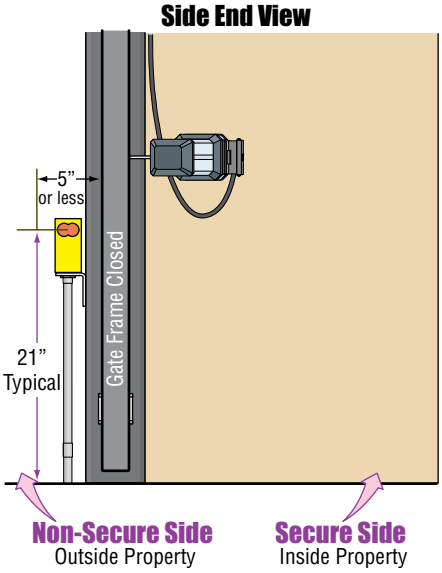

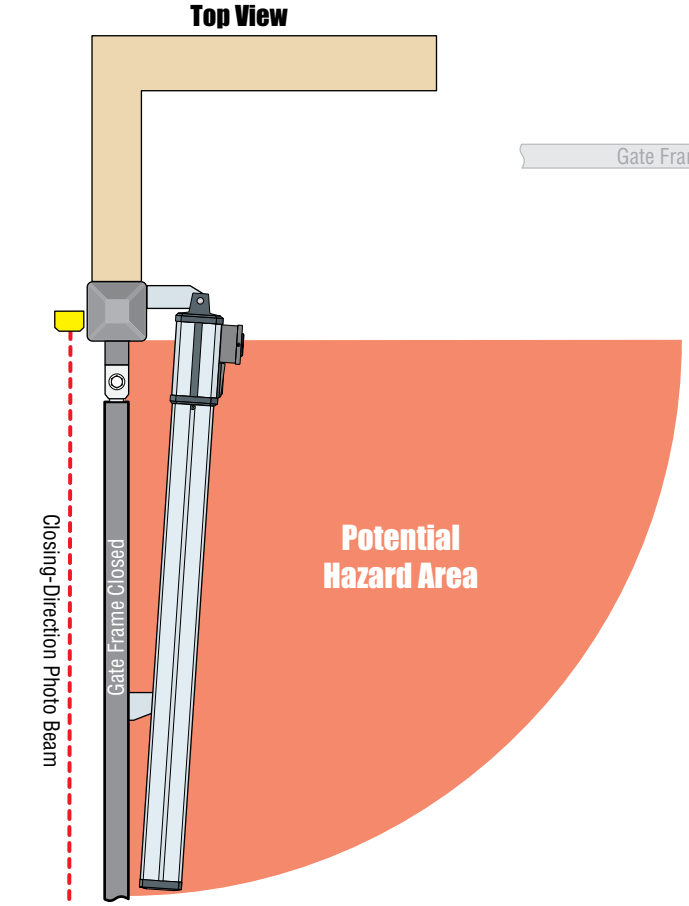

Opening-Direction

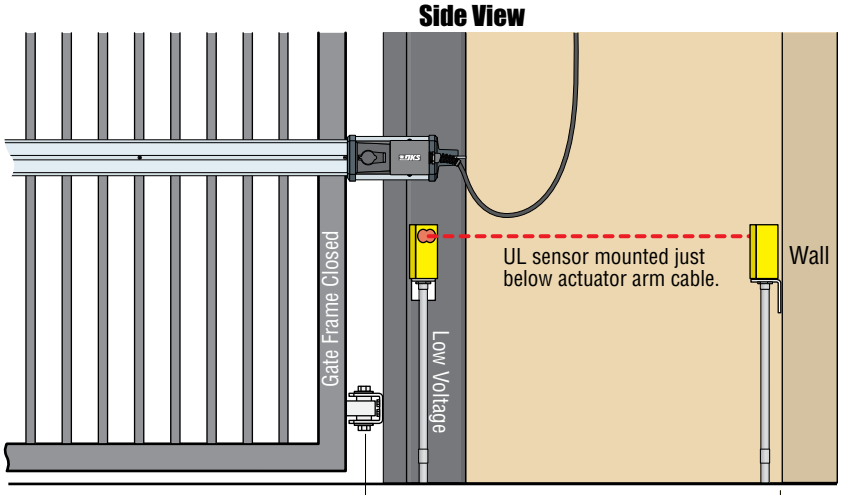

If this space is less than 16 inches, secondary entrapment protection is required in this area.

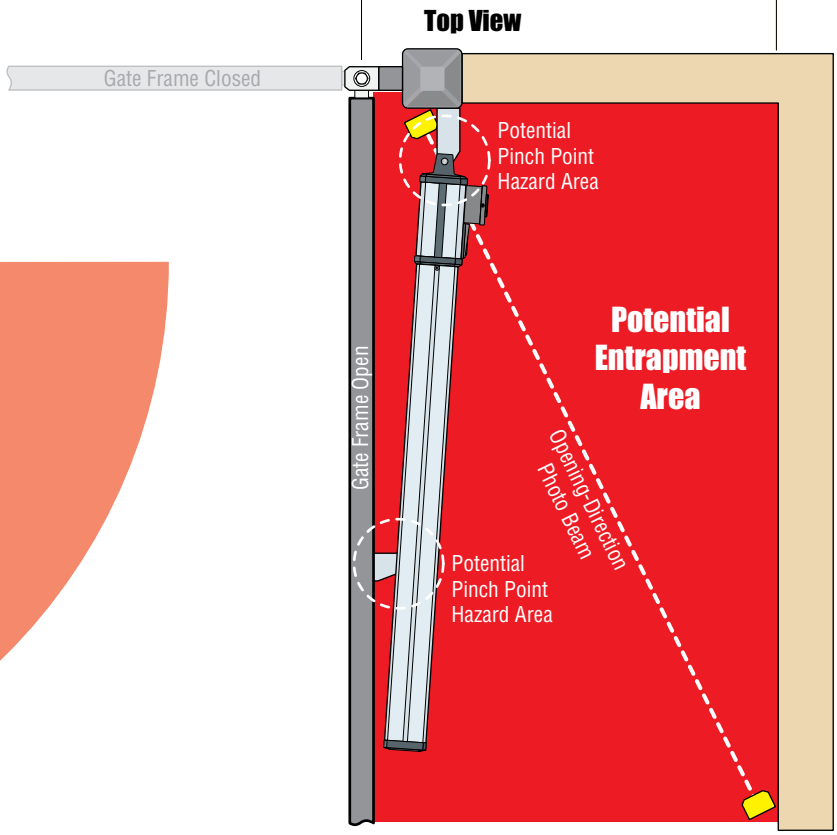

Accessory Items

The following accessory items are available for the model 6002 swing gate operator.

Control Box Types - Fully controls actuator arm(s) with built-in battery back-up system.
P/N 4302-111 - 115 VAC Standard Control Box, 115 VAC 60 Hz Input to box, 24 VDC output to gate operator.
P/N 4302-112 - 115 VAC Deluxe Control Box, 115 VAC 60 Hz Input to box, 24 VDC output to gate operator. 3-115 VAC convenience outlets.
P/N 4302-114 - 18 ah Solar Control Box, 24 VDC 20 Watt Input to box, 24 VDC output to gate operator. 2 - 12 Volt 18 Amp Hr batteries.
P/N 2000-075 - One (1) 24 volt 10 watt solar panel required for 18 ah solar control box.
P/N 4302-115 - 35 ah Solar Control Box, 24 VDC 20 Watt Input to box, 24 VDC output to gate operator. 2 - 12 Volt 35 Amp Hr batteries.
P/N 2000-075 - Two (2) 24 volt 10 watt solar panels required for 35 ah solar control box.

Photo Sensor - Non-contact sensors (photo-cells) sensors for use as a secondary entrapment protection device.
EMX Industries, Inc. Model IRB-325
MMTC, Inc. Model E3K-R10K4-NR

Loop Hardware - DoorKing offers a complete line of loop components to complete your gate operator system.
See DoorKing's web site - www.doorking.com
See the free manual "Loop and Loop-Detectors Information" PDF located at Doorking's technical web site - www.dkaccess.com

Magnetic Lock - Magnetic Gate Lock Kit provides an excellent means to secure swing gates and is a fail-safe device allowing emergency vehicle access upon power outage.
P/N 1216-080 and P/N 1216-081

Interconnection Cable - Interconnect wire cable contains all the necessary wires to interconnect primary / secondary operators.
Cable length 30 feet. P/N 2600-755 Cable length 40 feet. P/N 2600-756 Cable length 50 feet. P/N 2600-757

Time Clock - 7 day and 365 day time clocks can be used to automatically open gate at pre-set time and days. Compact clock fits inside the control box.
P/N 2600-791 - 7 day clock
P/N 2600-795 - 365 day clock

Hinges - Heavy-duty ball bearing hinges provide easy swing gate operation.
P/N 1200-009 (Flange) , P/N 1200-019, P/N 1200-039. Two (2) required.

Gate Scale - Use to test torque required to move gate. P/N 2600-225

Speed Bumps - Prefabricated six-foot speed bump reduces traffic speed through gate system. P/N 1610-150

6002 Primary/Secondary 4302 Circuit Board Connection

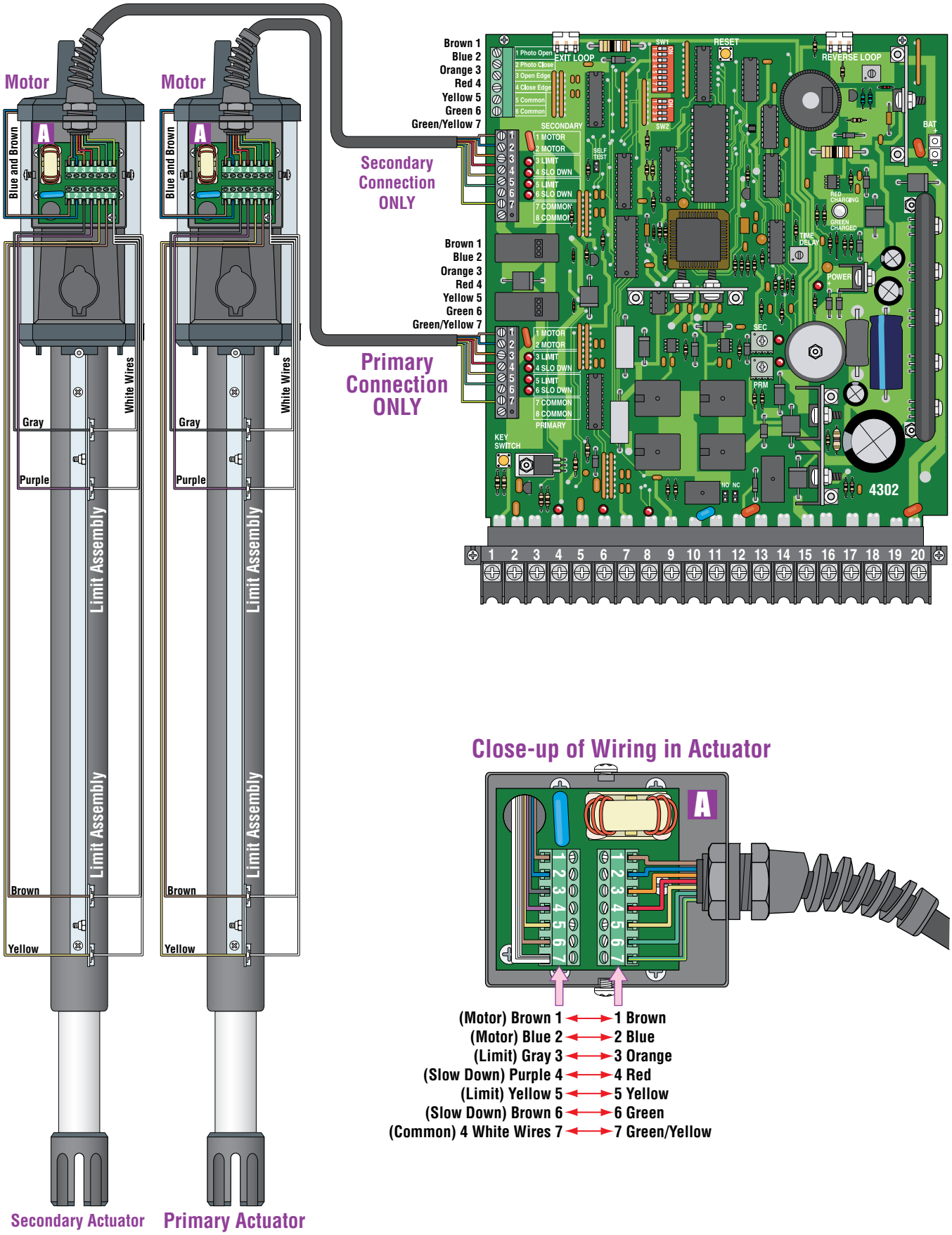

Close-up of Wiring in Actuator

(Motor) Brown 1 ⟷ 1 Brown
(Motor) Blue 2 ⟷ 2 Blue
(Limit) Gray 3 ⟷ 3 Orange
(Slow Down) Purple 4 ⟷ 4 Red
(Limit) Yellow 5 ⟷ 5 Yellow
(Slow Down) Brown 6 ⟷ 6 Green
(Common) 4 White Wires 7 ⟷ 7 Green/Yellow

Actuator Arm and Control Box Mounting

6002

Vehicular Swing Gate Operator

To wire this operator and complete the installation, refer to the specific control box "Wiring/Owner's manual".

6002-065-Y-1-13

DOORKING®, INC.

www.doorking.com

DoorKing, Inc.
120 Glasgow Avenue
Inglewood, California 90301
U.S.A.

Phone: 310-645-0023
Fax: 310-641-1586