Use these programming instructions only if the factory defaults in the converter need to be changed

A Windows (Computer) Settings

The following defaults in the **CONVERTER** are factory set. If they are satisfactory to your system, there is no need to change them.

IP Address:	192.168.1.40
Gateway:	192.168.1.1
Port:	1040
Baud:	9600

1 If these defaults are not satisfactory, navigate to **Local Area Connections** in Windows. (Start – Control Panel – Network Connections – Properties)

Highlight **Internet Protocal (TCP/IP)**

Then click **Properties** to show the Internet Protocol (TCP/IP) Properties Window.

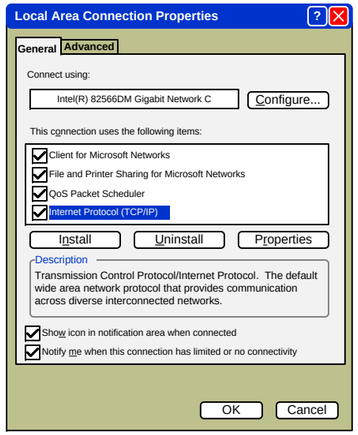

Before proceeding, write down the numbers (or take a screen print) in this window. You are only going to change the IP Address and you will need to put the same IP Address number back when programming of the **CONVERTER** is complete.

2 Ex: write down the numbers:
(these numbers will not be the same in your computer)

IP Address:	10.43.76.171
Subnet mask:	255.255.255.0
Default gateway:	10.43.76.211
Preferred DNS server:	10.43.76.198
Alternate DNS server:	10.43.76.158

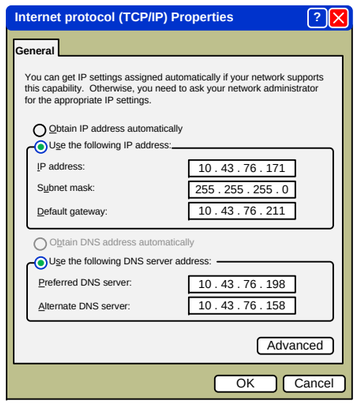

3 Change IP Address to:
192.168.1.5

*(This will allow your PC to connect to the **CONVERTER** so that you can change its settings.)*

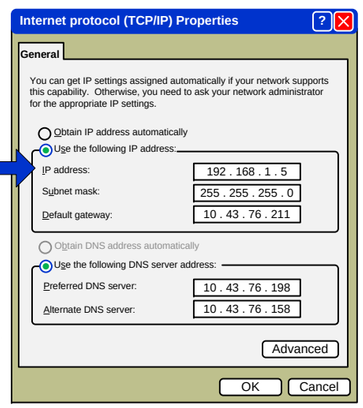

IMPORTANT! When you are finished configuring the **CONVERTER**, you must set the **IP Address** back to the original settings in order to get access back to your network.

B Connect 1830-170 for Programming

1. Unplug the network cable from your PC.
2. Using the **network cable supplied** with the 1830-175 kit, plug one end into your PC and the other into the **CONVERTER**.
3. Power the **CONVERTER** with the supplied power supply.
4. When completed, don't forget to plug the network cable back into the PC and the 1830-170 cable back into the router.

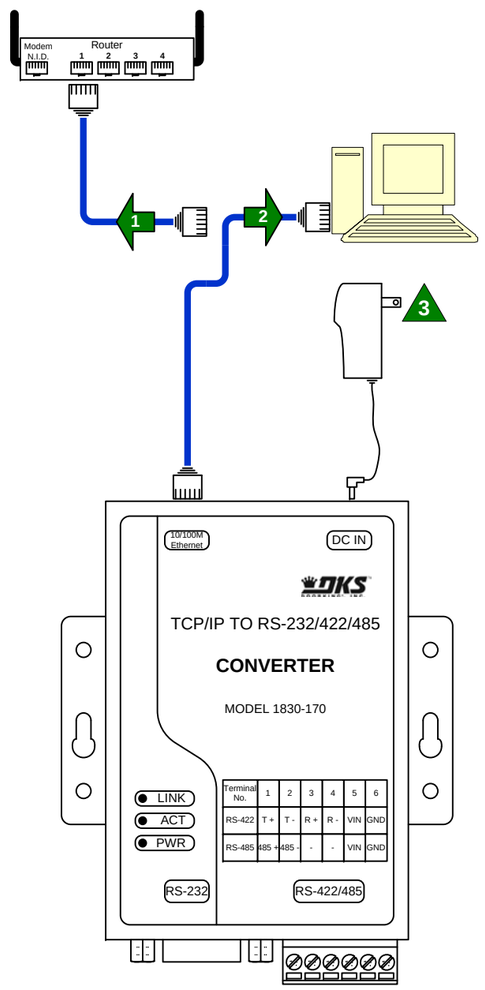

C Accessing the 1830-170 Menus

1. Open any browser and type in the address of the **CONVERTER: http://192.168.1.40**

   The user Log In window for the **CONVERTER** will appear.

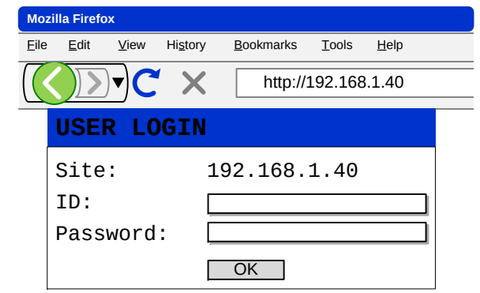

2. Enter the ID and password:
   ID: admin
   Password: system

   The System Status window will appear.

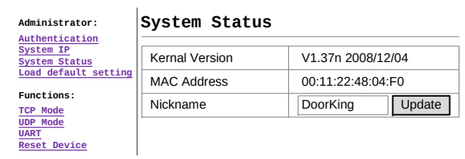

You can access settings of the **CONVERTER** **D** by using the menu at the left.

It is highly recommended that you **DO NOT** change the password on the authentication screen. DoorKing will not be able to assist you if you don't know your ID or password. This system status window is informational and there's no need to change anything here.

D Changing 1830-170 Settings

MODE: Set for RS422.

BAUD RATE: For 1833, 1834, 1835 or 1837 telephone entry system circuit boards REV L and older, and for 1838 card access system circuit boards REV K and older, the only option is 9600 (default).

For 1833, 1834, 1835 or 1837 telephone entry system circuit boards REV M and newer, and for 1838 card access system circuit boards REV L and newer, 19200 baud is an option, but Remote Account Manager Software version 6.2.c is required.

UART Control

Item	Setting
Mode	RS422
Baudrate	9600
Character Bits	8
Parity Type	none
Stop Bit	1
Hardware Flow Control	none
Delimiter	Character 1: 00 Character 2: FF Silent time: 5 (1-255)*200ms Drop Character
	Update

This is where you can change the Port Number if necessary. You should leave the Telnet Server/Client at Server.

TCP Control

Item	Value
Telnet Server/Client	Server Client Disable
Port Number	1040
Remote Server IP Address	210 200 181 102
Client mode inactive timeout	20 minute (1~99, 0=Disable)
Server mode protect timeout	60 minute (1~98, 0=Disable, 99=Can't replace)
	Update

The other settings are not used in Server mode and should be left alone. Changing the Port number will cause you to have to log in with your browser in order to contact the **CONVERTER** again.

The 3 screens below show the defaults which DoorKing has set. If any changes are made, press the UPDATE button for the change to take effect.

NOTE: Changing the IP Address of the CONVERTER on the System IP Configuration screen will cause you to have to change the address you typed into your browser, and perhaps the address you set in your PC in order to Log In and contact the CONVERTER again.

System IP Configuration

Setting	Value
IP Address	192 168 1 40
Subnet Mask	255 255 255 0
Gateway	192 168 1 1
IP Configure	Static DHCP
	Update

You must remember what address you have set in your **CONVERTER** in order to be able to work with the **CONVERTER** in the future.

IMPORTANT! When you are finished configuring the CONVERTER, you must set the Internet Protocol (TCP/IP) Properties screen on your PC back to its original settings in order to get access back to your network.

Follow the instructions **A** **1** to get to the Internet Protocol (TCP/IP) Properties screen and then put your old settings back. **A** **2**

Don't forget to plug the netowrk cable back into the PC **B** **1** and the CONVERTER cable back into the router. **B** **2**

INSTRUCTIONS FOR 1830-176 TCP/IP to RS-422 CONVERTER KIT

DOORKING®, INC.

Connection via **DKS Server Internet or Network**

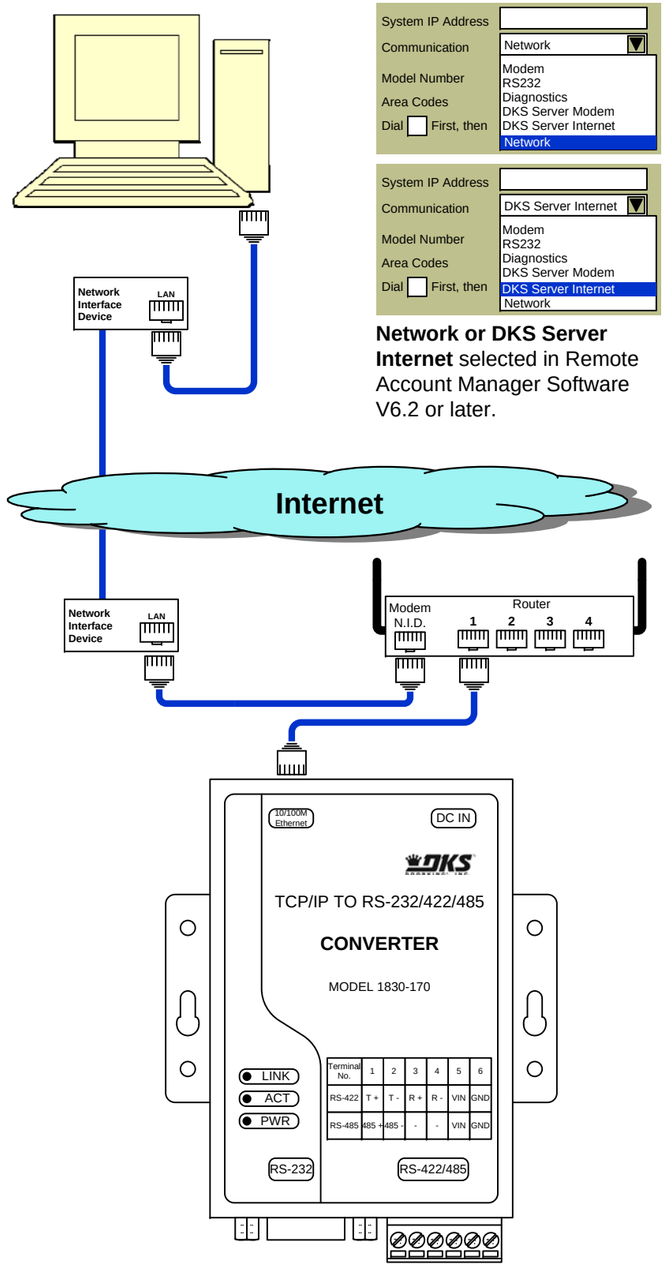

Network or DKS Server Internet selected in Remote Account Manager Software V6.2 or later.

General Information

You can use the 1830-176 Converter Kit with the following DKS Systems:
1830 Series Telephone Entry and Access Control Systems (1833, 1834, 1835, 1837, 1838).

Refer to these instruction manuals for additional information:
P/N 1835-065 Telephone Entry Systems Installation Manual
P/N 1838-065 Access Controller Installation Manual
P/N 1835-066 Remote Account Manager Software User Manual

Connect to 1830 Series Circuit Board RS-232 Terminals

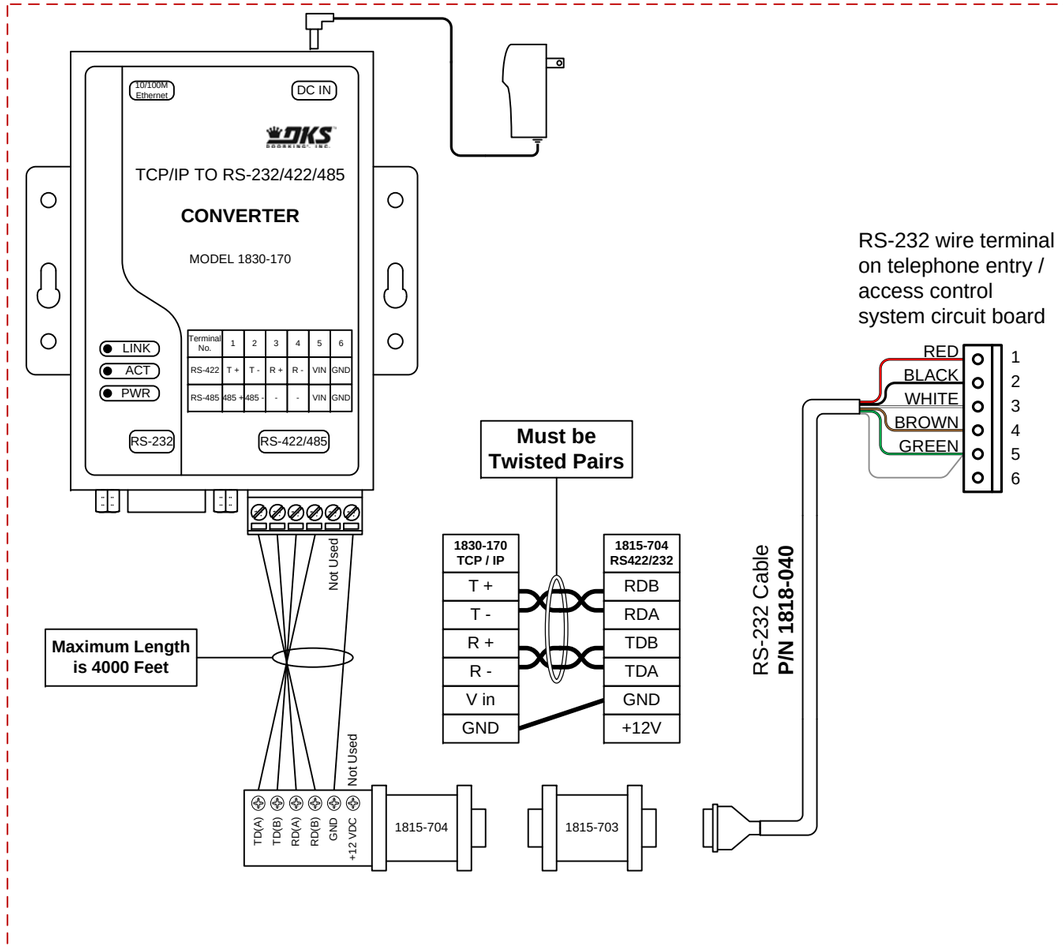

Connection via **LAN**

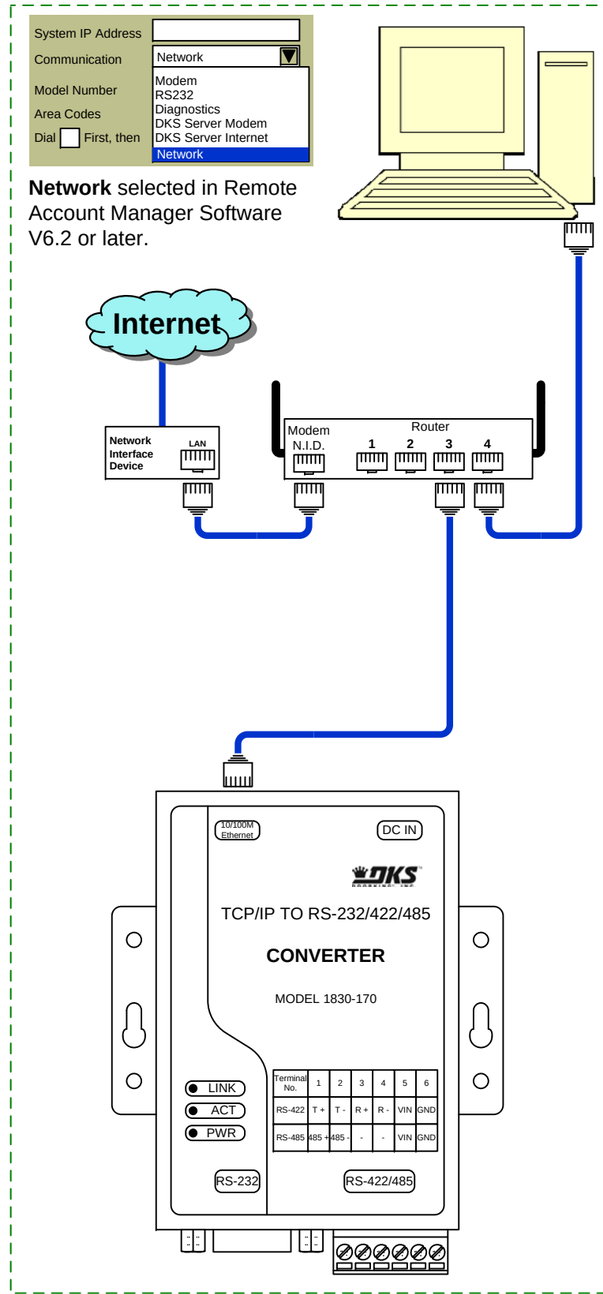

Network selected in Remote Account Manager Software V6.2 or later.