Installation/Owner's Manual

Model 1000

Inverter / Power Back-Up System

Use this manual for circuit board 2355-010 Revision A or higher.

1000-065-M-1-19

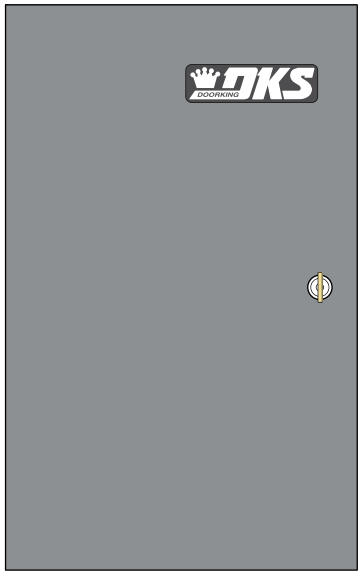

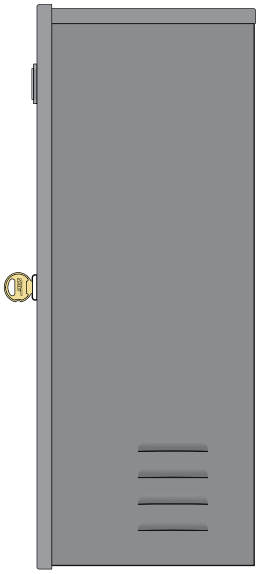

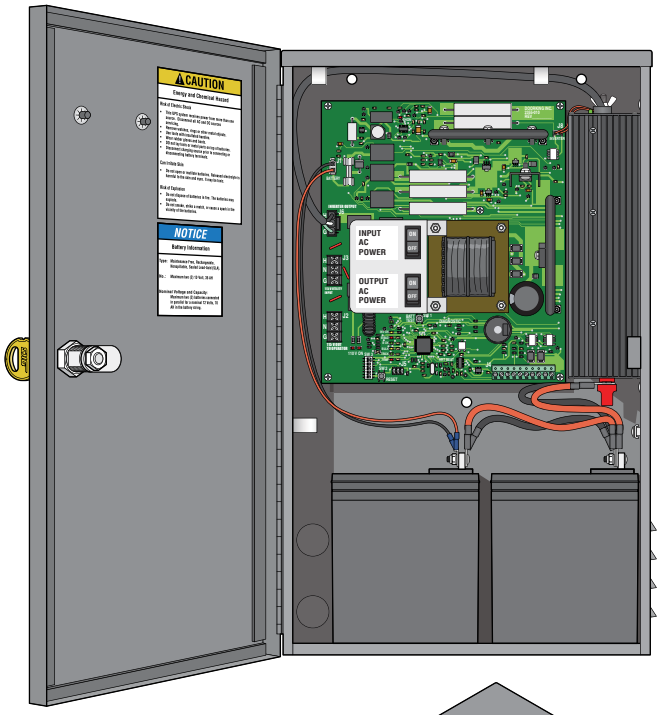

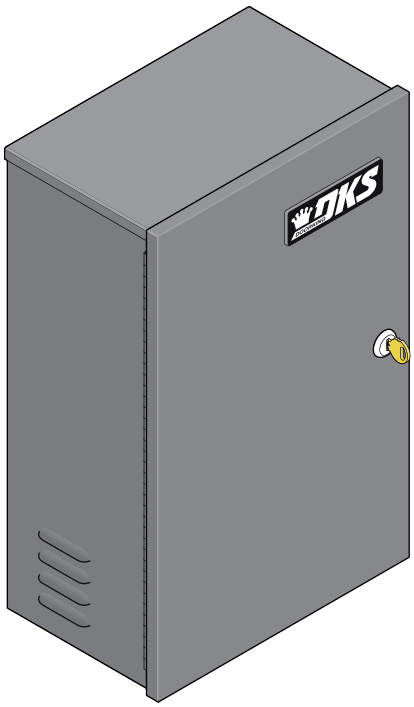

IMPORTANT! The model 1000 can only be used with products that use a PSC (Permanent Split Capacitor) motor. Do Not use the model 1000 on products that ultilize a motor with start windings as the start-up amerage draw on this type of motor exceeds the maximum output available from the model 1000 and will cause damage to the inverter. The differences in these two types of motors is difficult to recognize, so we suggest that you contact the manufacturer to determine what type of motor is used in their product.

Date Installed: _____

Installer/Company Name: _____

_____

Phone Number: _____

Circuit Board Serial Number and Revision Letter: _____

Leave Manual with Owner

Copyright 2019 DoorKing®, Inc. All rights reserved.

Intertek 9900288

Conforms To UL STD 1778

Certified To CSA STD C22.2 # 107.3

DOORKING®

SPECIFICATIONS

Use this manual for the Model 1000 inverter with circuit board 2355-010 Rev A or higher ONLY.

Continuous Power Output	1000 Watt - **Pure Sine Wave** Two Batteries
AC Output Voltage	120 VAC
Output Frequency	60 Hz
Output Wave Form	Pure Sine Wave
DC Input Voltage	12 VDC
Low Voltage Alarm	2 VDC - 10.8 VDC
Low Voltage Shutdown	9.8 VDC
Efficiency	85%
Over Voltage Protection	15-16 VDC
Operating Temp Range	23°F (-5°C) to 104°F (40°C)

1000 Watt (P/N 1000-083)

can be used to power a single 1/2 HP, two (2) 1/2 HP gate operator system or a single 1 HP gate operator system when operating continuously.

Optional Mounting Post Kit

P/N 1000-045

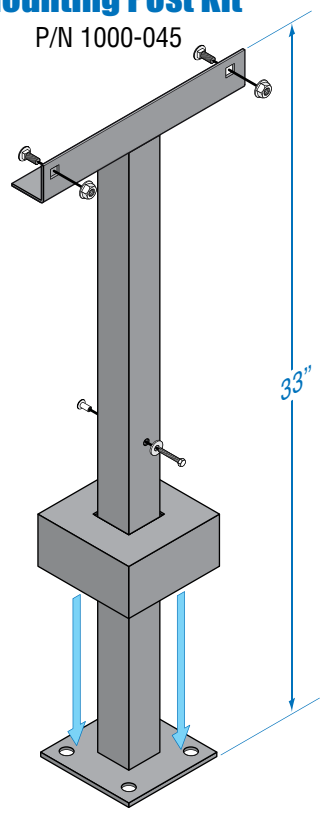

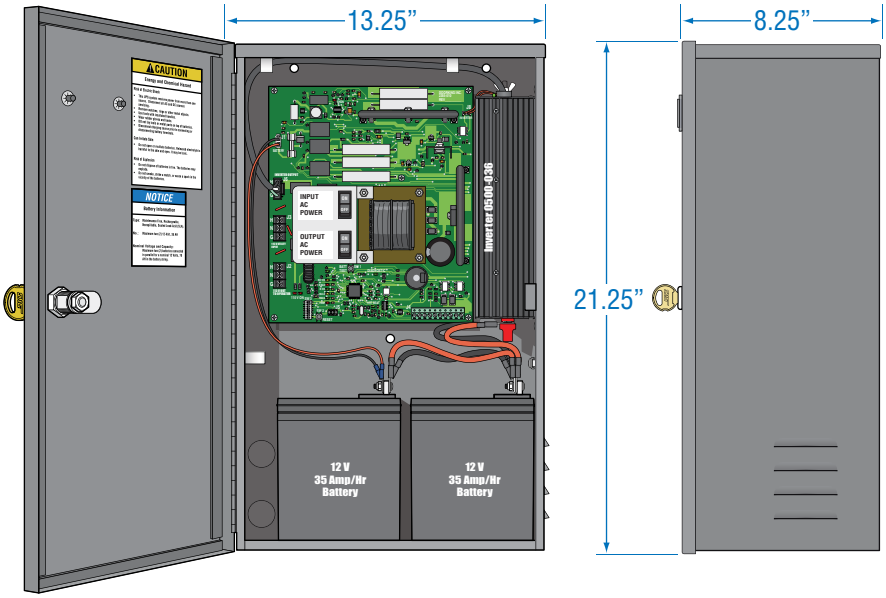

DoorKing, Inc. reserves the right to make changes in the products described in this manual without notice and without obligation of DoorKing, Inc. to notify any persons of any such revisions or changes. Additionally, DoorKing, Inc. makes no representations or warranties with respect to this manual. This manual is copyrighted, all rights reserved. No portion of this manual may be copied, reproduced, translated, or reduced to any electronic medium without prior written consent from DoorKing, Inc.

SPECIFICATIONS 1

Safety Precautions 3

SECTION 1 - INSTALLATION 4

1.1 Location of Inverter 4
1.2 Mounting Inverter 4
1.3 Sample Installations 5

SECTION 2 - WIRING 6

2.1 Wiring Gate Operator(s) 6
2.2 Wiring AC Input Power 7
2.3 Wiring Battery(s) 8

SECTION 3 - DESCRIPTIONS AND ADJUSTMENTS 9

3.1 Low Battery Level 9
3.2 J4 Terminal 9
3.3 LEDs 9-10
3.4 Buttons and Alarm 10
3.5 DIP-Switch Settings 10
3.6 Status Report Function 11
3.7 Replacement Parts / Accessories 11

SECTION 4 - MAINTENANCE AND TROUBLESHOOTING 12

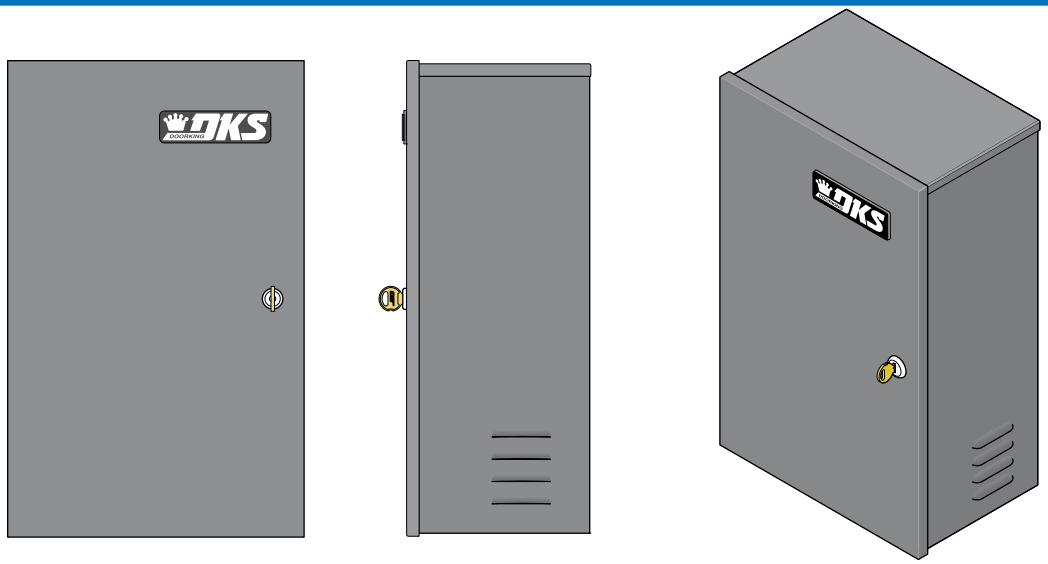

Safety Precautions

This manual contains important safety and operating instructions and specifications for DKS Model 1000 Inverter / Backup Power System. This manual is the property of the owner of the equipment and must be left in their possession after the installation of the product is complete. **SAVE THESE INSTRUCTIONS!**

WARNING! The Model 1000 produces lethal voltages.

CAUTION – The Model 1000 should be installed by a qualified electrician and operated with care and attention. The batteries are capable of supplying hazardous current. Follow the instructions carefully.

CAUTION – Risk of Energy Hazard, 12 V, 35 Ampere-hour battery. Dangerous voltages are present even when the AC is off. Remove personal metal items such as rings, bracelets, necklaces, and watches when working with electrical circuits. These items can cause a short-circuit current high enough to weld a ring, or the like, to metal causing severe burns.

CAUTION – Disconnect the charging source prior to connecting or disconnecting the batteries. Do not install or connect batteries to this unit until instructed to do so. Failure to comply with this instruction can cause damage or complete failure of the inverter unit.

CAUTION – To reduce risk of injury, use only the type of batteries specified. Maintenance-Free, Rechargeable, Nonspillable, Sealed Lead-Acid (SLA), 12-Volt, 35.0 AH.

BATTERIES MUST HAVE SCREW TYPE TERMINALS. DO NOT USE BATTERIES WITH CLAMP TYPE TERMIANLS.

CAUTION – Do not dispose of batteries in a fire. The battery may explode. Batteries should be taken to a recycling center.

CAUTION – Do not open or mutilate the batteries. Released electrolyte is harmful to skin and eyes. It is toxic.

Never charge a frozen battery.

Someone should be within range of your voice to come to your aid when you work near batteries.

NEVER smoke or allow a spark or flame in vicinity of the batteries.

Be extra cautious when working with metal tools on and around batteries. Use tools with insulated handles. Do not lay tools or metal parts on top of the batteries. The potential exists to short-circuit the batteries or other electrical parts that may result in a spark that could cause an explosion.

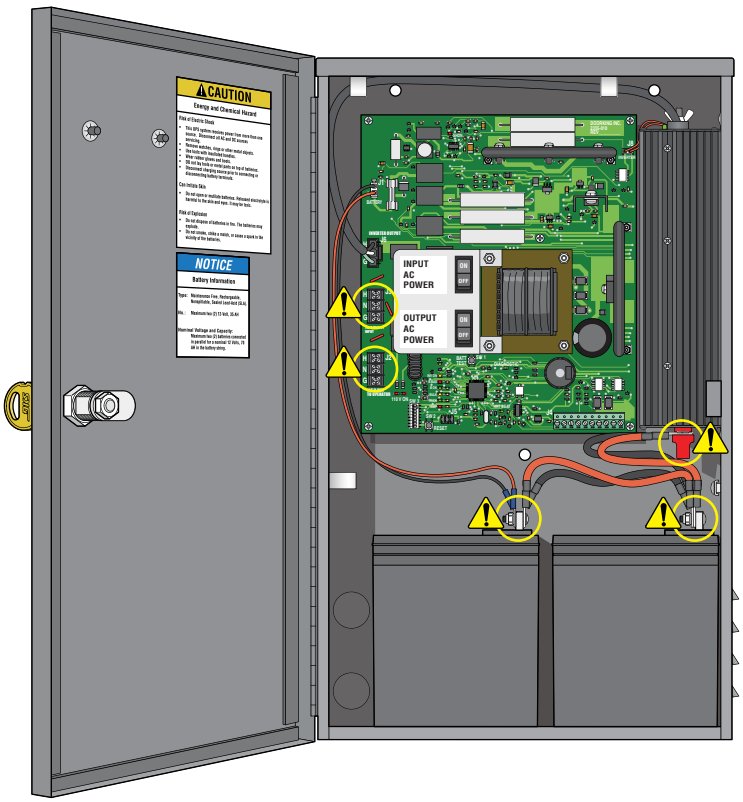

NO SMOKING

NO FIRE

⚠ CAUTION

– Risk of Electrical Shock –

Hazardous live parts inside this unit are energized from the battery supply even when both AC power toggle switches are turned OFF and AC power has been disconnected.

SECTION 1 - INSTALLATION

1.1 Location of Inverter

Prior to installing the Model 1000, careful thought must be given as to where the unit will be installed. The system operates best when it can be installed as physically close as possible to the equipment that it is intended to operate during power outages. This reduces line loss.

The effective capacity of a battery is reduced when cold. This phenomenon is more significant with lead-acid type batteries than with other batteries. When the internal temperature of a lead-acid battery is 32°F (0°C), the capacity can be reduced by as much as 50%. If extremely cold temperatures are expected, you should consider installing the Model 1000 in a heated equipment room.

The Model 1000 should be protected from high temperatures as well. High battery temperatures will result in short battery life. Install the backup system in a shaded area or inside an air-conditioned equipment room if extremely high temperatures are the norm.

1.2 Mounting Inverter

The Model 1000 inverter has three (3) mounting holes on back of the cabinet. The holes should be used with appropriate hardware (not supplied) to mount the cabinet to a vertical surface. There are five (5) 3/4" conduit knockouts; three (3) on the bottom and two (2) on the back. These should be used for wiring. See next page for typical installations.

Important: Remove the circuit board to protect it while mounting the cabinet.

Do not drill any additional holes in the cabinet. Drilling produces metal filings, which can cause shorts on the circuit board and **will void the warranty.**

DoorKing offers a mounting post kit (P/N 1000-045) when no vertical surface is available nearby to mount the Inverter cabinet to. Must be mounted on a concrete pad.

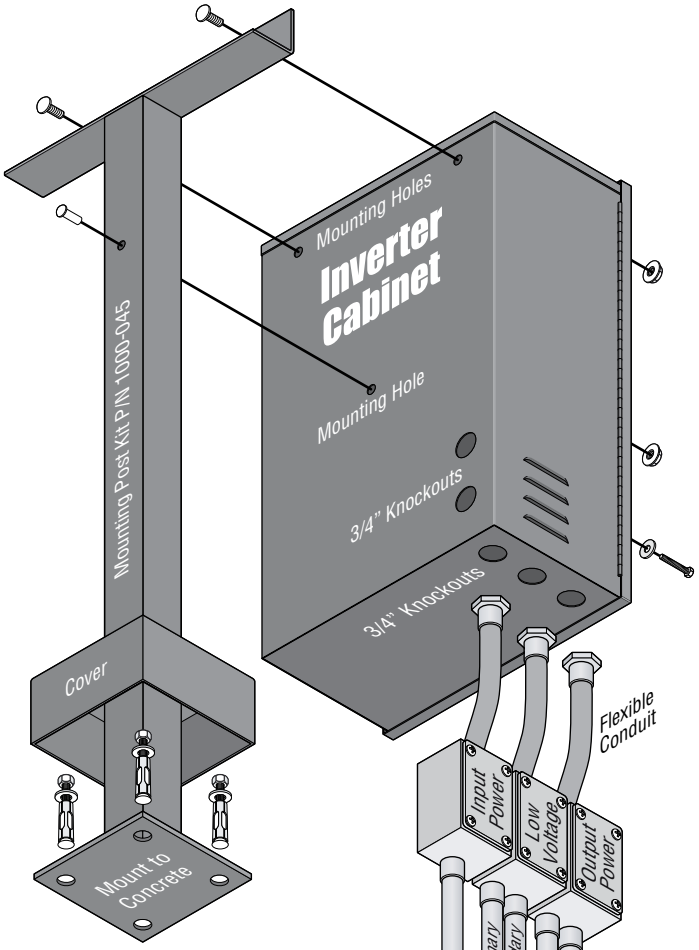

To attach post to concrete, DoorKing recommends four (4) 3/8" x 3" sleeve anchors (not supplied). Do Not mount post on asphalt.

Typical conduit configuration (not supplied).

1.3 Sample Installations

- Typical inverter installations (the secondary operator conduits are shown for those applications where a secondary operator may be used). **Your application may vary from this depending on your specific needs.**
  - Be sure that all conduits are installed in accordance with local codes.
  - **Never** run high voltage rated wire insullation and low voltage rated wire insullation in the same conduit.

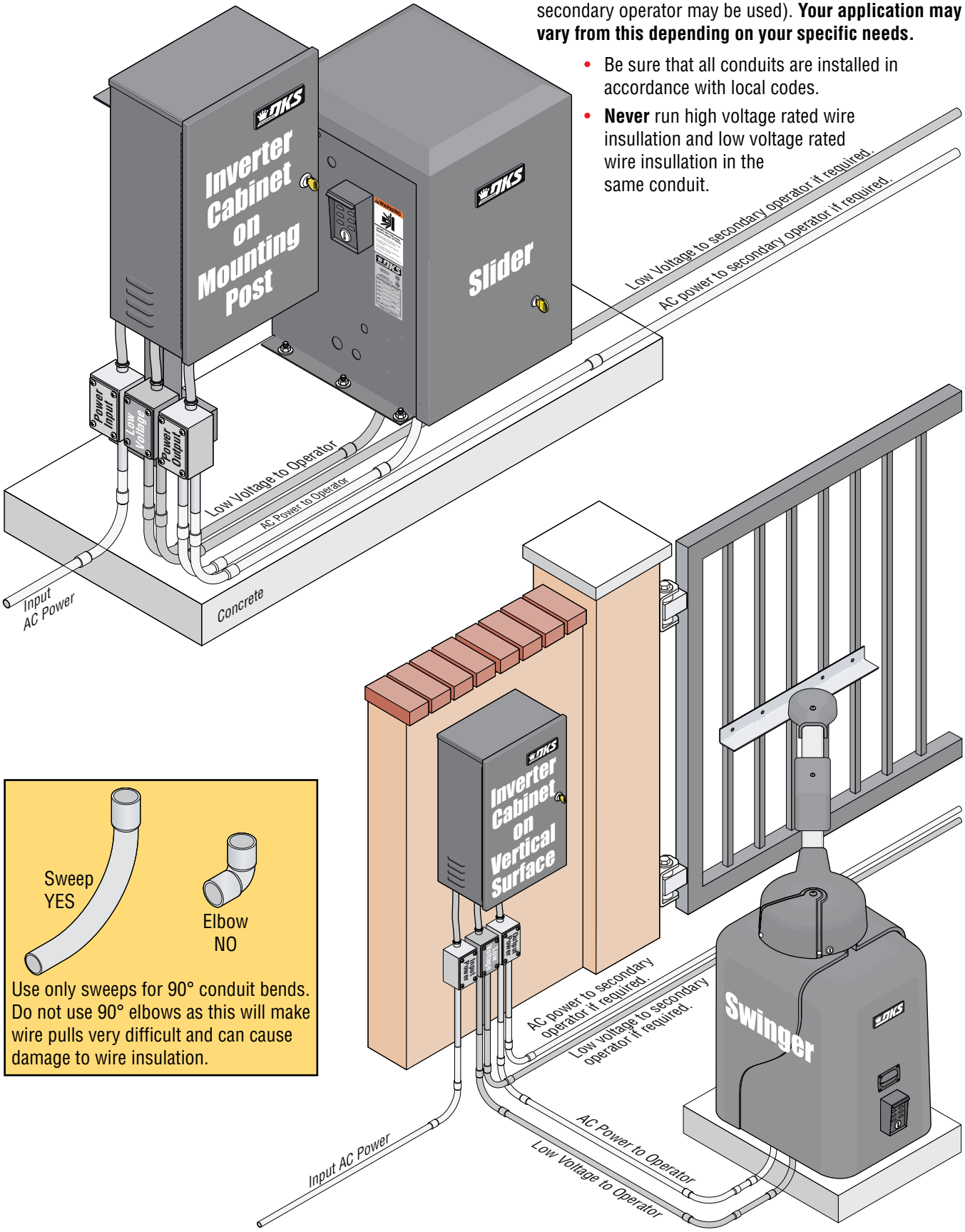

Use only sweeps for 90° conduit bends. Do not use 90° elbows as this will make wire pulls very difficult and can cause damage to wire insulation.

SECTION 2 - WIRING

Wiring of the Model 1000 should be performed by a qualified licensed electrical contractor to insure that the installation complies with local codes and ordinances.

The output of the Model 1000 should at NO TIME be connected to public power or a generator.

Grounding Instructions - This back-up power supply must be connected to a grounded, permanent wiring system.

WARNING! Never physically disconnect the batteries while the system is activated. Always turn the system's two AC power toggle switches OFF before disconnecting the batteries.

2.1 Wiring Gate Operator(s)

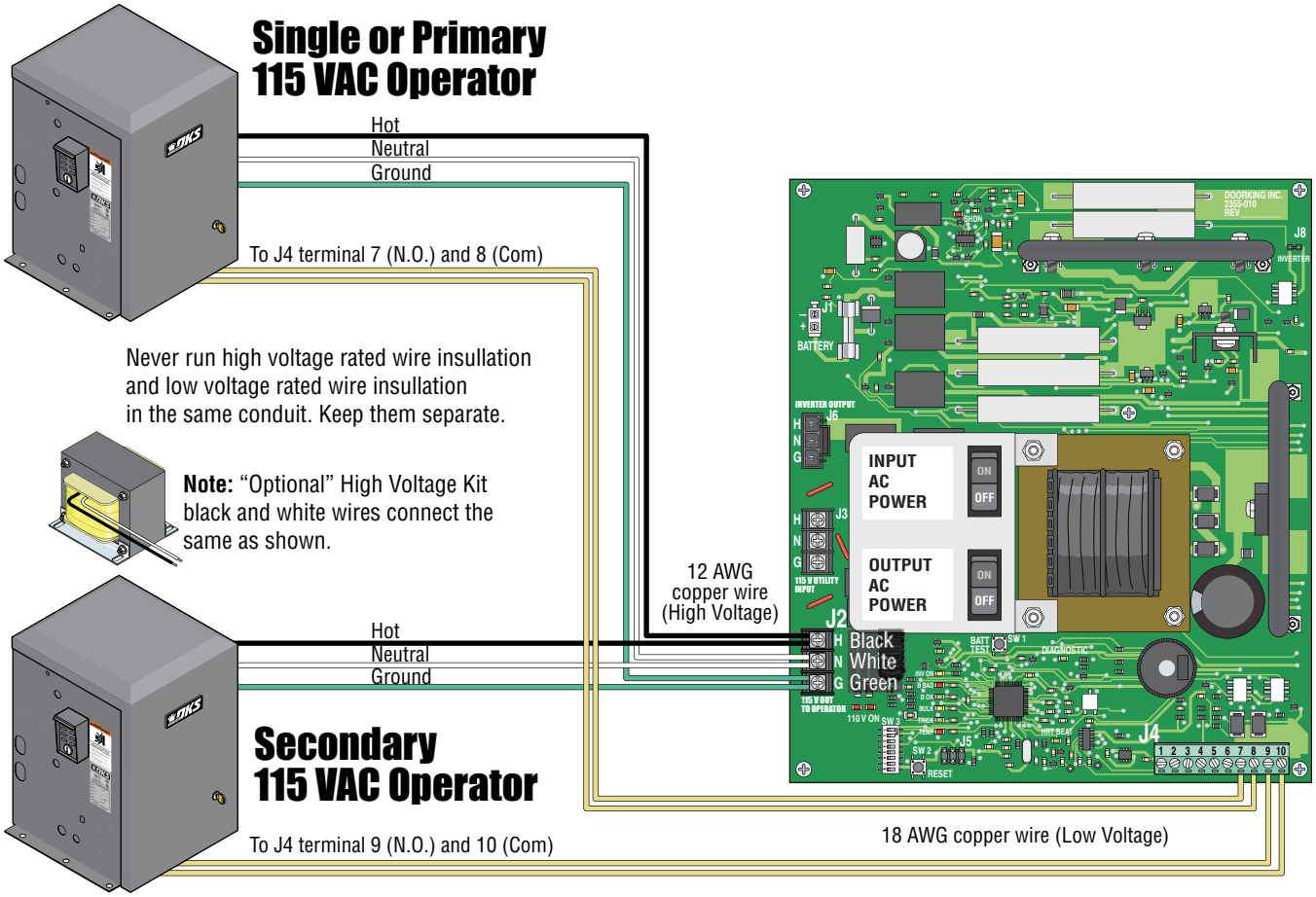

Connect the J4 terminal to the opening device terminal connections of each operator. When the inverter runs low on battery power, the inverter can automatically open the gate(s). (See DIP-switches on page 10).

IMPORTANT! The model 1000 can only be used with products that use a PSC (Permanent Split Capacitor) motor. Do Not use the model 1000 on products that ultilize a motor with start windings as the start-up amerage draw on this type of motor exceeds the maximum output available from the model 1000 and will cause damage to the inverter. The differences in these two types of motors is difficult to recognize, so we suggest that you contact the manufacturer to determine what type of motor is used in their product.

2.2 Wiring AC Input Power

WARNING! Be sure that both the **Input AC Power** and **Output AC Power** switches are **OFF** and remain **OFF**!

- Connect the input power wire to the J3 terminal.
- Input power wire must be connected to a grounded, permanent wiring system.

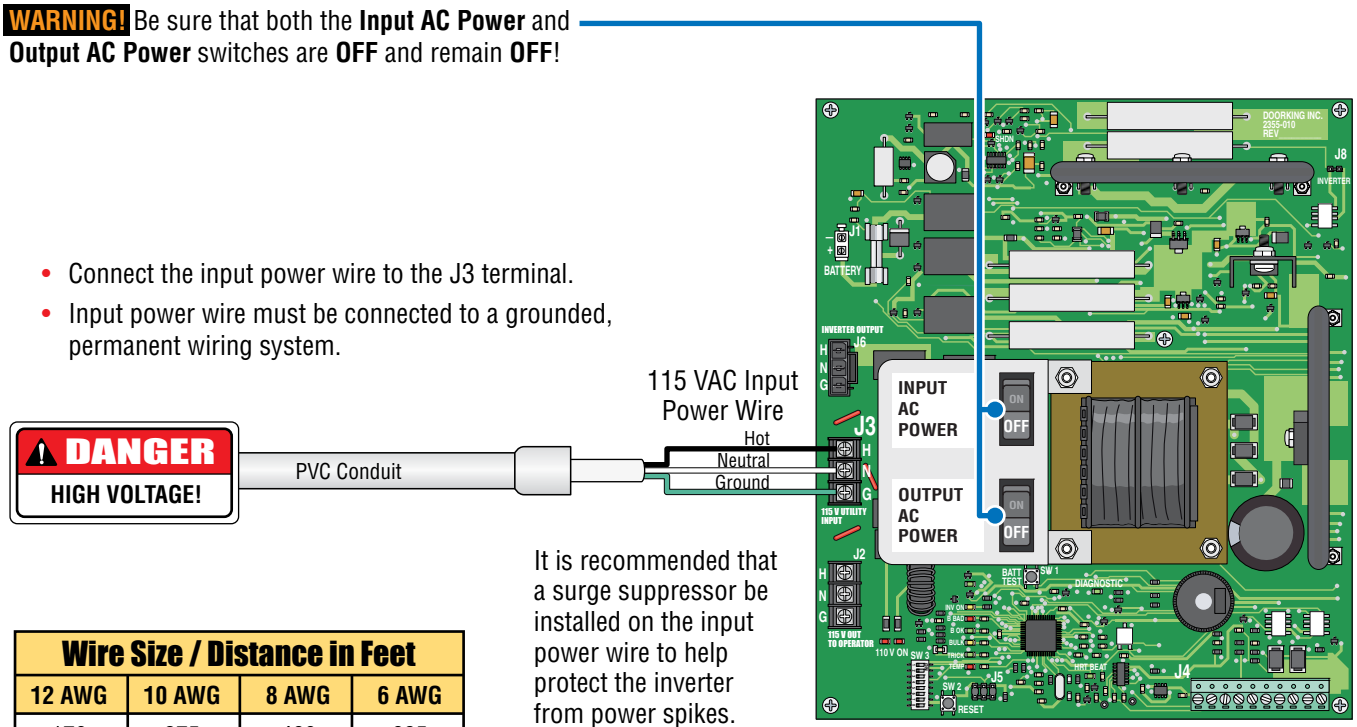

It is recommended that a surge suppressor be installed on the input power wire to help protect the inverter from power spikes.

Wire Size / Distance in Feet			
12 AWG	10 AWG	8 AWG	6 AWG
170	275	460	685

Never run high voltage rated wire insulation and low voltage rated wire insulation in the same conduit. Keep them separate.

Important Information to Know Before Connecting Battery:

- **Use caution when using tools to make all the battery connections. DO NOT TOUCH THE POSITIVE AND NEGATIVE BATTERY TERMINALS TOGETHER!**

- Make sure all wire connections are correct and secure. **A loose wire or a wire connected to the wrong terminal can cause serious injury and/or damage the inverter.** It will happen suddenly while connecting the batteries and turning on the inverter power switches. Double checking all wire connections **before** applying power is **ALWAYS** a good idea.

- Previously installed DoorKing Models 9050, 9100 and 9150 slide gate operators will automatically reset when switching from their old AC power source to the new DC Inverter power. The **FIRST** open command given to these operators after the DC inverter power has been applied will automatically run their normal **"Multiple gate cycles"** that will locate and remember the gate's open and close positions. These operators will function normally after their automatic sequence has finished.

- When using this inverter on **ANY** existing or new gate operator, test **ALL** of the gate operator systems, sensitivity settings (ERD), limits, safety devices etc. in accordance with the specific gate operator manufacturer's recommendations. **Never** assume that an **existing** AC powered operator will function exactly the same way it did, with its existing settings, after connecting the 1000 series inverter power. Some re-adjustment may be necessary before putting the operator back into service.

2.3 Wiring Battery(s)

WARNING! The Model 1000 produces lethal voltages.

WARNING! Do not connect batteries until installation, gate operator and AC power wiring is complete. The batteries will be the last component to be connected.

WARNING! THE INVERTER IN THIS BACKUP POWER SYSTEM IS NOT REVERSE-POLARITY PROTECTED!! If the positive terminal of the battery is connected to the negative terminal of the inverter and vice versa, the probable result is failure of every power FET in the inverter. To compound your misfortune, this type of failure is very obvious **AND IS NOT COVERED UNDER THE WARRANTY.** Pay close attention and double check when making the battery connections.

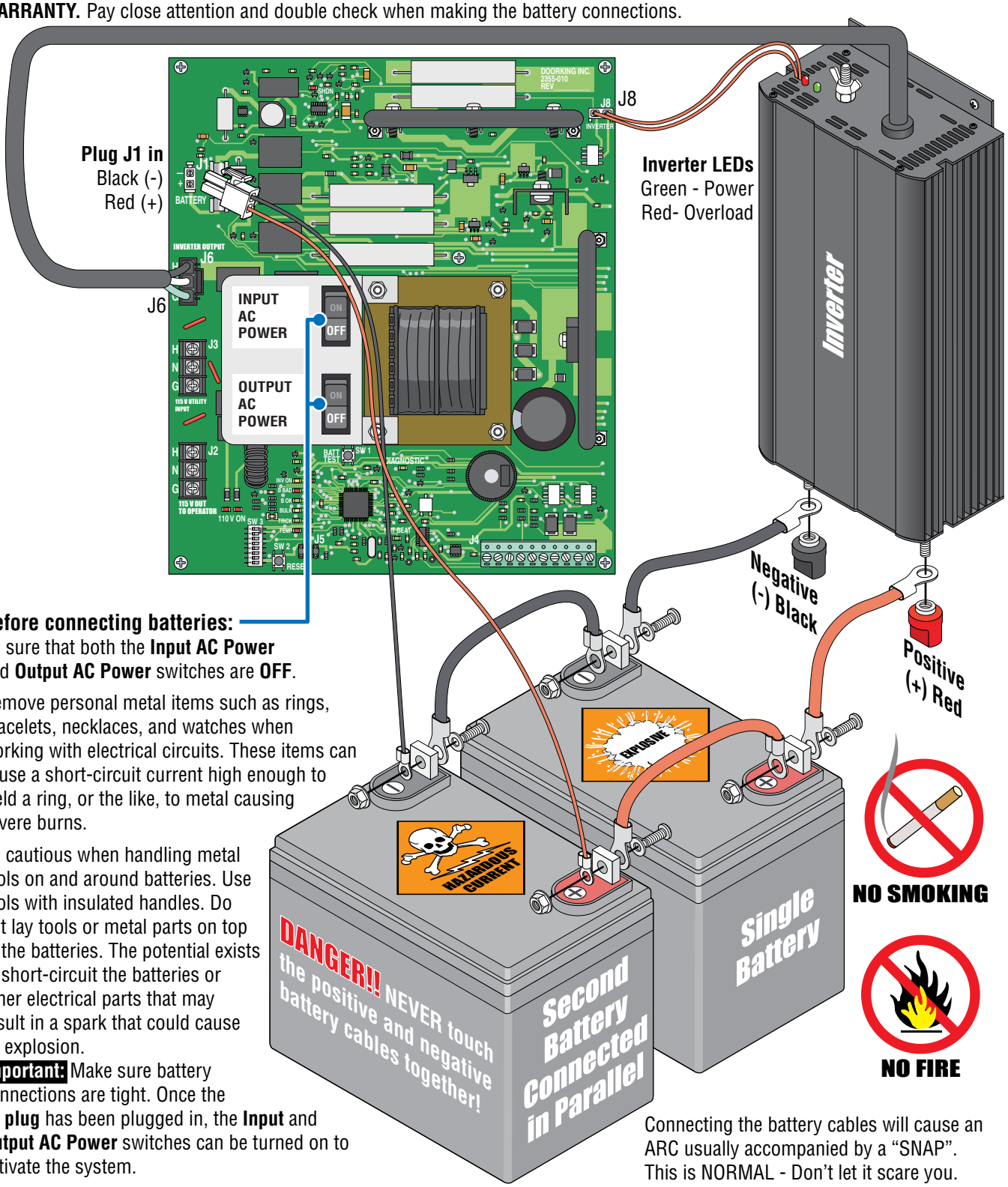

Before connecting batteries:
Be sure that both the **Input AC Power** and **Output AC Power** switches are **OFF**.

Remove personal metal items such as rings, bracelets, necklaces, and watches when working with electrical circuits. These items can cause a short-circuit current high enough to weld a ring, or the like, to metal causing severe burns.

Be cautious when handling metal tools on and around batteries. Use tools with insulated handles. Do not lay tools or metal parts on top of the batteries. The potential exists to short-circuit the batteries or other electrical parts that may result in a spark that could cause an explosion.

Important: Make sure battery connections are tight. Once the **J1 plug** has been plugged in, the **Input** and **Output AC Power** switches can be turned on to activate the system.

Connecting the battery cables will cause an ARC usually accompanied by a "SNAP". This is NORMAL - Don't let it scare you.

SECTION 3 - DESCRIPTIONS AND ADJUSTMENTS

3.1 Low Battery Level

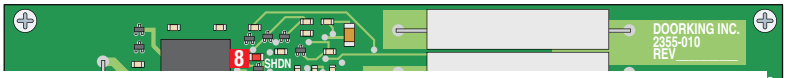

This setting determines how low the Inverter's battery level will get before the inverter enters into "**shutdown mode**" and will not cycle the gate anymore. This adjustment should only be made after the gate has been idle for **30 minutes** or longer (single battery) or **60 minutes** or longer (two batteries). Adjusting **clockwise INCREASES** the amount of voltage the battery has when the inverter enters "**shutdown mode**", used for heavier gates (decreases total gate cycles). Adjusting **counter-clockwise DECREASES** the amount of voltage the battery has when the inverter enters "**shutdown mode**", used for lighter gates (increases total gate cycles). This adjustment is factory set in the middle.

3.2 J4 Terminal

J4 terminal connector can be unplugged from circuit board for easy wire connections.
WARNING! Be cautious when using tools around all battery connections.

No.	J4 Description
1	RS-232 Serial Data (DB-9 Connector – Pin 2)
2	RS-232 Busy (DB-9 Connector – Pin 4)
3	RS-232 Signal Ground (DB-9 Connector – Pin 5)
4	Not Used
5	Not Used
6	Not Used
7	Relay 1 (Primary Operator) Normally Open
8	Relay 1 (Primary Operator) Common
9	Relay 2 (Secondary Operator) Normally Open
10	Relay 2 (Secondary Operator) Common

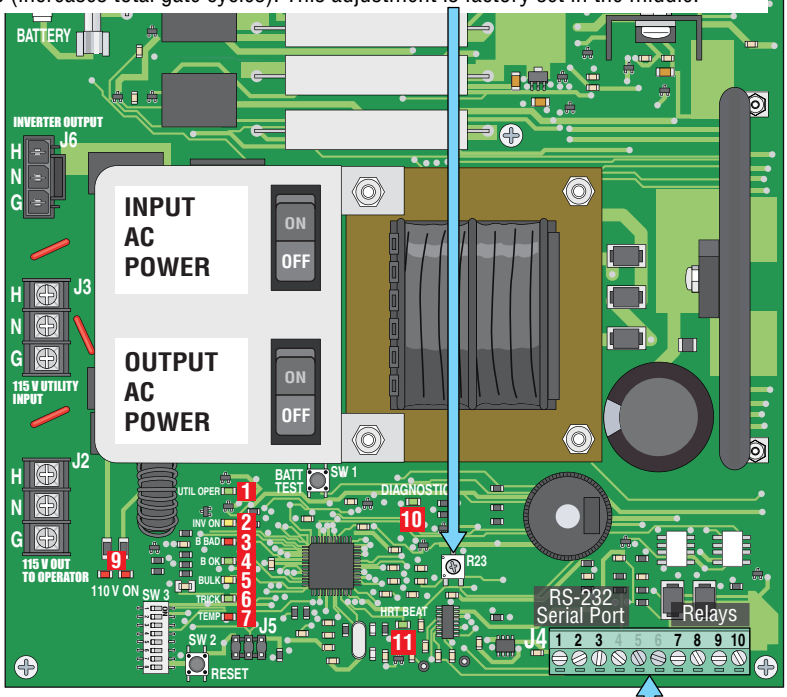

3.3 LEDs

The Model 1000 has 12 LED indicators to show the status of the inverter, batteries and to assist in troubleshooting. Whenever a DIP-switch setting is changed, the **RESET** button must be pressed before the new setting takes affect. Check and review ALL switch settings prior to pressing the reset button.

Location and Label	LED Color and Description
1 UTIL OPER	**Green LED** indicating that the 115 VAC power output at J2 is sourced from the utility company and the inverter is in stand-by mode.
2 INV ON	**Yellow LED** indicating that primary (utility company) power is unavailable and the 115 VAC power at J2 is being sourced from the inverter.
3 B BAD	**Red LED** blinks when the battery has been tested to be low, comes on steady when battery is bad.
4 B OK	**Green LED** indicates the battery has been tested and is good.
5 BULK	**Yellow LED** indicates that the battery is being bulk charged; blinking indicates that the battery is at 90% of full charge.
6 TRICK	**Green LED** indicates that the battery is fully charged and the system is applying a trickle charge to it to maintain the full charge.
7 TEMP	**Red LED** indicates that the battery is not being charged because the temperature is outside the battery safe operating range: 23°F (-4°C) to 126°F (52°C).
8 SHDN	**Red LED** located in the upper left of the circuit board. This LED is ON when the system has shut down the inverter because of low battery voltage.
9 110V ON	**2 Red LEDs** indicates that 115 VAC is present at the power output terminal (J2).
10 DIAGNOSTIC	**Green LED** continually runs diagnostics check, see table on next page for LED blinking descriptions.
11 HRT BEAT	**Green LED** blinking indicates that the microprocessor is operating.

10 DIAGNOSTIC LED Descriptions

1 blink = Initial charge begins
2 blinks = Bulk charging
3 blinks = Resumes from out of temperature charge state
4 blinks = Trickle charge
5 blinks = Charge complete
6 blinks = Charge ended because of bad battery

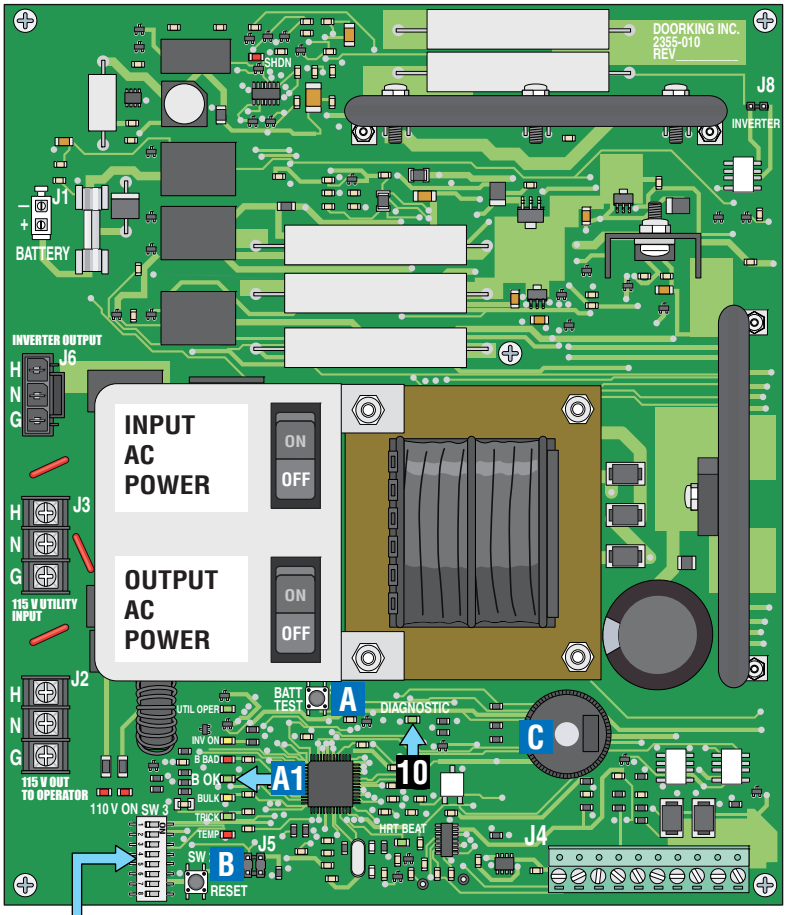

3.4 Buttons and Alarm

A Battery Test Button

Pressing the **BATT TEST** push button will initiate a quick test of the battery and its charge state. The test takes 20-30 seconds to complete. When the **BATT TEST** button is pressed, the **A1 B OK** led will turn **OFF**. When the test is complete, the **B OK** led will turn **ON**.

B Reset Button

Pressing the **RESET** push button will reset the circuit board to its start-up state.

C Alarm - Beep Alert

Can Be turned ON or OFF, SW 3, switch 4 (See below). When ON, it beeps every 30 seconds when battery charging has failed or the board is in a shutdown condition.

3.5 DIP-Switch Settings

SW #	Description	OFF	ON
1	Low Battery Shutdown	**HIGH – Shutdown** occurs at a higher battery voltage. Use with heavier gates.	**LOW – Shutdown** occurs at a lower battery voltage. Use with two battery systems and/or lighter gates.
2	Battery Test	Battery Test OFF.	Battery test automatically every few days to determine battery condition.
3	Number of Batteries	Two (2) batteries.	One (1) battery.
4	Alarm - Beep Alert	Beep Alert is OFF.	Beeps every 30 seconds when battery charging has failed or the board is in a shutdown condition.
5	Relay Activation on AC Power Loss	When primary AC (Utility power) is lost – relays (J4 terminal) will activate immediately to open gate, then the system will enter a shut down condition.	When primary AC (Utility power) is lost – the system will perform whatever function switch 6 is set at.
6	Low Battery	When battery is too weak to sustain operation – system shuts down.	When battery is too weak to sustain operation – the system will activate each relay (J4 terminal) individually 40-50 seconds apart (Open gates), and then shut down.
7	Relay Activation on AC Power Restore	Relays (J4 terminal) are not activated.	Relays (J4 terminal) activate for 1/2-sec. when primary AC (Utility power) returns or when board powers up from a shutdown condition.
8	Must be set to ON.	Do not set this switch to the OFF position.	Set this switch to the ON position.

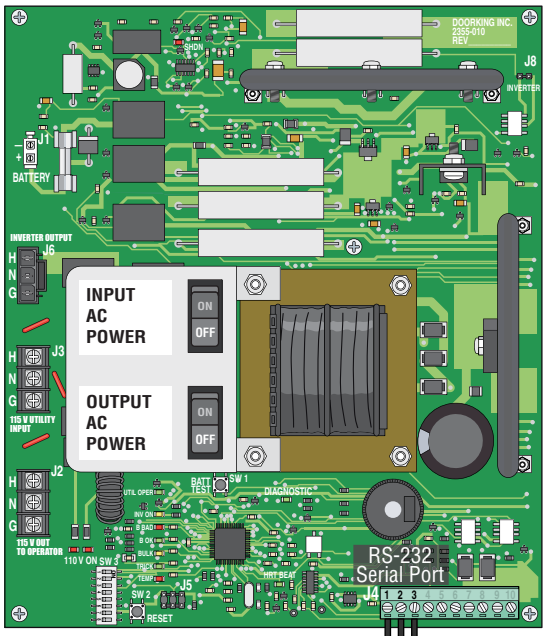

3.6 Status Report Function

The Model 1000 Inverter has a status report function that can be downloaded to a PC by physically wiring a DB-9 connector (not supplied) to the J4 terminal (RS-232 Serial port). This feature can be used for trouble-shooting purposes. The Model 1000 communicates at 300 baud, 8 data bits, no parity, 1 stop bit. A byte will be sent per functional change.

Be sure that both the **Input AC Power** and **Output AC Power** switches are **OFF** before connecting the DB-9 connector. The J4 terminal connector can be unplugged from circuit board for easy wire connections.

WARNING! Be cautious when using tools around all battery connections.

J4 1 - RS-232 Serial Data (DB-9 Connector – Pin 2)
J4 2 - RS-232 Busy (DB-9 Connector – Pin 4)
J4 3 - RS-232 Signal Ground (DB-9 Connector – Pin 5)

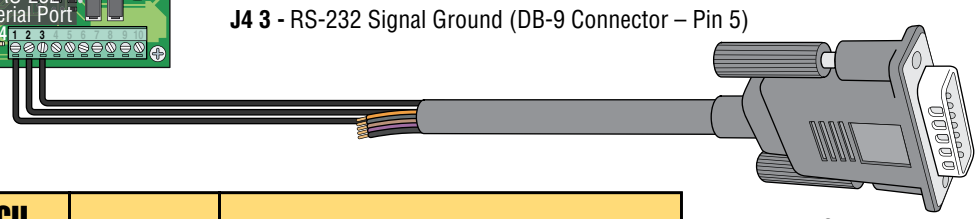

DB-9 Connector (not supplied)

ASCII Character	Hex Value	Description
0	30	AC failure detected
1	31	AC present detected
2	32	System switched to battery operation
3	33	System switched to AC operation
4	34	System shut down because of low battery
5	35	Battery test initiated by timer
6	36	Battery test initiated by push button
7	37	Battery tested good
8	38	Battery tested weak
9	39	Battery tested bad
:	3A	Battery charge failed because of bad battery
;	3B	Battery charge ended good
<	3C	Temperature outside of operating range

3.7 Replacement Parts / Accessories

Part Number	Description
1000-048	12 Volt, 35 AH Battery and Cable Assembly. Order this to add a second battery to the 1000 Watt inverter system.
1801-005	12 Volt, 35 AH replacement battery.
1000-044	Battery Cables.
2355-010	Circuit Board.
0500-036	1000 Watt replacement **pure** sine wave inverter module.
1000-045	Mounting Post Kit. Self-standing post for the inverter cabinet when no vertical mounting surface is available.

SECTION 4 - MAINTENANCE AND TROUBLESHOOTING

4.1 Maintenance

This inverter/back-up power system is part of the gate operator's normal scheduled maintenance. Make sure all plug in, terminal and battery connections are secure. Test the batteries with the BATT TEST button on the circuit board and replace if necessary. Battery life will vary greatly depending on temperature and amount of battery only operator cycling. The circuit board LEDs and alarm will alert you if a problem has occurred and should be checked between normal scheduled maintenance periods to monitor the status of the back-up system, especially when battery power is being used to cycle the operator(s).

4.2 Troubleshooting

The Model 1000 has 12 LED indicators on the circuit board to point out problems and assist in troubleshooting (See LED descriptions on page 9 and 10). A PC connected to the inverter's J4 terminal will help diagnose problems (See Status Report Function descriptions on previous page).

Previously installed DoorKing Models 9050, 9100 and 9150 slide gate operators will automatically reset when switching from their old AC power source to the new DC Inverter power. The **FIRST** open command given to these operators after the DC inverter power has been applied will automatically run their normal **"Multiple gate cycles"** that will locate and remember the gate's open and close positions. These operators will function normally after their automatic sequence has finished.

Never assume that an **existing** AC powered operator will function exactly the same way it did, with its existing settings, after connecting the Model 1000 inverter power. Some re-adjustment of the sensitivity settings (ERD), limits, safety devices etc. in accordance with the specific gate operator manufacturer's recommendations may be necessary before putting the operator back into service.

Installation/Owner's Manual

Model 1000

Inverter / Power Back-Up System

Use this manual for circuit board 2355-010 Revision A or higher.

1000-065-M-1-19

IMPORTANT! The model 1000 can only be used with products that use a PSC (Permanent Split Capacitor) motor. Do Not use the model 1000 on products that ultilize a motor with start windings as the start-up amerage draw on this type of motor exceeds the maximum output available from the model 1000 and will cause damage to the inverter. The differences in these two types of motors is difficult to recognize, so we suggest that you contact the manufacturer to determine what type of motor is used in their product.

www.doorking.com

DoorKing, Inc.
120 S. Glasgow Avenue
Inglewood, California 90301
U.S.A.

Phone: 310-645-0023
Fax: 310-641-1586