CHAMBERLAIN®

LiftMaster®

PROFESSIONAL

ESTATE SERIES

CONTROLLER BOARD

B3

INSTALLATION MANUAL

MODEL SW2000-B3

HEAVY DUTY, HIGH CYCLE SLIDE GATE OPERATOR

MODEL SW2000-B3 IS FOR VEHICULAR PASSAGE GATES ONLY, NOT INTENDED FOR PEDESTRIAN PASSAGE GATE USE

3 YEAR WARRANTY
Serial # _____ (located on electrical box)
Installation Date _____

C UL US

TABLE OF CONTENTS

SAFETY SUMMARY **5**
BASIC INSTALLATION HINTS AND RULES **6**
SITE PREPARATION
LOCATION AND LAYOUT 7
PAD AND MOUNT 8
POWER WIRING 9
LOOP DETECTORS AND PHOTO-SENSORS 9
OTHER CONNECTIONS 9
MASTER/SECOND INTERCONNECTION (MASTER/SECOND SYSTEM ONLY) 9
GROUNDING 9
SYSTEM INSTALLATION
GATE AND PHOTO-SENSOR LAYOUT 10
MOUNTING GATE OPERATOR 11
CONNECTING POWER 11
RUNNING INPUT WIRING 12
SETTING GATE OPEN DIRECTION SWITCHES S2 AND S3 12
POWER UP PROCEDURE 13
USING MANUAL CONTROLS 13
GATE ARM INSTALLATION 14
SETTING LIMIT CAMS 15-16
GATE SENSITIVITY ADJUSTMENTS 17-18
SETTING GATE CONTROL SWITCH S1 19-20
CONNECTING INPUT WIRING 21-22
POST INSTALLATION PROCEDURES 22-24
FINAL ASSEMBLY OF GATE OPERATOR 25
PROGRAMMING THE RADIO RECEIVER 26
LIFTMASTER LOOP DETECTOR BOARDS (OPTIONAL) **27**
TROUBLESHOOTING AND MAINTENANCE
TROUBLESHOOTING 28-31
FAULT LIST 31
FAULTS AND THEIR CAUSES 32
MAINTENANCE 33-35
APPENDIX A: SYSTEM OPERATION REFERENCE **36-40**
CONTROLS 36
INDICATORS 37
FUNCTIONAL INPUTS 38-39
ADJUSTMENTS 40
CONNECTORS 40
APPENDIX B: SW 2000-B3 PARTS LIST **41-42**
GLOSSARY **43**
FCC REQUIREMENTS **44**
NOTICE TO CANADIAN USERS **45**

TABLE OF CONTENTS

Figure 1. Gate Operator Layout Options 7
Figure 2. Pad and Mount 8
Figure 3. Photo-Sensor Layout 10
Figure 4. AC Wiring 11
Figure 5. Gate Direction and UPS Low Battery Switch Locations 12
Figure 6. Manual Controls, Location and Use 13
Figure 7. Gate Arm Installation 14
Figure 8. Setting Right Gate Limit Cam 15
Figure 9. Setting Left Gate Limit Cam 16
Figure 10. Gate Sensitivity Adjustments Location 17
Figure 11. Gate Control Switch S1 Location And Details 19
Figure 12. Reclose Timer Enable and Adjustment Location 20
Figure 13. Control Board Wiring 21
Figure 14. Photo-Sensor Coverage Areas 24
Figure 15. Gate Operator Final Assembly 25
Figure 16. High Security and Normal Security Modes 26
Figure 17. Constant and Momentary Operations 26
Figure 18. Programming the Remote to the Receiver 26
Figure 19. Typical Swing Gate Loop Detector Configuration 27
Figure 20. Gate Operator Disassembly and Assembly 34
Figure 21. Exploded View 42

THE LIFTMASTER MODEL SW2000-B3 GATE OPERATOR

The LiftMaster model SW2000-B3 is a full featured, commercial swing gate operator with master/second wiring capability. The gate operator contains the following features:

- **Satisfies U.L. 325 requirements** for primary (motor current) and secondary (photo) obstruction senses.
- **Five different open inputs** are available for a variety of devices.
- **Alternate action OPEN/CLOSE inputs.**
- **Manual Open/Close/Stop inputs** are provided for three-button station.
- **Inside and outside Interrupt Loops and Photo-Sensors Inputs** enhance gate control and distinguish between entering and exiting traffic.
- **Gate lock relay** can be used for electromagnetic locks and CCTV cameras or lights.
- **Interrupt Bar input** is included for use with edge sensors.
- **Quick gate setup** is facilitated by eight-position dip switch.
- **Adjustable Reclose timer.**
- **Selectable anti-tailgate function** prevents two cars from entering on one open command.
- **Dynamic motor braking** limits gate overtravel.
- **Senses obstructions** through adjustable peak and fixed average motor current sense.
- **Two separate peak motor current sense adjustments** for reversing direction or stopping; one for clockwise motion and the other for counterclockwise motion.
- **Start-up current sense adjustment** offsets initial inrush current to the motor.
- **Obstruction Alarm** sounds off the second time the gate is obstructed.
- **Open Motor detection** in case of motor thermal overload.
- **Maximum Run Time** feature stops run-away motor in case of belt breakage.
- **Diagnostic LEDs** on controller board indicate gate operator actions and assist in troubleshooting.
- **Master/Second operation** for two operators on bi-part gates and vehicle trap gates.
- **Separated arm segment joints** reduce the risk of injury to users.
- **Two 115 VAC accessory plugs** provided.
- **24 VAC** accessory power provided.
- **True 1/2 HP high starting torque motor** reduces stalling.
- **80:1 worm gear reduction.**
- **Handles any gate weight** up to 1000 pounds and length up to 18 feet.
- **Quick disconnect arm cap** for fast and easy release of gate arm.
- **Cover access door** provides easy access to the control box.
- **Optional loop detector add-on boards** plug into the controller board for easy installation.

DIMENSIONS		WEIGHT	ELECTRICAL
Height	24"	159 lbs.	115 VAC, 60 Hz. Single Phase
Width	20"		15 amp (A separate 20 AMP circuit
Depth	23"		is required by most codes.)

SAFETY SUMMARY

It is important for everyone involved in the installation and operation of the Gate Operator to read the following warnings.

⚠⚠ WARNING

1. **READ AND FOLLOW ALL INSTRUCTIONS. Improper installation of a gate operator can result in a dangerous system. SAVE THESE INSTRUCTIONS.**
2. **A vehicle gate is a large, heavy object that is moved by an electric motor. A moving gate can cause serious injury or death! The safety and well-being of others depends on the installation of a safe system.**
3. **The entrance is for VEHICLES ONLY. Pedestrians must use a separate entrance. Always keep people and objects away from the gate. NO ONE SHOULD CROSS THE PATH OF THE MOVING GATE.**
4. **Choose one or more controls that together will allow complete control of the gate. Most importantly, the gate must be able to be stopped at all times in case of emergency, and the emergency control should be conveniently located, clearly marked and visible.**
5. **All controls must be kept out of the reach of small children. Serious injury or death can result from children playing with the controls.**
6. **All controls should be located so the person operating them can see the full area of gate movement.**
7. **Use the emergency release only when the gate is not moving.**
8. **KEEP GATES PROPERLY MAINTAINED. Have a qualified person make repairs to the gate hardware.**
   - **Test the gate operator safety features monthly. The gate MUST reverse on contact with a rigid object or stop when an object activates the non-contact sensors.**
   - **After adjusting the force or the limit of travel, retest the gate operator. Failure to adjust and retest the gate operator properly can increase the risk of damage, injury or death.**
9. **Gate operators and associated control equipment should be installed by qualified professional installers who should observe the following safe installation procedures:**
   - **Power should always be disconnected whenever installing, wiring or servicing a gate operator. Moving chains in gate operators can catch clothing or fingers and cause severe injury.**
   - **Installation of wiring should comply with local building and electrical codes.**
   - **All manual gate locks should be disabled to avoid damage to the gate or gate operator should the lock become engaged after the operator is installed.**
   - **All operator controls and safety equipment should be tested at the conclusion of installation to be sure they are functioning properly.**
   - **The operation of the gate controls and safety equipment should be reviewed with the owner and/or end user of the automated gate system. They should also be informed of the need to maintain control and safety equipment on a regular basis. Safety equipment should be checked monthly to ensure it is working properly. All installation manuals and safety information should be left with the owner.**
   - **Moving gates have pinch points and entrapment zones which can be extremely dangerous to pedestrians, especially small children.**

BASIC INSTALLATION HINTS AND RULES

READ THIS SECTION CAREFULLY BEFORE BEGINNING YOUR INSTALLATION.

1. ***UNDERSTAND THE SYSTEM AND INSTALLATION SITE THOROUGHLY.*** The SW2000 is a flexible and reliable gate operator system, but the quality of service depends directly on the quality of installation. Please read these instructions carefully and study the applicable diagrams before planning your installation. In particular, understand any site characteristics that may affect the system installation.

WARNING

2. ***INSTALL PERMANENT WIRING.*** UL specifications require the SW 2000 system to be permanently wired. Refer to your local wiring code for specific information.

   WARNING: Damage caused by faulty wiring is not covered by warranty.

3. ***U.L. OBSTRUCTION-SENSING REQUIREMENTS.*** To maximize safety, UL325 standards require primary obstruction sensing (gate sensitivity to impact) and secondary obstructions sensing (photo-sensors) be in operation at all times.

4. ***GROUND THE SYSTEM.*** The system contains parts which may be damaged by static discharge. A proper earth ground connected to the gate operator housing at the lower left grounding screw (see Figure 14) will significantly reduce the chances of damage or improper operation. The shielding in the cables specified for all remote sensors and controls should also be connected to earth ground at the controller end of the cable only.

   To be effective, the ground connection must be made by running 12 AWG copper wire to a good ground point (e.g., an electrical panel, a metallic cold water pipe that runs into the earth, or a grounding rod at least 10 feet in length that is driven into the earth) within 12 feet of the system Even if you have a good earth ground, you should try to discharge any static before handling the circuit boards.

   WARNING: Damage caused by static discharge and lightning is not covered by warranty.

5. ***PROVIDE POWER FROM A DEDICATED SOURCE.*** The outlet into which you connect the Gate Operator should be wired to its own circuit breaker. This will reduce the line noise introduced into system power and minimize the risk of having other equipment interrupt system operation. In a master/second system, master and second must each have separate circuits.

6. ***DO NOT OVERLOAD THE TERMINAL BLOCKS.*** The terminal blocks are removable and the pins are soldered into the boards. To connect your wires, remove the “head” from the correct terminals and open the screws. Insert the wire into the correct opening on the front and tighten the screw until the wire is held firmly. When you have made all connections for a given “head,” plug it back onto the pins designated for that terminal block.

   Stranded wire must be between 16 and 24 AWG. Solid wire must be between 18 and 24 AWG. This is the total thickness measurement so, if you are putting two wires in, the combined thickness must fall within this range. **NEVER** try to insert more than two wires per terminal.

7. ***ENSURE GOOD CONNECTIONS.*** A light tug on the wire will tell you if the connection is secure. When reconnecting system components, make sure all pins are straight on chips, connectors, and terminal block heads.

8. ***READ THE MARKINGS CAREFULLY.*** The connection points are marked on the boards clearly. Before making any connection, be sure to read the marking and check it against the corresponding figure in these instructions so that you understand the connection you are making.

9. ***TRAIN YOUR CUSTOMERS THOROUGHLY.*** Although customer responsibility is limited to proper installation, the quality of service is determined by the care of system setup. Ensure that the customer has a copy of this manual to guide them. It will save you and them a lot of inconvenience and aggravation later.

SITE PREPARATION

LOCATION AND LAYOUT

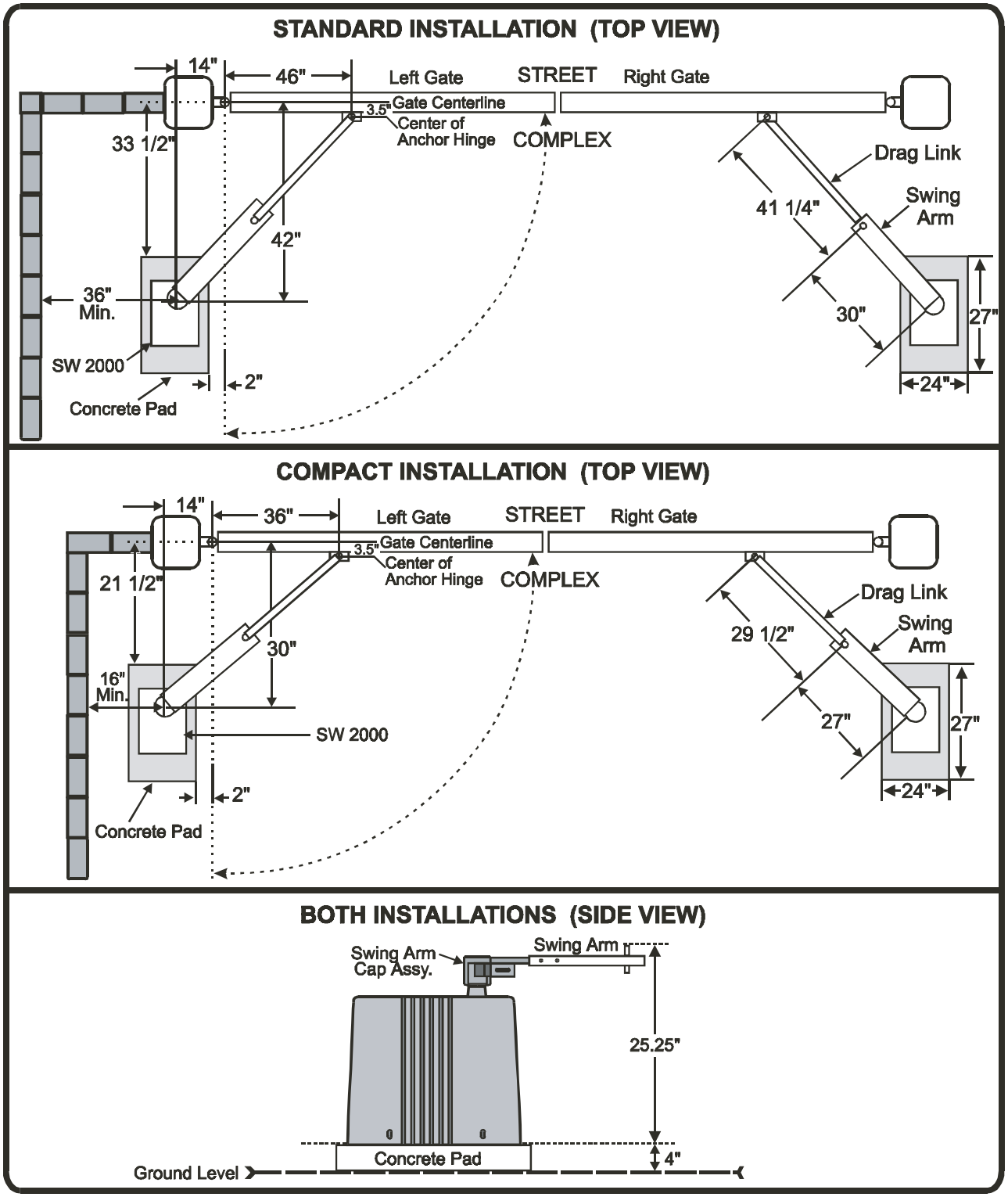

Figure 1. Gate Operator Layout Options

NOTES

- Left Gate and Right Gate are determined by looking from inside the complex toward the street.
- Figure 1 shows a typical Bi-Parting gate in standard and compact installations.

1. Always install gate operators inside of the fence line, NEVER on the public side of the fence.
2. Mount all manual controls and activating devices at least 6 ft. away from the gate for safety.
3. Allow enough clearance around the gate and the gate operator for installation and service.

PAD AND MOUNT

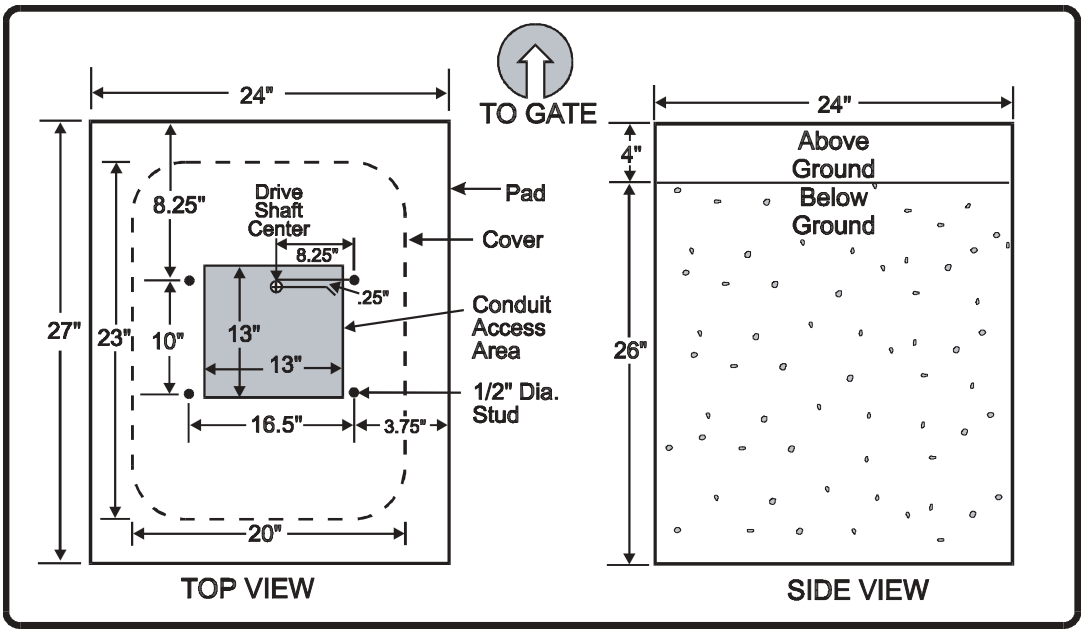

Figure 2. Pad and Mount

1. The concrete pad must be sufficient to support the gate operator and the dynamic forces created by the moving gate. LiftMaster recommends a pad 24" wide by 27" long by 30" deep.
2. The operator must be level and parallel to the gate, so the pad should be level and about 4" above grade to prevent water entrance.
3. Four anchor bolts are required to secure the gate operator to the pad. The mounting holes in the gate operator are 5/8" in diameter. Concrete anchoring bolts 1/2" x 3-1/2" are recommended.
4. Be sure to provide access for wiring conduits. In systems, remember to include conduit stubs for separate inputs (if any) and for the Master/Second connection cable between gate operators. For more information about Master/Second systems, see Master/Second Systems for B3 Series Gate Operators.

   NOTE: *Shading indicates conduit stub access areas .*

POWER WIRING

1. Provide a separate conduit stub for the AC power.
2. Each gate operator requires a 115 VAC 20 AMP single phase circuit

   NOTE: *Master and Second units each require separate circuits to prevent false overcurrent faults (see B3 Series Master/Second Systems).*
3. Wiring must comply with the local Electrical Code for operating a 1/2 HP motor. 12 AWG for up to 300' and 10 AWG for up to 500' long wire runs is suggested.
4. Be sure to pull a ground wire in the conduit for the connection to the gate operator.

   NOTE: *Do not rely on metallic conduit for earth ground.*

LOOP DETECTORS AND PHOTO-SENSORS

1. A shelf is provided (13” x 10” x 9” high) to support non-LiftMaster loop detector electronics.

   Power for the loop detector can come from the auxiliary 115 VAC plugs in the gate operator or from the 24 VAC provided by the gate operator control board.

   NOTE: *The auxiliary plugs have power regardless of the unit power switch setting.*
2. Conduit provisions should be made for the “loop” wire entrance to the loop detector.
3. Wiring should be 16-24 AWG stranded or 18-24 AWG solid.

NOTE: *Optional LiftMaster-supplied loop detector add-on boards are available, both pre-installed and for installation in the field. See Part 3, Gate Operator Model SW 2000-B3 Options.*

OTHER CONNECTIONS

1. Provisions should be made for conduit entrance into the gate operator for external activating devices such as key switches, telephone entry systems, loops, etc.
2. Wire size requirement: 16-24 AWG stranded or 18-24AWG solid wire should be used.

MASTER/SECOND INTERCONNECTION (MASTER/SECOND SYSTEM ONLY)

1. A conduit between the Master and Second units should be provided for the Master/Second interconnection cable.
2. Two shielded twisted pair wire 16-24 AWG will be connected between the two units at TB1 on the controller board.

NOTES:

1. *Do not run the Master/Second cable and AC power wires in the same conduit.*
2. *Master/Second interconnection cable should not exceed 3000 feet in length.*

GROUNDING

1. The system contains parts which may be damaged by static discharge. A proper earth ground connected to the gate operator housing will significantly reduce the chances of damage or improper operation. The shielding in the cables specified for all remote sensors and controls should also be connected to earth ground at the controller end of the cable only.
2. To be effective, the ground connection must be made by running 12 AWG copper wire to a good ground point (e.g., an electrical panel, a metallic cold water pipe that runs into the earth, or a grounding rod at least 10' in length that is driven into the earth) within 12' of the system. Even if you have a good earth ground, you should try to discharge any static before handling the boards.

GATE AND PHOTO-SENSOR LAYOUT

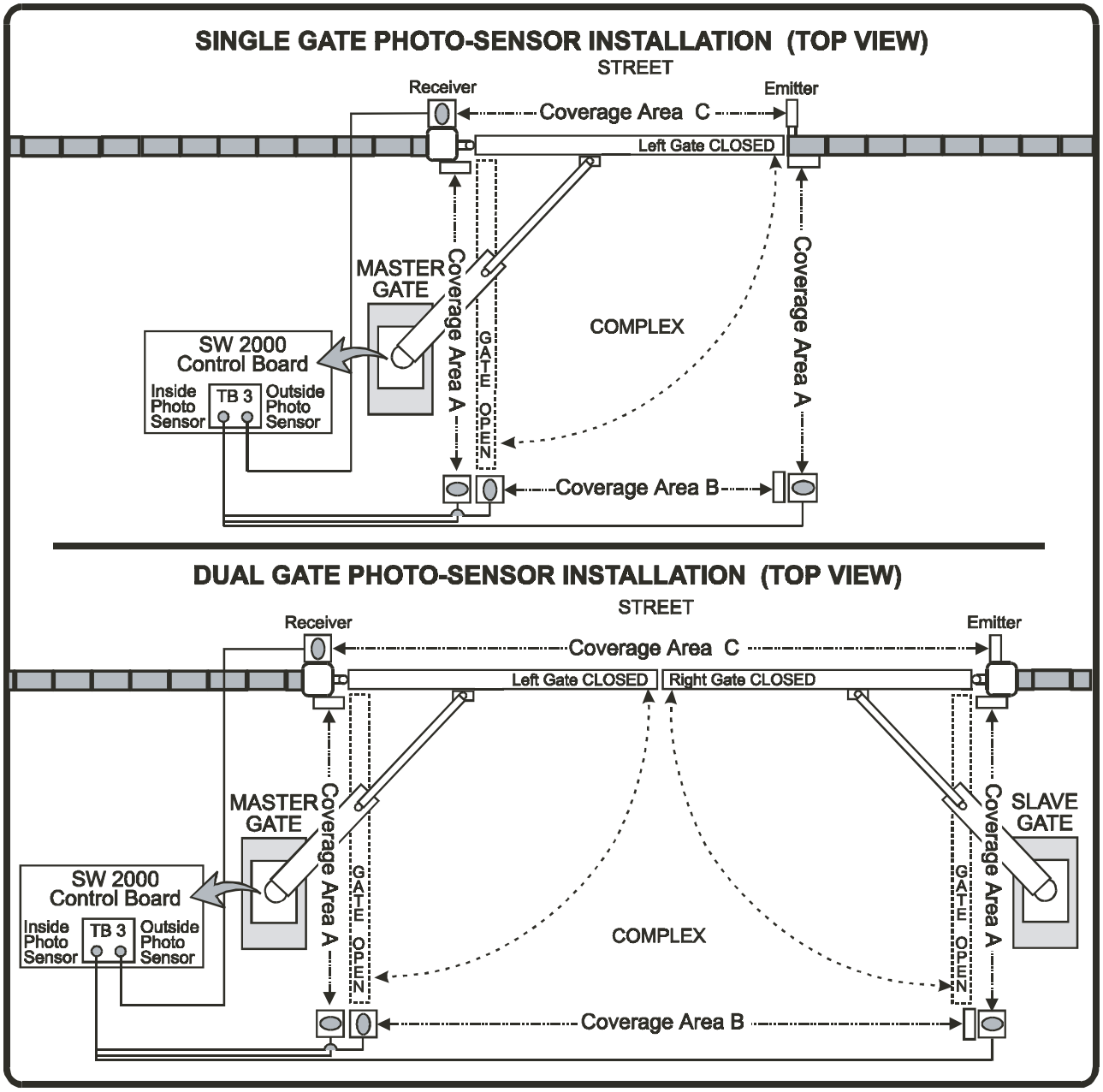

Figure 3. Photo-Sensor Layout

IMPORTANT NOTE

The installation shown in Figure 3 is a suggested layout using emitters and receivers. Any UL-approved photo-sensors are acceptable, **but they must cover the entire area of gate travel to be effective**.

1. Install photo-sensors in three **Coverage Areas** as shown in Figure 3.

   Coverage Area A - Inside-Open Coverage:
   Inside the gate, from the gate post(s) to the gate fully open position(s).

   Coverage Area B - Inside-Closed Coverage:
   Inside the gate, from the gate open position across full arc of gate travel.

   Coverage Area C - Outside-Closed Coverage:
   Single Gates: Outside the gate, from the gate post to the fence.
   Dual Gates: Outside the gate, from gate post to gate post.

2. For wiring instructions, see Connecting Power, below.

NOTE: *If you are installing a Master/Second system, refer to Series B3 Master/Second Systems for additional layout information.*

MOUNTING GATE OPERATOR

WARNING

To avoid injury, always turn off the unit power switch before working on gate.

1. Pull red release lever to disengage and remove quick disconnect arm cap from the output shaft (see Figure 7).
2. Remove 4 protective bolts holding the cover on, lift off the cover and set aside.
3. Remove the assembly kit and parts.
4. Remove the 4 bolts that attach the gate operator to the shipping pallet.
5. Mount gate operator on cement pad using the previously installed anchors. Be sure the operator is mounted level and square, with the control box facing away from the gate.
6. Connect the power conduit into the switch box.
7. Reinstall gate arm assembly onto output shaft/hub. Close red release lever until engagement pin fully seats into hub and ball plunger engages on handle. This may require slight side-to-side motion — HANDLE WILL CLOSE WHEN PIN IS PROPERLY ALIGNED — DO NOT FORCE SHUT.

CONNECTING POWER

CAUTION

Ensure that the AC power circuit breaker is turned off before wiring power to the switchbox.

Run power cables through the conduit to Gate Operator, then connect wires to the switch box as shown in Figure 4:

1. Wire nut the hot (black) wire to the black pig tail.
2. Wire nut the neutral (white) wire to the white pig tail.
3. Wire nut the ground (green) wire to the green pig tail.
4. Dress all wiring inside the switch box and install cover.

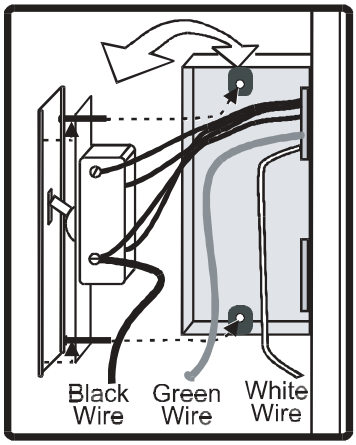

Figure 4. AC Wiring

RUNNING INPUT WIRING

WARNING

Route but do not connect input wires at this time. If inputs are connected now, the gate operator may activate at random during installation, potentially injuring installation personnel.

1. Remove the plastic control box cover.
2. Run wires from input component conduits and Master/Second conduits into control box.
3. For Master/Second wiring, refer to Master/Second Systems for B3 Series Gate Operators, Part 2.

SETTING GATE OPEN DIRECTION SWITCHES S2 AND S3

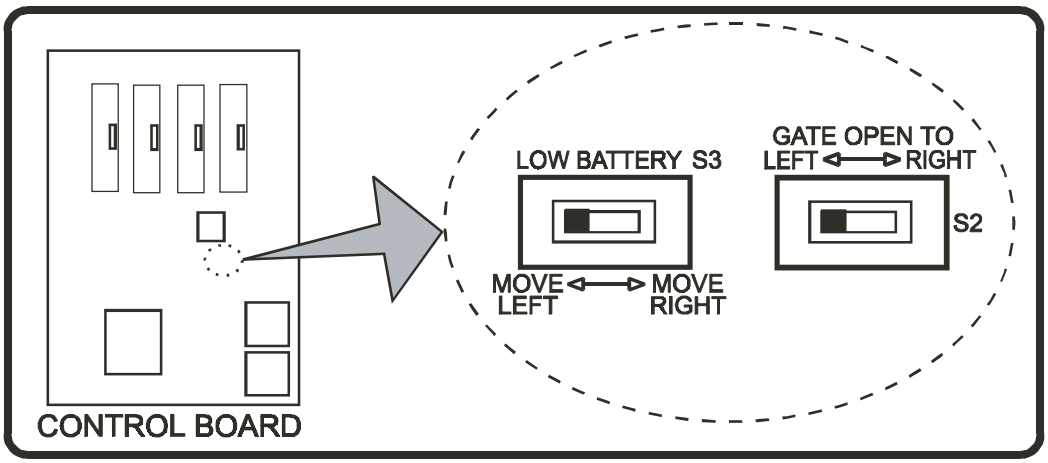

Figure 5. Gate Direction and UPS Low Battery Switch Locations

NOTE: *For swing gate operation, controls are Left/Clockwise and Right/Counterclockwise.*

- Switch S2 sets gate opening direction (open to left or open to right).
- Switch S2 is sensed only on power up, it should be set when the power is off, or power should be cycled after setting the switch.
  1. Set switch S2 to the Left for Clockwise Gate Opening, or to the Right for Counterclockwise Gate Opening as required.
  2. Set switch S3 to the direction you wish the gate to move (left or right) and remain when the LOW BATTERY input is activated by an Uninterruptible Power Supply (UPS).

POWER UP PROCEDURE

CAUTION

If gate is positioned at the 'open' limit, gate will automatically close if Reclose Timer is enabled and power is switched on. Position gate either at the closed limit or at no limit when preparing to switch power on. Always use extreme caution and follow all warnings in the Safety Summary.

1. Turn on circuit breaker that provides power to gate operator.
2. On Manual Input Terminal TB2, connect the STOP terminal to the COMMON terminal (see Figure 14).
3. Turn on gate operator power switch and verify that the row of LEDs on the right side of the controller board all turn on, then turn off sequentially, starting from the top. The only LEDs that should remain on are Power ON, MAGLOCK, and CLOSE LIMIT or OPEN LIMIT, if one of the limit switches are engaged.

   NOTE: *If the LEDs do not follow this pattern, the controller board may not be working correctly. Stop installation and call LiftMaster Technical Support for assistance.*
4. On Manual Input Terminal TB2, disconnect the STOP terminal from the COMMON terminal.

USING MANUAL CONTROLS

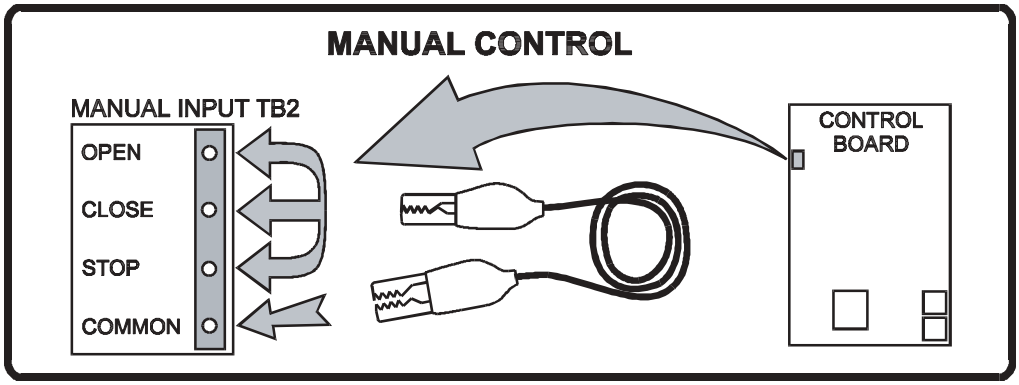

Figure 6. Manual Controls, Location and Use

If necessary, use the manual controls on Manual Input Terminal TB2 (OPEN, CLOSE, and STOP, as shown in Figure 6), to move the gate arm during system installation.

- **To open the gate:** connect the OPEN and STOP terminals to the COMMON terminal.
- **To close the gate:** connect the CLOSE and STOP terminals to the COMMON terminal.
- **To stop the gate:** disconnect the STOP terminal from the COMMON terminal.

IMPORTANT NOTE

If the STOP terminal is disconnected from the COMMON terminal, the gate is prevented from moving and no command will affect the gate.

GATE ARM INSTALLATION

NOTES:

1. *All dimensions are measured from one pivot point to the next pivot point.*
2. *The dimensions shown above are only recommended settings. Your installation may require different dimensions.*
3. *The SW2000-B3 can be installed without welding. The anchor, swing arm and drag link may be attached using the supplied hardware only, may be welded, or bolted and welded.*
4. *Paint or other anti-rust coating must be applied to the cut areas of the swing arm and/or drag link pipe to prevent rust.*

1. Attach gate anchor to gate by welding or using hardware (not supplied).
2. Using manual controls, move the swing arm cap assembly until it points roughly to the anchor. See Figure 7.
3. Measure and cut the swing arm to length. Attach swing arm to swing arm cap assembly with gate stop on driveway side, using supplied hardware or by welding.

   WARNING: Installing gate stop on the wrong side will cause damage to the gate operator.
4. Measure and cut Drag Link pipe to length, then insert spherical rod end assembly into pipe and tighten locking nut.
5. Attach welded end of Drag Link Assembly to Anchor and unwelded end to Swing Arm.

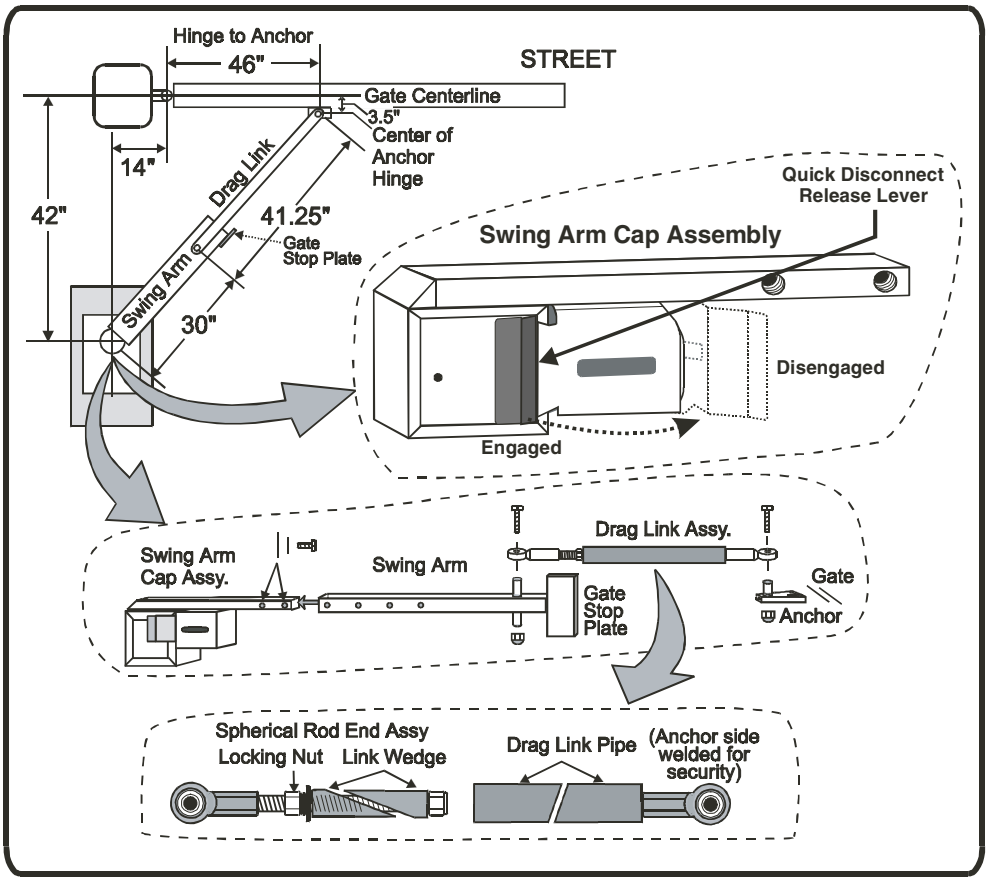

Figure 7. Gate Arm Installation

SETTING LIMIT CAMS

- Adjust the limit cams by loosening the clamp and rotating the cams. The cams rotate with the swing arm shaft, so small adjustments are magnified by the length of the gate.
- To avoid damage to the gate and gate operator due to the gate overrunning its limits, perform the following steps carefully:

1. SETTING RIGHT GATE LIMIT CAMS

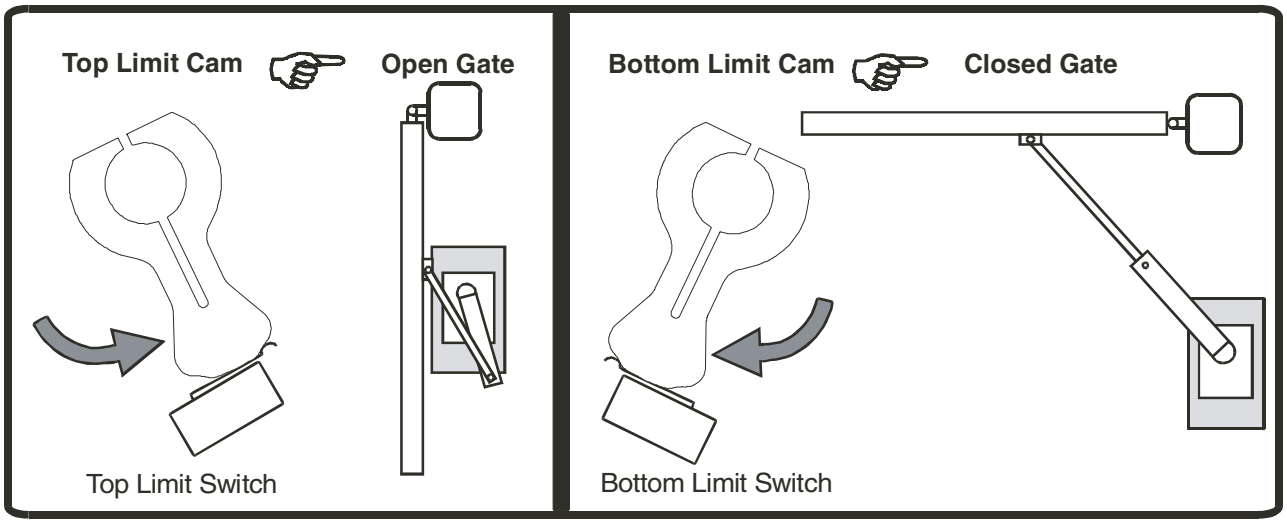

Figure 8. Setting Right Gate Limit Cam

1. Make sure that switch S2 is set to the “Right” position.
2. Turn on gate operator power switch.
3. Using manual CLOSE and STOP, move the gate to its proper closed limit position.
4. Loosen the clamp on the bottom limit cam and turn the cam clockwise until it just barely closes the limit switch.
5. Retighten the clamp. Do not overtighten.
6. Using manual OPEN and STOP, move the gate to its proper open limit position.
7. Loosen the clamp on the top limit cam and turn the cam counterclockwise until it just barely closes the limit switch.
8. Retighten the clamp. Do not overtighten.
9. Open and close the gate to check the limit cam settings. If required, readjust the limit cams until they are set properly.

2. SETTING LEFT GATE LIMIT CAMS

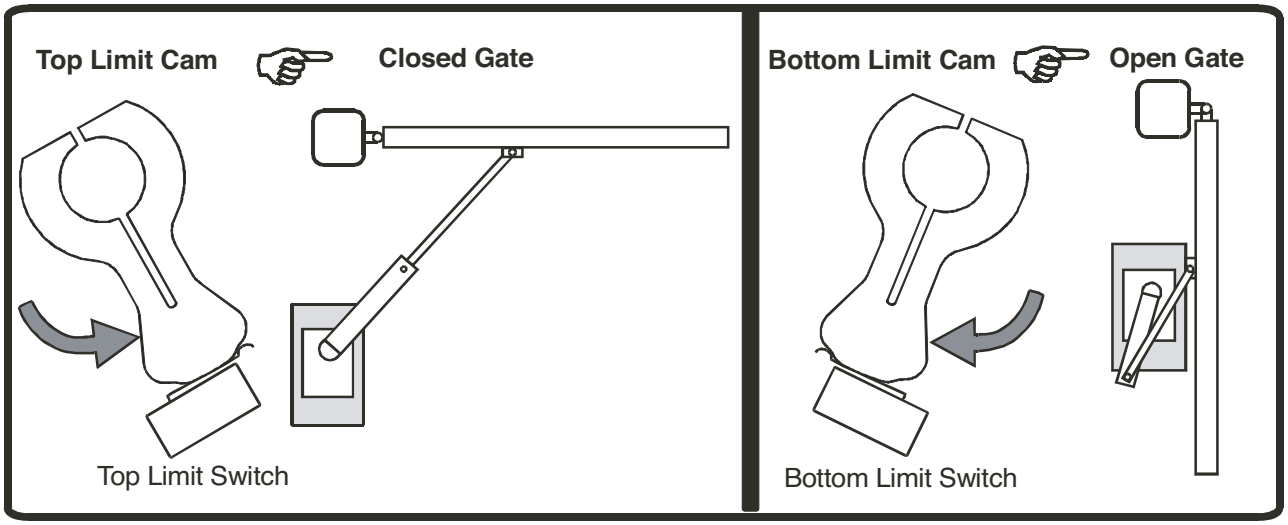

Figure 9. Setting Left Gate Limit Cam

1. Make sure that switch S2 is set to the “Left” position.
2. Turn on gate operator power switch.
3. Using manual OPEN and STOP, move the gate to its proper open limit position.
4. Loosen the clamp on the bottom limit cam and turn the cam clockwise until it just barely closes the limit switch.
5. Retighten the clamp. Do not overtighten.
6. Using manual CLOSE and STOP, move the gate to its proper closed limit position.
7. Loosen the clamp on the top limit cam and turn the cam counterclockwise until it just barely closes the limit switch.
8. Retighten the clamp. Do not overtighten.
9. Open and close the gate to check the limit cam settings. If required, readjust the limit cams until they are set properly.

GATE SENSITIVITY ADJUSTMENTS

The gate operator monitors both average and peak motor current. When the gate encounters an obstruction, the gate operator senses the change in motor current and reverses the gate. Three sensitivity adjustments must be set in the field:

- Right gate motion (R78)
- Left gate motion (R81)
- Start-up current (R119)

NOTE: *For swing gate operation, controls are Left/Clockwise and Right/Counterclockwise.*

- If your installation requires setting switch S2 the "Open to Right" position, use the "Open to Right" adjustment procedures below. If your installation requires setting S2 to the "Open to Left" position, use the "Open to Left" adjustments following the "Open to Right" procedures.
- The minimum sensitivity is full clockwise and maximum sensitivity is full counter clockwise. These adjustments must be made while the gate is in motion.
- Before starting the adjustments, verify that the Left and Right obstruction pots are set fully clockwise, and the Start-up pot is set to the 11 o'clock position (see Figure 10).
- Make all adjustments in the order listed.

NOTE: *Current flow varies with temperature. Do not tune the sensitivity measurements too finely, or they may cause false overcurrent faults to occur during cold weather.*

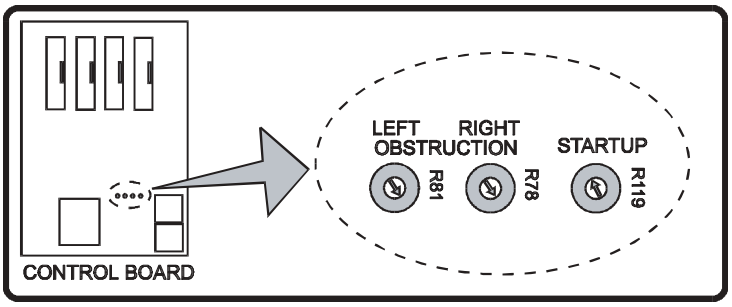

Figure 10. Gate Sensitivity Adjustments Location

"Open To Right" Adjustment Procedures

Right Gate Motion Adjustment (R78)

1. Initiate opening the gate.
2. Wait 4 to 5 seconds, then lightly "tug" against the edge of the gate to simulate an obstacle.
3. If the gate does not stop, reclose the gate and adjust the pot slightly counterclockwise.
4. Repeat steps 1-3 until the gate stops when tugged and has the desired sensitivity.

Left Gate Motion Adjustment (R81)

1. Open the gate fully, then initiate closing the gate.
2. Wait 4 to 5 seconds, then lightly "bump" the leading edge of the gate to simulate an obstacle.
3. If the gate does not stop or back up, reopen the gate and adjust the pot slightly counterclockwise.
4. Repeat steps 1-3 until the gate stops or backs up when bumped and has the desired sensitivity.

“Open To Left” Adjustment Procedures

Left Gate Motion Adjustment (R81)

1. Initiate opening the gate.
2. Wait 4 to 5 seconds, then lightly “tug” against the edge of the gate to simulate an obstacle.
3. If the gate does not stop, reclose the gate and adjust the pot slightly counterclockwise.
4. Repeat steps 1-3 until the gate stops when tugged and has the desired sensitivity.

Right Gate Motion Adjustment (R78)

1. Open the gate fully, then initiate closing the gate.
2. Wait 4 to 5 seconds, then lightly “bump” the leading edge of the gate to simulate an obstacle.
3. If the gate does not stop or back up, reopen the gate and adjust the pot slightly counterclockwise.
4. Repeat steps 1-3 until the gate stops or backs up when bumped and has the desired sensitivity.

Start-Up Current Adjustment (R119)

1. Turn the pot fully counterclockwise.
2. Initiate opening the gate.
3. If the gate stops due to a fault condition, slightly adjust the pot clockwise.
4. Repeat steps 2 and 3 until the gate cycles without a fault.
5. Open the gate fully, then initiate closing the gate.
6. If the gate stops or backs up due to a fault condition, slightly adjust the pot clockwise.
7. Repeat steps 6 and 7 until the gate cycles without a fault and has the desired sensitivity.

NOTE: *For complete details on controls, indicators, inputs, adjustments and connectors, see Appendix A.*

GATE CONTROL SWITCH (S1) OVERVIEW

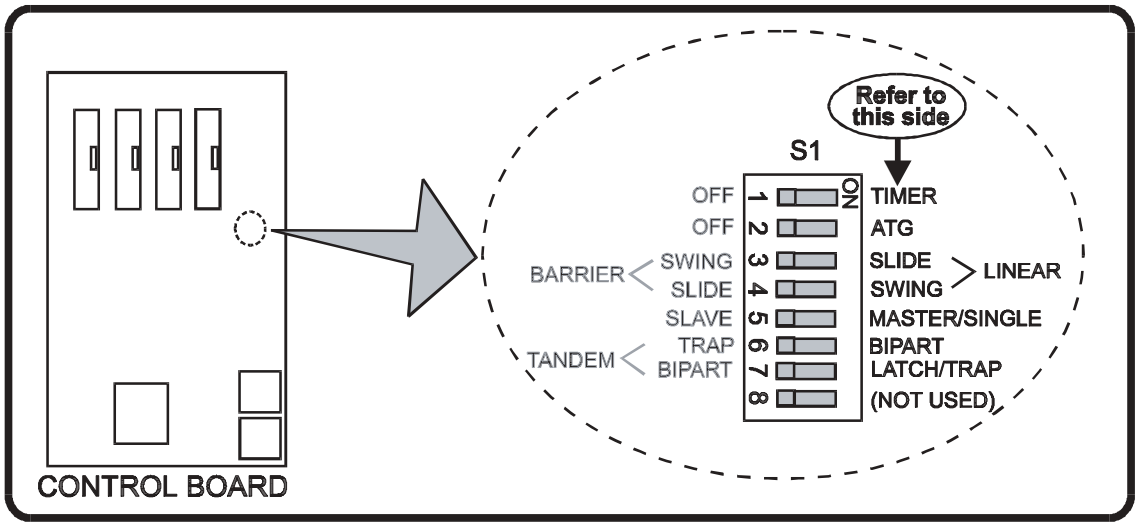

Figure 11. Gate Control Switch S1 Location and Details

TIMER (S1-1)	Sets the Reclose Timer to OFF (left) or ON (right). When enabled, the timer controls how long the gate waits at the open limit before closing. The Reclose Timer can be set from 0 to 250 seconds by adjusting the Reclose Timer pot (R94). During a power outage, if the gate is fully open and TIMER is ON, **the Reclose Timer starts after the restoration of power**, causing the fully open gate to close automatically.
ATG (S1-2)	Sets Anti-Tailgate function to OFF (left) or ON (right). The Anti-Tailgate feature helps prevent two cars from entering on one OPEN command. See Paragraph 2 below for setting instructions. **ATG is not functional with swing gates.**
SLIDE (S1-3)	Use this switch with S1-4 to configure the gate type. To set the gate to SWING, set switch to OFF (left).
SWING (S1-4)	Use this switch with S1-3 to configure the gate type. To set the gate to SWING, set switch to ON (right).
MASTER/SINGLE (S1-5)	Set in conjunction with S1-6 and S1-7, configures the gate operator for master/second operation. For settings, see B3 Series Master/Second Systems.
BIPART (S1-6)	Set in conjunction with S1-5 and S1-7, configures the gate operator for master/second operation. For settings, see B3 Series Master/Second Systems.
LATCH/TRAP (S1-7)	Set in conjunction with S1-5 and S1-6, configures the gate operator for master/second operation. For settings, see B3 Series Master/Second Systems.
(NOT USED) (S1-7)	This switch is not used.

1. SETTING RECLOSE TIMER SWITCH (S1-1) AND POT (R94)

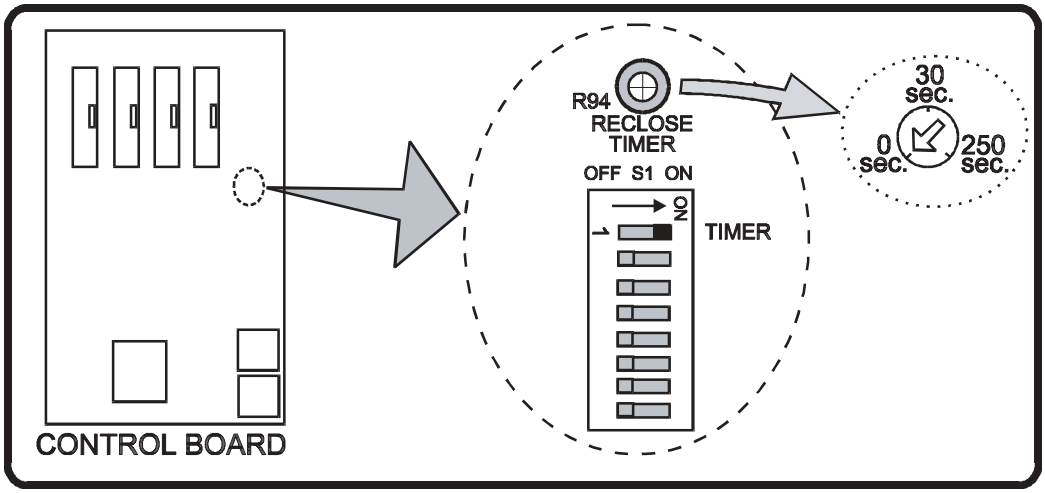

Figure 12. Reclose Timer Enable and Adjustment Location

The Reclose Timer pot (R94) is adjustable from 0 to 250 seconds. Turning the pot clockwise increases the reclose time.***NOTE***: *Pot in Figure 12 is set to 0 seconds.*

1. To enable the Timer, set switch S1-1 (TIMER) to ON (right).
2. Turn the pot fully counterclockwise.
3. Open the gate. Gate should close almost immediately when it reaches the open limit.
4. Adjust the pot slightly clockwise.
5. Open the gate. Note delay between gate reaching its open limit and starting to close.
6. Repeat steps 4 and 5 until the desired reclose time is set.

2. SETTING GATE TYPE TO SWING (SWITCHES S1-3 AND S1-4)

1. Set switch S1-3 (SLIDE) to OFF (left).
2. Set switch S1-4 (SWING) to ON (right).

3. SETTING MASTER/SINGLE GATE (SWITCH S1-5)

- For a **single** gate, set switch S1-5 (MASTER/SINGLE) to ON (right).
- For a **master/second** gates:
  1. **Master:** Set switch S1-5 (MASTER/SINGLE) to ON (right).
  2. **Second:** Set switch S1-5 (MASTER/SINGLE) to OFF (left)
  3. See B3 Series Master/Second Systems for further instructions.

CONNECTING INPUT WIRING

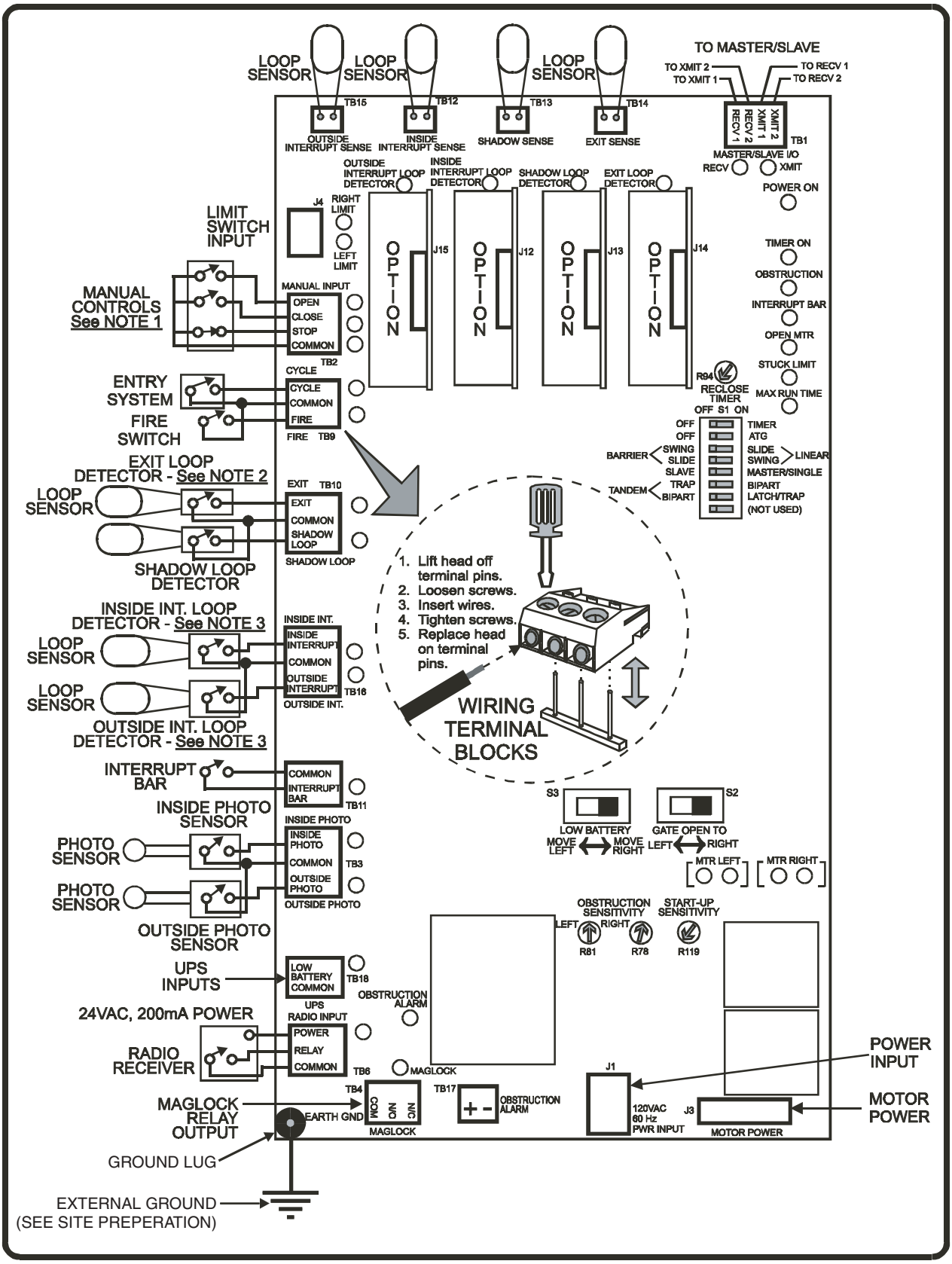

Figure 13. Control Board Wiring

IMPORTANT: Before proceeding, see NOTES below.

1. Wire all external control devices to their connections on the control board as shown. See Appendix A for details on how each control input affects the gate operator.
2. Connect the Master/Second interconnect cable (see Master/Second Systems for B3 Series Operators).

NOTES:

1. *Disconnecting the STOP terminal from the COMMON terminal stops the gate and prevents all commands from having any effect. Manual Open does not activate the Reclose Timer.*

   IMPORTANT: *As per UL325 standards, install Manual Input and Fire switches in the line of sight with the gate.*
2. *If gate(s) are used for bi-directional traffic, the Exit Loop should be a directional loop detector.*
3. *Inside and Outside Interrupt Loops:*
   - *For maximum safety, Inside and Outside Interrupt loops require separate loop detectors.*
   - ***Bipart or Bipart Latch:*** *If only one loop detector is used, the Outside loop must also be connected to the Inside loop detector.*

POST INSTALLATION PROCEDURES

1. SETUP

1. Turn on the main power at the gate operator's circuit breaker.
2. Verify that switch S2 (Gate Open Direction switch) is set to the correct position.
3. Turn on the unit power switch.

2. MANUAL INPUTS

1. Verify that Manual Open fully opens the gate and that the open limit switch stops the gate.
2. Verify that Manual Close fully closes the gate and that the close limit switch stops the gate.
3. Verify that Manual Stop stops the gate.

NOTE: *If the gate stops due to an Obstruction Fault (motor overcurrent) readjust the gate sensitivity pot.*

3. MECHANICAL

Use the Manual Input commands to verify that:

1. The gate swings open and closed smoothly.
2. There is no squeak or vibration in the gate when it is moving.
3. There is no belt slippage when the gate moves or stops.
4. There is no slack in the closed gate due to loose chain or parts.
5. **Bi-Parting Gates Only:** Both gates open and close at the same time.

4. GATE SENSITIVITY AND OBSTRUCTION ALARM (PRIMARY OBSTRUCTION SENSING PER UL325 REQUIREMENTS)

1. **Left/Right Obstruction sensitivity:**
   Apply a bump to the opening and closing gate and verify that the gate stops or reverses.
2. **Start-up (Gate response time at start-up):**
   Apply a bump to the gate as it initiates opening and closing and verify that the gate responds to the bump within a second.
3. **Obstruction Alarm:**
   Cause two obstruction faults before the gate reaches its open or closed limit and verify that the Obstruction Alarm sounds.

5. ENTRY INPUTS

1. Activate the CYCLE input (entry system), RADIO input (radio transmitter), and EXIT Loop input (driving over the exit loop) and verify that they fully open the gate. If Reclose Timer is enabled, it will close the gate.
2. Activate the FIRE input (fire department switch) and verify that the gate fully opens and then closes immediately. If Reclose Timer is ON, it will close the gate.

6. ALTERNATE ACTION

1. If you want the CYCLE input (Entry system) or RADIO input (Transmitter) to both open and close the gate, on switch S1 set TIMER to OFF and ATG to OFF.
2. Activate the CYCLE command, wait until the gate is fully open, then activate the CYCLE command again. The gate should close, verifying Alternate Action operation.

NOTE: *If you select Alternate Action, you cannot use ATG = ON and TIMER = ON in procedures 7 and 8 that follow.*

7. RECLOSE TIMER

If TIMER switch S1-1 has been set to ON and Reclose Timer pot R94 has been adjusted, verify Reclose Timer action as follows:

1. Activate any entry command (except Manual OPEN) to open the gate.
2. Start timing when the gate reaches fully open and verify that the Reclose Timer recloses the gate after the desired interval.

NOTE: *Reclose Timer is not functional when the Manual OPEN command is used.*

8. INSIDE INTERRUPT LOOP AND ANTI-TAILGATING (ATG) WHEN EXITING

Gate Type is SWING

When a vehicle drives on the Inside Interrupt loop, a moving gate will stop, but will open as soon as vehicle drives off the Interrupt loop.

When a vehicle drives on the Outside Interrupt loop an opening gate will be unaffected but a closing gate will open.

NOTE: *ATG is non-operational with SWING GATE TYPE.*

9. SHADOW LOOP

1. Ensure the gate is fully closed (the close limit switch and Maglock LEDs will be ON).
2. Park a car, while it is running, on the Shadow Loop but clear of the Safety Loop.
3. Activate a Cycle command and verify that the gate does not open

CAUTION: ***If the gate begins to open, move the car immediately.***

4. Remove the car from the Shadow Loop and verify that a Cycle command opens the gate.

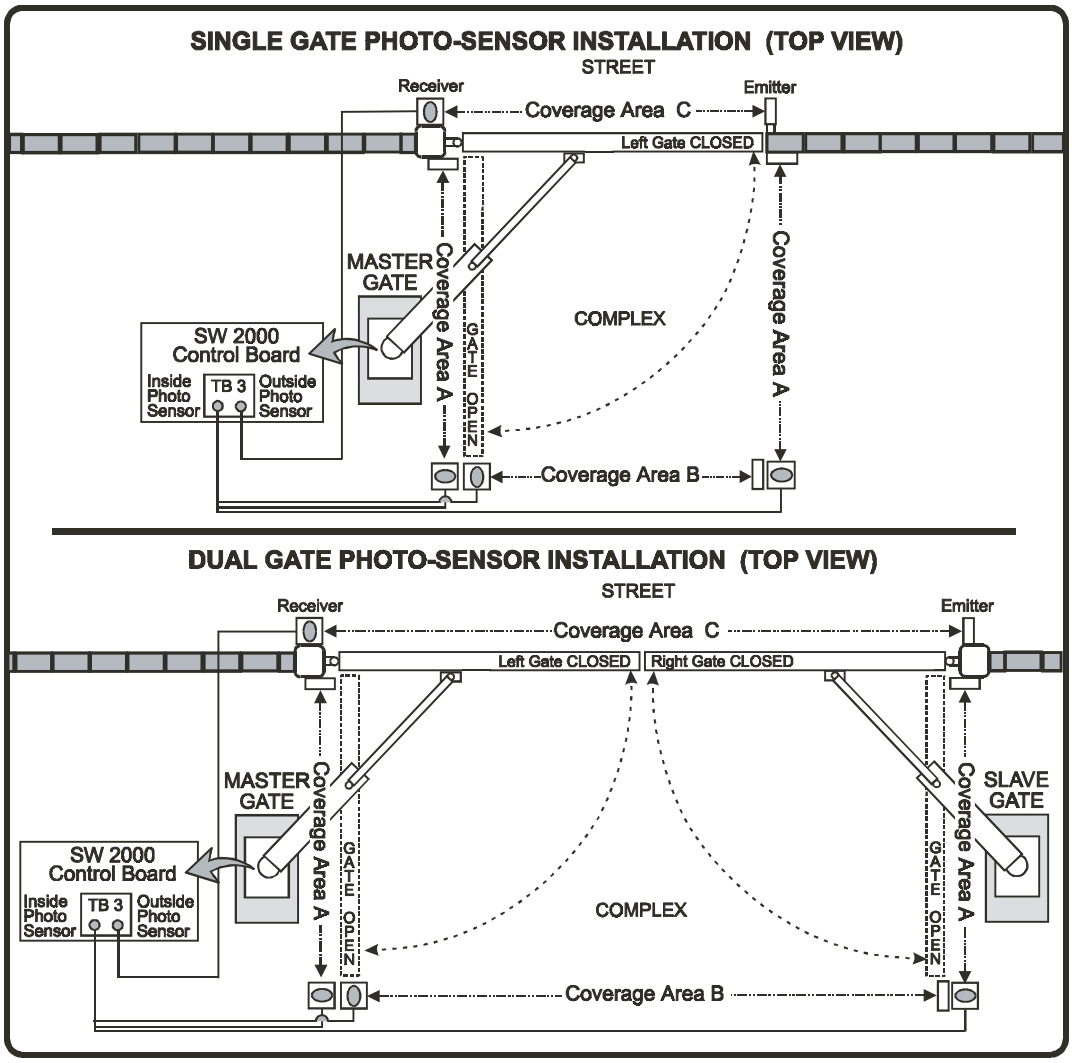

Figure 14. Photo-Sensor Coverage Areas

10. PHOTO-SENSORS (SECONDARY OBSTRUCTION SENSING PER UL325 REQUIREMENTS)

Coverage Area A:
While the gate is opening or closing, put your hand or arm through the Inside Photo-Sensor beam. The gate should stop. The gate should restart when the obstruction (your hand) is removed.

Coverage Area B:
Stand inside the fence line. While the gate is opening or closing, put your hand or arm through the Outside Photo-Sensor beam. The gate should stop. The gate should restart when the obstruction (your hand) is removed.

Coverage Area C:
Stand outside the fence line. While the gate is closing, put your hand or arm through the Outside Photo-Sensor beam. The gate should stop. The gate should restart when the obstruction (your hand) is removed.

11. INTERRUPT BAR (EDGE SENSOR)

While the gate is opening, push on the Interrupt Bar (Edge Sensor). The gate should stop and reverse a few inches.

12. MAGLOCK

Verify that the Maglock activates when the gate is fully closed.

FINAL ASSEMBLY OF GATE OPERATOR

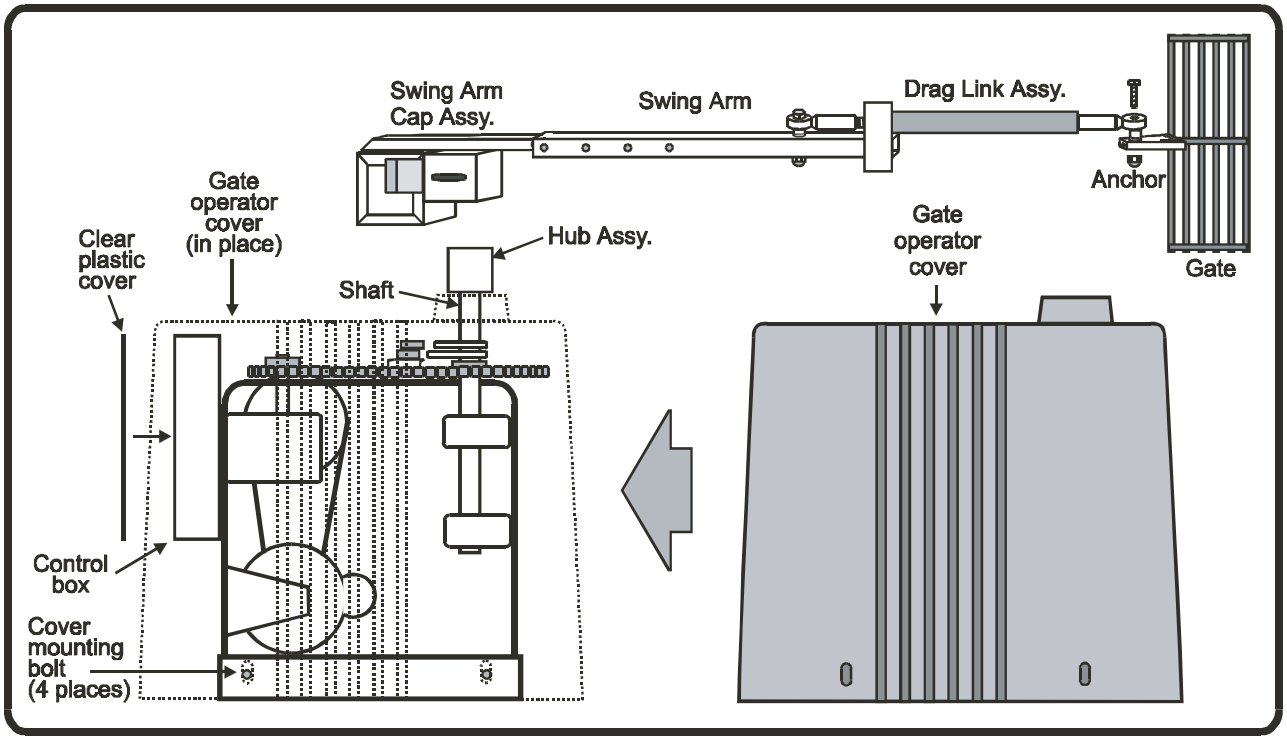

Figure 15. Gate Operator Final Assembly

IMPORTANT SAFETY PROCEDURE

1. Turn off power to the gate operator at the circuit breaker.

• Refer to Figure 15, above, to perform the following instructions.

2. Disconnect Drag Link from Anchor. Then disengage quick disconnect by pulling the release lever on the Swing Arm Cap Assembly. Remove Swing Arm Cap Assembly and Drag Link Assembly from drive shaft. Set this assembly aside.
3. Install clear cover on gate operator control box.
4. Make sure that gate operator unit power switch is turned on.
5. Install gate operator cover and secure with four bolts.
6. Replace Swing Arm Cap Assembly and Drag Link Assembly on drive shaft, then reconnect Drag Link to gate Anchor.
7. Reinstall gate arm assembly onto output shaft/hub. Close red release lever until engagement pin fully seats into hub and ball plunger engages on handle. This may require slight side-to-side motion - HANDLE WILL CLOSE WHEN PIN IS PROPERLY ALIGNED - DO NOT FORCE SHUT.
8. Turn on power to the gate operator at the circuit breaker.
9. Cycle the gate to ensure it is operating properly.

SET SECURITY MODE

The Universal Receiver can be used with up to 15 rolling code transmitters or passwords in HIGH security mode. Alternately, it can be used with up to 31 of any type transmitter in NORMAL security mode, including any combination of rolling code, billion code, or dip switch remotes.

The jumper must be set at the HIGH position for the receiver to operate in HIGH security mode. It must be set at NORMAL position to operate at the NORMAL mode. *(Figure 16)*

When changing from NORMAL to HIGH security mode, any previous transmitter codes must be erased. Repeat Steps 2 and 3 in the Programming Section below to reprogram the receiver for each remote control transmitter in use.

The receiver is factory set at HIGH.

SET OUTPUT DURATION

⚠ WARNING

To prevent possible SERIOUS INJURY or DEATH, the use of CONSTANT OPERATION on residential openers is PROHIBITED.

For commercial applications, the receiver can be set for either constant or momentary closure on the output contacts. Use of constant closure is prohibited on residential garage door openers because it overrides the safety reversal devices.

With the jumper in the “M” (Momentary) position, the contacts will close for 1/4 second regardless of the length of radio transmission. With the jumper in “C” (Constant) position, the contacts will stay closed as long as the radio continues transmitting. *(Figure 17)*

The receiver is factory set at M.

PROGRAMMING THE REMOTE TO THE RECEIVER

1. Pry open the front panel of receiver case with a coin or a screwdriver. Re-connect power to opener. *(Figure 18)*
2. Press and release the “learn” button on the receiver. The learn indicator light will glow steadily for 30 seconds.
3. Within 30 seconds, press and hold the button on the hand-held remote that you wish to operate your garage door.

The opener will now operate when the push button on either the receiver or the remote control transmitter is pressed.

Repeat Steps 2 and 3 for each remote control that will be used to operate the garage door opener.

TO ERASE ALL REMOTE CONTROL CODES

Press and hold the “learn” button on the receiver panel until the indicator light turns off (about 6 seconds). All transmitter codes are now erased. Then follow the steps above to reprogram each remote control.

⚠⚠ WARNING

To prevent possible SERIOUS INJURY or DEATH from electrocution:

- Be sure power is not connected BEFORE installing the receiver.

To prevent possible SERIOUS INJURY or DEATH from a moving gate or garage door:

- ALWAYS keep remote controls out of reach of children. NEVER permit children to operate, or play with remote control transmitters.
- Activate gate or door ONLY when it can be seen clearly, is properly adjusted, and there are no obstructions to door travel.
- ALWAYS keep gate or garage door in sight until completely closed. NEVER permit anyone to cross path of moving gate or door.

NOTICE: To comply with FCC and or Industry Canada (IC) rules, adjustment or modifications of this receiver and/or transmitter are prohibited, except for changing the code setting or replacing the battery. THERE ARE NO OTHER USER SERVICEABLE PARTS.

Tested to Comply with FCC Standards FOR HOME OR OFFICE USE. Operation is subject to the following two conditions: (1) this device may not cause harmful interference, and (2) this device must accept any interference received, including interference that may cause undesired operation.

Figure 16

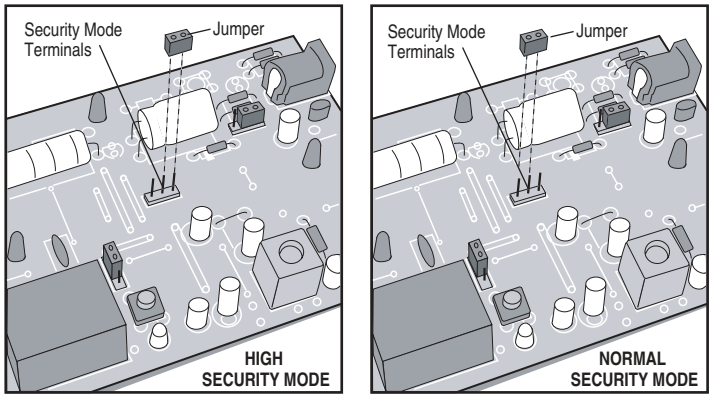

Figure 17

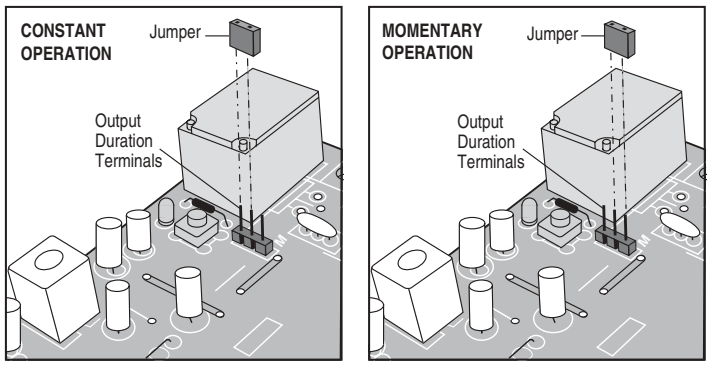

Figure 18

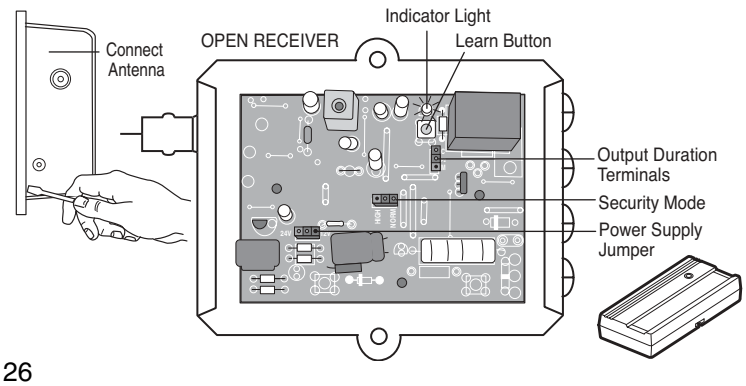

LIFTMASTER LOOP DETECTOR BOARDS (OPTIONAL)

The model SW2000-B3 gate operator has connectors for four LiftMaster-supplied loop detector add-on boards. These boards simply plug into the control board and interface with Interrupt, Shadow and Exit loop sensors. The add-on boards can be ordered pre-installed, or can be installed in existing model SW2000-B3 units.

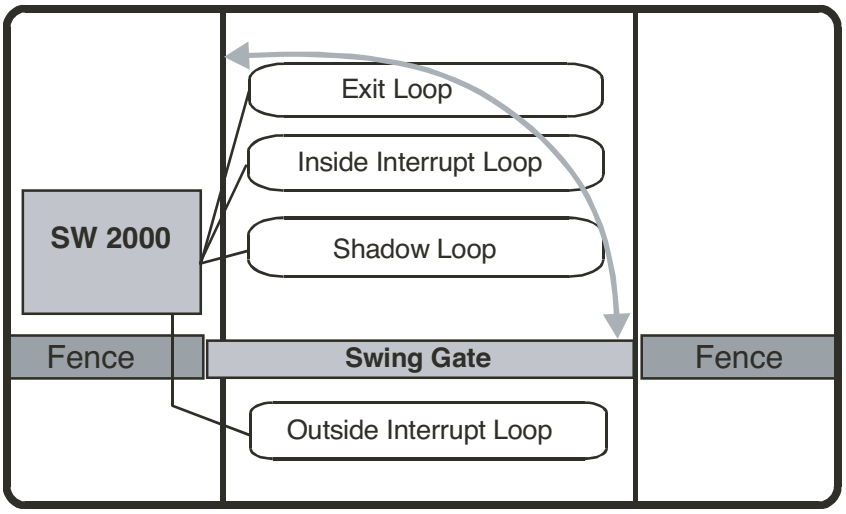

Figure 19. Typical Swing Gate Loop Detector Configuration

TROUBLESHOOTING AND MAINTENANCE

TROUBLESHOOTING

This section is designed to help you troubleshoot your unit(s). Below are some hints to help:

- Test the Operator
- Quick Reference List of Faults and Methods to Resolve
- Quick Reference List of Faults and Causes

Testing Control Board inputs: To test an input, connect the input terminal to the COMMON terminal on the Control Board and verify that its LED turns on momentarily. Normally, the Close limit switch and Maglock LEDs are on if the gate is fully closed, and Open limit switch and Reclose Timer LEDs are on if the gate is fully open. The Power ON and Manual STOP LEDs are always on.

Low input AC voltage: The voltage across connector J1 pins 1 (red wire) and 3 (white wire) on the Control Board must measure 100VAC to 130VAC.

CAUTION HIGH VOLTAGE. Measure with care.

Fault Causes: Refer to the end of trouble shooting section.

1. OPERATOR IS DEAD

When the unit power switch is cycled, no LED turns on.

1. The main circuit breaker is off.
2. The unit power switch is off.
3. The input power connector is not connected securely to the Control Board.
4. Low input AC voltage.
5. Bad Control Board.

2. OPERATOR DOES NOT RUN

When the unit power switch is cycled, LEDs blink simultaneously or turn on randomly:

1. Low input AC voltage.
2. The processor was installed improperly into Control Board by the installer.
3. Bad Control Board.

When the unit power switch is cycled, all LEDs turn on and off (except Power On) at the same time:

1. On Manual Input Terminal TB2, the STOP terminal is disconnected from the COMMON terminal.
2. An input is continuously activated (Stuck).
3. Low input AC voltage.
4. Bad Control Board.

When the unit power switch is cycled, all LEDs (except Power On) turn on at the same time and off one after another with the bottom LED turning off first (normal power up).

1. An input is continuously activated (stuck).
2. Both limit switches are stuck closed.
3. Stalled motor.

3. MOTOR DOES NOT RUN

Motor is dead:

1. A Photo-Sensor Fault has occurred. Ensure gate pathways are clear, then recycle gate.
2. The resettable motor thermal overload switch has popped. Reset and cycle gate power.
3. The interconnecting cable between the motor and the control board is disconnected.
4. Bad control board.
5. Bad motor.

Motor is stalled:

1. Frozen motor, gearbox or gate.
2. V-belt is too tight.

4. THE CONTROL BOARD RESETS RIGHT AFTER GATE STARTS MOVING

1. Low input AC voltage.
2. Inadequate and undersized power wiring between the main circuit breaker and the gate operator.

5. GATE STOPS IMMEDIATELY AFTER IT STARTS

1. A Fault has occurred.

Mostly in cold weather or mornings:

2. A Fault has occurred; Start-up pot adjustment is set too low.

6. GATE STOPS AND REVERSES A FEW SECONDS AFTER IT STARTS

1. Stuck limit switch.
2. A Fault has occurred.

7. GATE SUDDENLY REVERSES WHILE MOVING

A Fault has occurred.

8. OPENING GATE STOPS WHEN A VEHICLE APPROACHES FROM INSIDE

Setting the Gate Type to SWING or LINEAR, causes Interrupt loops or photo-sensors to stop the gate when a vehicle approaches from the inside. For safety reasons, the gate normally operates this way.

9. GATE OPENS BUT DOES NOT CLOSE

1. Switch S1-1 (TIMER) is OFF.
2. One of the inputs is continuously activated (a stuck input).
3. Entry system input is connected to Manual Open input.

10. GATE DOES NOT STOP AT THE LIMIT

1. Limit cams are out off adjustments.
2. Limit switch cable is disconnected either from the control board or the limit switches.
3. Bad limit switch.

11. GATE IS TOO SLOW

1. Low input AC voltage
2. Hardened or frozen gate hinges.
3. Slipping belt.

12. GATE DOES NOT STAY OPEN WHEN USING FIRE INPUT

Fire was only activated momentarily-not continuously.

13. GATE DOES NOT CLOSE AUTOMATICALLY

1. Switch S1-1 (TIMER) is OFF.
2. The entry system is connected to Manual Open input.
3. An input is continuously activated (stuck).

14. ALTERNATE ACTION DOES NOT WORK

1. ATG and Reclose Timer are both set to ON.
2. Entry system is connected to the Manual Open Input.

15. GATE DOES NOT OPEN TO THE CORRECT DIRECTION

The power was not cycled after changing the setting of switch S2.

16. INTERRUPT LOOP DOES NOT ACT PROPERLY

1. Improper Gate Type setting on Switch S1.
2. Bad loop sensor or loop detector.
3. Bad connection between the loop sensor, loop detector and the Control Board.

17. THERE IS SLACK OR PLAY IN THE GATE

1. Chain is too loose.
2. The hardware interconnecting the operator to the gate is not tight.
3. The large mounting bolt or the jam nut for the cap arm is not tight.
4. Set screws on the sprocket are not tight.

18. ATG (ANTI-TAILGATE) DOES NOT WORK

For safety reasons, ATG is not functional with Gate Types SWING and LINEAR.

19. SHADOW LOOP IS INEFFECTIVE

1. The gate is not at either the open or close limit
2. Bad loop sensor or loop detector.
3. Bad connection between the loop sensor, loop detector and the Control Board.

20. MAGLOCK DOES NOT WORK

1. Bad connection between Maglock, its power supply and the Control Board.
2. Bad Control Board (relay on the Control Board does not close).
3. Bad Maglock or Maglock power supply.
4. Large gap between gates.

21. MASTER/SECOND SYSTEM

Units work as stand-alone:

1. Miswired or disconnected Master/Second interconnect cable.
2. Improper Master/Second switch S1 setting.
3. Bad control board.

Units are not synchronized:

Improper switch S1 Master/Second settings.

One gate braking to stop causes a fault in the other (moving) gate:

1. Both units are wired to the same circuit breaker.
2. Undersized power wires.

FAULT LIST

The following conditions can cause a fault:

1. Instantaneous motor overcurrent (left/right obstruction sense) due to an object physically obstructing the gate or gate track (UL325 requirement).
2. Average motor overcurrent (overload) caused by excessive motor current (UL325 requirement.
3. Interrupt Bar activation (edge sensor) due to physical contact with the edge sensor.
4. Inoperative motor caused by an open motor winding, broken or disconnected input motor wires, thermal overload, or unsupervised motor (UL325 requirement).
5. Limit switch staying closed when gate is supposed to move, caused by a broken V-belt, defective limit switch, or defective limit cams.
6. Maximum motor run time exceeding 75 seconds.
   A. If faults 1 through 3 occur only once during opening or closing, the gate reverses a few inches and stops. Fault may be cleared by removing the obstruction and cycling any command (Manual Inputs, FIRE, Cycle, Radio, EXIT).
   B. If two sequential faults (a combination of faults 1 through 3 and Photo-Sensor activation) occur during opening or closing, gate stops and Obstruction Alarm sounds off for 5 minutes. Fault may be cleared by removing the obstruction and cycling Manual Inputs or FIRE.
   C. If fault 4 occurs, gate stops and Obstruction Alarm sounds off for 5 minutes. Fault may be cleared by cycling Manual Inputs or FIRE.
   D. If faults 5 through 6 occur, gate stops. Fault may be cleared by cycling any command.

FAULTS AND THEIR CAUSES

1. IF OBSTRUCTION LED IS ON

1. The gate is blocked by an object.
2. OBSTRUCTION or STARTUP adjustment is set too low.
3. Cold weather: frozen motor or frozen gate wheels.
4. The Maglock does not disengage from the gate at the start of gate opening.
5. A sudden increase in input power.
6. Bad Control board.
7. Belt is too tight.

2. IF INTERRUPT BAR LED IS TURNED ON

Edge Sensor is activated. Clear obstruction and cycle the gate.

3. IF OPEN MOTOR LED IS TURNED ON

1. The motor thermal overload switch is popped.
2. The wires connecting the motor to the Control Board are disconnected.
3. Bad motor.
4. Bad Control Board.

4. IF STUCK-LIMIT LED IS TURNED ON

1. A limit switch is stuck closed.
2. The belt was broken before the start of the gate movement.
3. Stalled motor at open or close limit.
4. Bad limit switch.

5. IF MAX RUN TIME LED IS TURNED ON

1. Limit cams do not engage the limit switches.
2. The belt or chain has been broken.
3. The belt slips during gate movement.
4. Limit switch cable is disconnected.
5. Bad limit switch.
6. Stalled motor.

MAINTENANCE

WARNING

To avoid injury, always turn off the unit power switch before working on gate.

Regular performance of preventive maintenance is essential for reliable system operation because it corrects small problems before they turn into emergencies. LiftMaster recommends performing preventive maintenance every 6 to 12 months, depending upon the amount of gate usage.

- If the gate is installed in a private residence or small apartment house where usage is not severe, yearly preventive maintenance is acceptable.
- If the gate is installed in a high-traffic application, semi-annual preventive maintenance is essential.

PREVENTIVE MAINTENANCE TASKS

1. **Gate Arm:** Check for wear in the moving parts. Check for hardware tightness.
2. **Gate:** Must swing freely without any impediment. Check hinges and grease, if necessary.
3. **Chain:** Check for wear and tension. If loose, adjust tension with chain tensioner. Do not oil chain.
4. **Sprocket:** Must not be loose in the shaft. Tighten set screws if loose.*
5. **Limit Switches:** Contacts must bounce back rapidly when they are pressed and released.
6. **Belt:** Check for wear and tension (25 to 30 lbs.). Adjust the AC motor up or down to set proper tension.
7. **Pulleys:** Must all line up and be firmly secured to their shafts. Tighten set screws if loose.*
8. **Gear Box:** Check for no oil leakage around the bushings. Do not oil gearbox.
9. **Control Board:** Check for water damage or burned spots. All connectors secured to the board.
10. **Wiring:** Check all wiring for any insulation damage. Check for loose wire connections.
11. **No Rust:** Check for rust throughout the unit. Check corners for water entrapment.
12. **Fire Open:** Activate Fire department switch to verify emergency gate opening.
13. **Gate Sense:** Check for the gate sensitivity (refer to Part 2, System Installation, Gate Sensitivity Adjustments).
14. **Photo-Sensors:** Ensure that emitters/receivers are aligned and clean. Verify that inputs stop gate.
15. **Obstruction Alarm:** Check for proper operation. Alarm must sound after two consecutive gate obstruction faults.

***NOTE:** *To prevent loosening, two set screws are used in each hole and Loctite threadlocker 242 is applied.*

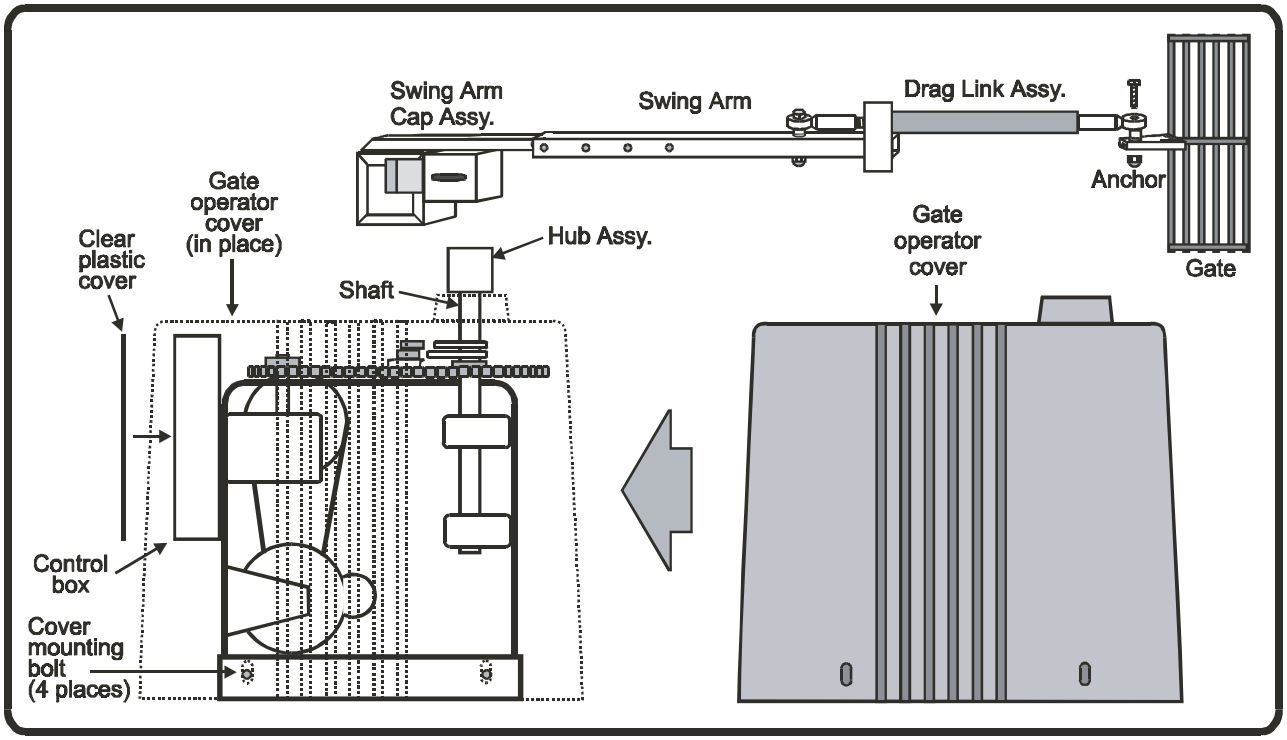

Figure 20. Gate Operator Disassembly and Assembly

Gate Operator Serial Number: **UPS: Yes** **No**

When LOW BATTERY is detected: Gate Opens **Gate Closes**

• Refer to Figure 20, above, to perform the following instructions.

1. **Turn off power to the gate operator *at the circuit breaker* and wait for one minute.**
2. Inspect Gate Arm (Swing Arm Cap Assembly, Swing Arm and Drag Link Assembly) for wear and hardware tightness. Check (✓) its box in the Maintenance Schedule.
3. Disconnect Drag Link from Anchor, then loosen mounting bolt and remove Swing Arm Cap Assembly and Drag Link Assembly from drive shaft. Set this assembly aside.
4. Push and pull the Gate to ensure it swings freely (grease if necessary). Check (✓) its box in the Maintenance Schedule.
5. Remove the cover mounting bolts and remove the gate operator cover.
6. Reinstall the Drag Link, Swing Arm and Swing Arm Cap Assemblies.
7. Perform preventive maintenance tasks 3 to 15.
8. After completing all checks, perform the procedure found in Part 2, System Installation, paragraph N, Final Assembly of Gate Operator.

The following table is provided to help you keep a record of the maintenance schedule. Write the inspection date in the left-hand box and check (✓) the boxes across as you perform your maintenance procedures.

MAINTENANCE SCHEDULE TABLE

DATE	ARM	GATE	CHAIN	SPROCKET	LIMIT SWITCHES	BELT	PULLEYS	GEAR BOX	CONTROL BOARD	WIRING	NO RUST	FIRE OPEN	GATE SENSE	PHOTO SEN.

APPENDIX A
SYSTEM OPERATION REFERENCE

CONTROLS, INDICATORS, INPUTS, ADJUSTMENTS AND CONNECTORS

For control and indicator locations, refer to Figure 20. For detailed explanations of the Gate Operator's various, controls, indicators, inputs, adjustments and connectors, refer to the following pages.

CONTROLS

SWITCH S1 (OFF/ON DIP switch with functions listed on right side of switch.)

TIMER (S1-1)	Sets the Reclose Timer to OFF (left) or ON (right). When enabled, the timer controls how long the gate waits at the open limit before closing. The Timer can be set from 0-250 seconds by adjusting the Reclose Timer pot (R94). During a power outage, if the gate is fully open and TIMER is ON, **the Reclose Timer starts after the restoration of power**, causing a fully open gate to close automatically.
ATG (S1-2)	The ATG feature helps prevent two cars from entering on one OPEN command. **ATG ON:** Inside or Outside Interrupt Loop activation does not affect an opening gate, and Inside Interrupt Loop deactivation closes an opening gate. Inside or Outside Interrupt Loop activation stops a closing gate, and when the loop deactivates the gate closes. **ATG OFF:** Loops have no effect on an opening gate. Inside or Outside Interrupt Loop activation opens a closing gate.
SLIDE (S1-3)	Set in conjunction with switch S1-4; these switches select one of four GATE TYPES (Slide, Swing, Barrier, or Linear).
SWING (S1-4)	Set in conjunction with switch S1-3; these switches select one of four GATE TYPES (Slide, Swing, Barrier, or Linear).
MASTER/SINGLE (S1-5)	Sets the unit to MASTER or SECOND for two-gate (one master and one second) operation.
BIPART (S1-6)	When set in conjunction with switch S1-7, these switches select one of four Master/Second configurations (Bipart, Bipart-Latch, Trap, Tandem).
LATCH/TRAP (S1-7)	When set in conjunction with switches S1-6, these switches select one of four Master/Second configurations (Bipart, Bipart-Latch, Trap, Tandem)
(NOT USED) (S1-8)	This switch is not used.

SETTING THE GATE TYPE

SLIDE	Set switch S1-3 ON (right) and S1-4 OFF (left).
SWING	Set switch S1-3 OFF (left) and S1-4 ON (right).
BARRIER	Set switch S1-3 OFF (left) and S1-4 OFF (left).
LINEAR	Set switch S1-3 ON (right) and S1-4 ON (right).

NOTES:

1. *If Gate Type is set to SLIDE, gate brakes whenever it stops.*
2. *If Gate Type is set to SWING, gate brakes only when it reaches the open or close limit.*
3. *If Gate Type is set to BARRIER or LINEAR, the gate never brakes.*

SETTING SWITCH S1 FOR MASTER/SECOND OPERATION (DUAL-GATE SYSTEM)

MASTER/SINGLE (S1-5)	On the master Gate Operator, set switch S1-5 ON (right). On the second gate operator, set switch S1-5 to OFF (left).
BIPART	Set switch S1-6 ON (right) and switch S1-7 OFF (left).
BIPART-LATCH	Set switch S1-6 ON (right) and switch S1-7 ON (right).
TRAP	Set switch S1-6 OFF (left) and switch S1-7 ON (right).
TANDEM	Set switch S1-6 OFF (left) and switch S1-7 OFF (left).
SWITCH S2 GATE OPEN TO LEFT/RIGHT	Selects the direction the gate will open (left/right).
SWITCH S3 LOW BATTERY LEFT/RIGHT	Selects the direction the gate will move (left/right) and remain when the Low Battery input is activated by an Uninterruptible Power Supply (UPS).

INDICATORS

LED indicators light when controls and inputs are active. Additional indicators are as follows:

LEFT LIMIT	Indicates that the LEFT limit switch is activated.
RIGHT LIMIT	Indicates that the RIGHT limit switch is activated.
MTR LEFT	Indicates that the gate is moving to the left.
MTR RIGHT	Indicates that the gate is moving to the right.
XMIT	Indicates data is being sent to the other unit in a Master/Second system.
RECV	Indicates data is being received from the other unit in a Master/Second system.
TIMER ON	Indicates the Reclose Timer is running. Timer is set at pot R94.
OBSTRUCTION	Indicates the peak motor current threshold was reached. See Fault List on page 31.
INTERRUPT BAR (EDGE SENSOR)	Indicates Interrupt Bar (Edge Sensor) switch was activated and the motor was stopped.
OPEN MTR	Indicates the motor is engaged, but is not drawing any current. The thermal overload switch on the motor may need to be reset. See Fault List on page 31.
STUCK LIMIT	Indicates that a limit switch is stuck closed.
MAX RUN TIME	Indicates the motor ran for more than 75 seconds without reaching a limit switch, and was stopped. Usually requires mechanical service. See Fault List on page 31.
MAGLOCK	Indicates the MagLock is engaged.
OBSTRUCTION ALARM	Indicates the Obstruction alarm has sounded after two consecutive gate obstruction faults.

FUNCTIONAL INPUTS

NOTES:

1. *The term "activation" means closing an input circuit (via a relay or switch), and may be momentary or continuous. Momentary activations are superceded by any command. Continuous activations are superceded only by an overriding command.*
2. *(Activating any command when gate is at the open limit stops the Reclose Timer. When the command (except Manual CLOSE and STOP) is cleared, the Reclose Timer is reset.*

MANUAL INPUTS: OPEN, CLOSE, AND STOP (TB2)

MAN OPEN	Activation fully opens the gate. Continuous activation holds gate open. MAN OPEN overrides Anti-Tail-gate (ATG), Reclose Timer, and all controls but MAN STOP.
MAN CLOSE	Activation fully closes the gate. Continuous activation holds gate closed. MAN CLOSE overrides all controls but MAN STOP, MAN OPEN and FIRE.
MAN STOP	De-activation stops opening and closing gates. MAN STOP overrides Reclose Timer and all other controls, manual or automatic. If MAN STOP is disconnected from its COMMON, no commands affect the gate.

ENTRY SYSTEM/FIRE SWITCH INPUTS (TB9)

CYCLE

Reclose Timer OFF:

Activation opens the gate, which remains open until another command is received. A CYCLE command when the gate is fully open closes the gate. This Alternate action allows a single command to both open and close the gate. CYCLE also opens a closing gate. If Anti-Tailgating (ATG) is ON, Alternate Action is disabled. With ATG ON, the gate begins closing as soon as the INTERRUPT LOOP clears.

Reclose Timer ON:

Activation opens the gate, then the Reclose Timer closes the gate. A CYCLE command also opens a closing gate, but will not close a fully open gate if the Reclose Timer is ON. If Anti-Tailgating (ATG) is ON, the gate closes as soon as the INTERRUPT LOOP clears.

FIRE — Activation opens the gate. Continuous activation holds the gate open. If Reclose Timer is OFF, when FIRE is deactivated, gate closes immediately. If Reclose Timer is ON, when FIRE is deactivated, the Reclose Timer starts. FIRE overrides all faults and commands but Manual STOP.

EXIT LOOP/SHADOW LOOP DETECTOR INPUTS (TB10)

EXIT LOOP	Same as CYCLE, but does not close the gate when it is fully open.
SHADOW LOOP	Activation prevents the gate from opening or closing so the gate won't hit a vehicle. If the gate is already moving, or if the gate is not fully opened or closed, this input has no effect (swing gates only).

INSIDE/OUTSIDE INTERRUPT LOOP DETECTOR (TB16)

IF GATE TYPE IS **SWING** OR **LINEAR** (ATG IS NOT FUNCTIONAL):

Inside Interrupt Loop: Activation stops an opening or closing gate and deactivation opens the gate.

Outside Interrupt Loop: Activation opens a closing gate.

IF GATE TYPE IS **SLIDE** OR **BARRIER** AND ATG IS OFF:

Inside Interrupt Loop: Activation opens a closing gate.

Outside Interrupt Loop: Activation opens a closing gate.

IF GATE TYPE IS **SLIDE** OR **BARRIER** AND ATG IS ON:

Inside Interrupt Loop: Activation/deactivation closes an opening gate. Activation stops a closing gate and deactivation closes the gate.

Outside Interrupt Loop: Activation stops a closing gate and deactivation closes the gate.

INSIDE/OUTSIDE PHOTO-SENSOR (TB3)

IF GATE TYPE IS **SWING** OR **LINEAR**:

Inside Photo Sensor: Activation stops a moving gate and deactivation restarts the gate.

Outside Photo Sensor: Activation stops a closing gate and deactivation restarts the gate.

IF GATE TYPE IS **SLIDE** OR **BARRIER**:

Inside Photo Sensor: Activation stops an opening gate and deactivation restarts the gate.

Outside Photo Sensor: Activation stops a closing gate and deactivation restarts the gate.

INTERRUPT BAR INPUTS (TB11)

INTERRUPT BAR	Activation causes gate to stop and reverse a few inches.

INSIDE/OUTSIDE INT. SENSE / SHADOW SENSE / EXIT SENSE (TB12/TB13/TB14/TB15) INPUTS

INSIDE INTERRUPT SENSE	Input from an Inside Interrupt loop provides the signal for an optional LiftMaster loop detector add-on board. Operation is the same as the Interrupt Loop input, above.
OUTSIDE INTERRUPT SENSE	Input from an Outside Interrupt loop provides the signal for an optional LiftMaster loop detector add-on board. Operation is the same as the Interrupt Loop input, above.
SHADOW SENSE	Input from shadow loop provides signal for optional LiftMaster loop detector add-on board. Operation is the same as Shadow Loop input on page 38.
EXIT SENSE	Input from exit loop provides signal for optional LiftMaster loop detector add-on board. Operation is the same as Exit Loop input on page 38.

RADIO INPUT (TB6)

RADIO RECV	Convenience terminals provide power (24VAC, 200mA) and signal connection for a radio receiver. Activation is the same as CYCLE.

MAG LOCK INPUT (TB4)

MAG LOCK	**NO** and **COM** inputs can close a circuit (i.e., MagLock) when the Close Limit switch is activated (the gate is fully closed). **NC** and **COM** inputs close a circuit (security camera, camcorder, light, etc.) when the Close Limit switch is deactivated (when gate is not fully closed).

MASTER/SECOND I/O INPUT (TB1)

Input/output terminals are used to communicate with a second gate operator in a Master/Second system.

LOW BATTERY (TB18)

Activation fully opens or closes the gate, depending the setting of Switch S3.

OBSTRUCTION ALARM (TB17)

Relay contacts close to provide 24VDC alarm power if the gate has two consecutive obstruction faults.

ADJUSTMENTS

OBSTRUCTION RIGHT (R78)	Adjustable pot controls gate sensitivity to blockages by the instantaneous rise in motor current. When the limit is exceeded, gate stops and reverses a minimum of 2 inches.
OBSTRUCTION LEFT (R81)	Adjustable pot controls gate sensitivity to blockages by the instantaneous rise in motor current. When the limit is exceeded, gate stops and reverses a minimum of 2 inches. ***NOTE:*** *LiftMaster gate operators have left and right obstruction sense adjustments where other gate operators have only one. This allows greater flexibility of installation. For instance, you can install a gate on an incline and not worry about sacrificing downhill gate sensitivity.*
START-UP (R119)	Adjustable pot controls the delay in sensitivity to obstruction sense inputs. This delay in sensitivity prevents the initial motor start up current from causing a fault condition. The weight of the gate determines this setting.
RECLOSE TIMER (R94)	Adjustable pot controls the time delay between gate reaching full open and starting to reclose. The Reclose Timer is adjustable from 0 to 250 seconds.

CONNECTORS

PWR INPUT (J1)	Connector for AC input power.
MOTOR POWER (J3)	Connector for the motor cable.
LIMIT SWITCH (J4)	Connector for the left/right limit switch cable.
LOOP DETECTOR (J15)	Connector for optional LiftMaster Outside Interrupt Loop detector add-on board.
LOOP DETECTOR (J12)	Connector for optional LiftMaster Inside Interrupt Loop detector add-on board.
LOOP DETECTOR (J13)	Connector for optional LiftMaster Shadow Loop detector add-on board.
LOOP DETECTOR (J14)	Connector for optional LiftMaster Exit Loop detector add-on board.
OBSTRUCTION ALARM	Connector for factory installed Alarm.

APPENDIX B
SW 2000-B3 PARTS LIST

ITEM #	PART NAME	PART NUMBER
1	B3 CONTROLLER BOARD	SN1190168
2	CONTROL BOX COVER	41-20066
3	C WASHER 3/4" OD, 7/8" ID	85-FW-87C
4	**ALARM ASSEMBLY**	76-20012
5	✤ ALARM BRACKET	10-20051
6	**SW 2000 MOTOR ASSEMBLY**	75-20028
7	✤ 2.5" PULLEY	17-20115
8	**MOTOR CABLE ASSEMBLY**	94-20025
9	31" V-BELT 1/2" WIDE	16-20077
10	DPST SWITCH	23-20088
11	**CONTROL BOX ASSEMBLY**	76-20018
12	**SW2000 GEAR BOX ASSEMBLY**	75-20158
13	✤ 7" PULLEY	17-20124
14	✤ SPROCKET, CHAIN, #40, 20T, 7/8 BORE	15-20159
15	**CHAIN TENSIONER KIT ASSEMBLY**	77-20155
16	✤ IDLER SPROCKET (1)	15-40C17EX
17	**LIMIT SWITCH ASSEMBLY**	76-20023
18	✤ LIMIT SWITCH SUPPORT BRACKET	10-20046
19	✤ LIMIT SWITCH CABLE	94-20160
20	**LIMIT CAM ASSEMBLY**	75-20011
21	**SHAFT ASSEMBLY**	72-18512
22	✤ SW2000 MAIN SHAFT	11-18140
23	#40 NICKEL PLATED CHAIN	19-40081-N
24	SW2000 SHELF	10-20049
25	**COVER W/ACCESS DOOR ASSEMBLY**	75-20029
26	✤ COVER	13-18136
27	✤ DOOR ASSEMBLY	75-18469
28	✤ LOCK ASSEMBLY	75-18468
29	**QUICK RELEASE ARM CAP ASSEMBLY**	70-18494
30	**QUICK RELEASE ARM CAP HUB ASSEMBLY**	75-18479
31	DORCMA GATE OPERATOR WARNING LABEL	40-3504

	PARTS NOT SHOWN	
	✤ WOODROOF KEY (SHAFT ASSEMBLY)	80-20123
	✤ STAINLESS STEEL E-RING (SHAFT ASSEMBLY)	80-20145
	MASTER LINK #40	19-40001M
	DORCMA WARNING PLACARD	40-3505
	SW2000-X3 INSTALLATION MANUAL	01-20099
	X3 PROGRAMMING MANUAL	01-20100
	X3 MASTER/SECOND MANUAL	01-20101
	SW2000 ACCESSORY KIT	77-20128
	✤ SW2000 ACCESSORY HARDWARE	77-20020
	✤ SW2000 ROD END ASSEMBLY	75-20015
	✤ SW2000 SWING ARM EXTENSION	10-20050
	✤ SW2000 GATE ANCHOR	08-20052
	GATE SAFETY BROCHURE	01-G0582
Bold = Assembly	**✤ = Assembly Part**	

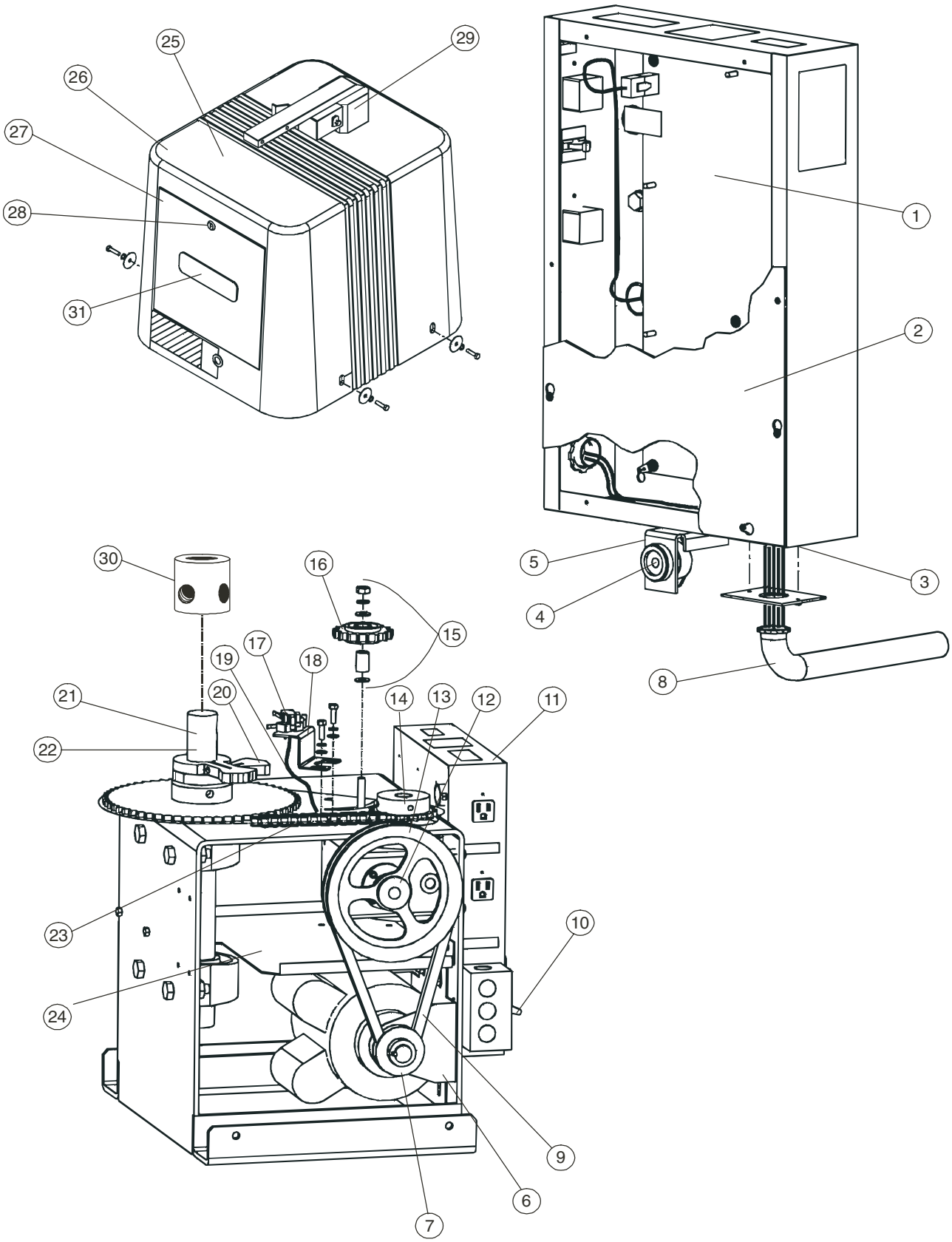

Figure 21. Exploded View

GLOSSARY

AC: Alternating Current. An electric current or voltage that reverses direction at regular intervals.

Alternate Action: Ability to open and close a fully open gate by using the same open command.

Arc: The area that is swept by a swing gate from fully closed to fully open position.

ATG: Anti-tailgating refers to a method of immediately closing an opening gate behind a vehicle so that an unauthorized vehicle can not follow the authorized vehicle through the gate.

DC: Direct Current. An electric current of constant value flowing in one direction only.

Dynamic Braking: Stopping the gate by activating the forward and reverse windings of the gate operator motor in each half AC cycle.

Fault: An abnormal condition which causes the gate to stop to protect the gate and the user.

Gate Sensitivity: The response of the gate operator to an exerting force to the gate.

Gear Reducer: A device that changes the speed and power of its driving force (motor).

Inrush Current: Initial current drawn into an electrical device due to its capacitive or inductive nature.

Interrupt Bar or Edge: A switch which is installed at the edge of a gate to protect an object which is situated between the gate and the gate frame.

LED: Light Emitting Diode. LEDs are indicators placed on the controller board which light up to indicate an action in the system.

Limit Switch: A switch which its closure indicates the gate has reached its open or close limit, causing the gate to stop. There are two limit switches, open and close.

Limit Cam: An object which its excursion corresponds to the gate traveling distance and closes the limit switch at the open or close limit of the gate.

Loop Sensor: A wire embedded in the ground for magnetically sensing large metallic objects (cars).

- Exit or Open Loop: Activation opens the gate.
- Interrupt or Reverse or Reopen Loop: Activation reverses or stops the gate.
- Shadow Loop: Activation prevents a fully open or closed gate from moving while a vehicle is inside the arc of a swing gate.

Loop Detector: An electronic device that is activated by a loop sensor sensing a metallic object.

Master/Second: A synchronized system containing a pair of gate operators.

Maglock: An electric magnet which is used to secure the closed gate.

Power Fail Option: A battery backup system which opens or closes the gate at power outage.

Pulley: A grooved wheel which transfers power via a belt.

Reclose Timer: An electronic timer which closes the fully open gate automatically.

Retry: A condition at which the stopped gate resumes its course automatically after the occurrence of a Fault.

RPM: Rotation Per Minute is a term to indicate the speed of an rotary object.

Sprocket: A toothed wheel which transfers power via a chain.

Thermal Overload: A condition at which a heat producing device shuts off automatically when it reaches a critical and damaging temperature level.

Torque: A force that causes rotation.

FCC REQUIREMENTS

INSTALLATION

When you are ready to install this system, call your telephone company and give them the following information:

1. The telephone number of the line to which you will connect the system.
2. The FCC registration number for the system, which is DS83E7 - 17196 - ALE.
3. The ringer equivalence number (REN) which is 0.1B.

This system connects to the telephone line by means of a standard jack called the USOC RJ11C. If this type of jack is not available where you want to install the system, you will need to order it from the telephone company.

TYPE OF SERVICE

Your LiftMaster Model SW2000-X3 operator is designed to be used on standard-device telephone lines. They should not be used on coin service or party lines. If you have any questions about your telephone line, such as how may pieces of equipment you can connect to it, the telephone company will provide this information upon request.

TELEPHONE COMPANY PROCEDURES

The goal of the telephone company is to provide you with the best service it can. In order to do this, it may occasionally be necessary for them to make changes in their equipment, operations, or procedures. If these changes might affect your service or operation of your equipment, the telephone company will give you notice, in writing, to allow you to make any changes necessary to maintain uninterrupted service.

IF PROBLEMS ARISE

If any of your telephone equipment is not operating properly, you should immediately remove it from your telephone line, as it may cause harm to telephone network. If the telephone company notes a problem, they may temporarily discontinue service. When practical, they will notify you in advance of this documentation. If advance notice is not feasible, you will be notified as soon as possible. When you are notified, you will be given the opportunity to correct the problem and informed of your right to file a complaint with the FCC.

In the event that any repairs are ever needed on your system, they should be performed only by an authorized representative of LiftMaster, Inc.

DISCONNECTION

If you should ever decide to permanently disconnect your operator from its present line, please call the telephone company and let them know of this change.

RADIO FREQUENCY

This equipment has been tested and found to comply with the limits for a Class B digital device, pursuant to part 15 of the FCC Rules. These limits are designed to provide reasonable protection against harmful interference when the equipment is operated in a residential environment. This equipment generates, uses, and can radiate radio frequency energy and, if not installed and used in accordance with the instruction manual, may cause harmful interference to radio communications. However, there is no guarantee that interference will not occur in a particular installation. If this equipment does cause harmful interference to radio or television reception, which can be determined by turning the equipment off and on, the user is encouraged to try to correct the interference by one or more of the following measures:

1. Reorient or relocate the receiving antenna.
2. Increase the separation between the equipment and receiver.
3. Connect the equipment into an outlet on a circuit different from that to which the receiver is connected.
4. Consult the dealer or an experienced radio/TV technician for help.

If necessary, the user should consult the dealer or an experienced radio/television technician for additional suggestions. The user may find the following booklet prepared by the FCC helpful: “How to Identify and Resolve Radio-Television Interface Problems”. This booklet is available from the United States Government Printing Office. Washington, D.C., 20402. Stock No. 004-000-00345-4.

NOTICE TO CANADIAN USERS

NOTICE: The Industry Canada label identifies certified equipment. This certification means that the equipment meets telecommunications network protective, operation and safety requirements as prescribed in the appropriate Terminal Equipment Technical Requirements document(s). The Department does not guarantee the equipment to the user's satisfaction.

Before installing this equipment, users should ensure that it is permissible to be connected to the facilities of the local telecommunications company. The equipment must also be installed using an acceptable method of connection. The customer should be aware that compliance with the above conditions may not prevent degradation of service in some situations.

Repairs to certified equipment should be coordinated by a representative designated by the supplier. Any repairs or alterations made by the user to this equipment, or equipment malfunctions, may give the telecommunications company cause to request the user to disconnect the equipment.

Users should ensure for their own protection that the electrical ground connections of the power utility, telephone lines and internal metallic water pipe system, if present, are connected together. This precaution may be particularly important in rural areas.

Caution: Users should not attempt to make such connections themselves, but should contact the appropriate electric inspection authority, or an electrician, as appropriate.

NOTICE: The **Ringer Equivalence Number** (REN) assigned to each terminal device provides an indication of the maximum number of terminals allowed to be connected to a telephone interface. The termination on any interface may consist of any combination of devices subject only to the requirement that the sum of the Ringer Equivalence Numbers of all the devices does not exceed 5.

OPERATOR NOTES

OPERATOR NOTES

COPYRIGHT 2004
ALL RIGHTS RESERVED

This document is protected by copyright and may not be copied or adapted without the prior written consent of LiftMaster. This documentation contains information proprietary to LiftMaster and such information may not be distributed without the prior written consent of LiftMaster. The software and firmware included in the LiftMaster product as they relate to this documentation are also protected by copyright and contain information proprietary to LiftMaster.

FOR TECHNICAL SUPPORT OR TO ORDER REPLACEMENT PARTS, CALL OUR TOLL FREE NUMBER:
(800) 528-2806 Monday through Friday 5 AM - 6 PM, Saturday, 7 AM - 3:30 PM (PST)

Visit us at www.liftmaster.com

01-20200 Rev F

Printed in Mexico