encore™

Hear, There and Everywhere

Multi-Room Audio Distribution System

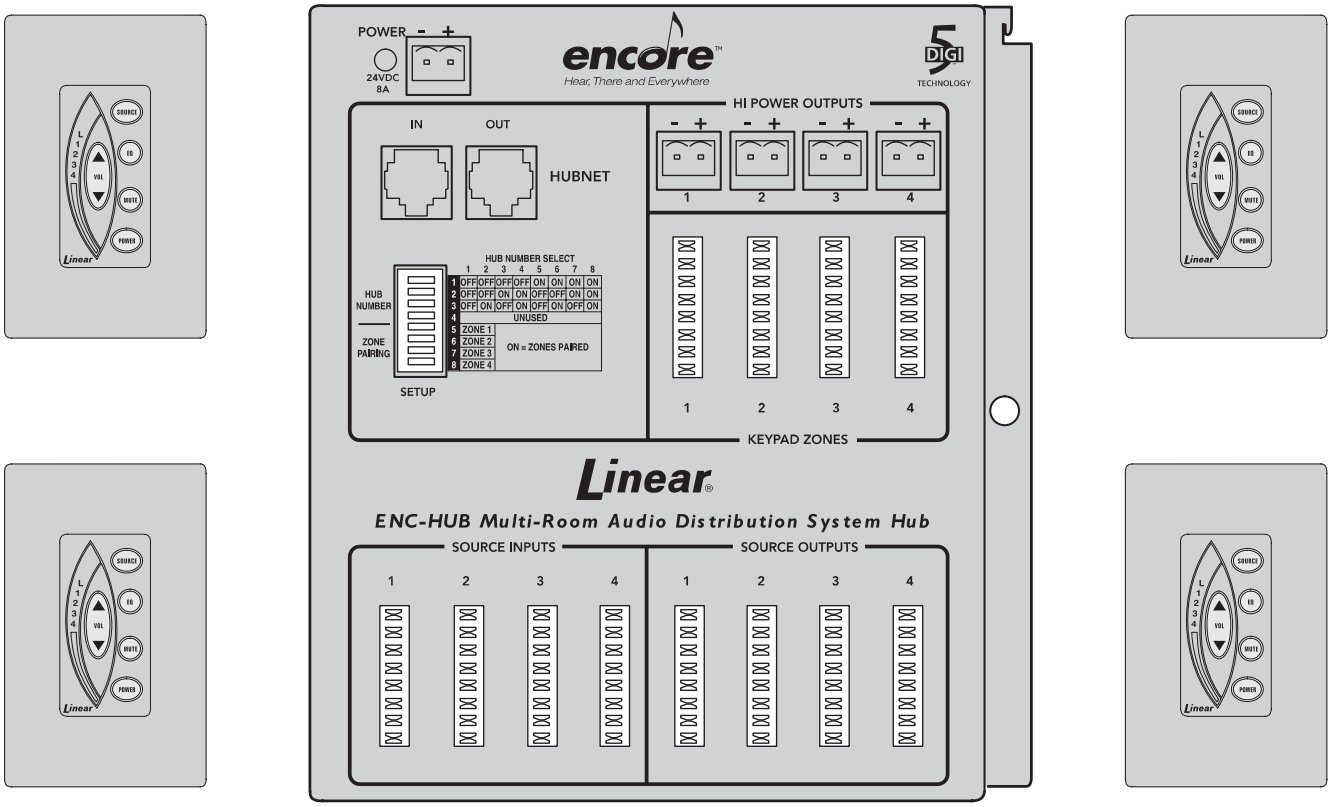

Installation & Setup Instructions

Linear®

Building On Innovation.

USA & Canada (800) 421-1587 & (800) 392-0123

(760) 438-7000 - Toll Free FAX (800) 468-1340

www.linearcorp.com

Safety Information and Cautions

Explanation of Graphic Warning Symbols

This symbol is intended to alert the user to the presence of un-insulated "dangerous voltage" within the product's enclosure that may be of sufficient magnitude to constitute a risk of electric shock.

This symbol is intended to alert the user to the presence of important operating and maintenance (servicing) instructions in the literature accompanying the device.

★ ***WARNING!*** *To prevent fire or shock hazard, do not expose this device to rain, water, or wet locations.*

CAUTION

RISK OF ELECTRIC SHOCK
DO NOT OPEN

CAUTION: TO REDUCE THE RISK OF ELECTRIC SHOCK

DO NOT REMOVE COVER (OR BACK)

NO USER-SERVICEABLE PARTS INSIDE

REFER SERVICE TO QUALIFIED PERSONNEL

General Wiring Cautions

- DO NOT USE EXCESSIVE FORCE ON PUNCH-DOWN TERMINALS! IF USING AN IMPACT TYPE 110 PUNCH-DOWN TOOL, SET THE FORCE ADJUSTMENT TO "LOW" BEFORE TERMINATING CAT-5 CABLES.
- The 120 VAC line to the structured wiring enclosure junction box must be run by a licensed electrician.
- Individual CAT-5 cable runs from the hub to any keypad or source input wall plate should not exceed 500 feet.
- Label all cables for identification at the hub.
- DO NOT SPLICE CABLES! Splices are unreliable and defeat the signal isolation properties of the cable.
- DO NOT STAPLE CABLES! Staples cause shorts.
- DO NOT RUN 120 VAC ELECTRICAL WIRES INSIDE KEYPAD OR SOURCE INPUT WALL PLATE JUNCTION BOXES. If you encounter 120 VAC wires running through these junction boxes, you must have a qualified electrician rerun those wires around the junction box.
- KEEP CABLES AT LEAST 18 INCHES FROM FLUORESCENT LIGHT FIXTURES, DIMMER CONTROLS, AND ALL OTHER WIRING. This includes AC wiring, security cable, cordless phone units, and other control wires. These can cause a "hum" or "buzzing" sound.
- Keep all cables away from objects such as heating and air conditioning ducts, metal construction plates, and anything else with sharp edges that can damage cables.

Keypad Cautions

- DO NOT install keypads in saunas. They will not withstand the extreme heat and moisture.

Important Safety Notes

POWER SOURCE This unit should only be connected to a 110-120 VAC power source as marked on the unit.

GROUNDING OR POLARIZATION Do not defeat the safety purpose of the polarized or grounding-type plug. A polarized plug has two blades with one wider than the other. A grounding type plug has two blades and a third grounding prong. The wide blade or the third prong are provided for your safety. If the provided plug does not fit into your outlet, consult an electrician for replacement of the obsolete outlet.

NON-USE PERIODS Always turn the unit off when it is not being used or left unattended for long periods of time.

OBJECT AND LIQUID ENTRY Never push objects of any kind into the unit through the cabinet slots as they may touch dangerous voltage points or short out parts that could result in a fire or electric shock. Never spill liquid of any kind on the unit.

CLEANING Unplug the unit from the wall outlet before cleaning or polishing it. Do not use liquid cleaners, aerosol cleaners, gasoline or other flammable fluid. Clean the exterior of the unit with a slightly damp cloth.

WATER AND MOISTURE Do not use power line operated units near water - for example, near a bathtub, washbowl, kitchen sink, or laundry tub, in a wet basement, or near a jacuzzi or swimming pool.

VENTILATION The appliance should be situated so that its location or position does not interfere with its proper ventilation. For example, the unit should not be situated on a bed, sofa, rug or placed in a built-in installation that may block the flow of air through the ventilation openings.

POWER CORD PROTECTION Power supply cords should be routed so that they are not likely to be walked on or pinched by items placed upon or against them paying particular attention to cords at plugs, convenience receptacles, and the point where they exit from the appliance.

READ INSTRUCTIONS All the safety and operating instructions should be read before the product is operated.

RETAIN INSTRUCTIONS The safety and operating instructions should be retained for future reference.

HEED WARNINGS All warnings on the product and in the operating instructions should be adhered to.

FOLLOW INSTRUCTIONS All operating and use instructions should be followed.

ATTACHMENTS Do not use attachments not recommended by the product manufacturer as they may cause hazards.

ACCESSORIES To prevent injury, this apparatus must be securely attached to the floor/wall in accordance with the Installation Instructions.

OVERLOADING Do not overload wall outlets, extension cords, or integral convenience receptacles as this can result in a risk of fire or electric shock.

REPLACEMENT PARTS When replacement parts are required, be sure the service technician has used replacement parts specified by the manufacturer or have the same characteristics as the original part. Unauthorized substitutions may result in fire, electric shock, or other hazards.

SAFETY CHECK Upon completion of any service or repairs to this product, ask the service technician to perform safety checks to determine that the product is in proper operating condition.

WALL OR CEILING MOUNTING The product should be mounted to a wall or ceiling only as recommended by the manufacturer.

HEAT The product should be situated away from heat sources such as radiators, heat registers, stoves, or other products (including amplifiers) that produce heat.

Table of Contents

Introduction 2

System Components 3
- ENC-HUB System Hub 3
- ENC-PS Power Supply 3
- ENC-DRS Keypad 3
- ENC-SIWP Source Input Wall Plate 3
- ENC-LIWP Local Input Wall Plate 3
- ENC-REM Basic Remote Control 3
- ENC-LRM Learning Remote Control 3
- ENC-DRSFA-SL-4 Screwless Faceplate Kit (4-pack) (Almond) 3
- ENC-DRSFB-SL-4 Screwless Faceplate Kit (4-pack) (Black) 3
- ENC-DRSFW4 Faceplate Kit (4-pack) (White) 3
- ENC-DRSFB4 Faceplate Kit (4-pack) (Black) 3
- ENC-DRSFA4 Faceplate Kit (4-pack) (Almond) 3
- 2171-4 Single-head IR Emitter (4-pack) 3

Hub and Power Supply Setup 4
- Structured Wiring Enclosure 4
- Mounting Bracket Installation 4
- Hub and Power Supply Installation 4
- Zone Pairing 4

Expansion Hub Setup 5
- Expansion Hub Installation 5

Source Input Wall Plate Setup 6
- Input Gain Switches 6
- IR Out Connection 6
- Source Input Wall Plate Installation 6

Keypad Setup 7
- Keypad Installation 7
- Optional External IR Target Connection 7
- Speaker Connection 7

Local Input Wall Plate Setup 8
- Input Gain Switches 8
- IR Out Connection 8
- Local Input Wall Plate Installation 8

Final Connections and Testing 9
- Audio Source Component Connections 9
- Connect Power 9
- Basic System Testing 9

Specifications 10

Limited Warranty 10

Introduction

The Encore! Multi-Room Audio Distribution System is an expandable system that distributes four analog or digital audio sources over Cat-5 cable to four independent speaker zones. Each speaker zone features a backlit keypad with an integrated digital amplifier that selects the audio source and controls the volume, tone, balance, loudness, and all other functions of the system. The system can be expanded with up to eight distribution hubs for a total of 32 speaker zones.

Each keypad (Model ENC-DRS) serves as a speaker zone controller for the system. Up to four keypads can be connected to each hub. Each keypad contains a Class D digital stereo amplifier providing up to 60 watts maximum output power (30 watts per channel) and is designed to connect to a pair of 4, 6, or 8-ohm speakers.

Source input wall plates (Model ENC-SIWP) serve as primary audio source inputs and wire directly to the hub. Up to four source input wall plates can be connected to the “primary” or “base” hub.

Local input wall plates (Model ENC-LIWP) serve as a local audio source input at each speaker zone. Local input wall plates connect directly to the keypad.

The keypads select between the four primary hub audio sources from source input wall plates, or from its local audio source connected to a local input wall plate. Both input wall plates feature a high quality analog-to-digital converter that encodes analog source material to a digital audio format for the system. All system connections are with Cat-5 cable, the keypads and both types of wall plates mount in a single-gang or larger junction boxes.

The system features IR remote control. An infrared repeater system monitors the infrared receivers at each keypad and repeats the infrared remote control signals to the audio source components through infrared emitters connected to the wall plates. IR emitters are sold in a 4-pack as Model 2171-4.

Two remote controls are available. The basic remote control (Model ENC-REM) is a miniature unit that can select the audio source, control the keypad’s volume, and control mute and power. The larger learning remote control (Model ENC-LRM) has all of the features of the basic remote with the addition of a built-in IR code library and IR learning capability allowing it to control virtually any audio source component. The learning remote also has macro capabilities that allow programming multiple key sequences.

Features

- Pure digital audio delivers crystal clear sound to all zones with no signal loss
- Class D digital amplifier in each keypad providing 60 watts of output power
- Four speaker zones expandable to 32 speaker zones
- IR receiver built into each keypad, IR emitter output on source input wall plates
- Cat-5 wiring
- Keypads and audio input wall plates mount in single-gang junction boxes

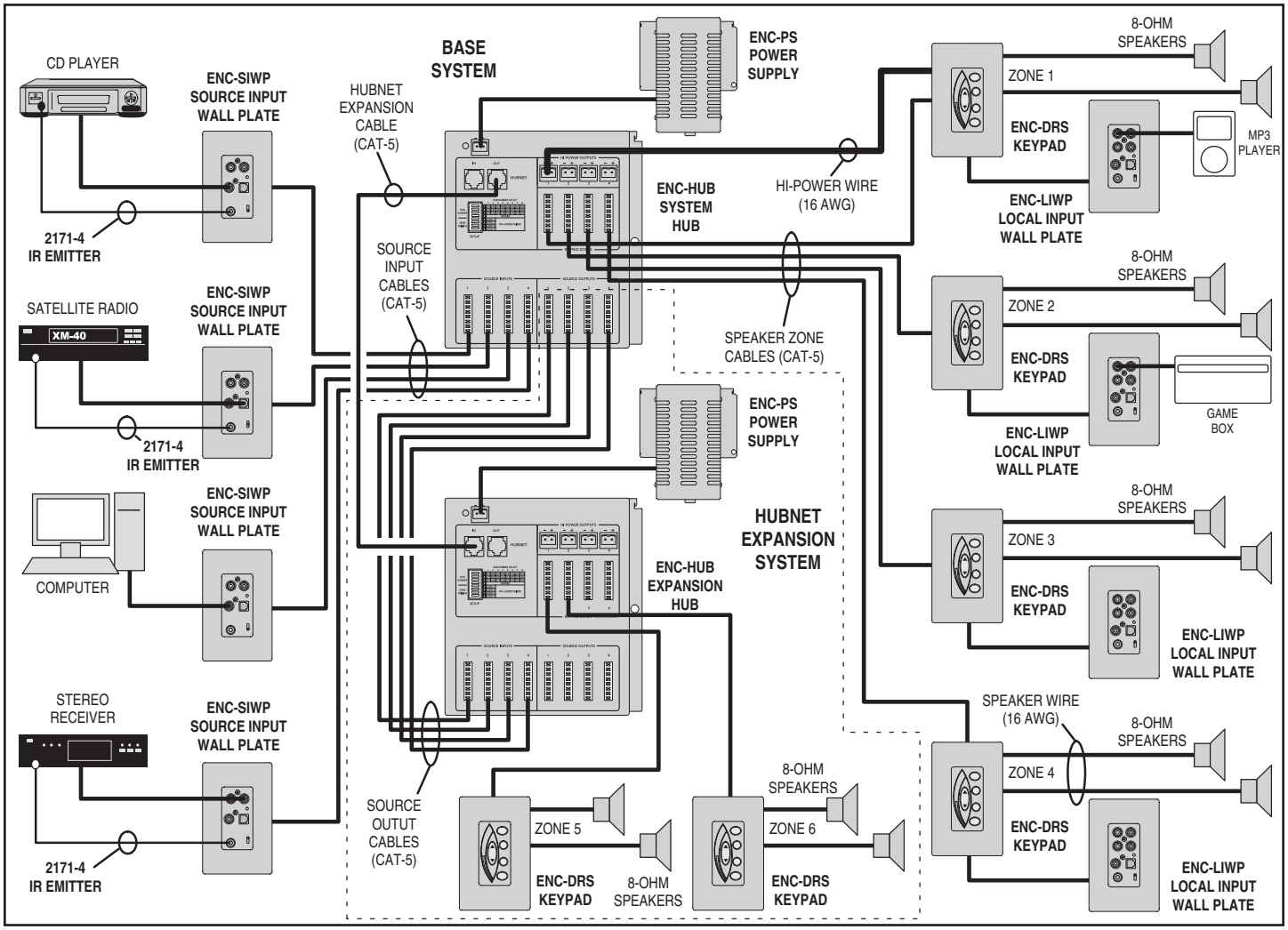

Figure 1. Example Six Zone Installation

ENC-HUB
System Hub

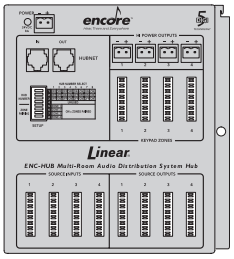

- Pure digital audio delivers crystal clear sound to all zones with no signal loss
- Four speaker zones
- Expandable to 32 speaker zones
- Cat-5 wiring
- Mounts in structured wiring enclosure or on H275 bracket
- Four high power terminals for long keypad runs

ENC-PS
Power Supply

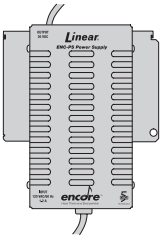

- 120 VAC input, 26 VDC @ 8 Amp output
- Output cable has connector for hub
- Green power indicator
- Mounts in structured wiring enclosure or on H275 bracket

ENC-DRS
Keypad

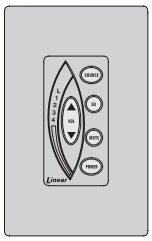

- Controls speaker zone's volume, tone, balance, and loudness
- Integrated Class D digital amplifier
- Built-in IR receiver for IR remote control of source components
- Blue LED backlit buttons
- White keypad bezel and faceplate

ENC-SIWP
Source Input Wall Plate

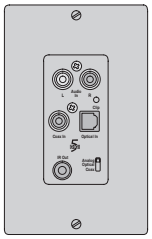

- Stereo analog audio inputs
- Coaxial digital and SPDIF optical digital audio inputs
- High quality analog-to-digital converter
- IR emitter output

ENC-LIWP
Local Input Wall Plate

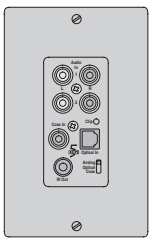

- Coaxial digital and SPDIF optical digital audio inputs
- Two stereo analog audio inputs
- High quality analog-to-digital converter
- IR emitter output

ENC-REM
Basic Remote Control

- Miniature size
- Selects audio source
- Adjusts speaker volume and has mute function
- Remotely controls system power

ENC-LRM
Learning Remote Control

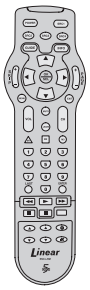

- Remote can learn codes from other remotes, providing ability to control source components from a remote location
- Selects audio source
- Adjusts speaker volume and has mute function
- Remotely controls system power
- Programmable macros with up to 19 steps each

ENC-DRSFA-SL-4
Screwless Faceplate Kit
(4-pack) (Almond)

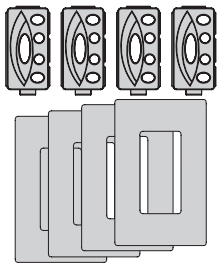

- Four almond keypad bezels
- Four almond screwless faceplates
- Changes keypad color or replaces damaged or worn faceplate
- For ENC-DRS keypad

ENC-DRSFB-SL-4
Screwless Faceplate Kit
(4-pack) (Black)

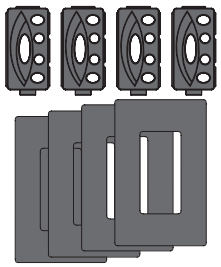

- Four black keypad bezels
- Four black screwless faceplates
- Changes keypad color or replaces damaged or worn faceplate
- For ENC-DRS keypad

ENC-DRSFW4
Faceplate Kit
(4-pack) (White)

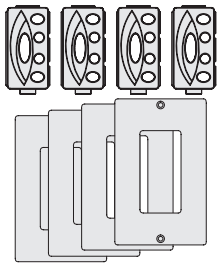

- Four white keypad bezels
- Four white faceplates
- Includes matching plate screws
- For changing color or replacing damaged or worn faceplates
- For ENC-DRS keypad, ENC-SIWP and ENC-LIWP input plates.

ENC-DRSFB4
Faceplate Kit
(4-pack) (Black)

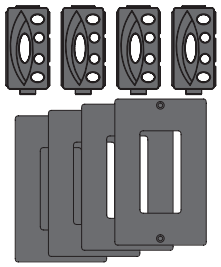

- Four black keypad bezels
- Four black faceplates
- Includes matching plate screws
- For changing color or replacing damaged or worn faceplates
- For ENC-DRS keypad.

ENC-DRSFA4
Faceplate Kit
(4-pack) (Almond)

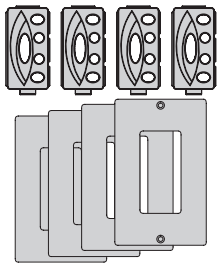

- Four almond keypad bezels
- Four almond faceplates
- Includes matching plate screws
- For changing color or replacing damaged or worn faceplates
- For ENC-DRS keypad.

2171-4
Single-head IR Emitter
(4-pack)

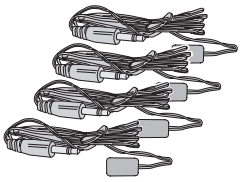

- Single-head IR emitter, 4-pack
- Repeats IR signals from keypads to source components
- Ten foot cord with mini plug
- Adhesive back on emitter

Hub and Power Supply Setup

The hub and power supply can mount on the grid in a Linear structured wiring enclosure or to a universal mounting bracket (Model H275). The bracket is included in the Model ENC-KIT-M installation kit.

Structured Wiring Enclosure

If the hub and power supply will be mounted in a structured wiring enclosure, follow these steps:

1. Determine a location for the structured wiring enclosure. Be sure power is available near the location to wire an outlet box in the enclosure.
2. Install a J-box in the enclosure and have a ***licensed electrician*** route power to the J-box.
3. Install an outlet in the J-box and install an outlet cover plate.

➜ ***WARNING:*** *Do not connect the power supply to the AC line until after the installation is complete.*

Mounting Bracket Installation

If the hub and power supply will be mounted on a Model H275 mounting bracket, follow these steps:

1. Determine a location for the mounting bracket. Be sure power is available near the location to wire an outlet box next to the mounting bracket location.
2. Use four screws to mount the H275 bracket on a suitable mounting surface.
3. Have a ***licensed electrician*** install an outlet in a J-box near the mounting bracket. Install an outlet cover plate.

➜ ***WARNING:*** *Do not connect the power supply to the AC line until after the installation is complete.*

Hub and Power Supply Installation

The hub and power supply mount to the grid holes in the structured wiring enclosure or on the universal mounting bracket.

1. Insert the hub into a set of grid mounting holes. Secure the hub with the snap lock retainer.
2. Insert the power supply into a set of grid mounting holes. Secure the power supply with the snap lock retainer.
3. Connect the power supply's DC output cable to the hub. The cable has a push-on terminal block that connects to the hub's **POWER** connector.

Zone Pairing

Zone pairing is optional. It allows simultaneous control of two or more speaker zones. A typical use would be in large rooms with multiple keypads and speakers. Paired zones can be controlled from any keypad in the pair, each keypad and speaker zone will perform identically.

Zone pairing is controlled by the **SETUP** switch on each hub.

1. Switch positions 5-8 select which zones to pair.
2. To pair two or more speaker zones, set the **SETUP** switch position to ON for any of the four speaker zones.

SWITCH #	SPEAKER ZONE
5	ZONE 1
6	ZONE 2
7	ZONE 3
8	ZONE 4

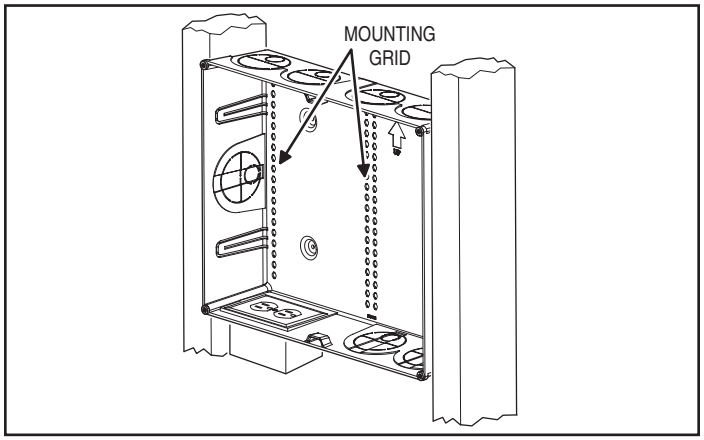

Figure 2. Structured Wiring Enclosure Mounting

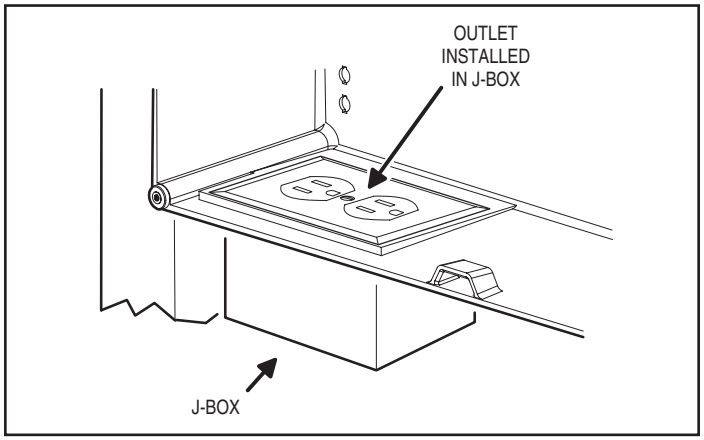

Figure 3. J-box Installed in Enclosure for AC Power

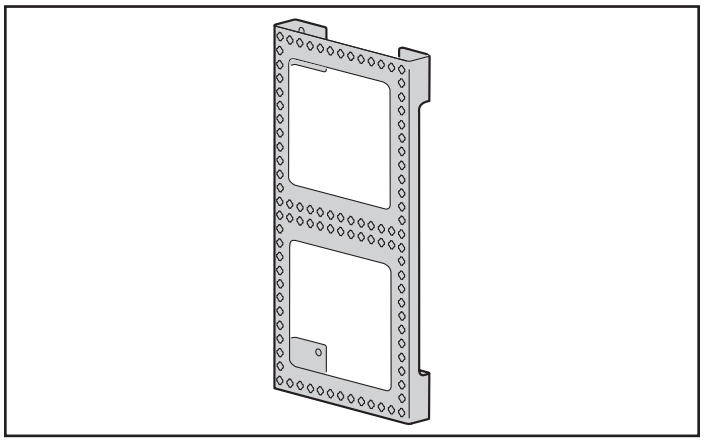

Figure 4. H275 Universal Mounting Bracket

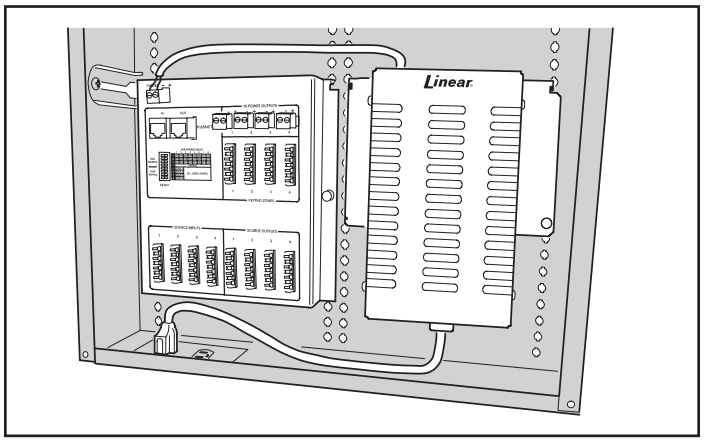

Figure 5. Hub and Power Supply Installation in Cabinet

Additional hubs and power supplies can be added to the system to increase the number of speaker zones available. Up to seven additional hubs can be connected for a maximum of 32 speaker zones.

Expansion hubs share the same four source inputs as the first hub and each control their own four speaker zones.

Expansion Hub Installation

Expansion hubs can be mounted near the first hub, or mounted in a remote location near the speaker zones to be controlled.

1. Mount the expansion hubs and power supplies in structured wiring enclosures or on the universal mounting brackets.
2. Connect the power supply output cable to each associated hub.
3. Use Cat-5 cables with RJ-45 connectors to interconnect each hub. Connect to the **HUBNET OUT** connector on the first hub, then to the **HUBNET IN** connector on the next hub. Continue interconnecting the hubs using the **HUBNET IN** and **OUT** connectors until all the hubs are connected.
4. Use Cat-5 cables to interconnect the hub sources. Each hub has four **SOURCE INPUT** and four **SOURCE OUTPUT** Type 110 punch-down connectors. Start at the first hub and connect cables to each of the **SOURCE OUTPUT** connectors. Route those cables to the next hub and connect them to the same source number **SOURCE INPUT** connectors. Continue interconnecting the hub source outputs and inputs until all the hubs are connected.
5. Set the Hub Numbers using positions 1-3 of the **SETUP** switch on each hub. **Each hub must be set to a unique number.**

SWITCH #	HUB NUMBER							
	1	2	3	4	5	6	7	8
1	OFF	OFF	OFF	OFF	ON	ON	ON	ON
2	OFF	OFF	ON	ON	OFF	OFF	ON	ON
3	OFF	ON	OFF	ON	OFF	ON	OFF	ON

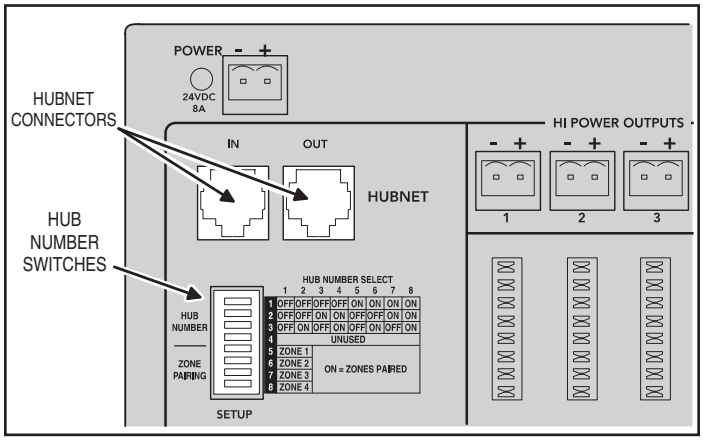

Figure 6. HUBNET Connector and Setup Switch

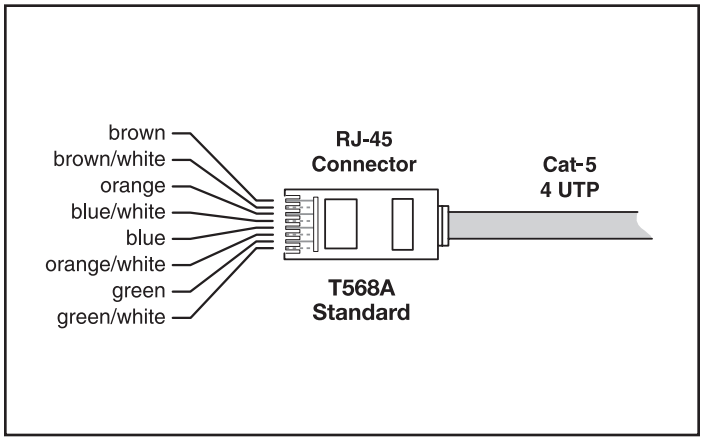

Figure 7. T-568A Wiring Standard for Cat-5 in RJ-45

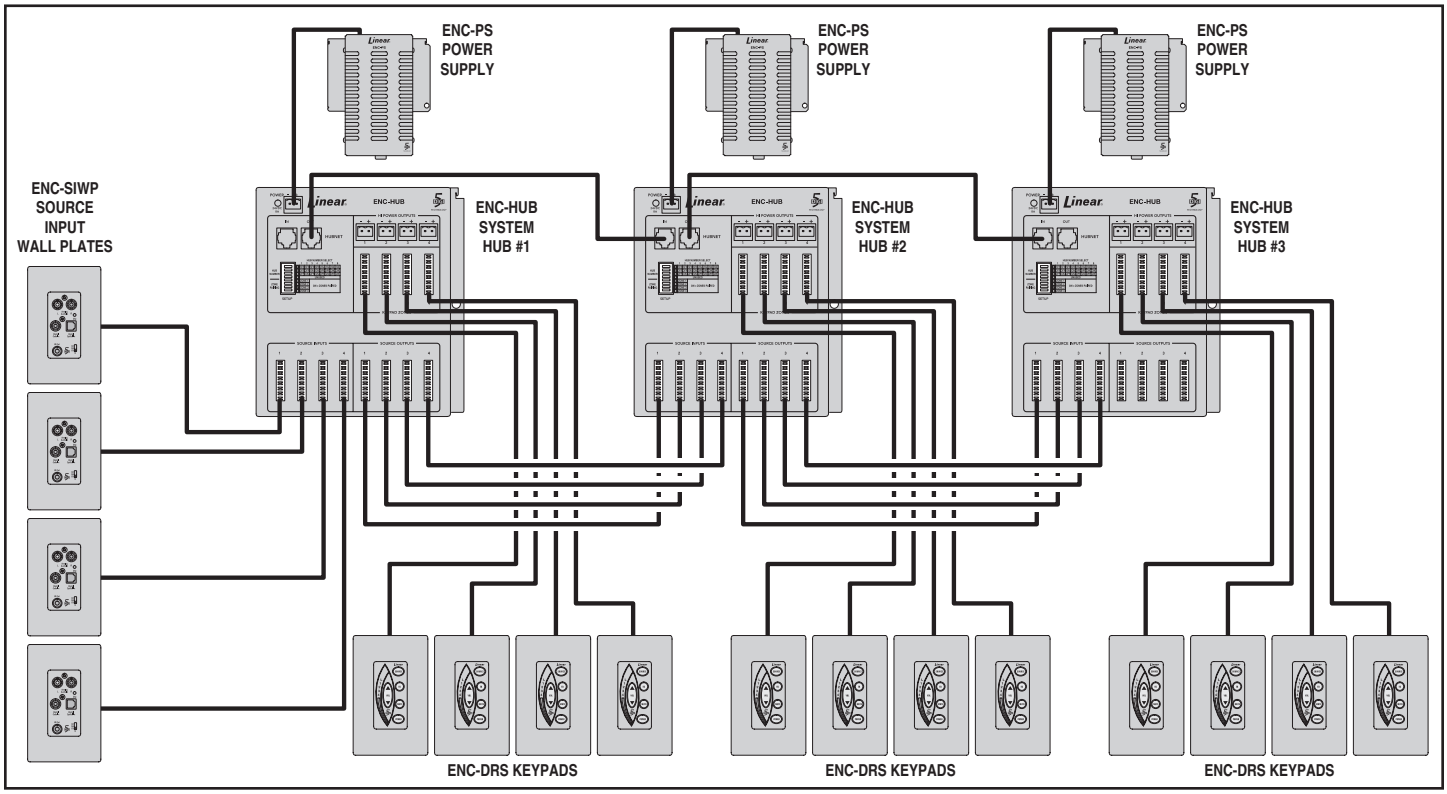

Figure 8. Example 3 Hub, 12 Zone System

Source Input Wall Plate Setup

The system supports up to four audio input sources. Each audio source component connects to a source input wall plate (Model ENC-SIWP).

The source input wall plates can connect to analog stereo audio, coaxial digital audio, or optical digital audio provided by the source component. The audio input type is selected by the input selector switch on the face of the wall plate.

Input Gain Switches

The source input wall plate has internal switches for adding gain to low level audio signals. In most cases these switches can be left in the OFF position for no increase in gain.

To add gain to the audio signal at the wall plate, set the switches as shown in the table below:

GAIN	SWITCH #			
	RIGHT CHANNEL		LEFT CHANNEL	
	1	2	3	4
+0db	OFF	OFF	OFF	OFF
+4db	ON	OFF	ON	OFF
+8db	OFF	ON	OFF	ON
+10db	ON	ON	ON	ON

The clipping indicator will light if the signal level is too high.

IR Out Connection

The source input wall plate features an **IR OUT** jack for connection to an infrared emitter. The infrared emitters have an adhesive back so they can be attached to the source component's faceplate near the component's infrared sensor. Each keypad has an infrared sensor that will repeat a remote control's signal using the emitters. This allows controlling the selected source component remotely from any keypad location.

Source Input Wall Plate Installation

Source input wall plates should be mounted in locations where audio source components will be placed. Each source component will have an audio connection to the wall plate using coax or optical cable, and an infrared emitter wire connection.

For installations where the audio source components are located in the same vicinity, a double, triple, or quad J-box can be used to mount multiple source input wall plates.

1. Determine the location for the source input wall plates and install one or more J-boxes.
2. Route Cat-5 cable from the hub to each of the source input wall plate locations.
3. Connect the cables to the Type 110 punch-down **SOURCE INPUT** connectors on the hub. Use Type RJ-45 connectors on the wall plate end of the cable.
4. Install the wall plate into the J-box and cover it using a Decora type wall plate.

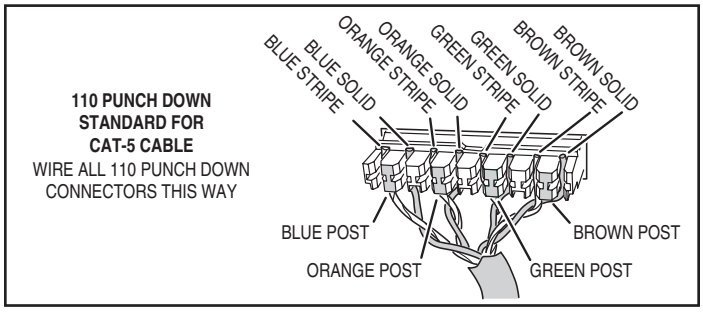

Figure 9. Source Input Wall Plate

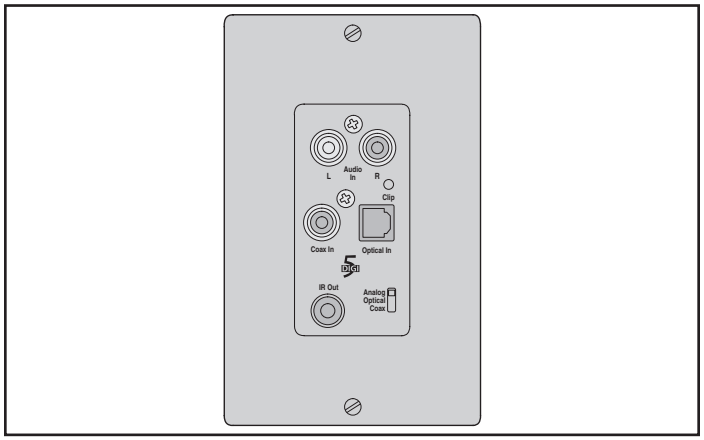

Figure 10. Source Input Wall Plate

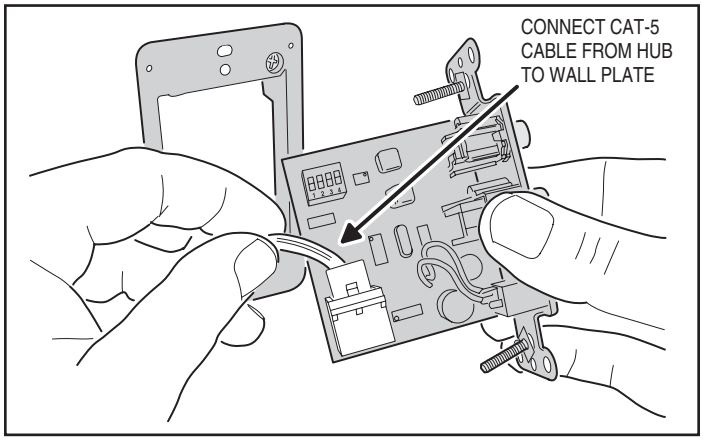

Figure 11. Source Input Wall Plate Connection

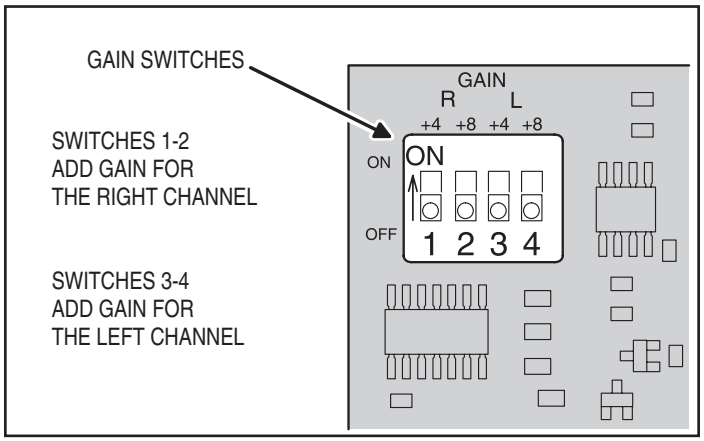

Figure 12. Source Input Wall Plate Gain Switches

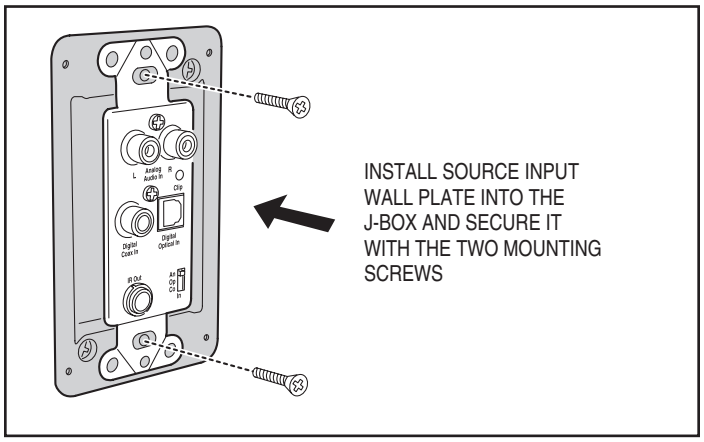

Figure 13. Source Input Wall Plate Mounting

The keypads (Model ENC-DRS) are wired to the hub with Cat-5 cable. Each keypad contains a Class-D digital amplifier and connects to a pair of stereo speakers.

Power for the keypad is normally supplied from the hub through the Cat-5 cable. As an option to support longer cable runs and to prevent voltage drop, the hub provides four **HI POWER** output terminals. The **HI POWER** terminals support 2-conductor 16-gauge wire, and are recommended for keypad installations greater than 150' from the hub or where maximum amplifier output will be required. See the table below for keypad power ratings and wiring lengths.

POWER WIRES TO KEYPAD		CONTINUOUS AVERAGE OUTPUT POWER PER CHANNEL (< 1% THD)	
CAT-5 ONLY LENGTH IN FEET	CAT-5 PLUS 16 GAUGE POWER WIRE FROM HUB	6-OHM LOAD	8-OHM LOAD
6 FEET	UP TO 150 FEET	40 Watts/CH	30 Watts/CH
50 FEET		29 Watts/CH	22 Watts/CH
100 FEET		23 Watts/CH	17 Watts/CH
150 FEET		17 Watts/CH	13 Watts/CH

Each keypad can connect to a local input wall plate (Model ENC-LIWP). The local input wall plate can be used for an audio source connection at the keypad's location. See the next section for installation of local input plates.

Keypad Installation

1. Determine the locations for the keypads. Be sure there is wiring access to the hub, the speakers, and the local input wall plates (if used).
2. Install a J-box about 56" to 60" above the floor level to mount the keypad.

➜ ***WARNING:*** *Do not mount the keypad in the same J-box as high voltage devices such as a light switch or outlet.*

3. Route Cat-5 cable from the hub location to the keypad J-box. If using the **HI POWER** hub outputs, also route 16-gauge 2-conductor wire from the hub to the keypad J-box.
4. Using a Type 110 punch-down tool, connect the keypad's Cat-5 cable to one of the **KEYPAD ZONE** terminals on the hub. If using the **HI POWER** hub outputs, connect the 2-conductor wire to one of the **HI POWER OUTPUT** terminals on the hub. **OBSERVE POLARITY!**
5. Connect the keypad end of the Cat-5 cable to the keypad's **J1 (HUB)** terminals. If using the **HI POWER** hub outputs, connect the 2-conductor power wire to the keypad's **TB1 (26 VDC)** terminals. **OBSERVE POLARITY!**

Optional External IR Target Connection

The keypads support connection to an external IR target. An external target is useful in some installations where the room layout requires a remote IR target distant from the keypad.

1. Mount the external IR target at the desired location.
2. Route cable for the external IR target from the target's location to the keypad J-box.
3. Connect the cable to the IR target and to the 3-pin header block supplied with the keypad.
4. Attach the 3-pin header block to the 3-pin **J3B** header on the keypad. Note: Red wire position (see Figure 16).

Speaker Connection

One pair of stereo speakers connects to the keypads.

1. Install the pair of speakers for the keypad's zone.
2. Route 16-gauge speaker cable from the speakers to the keypad J-box.
3. Connect the speaker cable at the speaker end and to the keypad's left and right speaker terminals. **OBSERVE POLARITY!**
4. Install the keypad into the J-box and cover it using a Decora® type wall plate.

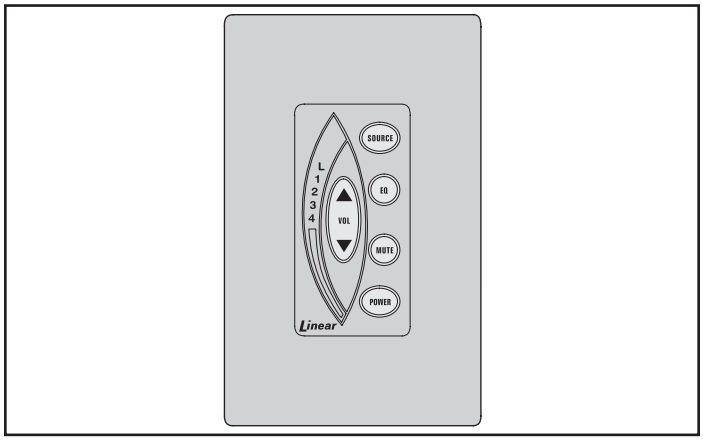

Figure 14. Keypad

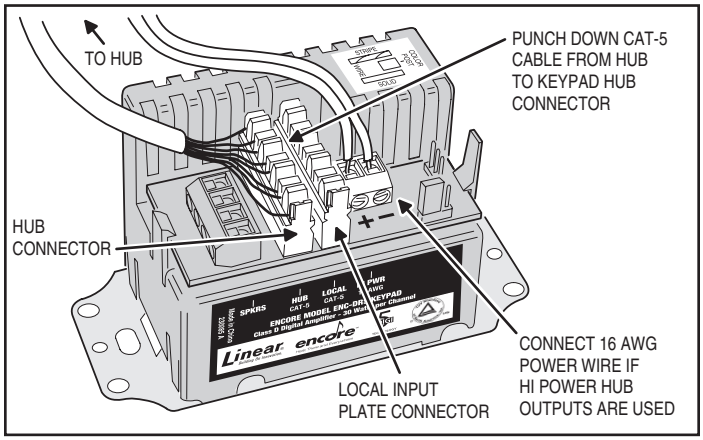

Figure 15. Keypad Connections

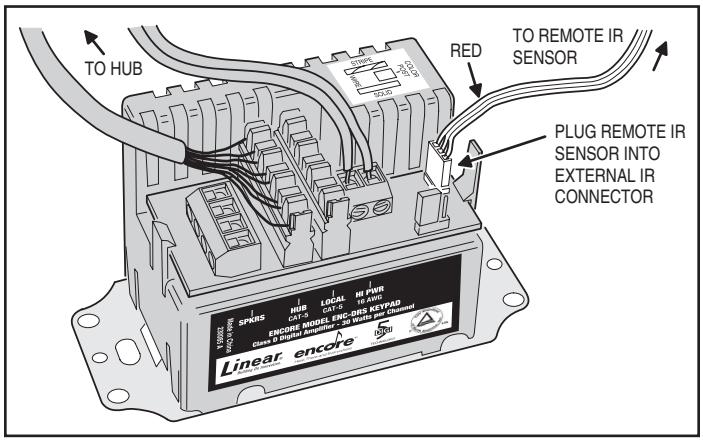

Figure 16. External IR Target Connections

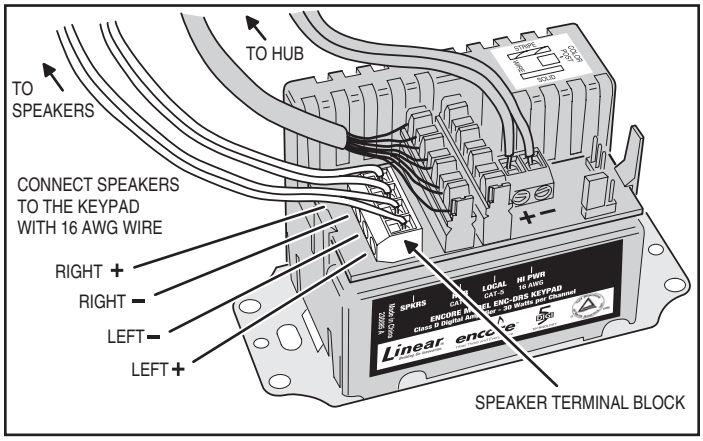

Figure 17. Speaker Connections

Local Input Wall Plate Setup

Each keypad supports an optional connection to a local input wall plate (Model ENC-LIWP). The local input plate provides a connection point for a local audio source in the same room as the speaker zone, such as an iPod, MP3 player, or a game box.

The local input wall plate connects directly to the keypad with Cat-5 cable and mounts in a single-gang J-box. It features two sets of stereo RCA analog audio inputs, a coaxial digital audio input, an SPDIF optical digital audio input, an IR emitter output jack, a source selector switch, gain switches, and a clipping indicator.

The input selector switch determines which input is active (Analog #2, Optical, or Coax). The Analog #1 input (the top two RCA jacks) has a special override feature. When an audio signal is detected at this input, it will override the other local wall plate inputs regardless of the position of the input selector switch. When the signal at the Analog #1 input ceases, after about 10 seconds, the local input wall plate will switch to the source determined by the position of the input selector switch.

Input Gain Switches

The local input wall plate has two sets of internal switches for adding gain to low level audio signals. Switch #1 is for Input #1, Switch #2 is for Input #2. In most cases these switches can be left in the OFF position for no increase in gain.

To add gain to the audio signal at the wall plate, set the switches as shown in the table below:

GAIN	SWITCH #			
	RIGHT CHANNEL		LEFT CHANNEL	
	1	2	3	4
+0db	OFF	OFF	OFF	OFF
+4db	ON	OFF	ON	OFF
+8db	OFF	ON	OFF	ON
+10db	ON	ON	ON	ON

The clipping indicator will light if the signal level is too high.

IR Out Connection

The local input wall plate features an **IR OUT** jack for connection to an infrared emitter. The infrared emitter has an adhesive back so it can be attached to the source component's faceplate near the component's infrared sensor. The keypad has an infrared sensor that will repeat a remote control's signal using the emitters. This allows controlling the selected source component remotely from any keypad location.

Local Input Wall Plate Installation

The local input wall plate is usually installed near the keypad.

1. Determine the location for the local input wall plate and install a J-box.
2. Route Cat-5 cable from the keypad to the local input wall plate J-box.
3. Connect the cable to the Type 110 punch-down **J2 (LOCAL)** connector on the keypad. (See Figure 15 for the connector location, see Figure 9 for the 110 punch down wiring standard.) Use a Type RJ-45 connector on the wall plate end of the cable.
4. Install the wall plate into the J-box and cover it using a Decora type wall plate.

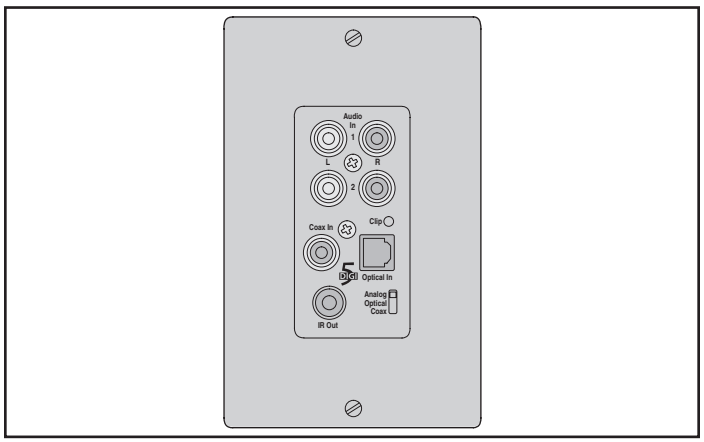

Figure 18. Local Input Wall Plate

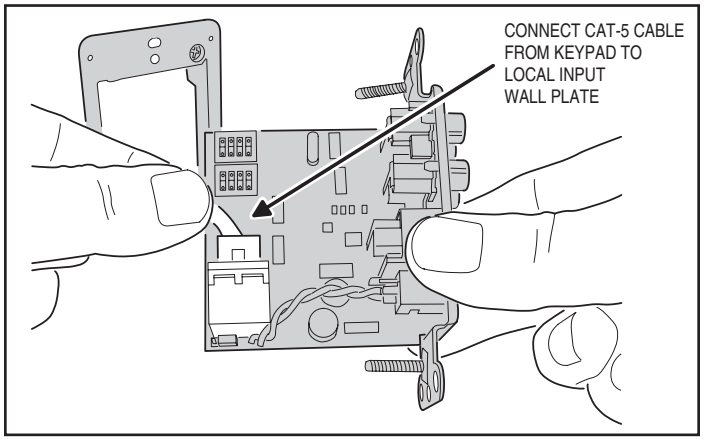

Figure 19. Local Input Wall Plate Connections

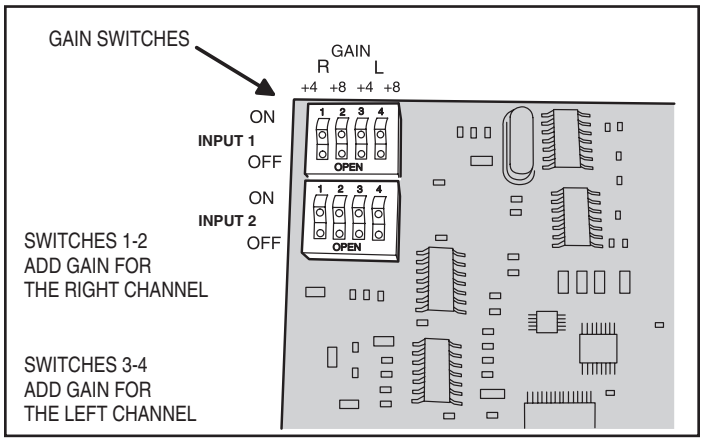

Figure 20. Local Input Wall Plate Gain Switches

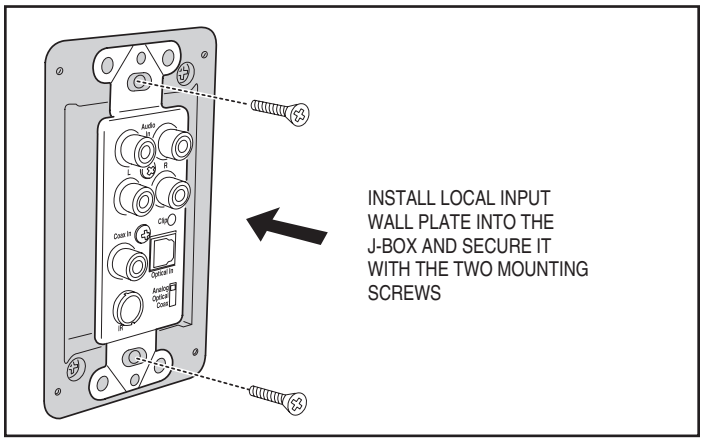

Figure 21. Local Input Wall Plate Mounting

After the installation is complete, the audio source components will need to be connected. After connecting the sources, the system will be ready to power-up.

Audio Source Component Connections

Audio sources can be connected to the source input wall plates with stereo coax cables, a digital coax cable, or an SPDIF optical digital cable.

1. Connect the audio output (analog or digital) of each audio source component to each of the source input wall plates.
2. Use the switch on the source input wall plates to select ANALOG, OPTICAL, or COAX to match the source input used.
3. Connect an IR emitter to each source input wall plate and affix the emitter to the audio source component's faceplate in the area of the components IR sensor (the exact position for the IR emitter on the component will require a little experimentation).
4. Turn on the audio source components and have them play audio to ready the system for testing

Connect Power

To ready the system for testing, power must be applied to the hub(s).

1. Plug all power supply line cords into the outlets that were installed.
2. Verify that the **POWER** indicator is lit on each hub installed. There also is a power indicator inside the power supply that can be seen through the case vents.

Basic System Testing

After applying power to the system, perform a basic system test at each keypad to verify that the system was wired correctly and that all components are functioning.

Go to each keypad and perform these tests:

1. Press the **POWER** button. The keypad keys should light.
2. Press the **SOURCE** button to cycle through the sources. Verify that the source indicators cycle through the source numbers.
3. Listen for audio from each of the sources. Use the **VOL** up and down button to adjust the keypad's volume. Verify the sound quality.
4. Press the **POWER** button to turn off the keypad.

Refer to the User's Guide for detailed system operation instructions.

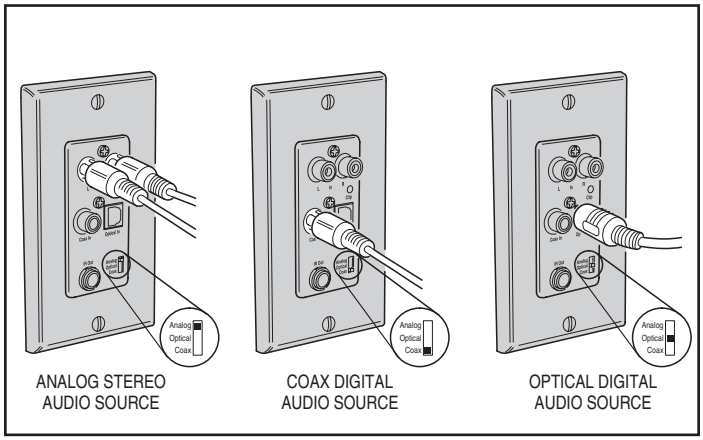

Figure 22. Audio Source Connections

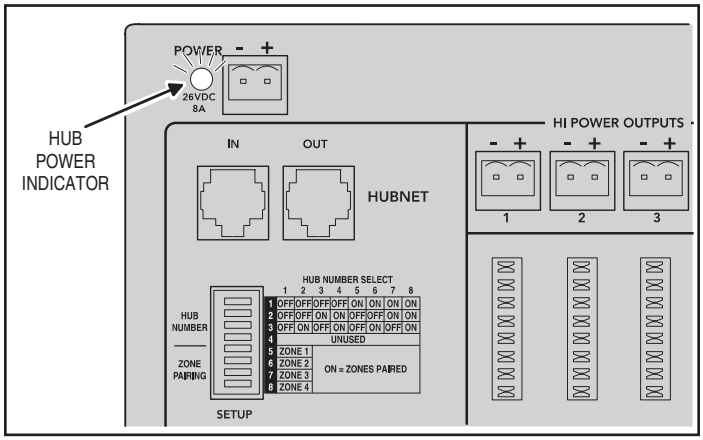

Figure 23. Hub Power Indicator

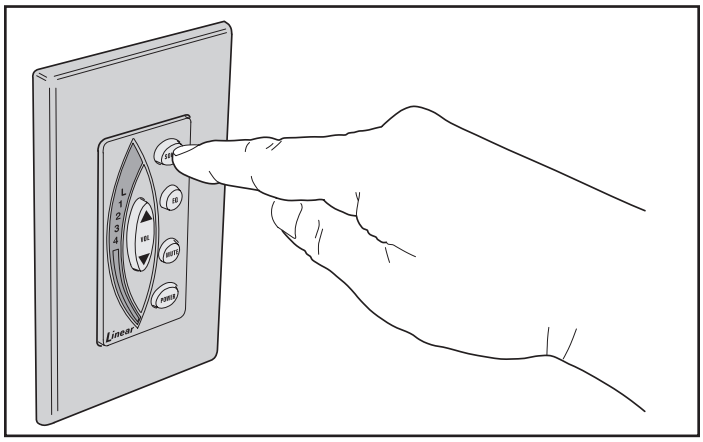

Figure 24. Basic System Testing

Specifications

Amplified Keypads	
Continuous Average Output Power, 8 Ω (1 kHz sinewave, 2 channels driven 1% THD)	60 W (2 x 30 W)
Dynamic Range	96 db

Source Inputs	
Source Input Impedance	50 k Ω
Source Input Overload	2.4 Vrms
Sampling Frequency	48 kHZ
Audio Resolution	24 Bit Stereo

Emitter Outputs (1 for each source input)	
Output Drive Current	12 mA
Output Drive Voltage	12 VDC

Power Supply	
Input	120 VAC 60 Hz, 1.2 A Avg.
Output	26 VDC
Power Consumption Maximum	200 W
Power Consumption Standby	20 W

Regulatory	
USA	TUV
Canada	TUV

Physical Dimensions (D x W x L)	
ENC-PS	2.1” x 6.3” x 8.5”
ENC-HUB	1.9” x 6.3” x 6.8”
ENC-DRS	2.6” x 1.8” x 4.1”
ENC-SIWP	2.9” x 1.3” x 4.1”
ENC-LIWP	2.9” x 1.3” x 4.1”

Limited Warranty

This Linear product is warranted against defects in material and workmanship for twenty four (24) months. **This warranty extends only to wholesale customers** who buy direct from Linear or through Linear’s normal distribution channels. **Linear does not warrant this product to consumers.** Consumers should inquire from their selling dealer as to the nature of the dealer’s warranty, if any. **There are no obligations or liabilities on the part of Linear LLC for consequential damages arising out of or in connection with use or performance of this product or other indirect damages with respect to loss of property, revenue, or profit, or cost of removal, installation, or reinstallation.** All implied warranties, including implied warranties for merchantability and implied warranties for fitness, are valid only until the warranty expires. **This Linear LLC Warranty is in lieu of all other warranties express or implied.**

All products returned for warranty service require a Return Product Authorization Number (RPA#). Contact Linear Technical Service at 1-800-421-1587 for an RPA# and other important details.

Linear®
Building On Innovation.
USA & Canada (800) 421-1587 & (800) 392-0123
(760) 438-7000 - Toll Free FAX (800) 468-1340
www.linearcorp.com

Copyright © 2009 Linear LLC