CHAMBERLAIN®
LiftMaster®
PROFESSIONAL

Installation and Maintenance Instructions

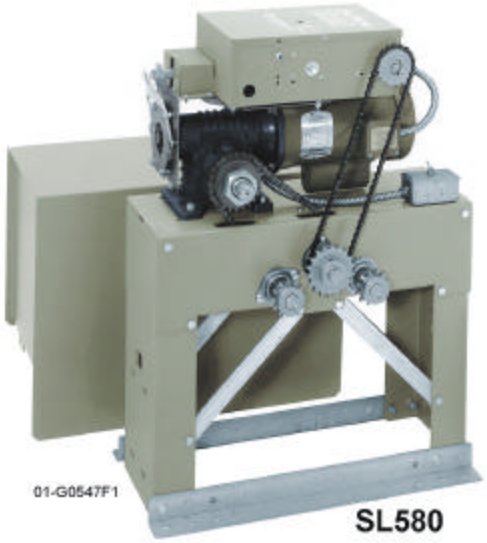

Model SL580

Heavy Duty Slide Gate Operator

Model SL590

Heavy Duty, Harsh Environment Slide Gate Operator

Doc 01-G0547
Rev D

Contents

General Information ***4***

Supplied Parts 4

Model Classifications 4

Specifications 5

Operator Dimensions 6

Cycle Rates 6

Safety Information ***7***

Safety Instructions 7

Safety Precautions for Open-Roller Gates and Ornamental “Grill Type” Gates 9

Pre-Installation Check-List ***11***

Wiring Specifications 11

Features ***13***

Operator Features 13

System Features 15

Installation ***17***

Step 1: Set Up Post or Pad Mounting 17

Step 2: Mounting the Operator 19

Step 3: Gate Brackets 19

Step 4: Drive Chain 20

Electrical Disconnect Switch 21

Step 5: Electrical Power Connections 21

Step 6: Limit Switch Adjustments 22

Programming ***23***

Switch #1: Operator Programming 23

Switch #2: Timer to Close 24

Adjustments and Check Out ***25***

Clutch Adjustment 25

Preliminary System Check Out 25

Controls and Accessory Installation ***26***

Troubleshooting ***27***

1. Power 27

2. Accessories 28

3. Primary Voltage Circuit 28

4. Low Voltage Circuit 29

Gear Reducer 30

General Reference Information 30

Features and Program Troubleshooting Review 30

Required Maintenance – Normal Usage ***31***

SL580/590 Parts List & Drawings ***32***

SL580 Exploded View 32

SL580 Parts List 33

SL590 Exploded View 35

SL590 Parts List 36

Warranty Policy ***38***

General Information

Supplied Parts

Inspect the operator for possible shipping damage and shortage of parts. Some ordered accessories may be packed separately.

For Models SL580 & SL590

PART #	DESCRIPTION	QTY.	PART #	DESCRIPTION	QTY.
01-G0547	SL580 & SL590 MANUAL	1	82-QN43-12	7/16-14 x 3/4 SQUARE HEAD BOLT	4
01-G0582	GATE SAFETY INSTR.	1	84-RH-50	1/2-13 HEX NUT	4
02-401-SP	STOP BUTTON	1	84-WH-31	5/16-18 SERRATED FLANGED LOCK NUT	8
10-3209	GATE BRACKET	2	84-WH-38	3/8-16 SERRATED FLANGED LOCK NUT	8
11-3503	TAKE UP BOLT	2	85-FW-38	3/8 FLAT WASHER	8
19-3025	#50 CHAIN	1	85-FW-50	1/2 FLAT WASHER	4
80-3001	5/16-18 U-BOLT	4	85-LS-50	1/2 SPLIT LOCK WASHER	4
80-3002	3/8-16 U-BOLT	4	40-3505	WARNING SIGN	2

Table 1

Model Classifications

RESIDENTIAL VEHICULAR GATE OPERATOR: CLASS 1

A vehicular gate operator or system intended for use in a home of one to four single family dwelling or a garage or parking area.

COMMERCIAL/GENERAL ACCESS VEHICULAR GATE OPERATOR: CLASS 2

A vehicular gate operator or system intended for use in a commercial location or building such as a multi-family housing unit of five or more single family units, hotel, garages, retail store, or other building servicing the general public.

INDUSTRIAL/LIMITED ACCESS VEHICULAR GATE OPERATOR: CLASS 3

A vehicular gate operator or system intended for use in an industrial location or building such as a factory or loading dock area or other locations not intended to service the general public.

RESTRICTED ACCESS VEHICULAR GATE OPERATOR – CLASS 4

A vehicular gate operator or system intended for use in a guarded industrial location or building such as an airport security area or the other restricted access location not servicing the general public, in which unauthorized access is prevented via supervision by security personal.

MODEL	CLASS 1	CLASS 2	CLASS 3	CLASS 4
SL580	▯	▯	▯	▯
SL590	▯	▯	▯	▯

Table 2

TYPES OF SLIDE GATES

These gate operators are intended t be used with slide gates of the following type: Track mounted, overhead, cantilever, and track guided v-track.

Specifications

Model	H.P.	Gate Speed	Max. Gate Weight	Max. Cant'l. Width	Max. O/H Width	Max. V-Track Width
SL580	½	11"/sec.	1000 lbs.	25 ft.	45 ft.	35 ft.
SL580	¾	11"/sec.	1300 lbs.	30 ft.	60 ft.	45 ft.
SL580	1	11"/sec.	1600 lbs.	35 ft.	70 ft.	50 ft.
SL580	1-1/2	11"/sec.	1900 lbs.	40 ft.	80 ft.	60 ft.
SL590	½	12"/sec.	1100 lbs.	25 ft.	45 ft.	35 ft.
SL590	¾	12"/sec.	1400 lbs.	30 ft.	60 ft.	45 ft.
SL590	1	12"/sec.	1700 lbs.	35 ft.	70 ft.	50 ft.
SL590	1-1/2	12"/sec.	2100 lbs.	40 ft.	80 ft.	60 ft.
SL590	2	12"/sec.	2500 lbs.	45 ft.	90 ft.	70 ft.

Table 3

Operator Dimensions

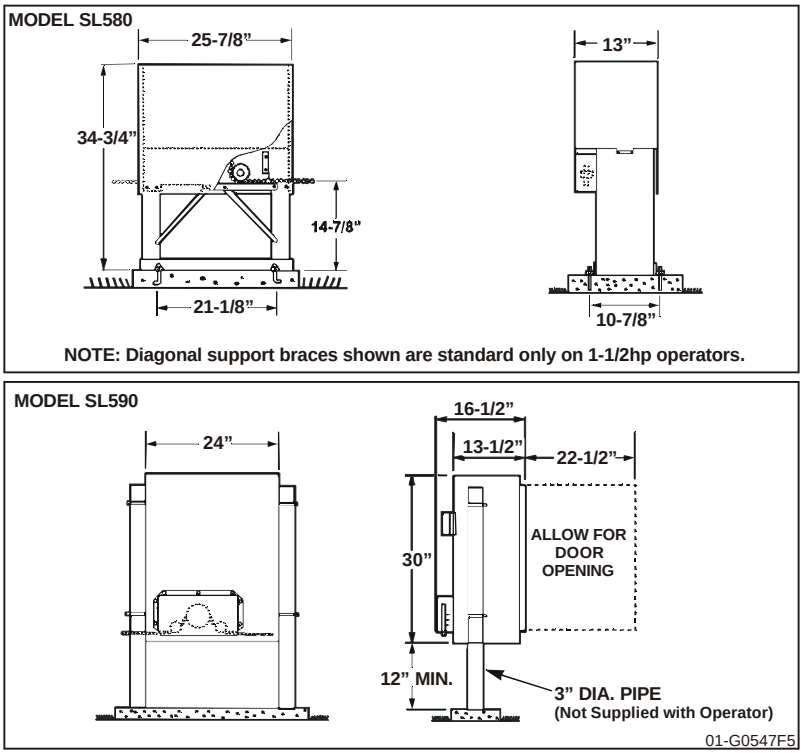

Figure 1

Cycle Rates

MODEL	APPLICATIONS	CYCLE RATE PER HOUR
SL580	Heavy Duty, Industrial	20
SL590	Heavy Duty, Industrial with Harsh Environment	25
Cycle = One full open and one full close.		

Table 4

Safety Information

Vehicular gate systems provide convenience and security. Gate systems are comprised of many component parts. The gate operator is only one component. Each gate system is specifically designed for an individual application.

Gate operating system designers, installers and users must take into account the possible hazards associated with each individual application. Improperly designed, installed or maintained systems can create risks for the user as well as the bystander. Gate systems design and installation must reduce public exposure to potential hazards.

A gate operator can create high levels of force, in its function as a component part of a gate system. Therefore, safety features must be incorporated into every design. Specific safety features include:

- Gate Edges
- Guards for exposed rollers
- Screen Mesh
- Enclosed Track
- Photo-electric Sensors
- Vertical Posts
- Instructional and Precautionary Signage

Important instructions follow. These instructions are intended to highlight certain safety related issues. These instructions are not intended to be comprehensive. Because each application is unique, it is the responsibility of the purchaser, designer, installer and end user to ensure that the total gate system is safe for its intended use.

Safety Instructions

Select instructions are highlighted with this precautionary symbol (see left margin). Failure to follow these selected instructions can result in serious injury or death.

STEP 1: BEFORE INSTALLATION

1. Confirm gate operator model is specified by Installation and Maintenance Manual for application type, gate size and frequency or use.
2. Confirm ALL appropriate safety features, such as gate edges, photo-electric sensors, vertical posts and enclosed tracks, are specified.
3. Confirm gate system design reduces pinch points and protects against entrapment.
4. Confirm gate system design has pedestrian access separate from vehicular entrance.
5. Confirm gate system design reduces traffic backup.
6. Confirm warning signage is included in design.
7. Confirm gate moves freely before installation of operator
8. Repair or service worn or damaged gate hardware before installation of operator.
9. To avoid installation hazards, review the gate system operation and installation procedures, such as manual disconnect mechanism procedure.
10. Confirm control design prohibits unauthorized use.

STEP 2: DURING INSTALLATION

1. Disconnect power at service panel before making any electrical connection.
2. Avoid pinch points, be aware of all moving parts.
3. Adjust clutch or load sensing device to minimum force setting.
4. Do not over-tighten cutch or adjust force setting above minimum.
5. Install controls where user cannot touch gate while operating controls.
6. Install controls where user has full view of gate operation.
7. Install two or more warning signs on the gate to alert persons in the area of automatic gate operation. Warning signs must be conspicuous.
8. Install operator inside fence line. DO NOT install operator on public side of fence line.
9. Secure gate operator cover.

STEP 3: AFTER INSTALLATION

1. Test all safety features.
2. Train end user about basic functions and safety features of gate system.
3. Leave Installation and Maintenance Manual and Safety Instructions with end user.

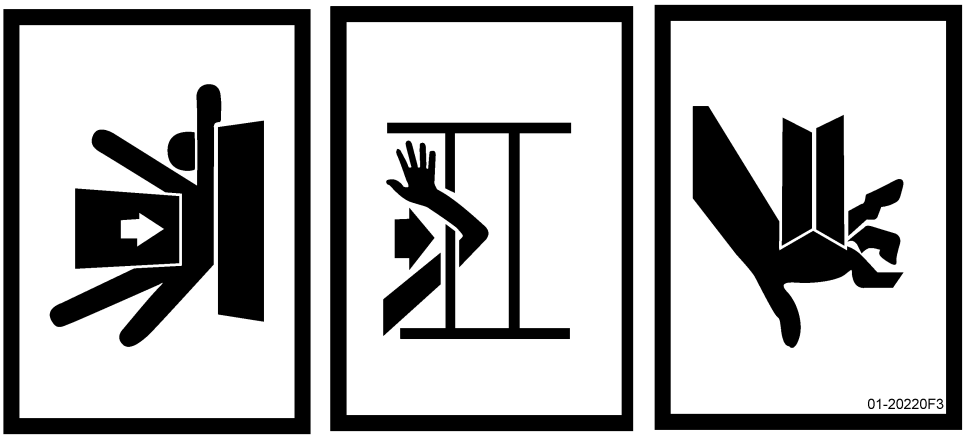

Safety Precautions for Open-Roller Gates and Ornamental “Grill

OPEN-ROLLER GATES

Injuries occur when people get their or feet caught between the top or bottom of the gate and the gate roller. This potential pinch-point should be guarded against at all times. Enclosed style gate tracks are available for refitting of these rollers from many fence suppliers. Also, roller guards are available for installing over the rollers.

One more contact sensors shall be located at the leading edge, trailing edge, and post-mounted both inside and outside of a vehicular horizontal slide gate.

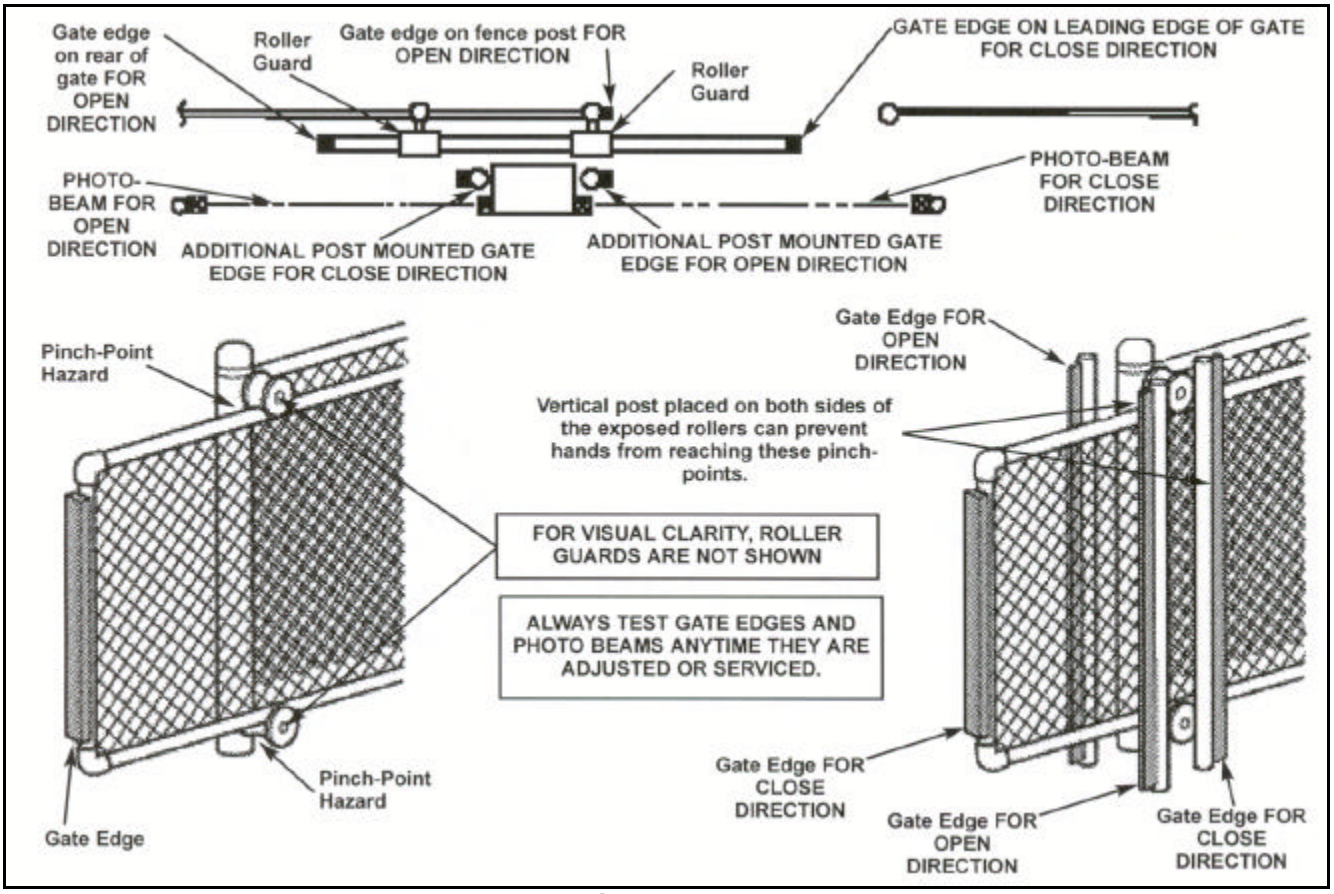

Figure 2

ORNAMENTAL “GRILL TYPE” GATES

Injuries occur when people put their hands and arms through openings in the grill and the gate is operated. They cannot retract their arm and it gets caught between the moving gate grill and the stationary fence post or fence. This potential hazard can be averted by placing a 4’ screen mesh on the gate to prevent access through openings anywhere the gate may travel. See *Safety Brochure* for details.

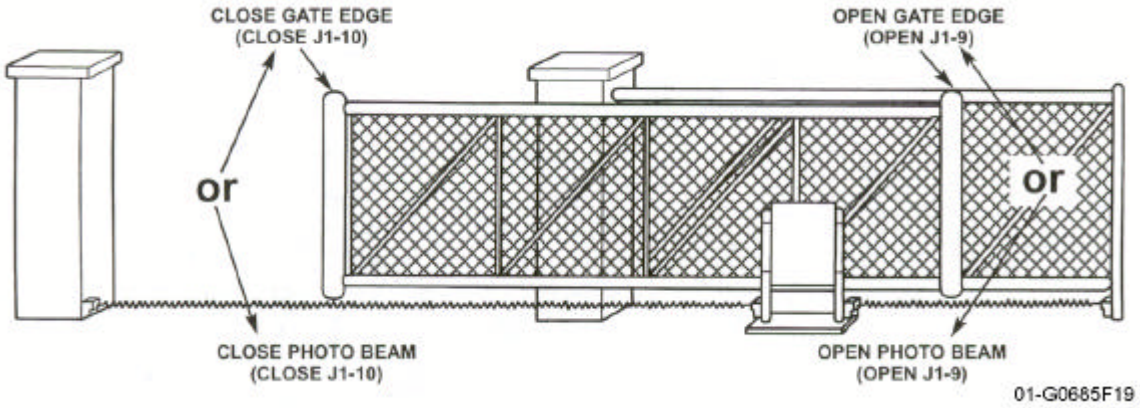

Figure 3

Pre-Installation Check-List

Φ Check the gate. It **must** operate smoothly and freely. If necessary, lubricate, adjust, or repair the gate prior to operate installation. The gate **must** be level and plumb.

Φ Some gates may only be as wide as the gate opening. They may require a back frame to be constructed to allow for chain attachments.

Φ Double check the size and weight of the gate to make sure that this operator is proper for this application.

Φ If wiring has already been installed, check to make sure it meets the following specification and requirements.

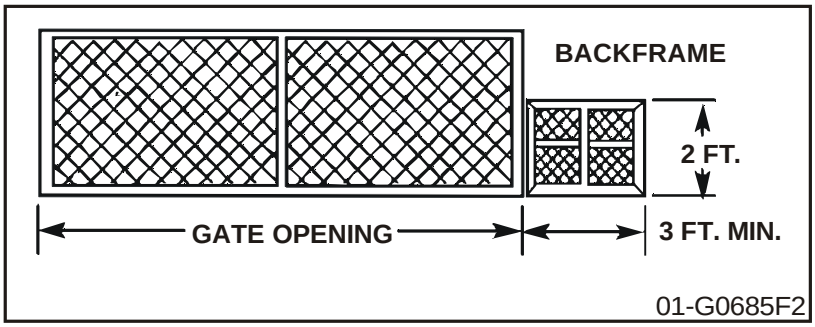

Figure 4

Wiring Specifications

Refer to Table 5.

A. The distances shown in Table 5 are measured in feet from the operator the power source.

B. These calculations are based on the National Electrical Code and allows for a 5% voltage drop.

C. Supply voltage must be within 10% of the operator's rating under load conditions.

D. There calculations are based on stranded copper wire.

E. It is highly recommended that only 90% of the distances shown be used; this will allow for a 10% safety factor.

F. For dual units, the distance shown should be cut in half.

G. Permanent wiring is to be employed as required by local codes.

H. All local codes must be strictly adhered to. It is very important that operator is properly grounded.

I. Do not run control wires in the same conduit with power wires.

J. Do not run multi conductor or parallel conductor cable for controls.

K. All power wiring should be dedicated and protected.

		Single Phase		3 Phase		
WIRE GAUGE	**HP**	**115 VAC**	**230 VAC**	**230 VAC**	**460 VAC**	**575 VAC**
6	1/3	684	3,077	4,737	14,211	35,527
	1/2	473	2,051	2,842	14,211	17,764
	3/4	324	1,231	2,030	7,105	11,842
	1	237	947	1,421	5,684	8,882
	1-1/2	158	648	947	4,060	5,921
	2	--	437	711	2,842	4,441
8	1/3	432	1,942	2,990	8,969	22,422
	1/2	299	1,295	1,794	8,969	11,211
	3/4	204	777	1,281	4,484	7,474
	1	149	597	897	3,587	5,605
	1-1/2	100	409	589	2,562	3,737
	2	--	299	448	1,794	2,803
10	1/3	271	1,218	1,876	5,627	14,068
	1/2	187	812,	1,125	5,627	7,034
	3/4	128	487,	804	2,814	4,689
	1	94	375,	563	2,251	3,517
	1-1/2	62	256	375	1,608	2,345
	2	--	187	281	1,125	1,758
12	1/3	170	763	1,175	3,524	8,810
	1/2	117	509	705	3,524	4,405
	3/4	80	305	503	1,762	2,937
	1	59	235	352	1,410	2,203
	1-1/2	39	161	235	1,007	1,468
	2	--	117	175	705	1,101

Table 5

NOTE: Calculated using NEC guidelines. Local codes and conditions must be reviewed for suitability of wire installation. Master/Slave units must be installed on separate circuits.

Control Wiring		
Volt	**Max. Dist. (Ft.)**	**Wire Gage**
24	1000	18

Table 6

Features

Operator Features

SOLENOID ACTIVATED, CALIPER DISC BRAKE

The brake (Figure 5) minimizes overtravel caused by gate coasting. An added feature of the brake is to assist in preventing backdriving of the gate.

The brake is spring applied whenever the motor is not running. Anytime the motor is running, the electric solenoid physically releases the brake.

Important: periodically check and adjust the brake mechanism. See page 31.

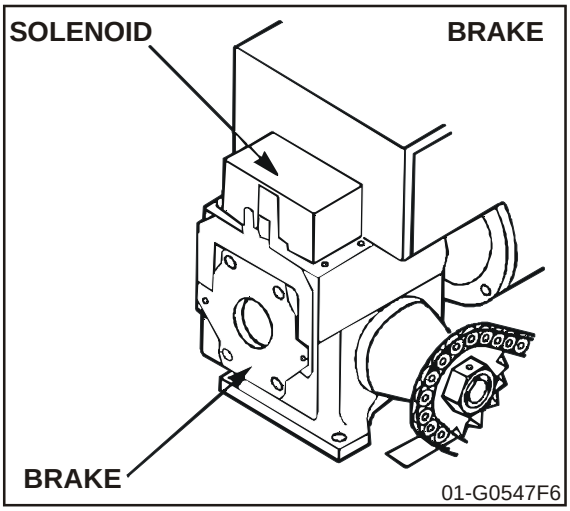

Figure 5

PRESSURE TYPE SLIPPING CLUTCH

The operator clutch mechanism (Figure 6) works similar to that of a clutch in a car. It allows the operator to gradually start the gate moving, rather than trying to instantaneously start moving the gate.

This clutch mechanism **must** be adjusted properly. During the installation of the operator, you **must** tighten the clutch spring lock nut so it is tight enough to operate the gate, yet loose enough so that if the gate meets an obstruction, the clutch will slip easily.

This clutch system will require periodic maintenance. See page 31.

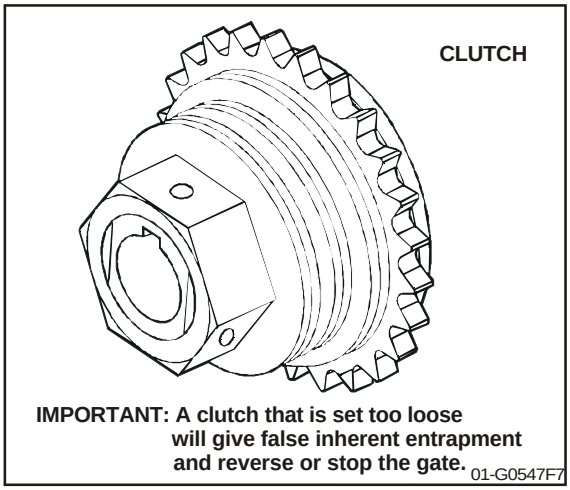

Figure 6

WARNING

This friction clutch system is not an automatic reversing device. It only serves to minimize damage to the gate operator and gate, and also to hopefully minimize vehicle damage. If you need an external automatic obstruction sensing device, items such as gate edges and photo beams are available to help protect pedestrians.

MANUAL OPERATION

The gate cannot be moved manually when the operator drive mechanism is connected to it. To disconnect the gate from the drive system, follow the directions below and refer to Figure 7.

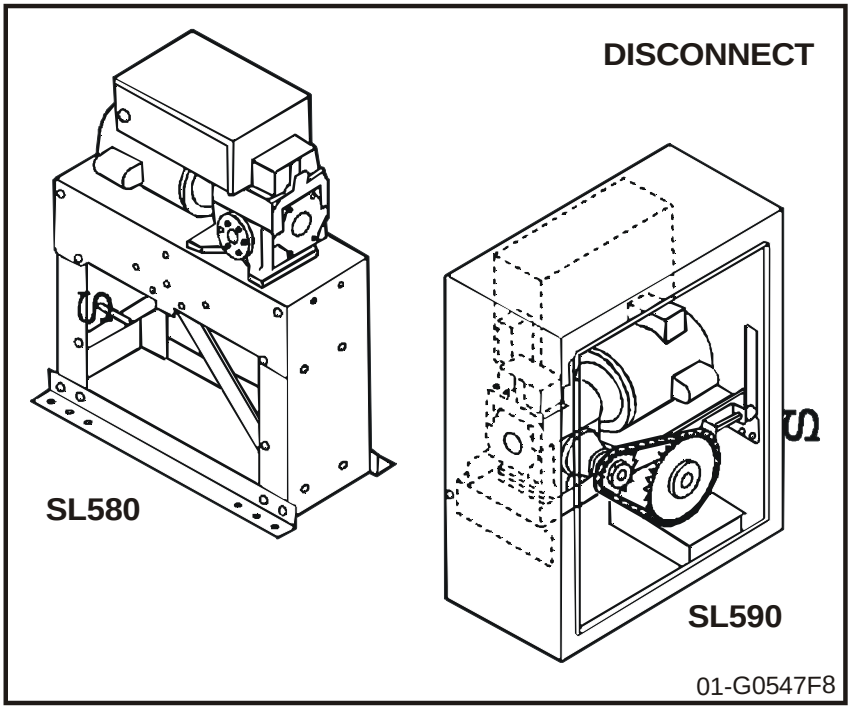

Figure 7

MODEL SL580 – Slide out the lock bar located underneath the cover and remove the cover. Pull the disconnect chain and engage it in the slot provided. The gate may now be moved manually.

To re-engage the operator, release the chain from the slot. The lock bar has provisions for a padlock to prevent tampering with the operator.

MODEL SL590 – Open the hinged door and pull the disconnect lever and lock it in place. The gate may now be moved manually.

To re-engage the operator, release the lever and close the door. The door has provisions for a padlock to prevent tampering with the operator.

NOTES: On both models, when the operator is under load, you may find it necessary to relieve the tension on the drive chain before disengaging the system. This may be accomplished by firmly applying pressure in a downward motion to the drive chain with your foot. You may also relieve pressure by rotating the external gear reducer shaft, extending through the brake.

Manual Disconnect does not prevent motor from running.

System Features

ACTIVITY LED

- Steady indication when gate is at either open or close limit.
- 1 flash per second when gate is off a limit in normal operation
- 2 flashes per second when entrapment level one has occurred.

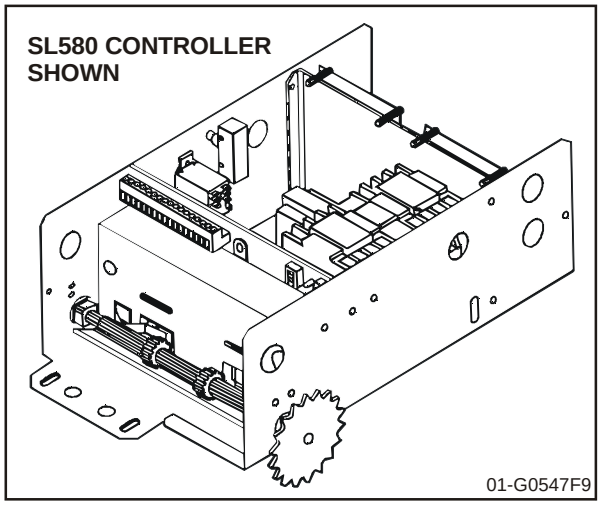

Figure 8

AUDIBLE WARNING DEVICE

If the operator should have a second inherent obstruction in sequence with the first; i.e. back to back, the sounder will activate. Also the sounder can be programmed to come on 2 seconds prior to gate movement and stay on during gate movement.

THREE BUTTON CONTROL (SEQUENCE OF OPERATION)

Open, stop, close, close is programmable. Stop will override all other functions. If closing, open will cause the operator to stop and reverse to full open. Will close from open limit or midstop only. If SW1 pin 1 is on three button station will only close the operator from the open limit or from mid-stop. If SW1 pin 1 is off, the input will work as a single button (open, close, stop).

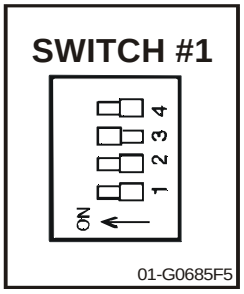

Figure 9

SINGLE BUTTON CONTROL (SEQUENCE OF OPERATION)

Open to open limit, close open. If power has been interrupted, will always open with first activation.

CLOSE SINGLE BUTTON SELECT

The single button (programmable) control can be programmed to either function as a single button control or to function as a close button only.

DIGITAL MICROPROCESSOR

This is the main circuit board for the operator. It contains all the logic and intelligence for the system. All the system programming is done on this circuit board. All solid state, with an emergency back-up system that works even if the processor is missing.

INHERENT OBSTRUCTION PROTECTION

The limit shaft is equipped with an R.P.M. sensor. When the gate meets an obstruction, the loss of r.p.m's. will cause the gate to reverse. A second obstruction will cause the gate to stop. A renewed wired input will restart the gate.

EXTERNAL OBSTRUCTION CIRCUIT

This circuit can be used with either a gate edge or a photo beam system. When either of the two devices mentioned are activated, the operator will react in a similar manner to the inherent obstruction described above.

NOTE: If external entrapment protection is required by the class of operator, both an open and closed protection device must be used.

SPECIAL NOTE ABOUT OBSTRUCTION SENSING FROM EITHER INTERNAL OR EXTERNAL SYSTEMS

The operator will stop if it senses two sequential obstructions. If will not activate form any automatic system, including the built in time delay to close. Either a manual device such as a pushbutton within site of the gate and operator, or the stop button supplied with the operator must be activated to resume the operator back to its normal operation.

OPEN ONLY CIRCUIT

Separate open circuits for line-of sight devices and out-of-sight devices such as open loops or radio controls.

LOOP CONTROL CIRCUITS

Vehicle control devices such as opening or security loop detectors are connected to this circuit

TIME DELAY TO REVERSE CIRCUIT

Allows the gate to come to a complete stop before reversing direction. Approximately ½ second between stop and reverse.

NOTE: This feature is defeated when either the inherent or external obstruction circuits are activated.

Installation

Please note that there are two basic types of power unit mounting, concrete pad or post mounting. Choose the proper mounting for your application. The installation illustrations shown are for right hand units; for left hand units, everything will be just the opposite.

If there is existing concrete at the area of power unit mounting, use the dimensioning procedure called out in pad mounting instructions. It is suggested that ½" threaded anchors (not supplied) be used to secure the unit. If needed, shim the unit to **ensure that it is level and parallel with the gate.**

Step 1: Set Up Post or Pad Mounting

CONCRETE PAD: SL580 ONLY

1. Layout concrete pad as detailed.
2. Locate electrical conduit, as required, prior to pouring concrete.
3. Pour concrete, insuring that pad is level and above the ground line.
4. Locate four (4) 1/2" threaded anchors, not supplied, as detailed. **Important:** Anchors must be positioned accurately and securely in concrete.
5. Allow concrete to set for at least two days before installing power unit.

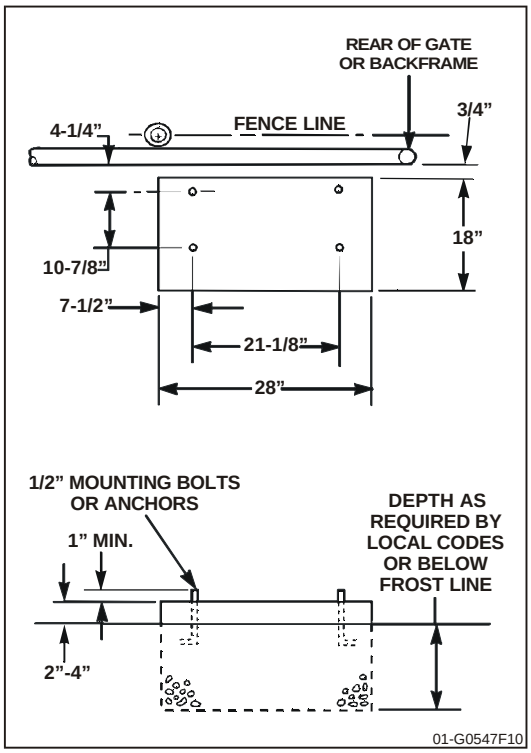

Figure 10

POST MOUNTING: SL580 ONLY

1. Locate and secure two posts, 3” O.D. heavy wall pipe.
2. Remove the mounting angles from base of power unit. Use the angles to maintain the proper distance between posts. Secure the angles to the posts using U-bolts.
3. Check that:
   - ✓ Each post is the same distance from the gate.
   - ✓ That the distance between the posts is 24-1/8”.
   - ✓ The post height is at least 15” from the ground.
   - ✓ Tops of posts are level with each other.
4. Locate conduit, as required.
5. Allow concrete to set at least two days before installing power unit.

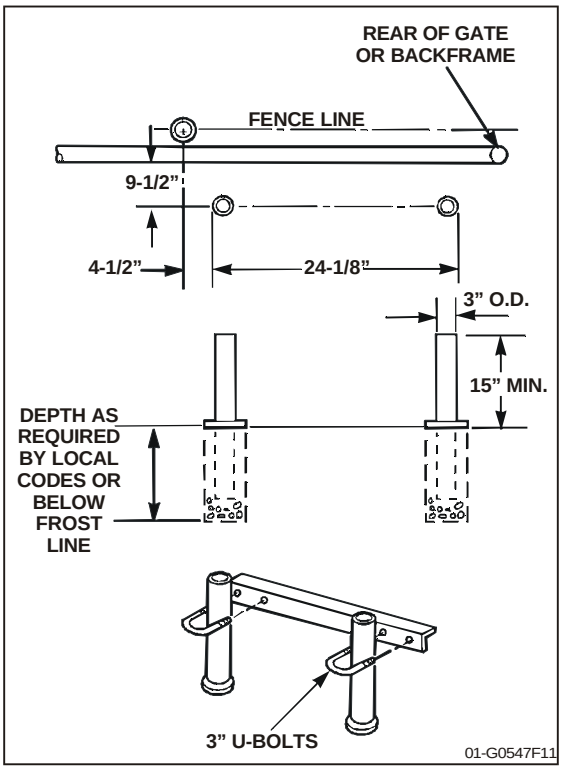

Figure 11

POST MOUNTING: SL590 ONLY

1. Locate and secure two posts, 3” O.D. heavy wall pipe.
2. Check that:
   - ✓ Each post is the same distance from the gate.
   - ✓ That the distance between the posts is 24”.
   - ✓ The post height is at least 42” from the ground.
   - ✓ Tops of posts are level with each other.
3. Locate conduit, as required.
4. Allow concrete to set at least two days before installing power unit.

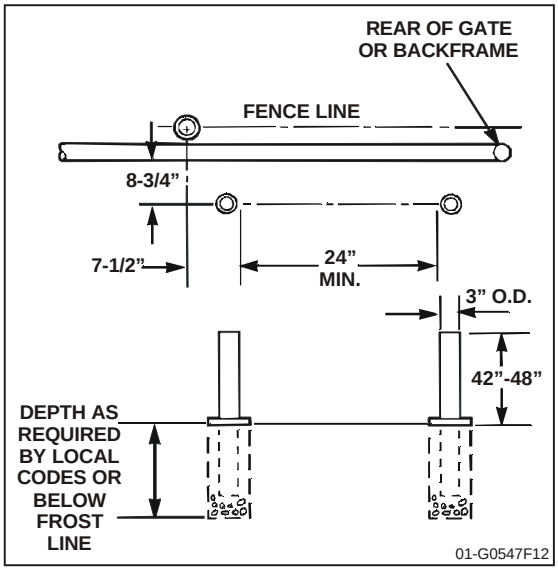

Figure 12

Step 2: Mounting the Operator

For all mounting styles, it is very important that the operator is level and parallel to the gate.

PAD MOUNT: SL580 ONLY

After concrete has set, carefully secure operator to the concrete pad with drive and idler sprockets facing gate. The ½" L-bolts will protrude through the holes in the mounting flanges and should be secured with lockwashers and hex nuts (not provided).

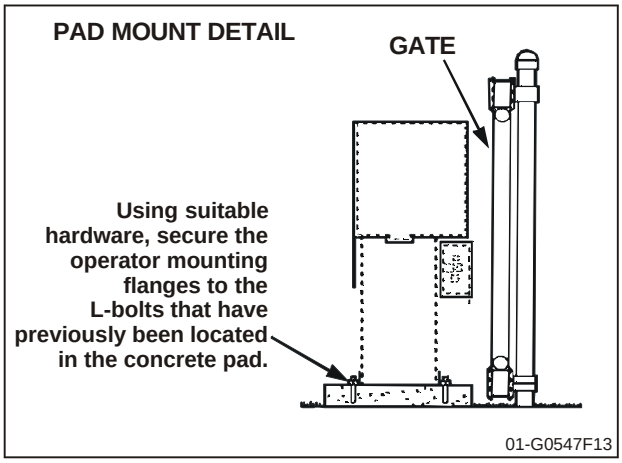

Figure 13

POST MOUNT

After concrete has set, carefully secure operator to the posts with drive and idler sprockets facing the gate. Use the 3" U-bolts and hardware provided. Model **SL590:** allow a minimum of 12" between ground level and the bottom of operator.

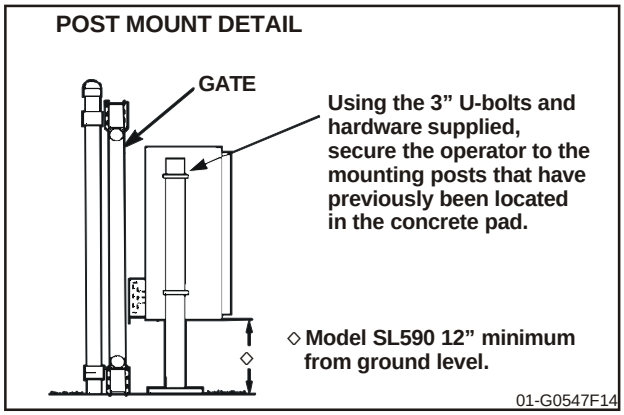

Figure 14

Step 3: Gate Brackets

For steps 3 & 4, refer to Figures 15-17.

Secure gate bracket to the vertical front and rear posts of the gate.

NOTE: If a back frame was added, then secure rear gate bracket to the back frame.

Important: The large slotted holes in gate brackets must be level and in line with the bottom of the idler sprockets and each other. Slide the gate to the full open and full closed positions to check alignment.

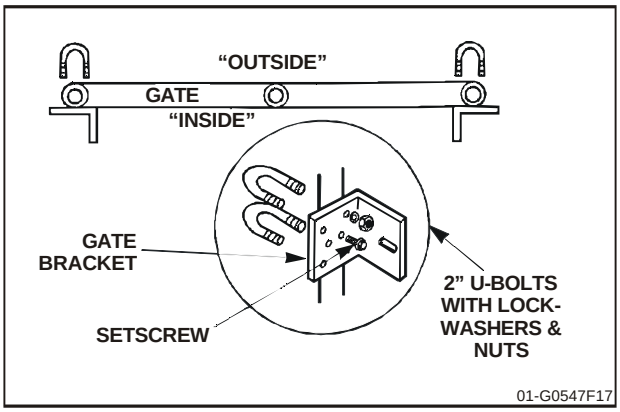

Figure 15

Step 4: Drive Chain

1 If you have not already done so, remove the operator cover.

2 Locate and engage the manual disconnect lever and lock it in place. Refer to 14.

3 Connect one chain take-up bolt to the end of the chain and attach to the rear gate bracket. Refer to bracket detail below.

4 Ensure that the drive and idler sprockets are in-line with each other. Thread the chain through plastic chain guide, around drive and idler sprockets, and then through the second plastic chain guide toward front gate bracket.

CAUTION

When pulling the chain through the operator, the limit shaft will turn. Do not drive the limit (nuts) actuators on this shaft past their normal positions.

5 Adjust the chain to proper length and attach second take-up bolt to chain end. Secure the take-up bolt to the front gate bracket as shown.

Important: Check alignment of gate brackets to idler sprockets in both vertical and horizontal directions.

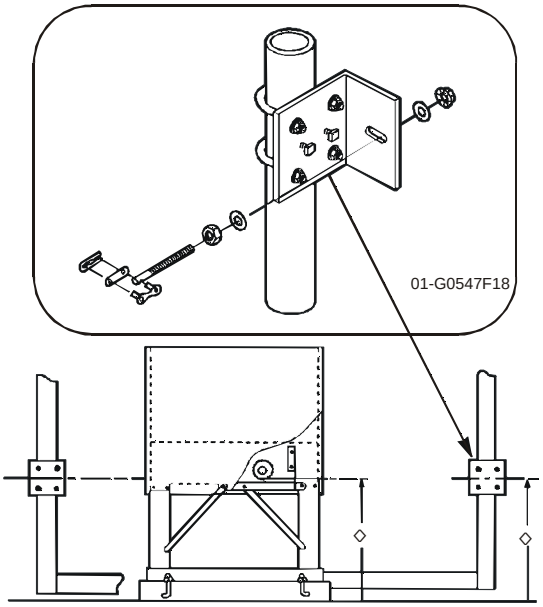

◇ **Gate brackets must be level and in line with bottom of idler sprockets.**

Figure 16

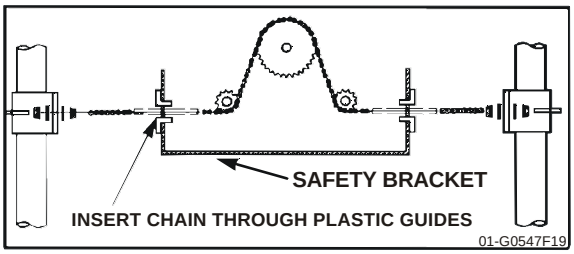

Figure 17

6 Adjust nuts on chain take-up bolts to remove chain slack. Leave a maximum of one (1) inch of chain slack for every 10 feet of chain length. **Do not overtighten chain.**

7 It is recommended that the gate brackets be welded to the gate after the chain is properly installed, adjusted, and the operator is functioning.

SUGGESTION

To prevent excessive chain sag, LiftMaster recommends that you add some type of chain support for gates over 20 feet in length. Please note that chain supports must be located a minimum of ¾" below the idler sprocket shield and must note exceed ¾" beyond the centerline of the chain.

NOTE ABOUT SOME TYPES OF CANTILEVER GATES

With some cantilever gates over 20 feet long, you may need to add a brace along the length of the gate to prevent the gate from bowing with chain is tightened. This may also be required on some styles of gates that are constructed out of aluminum. Note that if positioned properly, this brace can also be used as a chain support.

BEFORE PROCEEDING PLEASE READ THIS

Electrical Disconnect Switch

Throughout the course of installation you will be required to disconnect electrical power. This can be done by locating the electrical power disconnect switch and turning it on or off as desired.

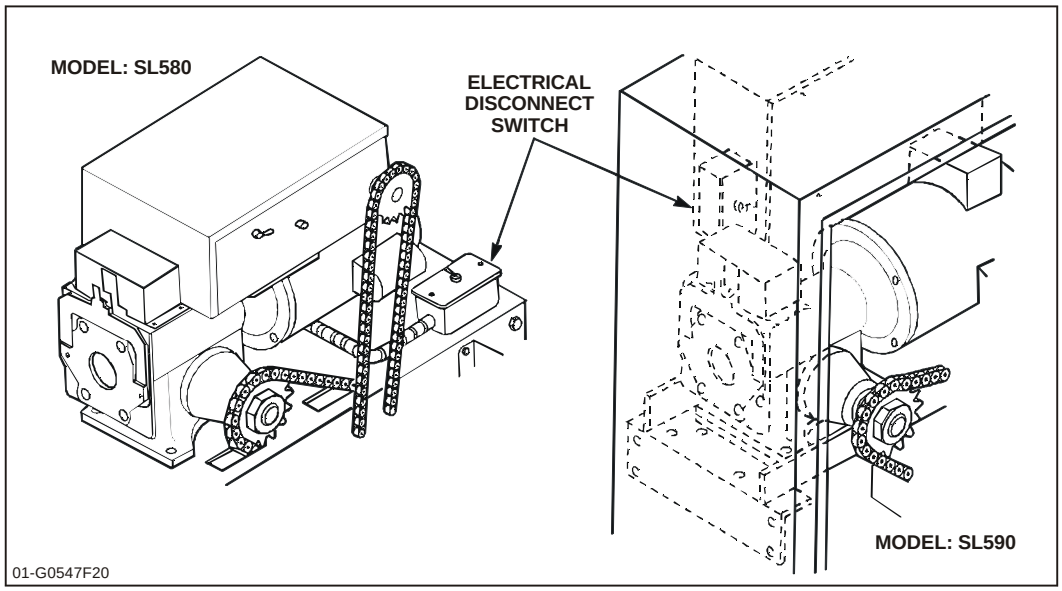

Figure 18

Step 5: Electrical Power Connections

CAUTION

Make sure power is disconnected at the main power source and at the operator's electrical disconnect switch before proceeding.

Secure all electrical power connections inside the power wiring compartment located on the outside end of control panel. Use the electrical wiring diagram supplied with this unit.

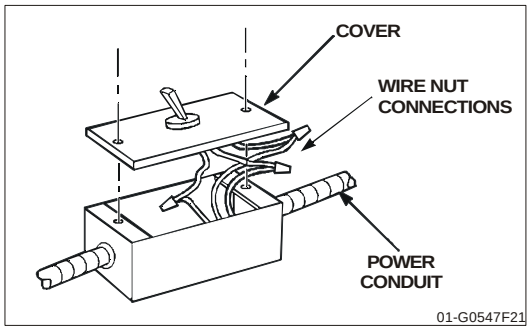

Figure 19

- All single phase operators will have – L1 (neutral), L2 (hot) and ground.
- All three phase operators will have – L1, L2, L3 and ground.

It is very important that operator is properly grounded.

NOTE: Permanent wiring is to be employed as required by local codes.

Important: On the phase operators the power connections must be properly phased. If they are phased wrong, the gate operator will run backwards. To correct this situation, disconnect power at main power source and at the operator's electrical disconnect switch. Then, reverse any two of the three power leads.

Step 6: Limit Switch Adjustments

1. By using the mechanical disconnect, manually open the gate to its full open position (Note direction of limit nut travel).
2. Remove control panel cover and locate the rotary limit switch assembly. Disengage the retaining bracket from the limit nuts.
3. Depending on the “hand” of the operator, rotate the open limit nut until it makes contact with the open limit switch lever and trips the open limit switch activation button.
4. Adjust the other limit nut so that it is near the open limit nut but not touching.
5. Manually close the gate to its full closed position.
6. Disengage the retaining bracket and rotate the close limit nut until it makes contact with the close limit switch lever and trips the close switch.
7. Re-engage the retaining bracket into both limit nuts and also re-engage the mechanical disconnect.

DIRECTION OF GATE TO OPEN	OPEN LIMIT	CLOSE LIMIT
RIGHT	A	B
LEFT	B	A

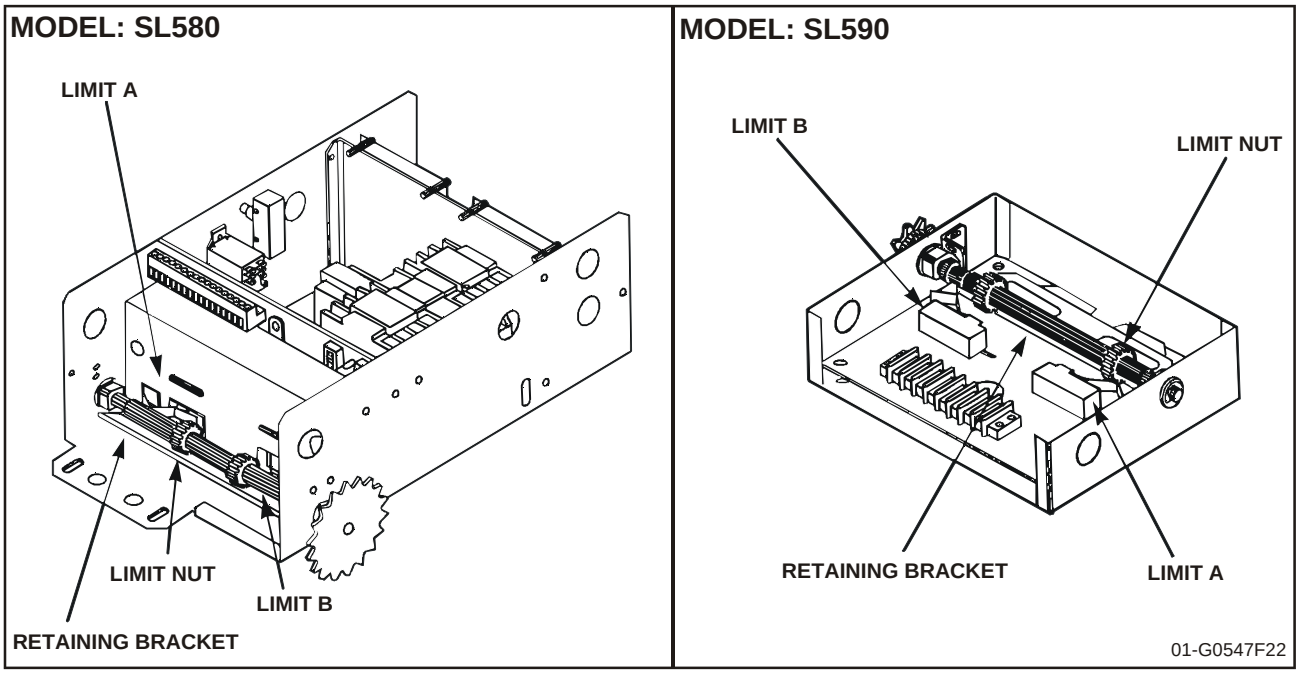

Figure 20

Programming

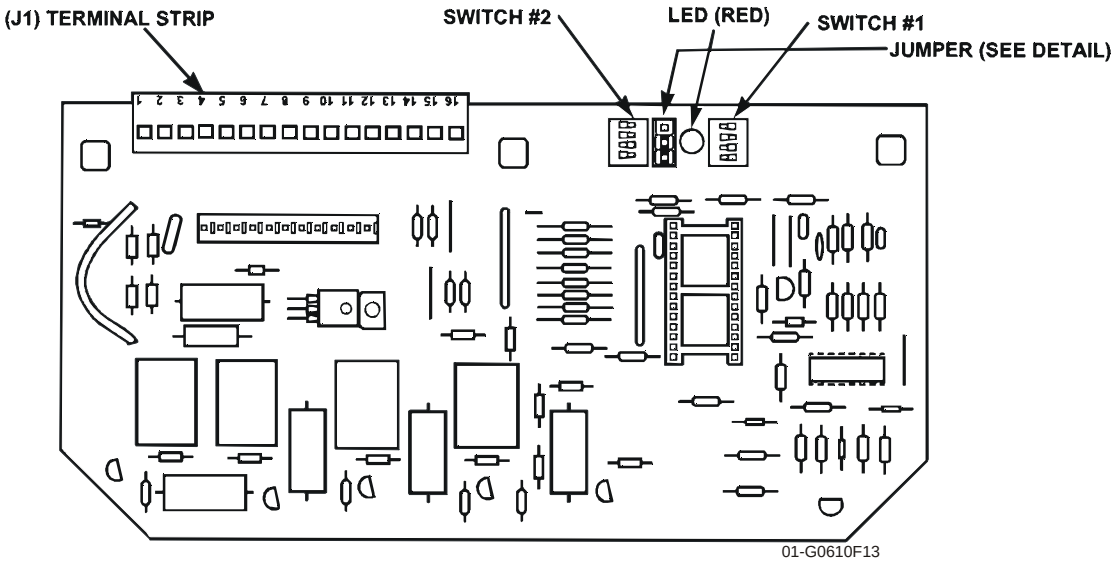

Figure 21

Switch #1: Operator Programming

POLE #1: SINGLE/CLOSE BUTTON
ON = Close button only
OFF = Open/Close button

POLE #2: RIGHT HAND / LEFT HAND
ON = Left Hand (gate will open to the left)
OFF = Right Hand (gate will open to the right—inside of fence looking out)

POLE #3: WARNING DEVICE
ON = Warning device will turn on 3 seconds before gate starts to move in either direction.
OFF = Warning device disabled.

POLE #4: MASTER/SLAVE – SINGLE UNIT
ON = Master or Single Unit
OFF = Slave Unit

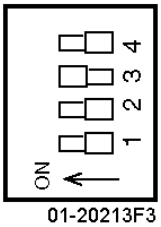

Figure 22

RED LED INFORMATION

- Continuous ON = Unit is on a limit.
- Blinking 1 flash per second = Normal operation (gate travel or midstop).
- Blinking 2 flashes per second = Entrapment level 1 (operator reverse to limit).

POLE #1	POLE #2	POLE #3	POLE #4	TOTAL TIME WARNING DEVICE DISABLED	TOTAL TIME WARNING DEVICE ENABLED
ON	ON	ON	ON	DISABLED	DISABLED
OFF	ON	ON	ON	1 SEC.	4 SEC.
ON	OFF	ON	ON	13 SEC.	16 SEC.
OFF	OFF	ON	ON	26 SEC.	2 SEC.
ON	ON	OFF	ON	40 SEC.	43 SEC.
OFF	ON	OFF	ON	52 SEC.	55 SEC.
ON	OFF	OFF	ON	65 SEC.	68 SEC.
OFF	OFF	OFF	ON	78 SEC.	81 SEC.
ON	ON	ON	OFF	104 SEC.	107 SEC.
OFF	ON	ON	OFF	117 SEC.	120 SEC.
ON	OFF	ON	OFF	129 SEC.	132 SEC.
OFF	OFF	ON	OFF	141 SEC.	144 SEC.
ON	ON	OFF	OFF	155 SEC.	158 SEC.
OFF	ON	OFF	OFF	167 SEC.	170 SEC.
ON	OFF	OFF	OFF	180 SEC.	183 SEC.
OFF	OFF	OFF	OFF	194 SEC.	197 SEC.

Table 7

Switch #2: Timer to Close

Timer to close is locked out at the factory. To activate the timer to close, follow steps below:

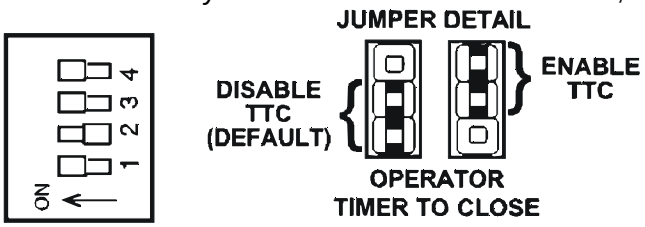

01-G0610F14

Figure 23

1. Move safety jumper from bottom two pins to top two pins. Then set time per the chart.
2. During normal operation, if the operator stops on a limit (except the close limit), or mid travel, the operator will time out per the chart and automatically close.
3. To lock the timer to close program and disable, simply return the jumper to the bottom two pins, or turn on all pins of SW#2.

IMPORTANT NOTE: When using master/slave, only set the time for the master operator. The slave operator must be set to disabled position (all poles on).

Adjustments and Check Out

Clutch Adjustment

An adjustable friction type clutch is standard on the models SL580 and SL590. It is **important** that you properly adjust the clutch to obtain proper operator performance.

1. Loosen the 3 set screws on the clutch nut.
2. Back off the clutch nut until there is very little tension on the clutch spring.
3. Tighten the clutch nut gradually until there is just enough tension to permit the operator to move the gate, but will allow the clutch to slip if the gate is obstructed.

   When the clutch is properly adjusted, it should generally be possible to stop the gate by hand during travel.
4. Re-tighten a set screw on the clutch nut that is directly over a flat portion of the shaft.

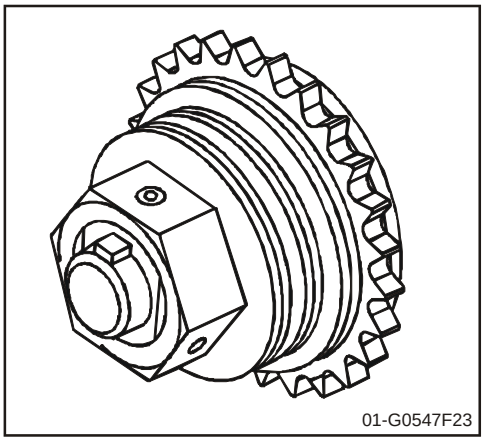

Figure 24

CAUTION

The friction clutch is not an automatic reversing device. It minimizes damage to the gate operator and gate. It can also limit major vehicle damage, if adjusted properly. This operator incorporates an internal obstruction sensor system, but it is highly recommended that external obstruction sensing devices such as gate edges or photo beams systems be incorporated into the gate system to aid in the protection of any possible pedestrian traffic. Periodic inspection of the clutch system and all internal and external sensor systems is required to ensure their proper operation.

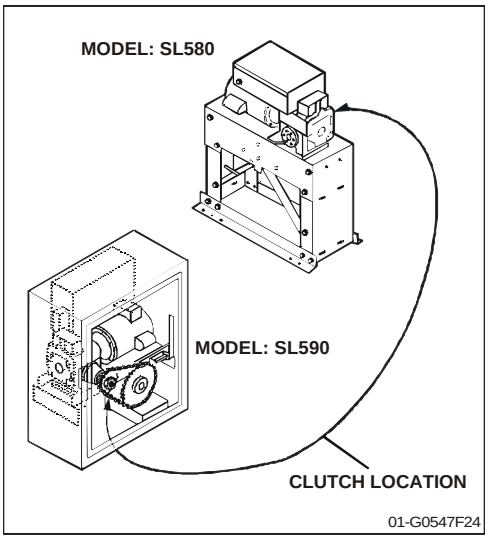

Figure 25

Preliminary System Check Out

Before adding any options, accessories or adaptations, it is highly recommended that you check out the system and its programs. If you have not already done so, temporarily connect a three button station to the operator. Test for proper open, stop and closing of the gate. Test the internal obstruction sensor system. Test for proper operation of all programs that were programmed into the system. Once everything checks out okay, then proceed to adding on the accessory items for this job site.

NOTE: LiftMaster recommends that if more than one accessory item is used, after each one is attached, check it for proper operation before adding the next.

Important: Make sure that the two (2) gate warning signs are secured to the gate. One on the inside and one on the outside. They **must** be easily seen.

Controls and Accessory Installation

See wiring diagram for more information. See p. 11 for wiring distances and wire gauge information.

All inputs are normally open and momentary, except the stop (NC), and emergency close and emergency open (constant pressure). The following instructions are based upon UL 325, dated March of 1999 and include recommendations for significant increase in safety.

We strongly recommend that you follow the UL guidelines presented throughout the manual. Installation device instructions – always follow the instructions provided by the manufacturer when installing and adjusting any control device. If these instructions are contrary to the advice given here, call for assistance.

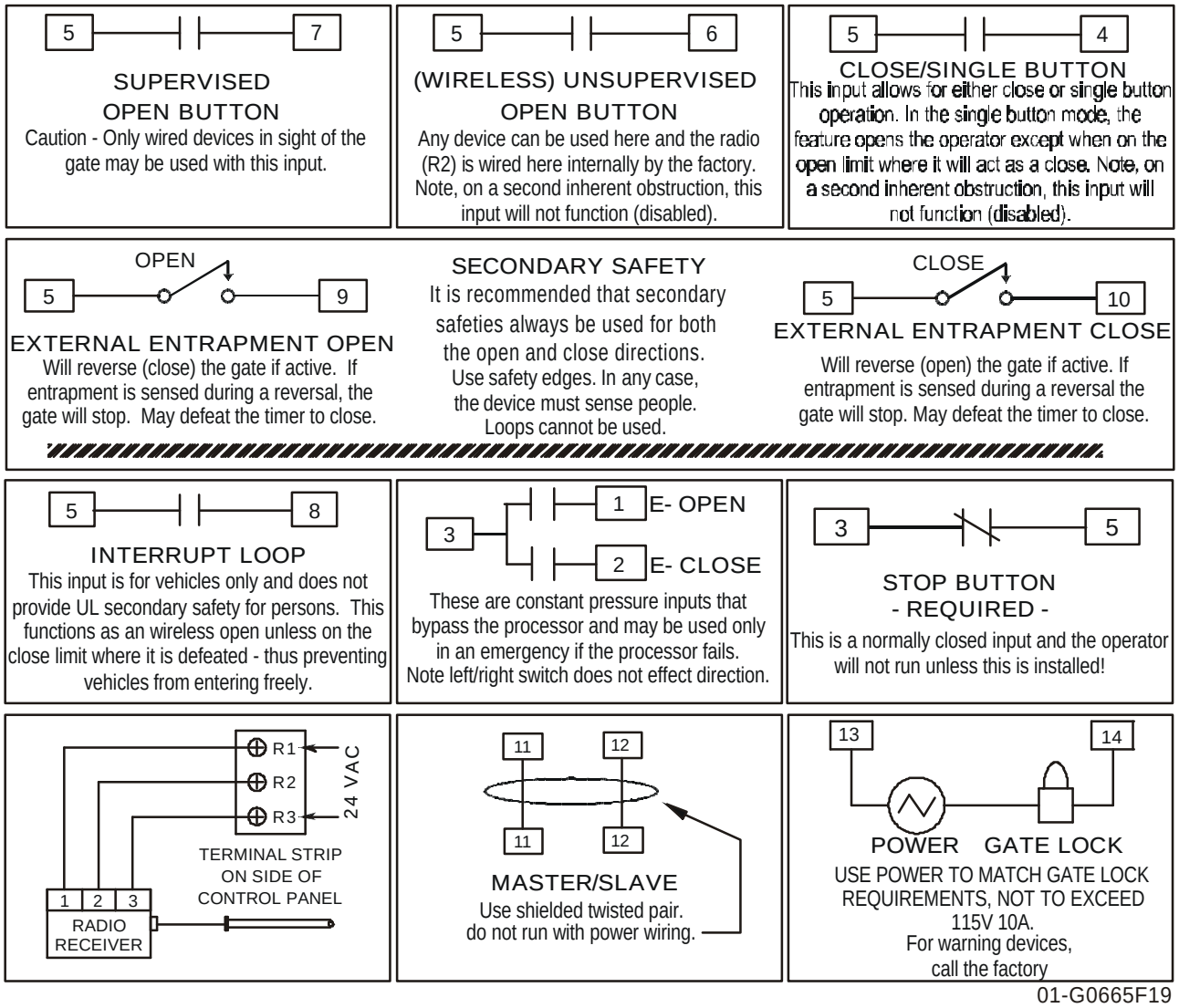

Figure 26

NOTE: Numbers shown inside a box are on the J1 terminal strip on the circuit board. Connections shown here are field connections. The radio receiver may be ordered factory installed.

Troubleshooting

When troubleshooting, one of the first things to do is try to isolate the problem area. The four (4) main areas to check out are:

- Power
- Accessories
- Operator's Primary Voltage
- Operator's Low Voltage

1. Power

Always use extreme caution! Some possible symptoms of power problems include:

- The obvious one is – the operator will not run.
- The operator runs slow.
- Circuit breakers or fuses keep tripping.
- Motor overload keeps tripping.
- Operator starts but then stops

1A.
Using a V.O.M. take a voltage reading at the control transformer's primary terminals. You should get a reading as follows:

Nominal Volt.	Min.	Max.
120v.	108	132
230v.	207	253
460v.	414	506

Table 8

If you get a reading that does not fall into the minimum/maximum area, then check out your main power supply. Also, make sure that the operator was ordered with the proper voltage and phase. Another item to check is the wire run from the power supply to the operator. Double check the gauge of the wire versus the distance.

1B.
If the voltage reading is O.K. from 1A, then take the same voltage reading with the operator running. If voltage drops below the minimum with this reading, then there could be an excessive current draw somewhere.

1C.
In some cases, power drops can occur at only specific times during the day or night. This can be caused by increased power demands in a general area at a specific time.

2. Accessories

Add-on accessories can create many of the problems that are credited to the operator. Many applications have more than one accessory item attached to the operator and some of these items even draw their power from the operator.

Some of the symptoms that can show up because of accessories:

- The operator won't close.
- The operator won't open.
- The operator will not run.
- The operator begins to run then stops or reverses.

2A.
Whenever the problem is thought to be an accessory and there are more than one connected to the operator, always disconnect one accessory at a time and then test the system. This will hopefully isolate which item is causing the problem.

2B.
If an accessory item is being used as an access control device (used to open or close), falls in the closed position or sends out a continuous signal. The operator will hold the gate in one position until the signal from the accessory is removed.

2C.
In some applications, the gate may begin to move then either stop or stop and reverse within a couple of seconds. This can be caused by an external obstruction device that has failed.

2D.
If there are many accessories attached to and powered by the operator, there may be too much current draw for the operator's control transformer. This operator can only supply approximately 2 amps @ 24 vac. Double check all accessories for their current requirements.

3. Primary Voltage Circuit

Use extreme caution when troubleshooting the primary voltage circuit! There are three (5) items in this circuit that could be causing trouble, and they are:

- Motor
- Transformer
- Brake solenoid
- Contactor
- Power disconnect switch

3A.
The first thing to check is the incoming power. Is it there at the incoming side of the power disconnect switch?

3B.
If there is power, then check for it at the transformer primary terminals. If there is voltage at the switch and none at the transformer, then you probably have a bad power disconnect and it should be replaced.

3C.
If 3A and 3B check out O.K., then manually disconnect the operator from the gate. **Very carefully**, using a screwdriver with an insulated handle, press down on the open side of the contactor. Then, do the same to the close side of the contactor. Then, do the same to the close side of the contactor. Did the operator run in both directions? If it did, the problem may be in the low voltage control circuit, if it did not, then the problem is either in the contactor or the motor.

NOTE: Some motors have the overload built into the motor itself, while other units have a separate overload in the controller.

3D.
If the contactor is suspected to be causing the problem, first carefully check all wiring connections at the contacts. DISCONNECT POWER! USING A V.O.M. take continuity readings across the contacts of the contactor. Place one probe on 1 and the other on 2. You should get NO continuity, now press down on the contactor, you should get a continuity reading. Repeat this on all the of the contactor's contact points.

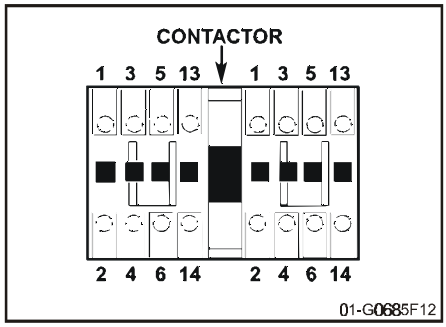

Figure 27

4. Low Voltage Circuit

4A.
The first thing to check is the **circuit breaker**.

4B.
The secondary voltage must be between 22 and 30 vac. This voltage can be checked at the circuit board at terminals J1-3 & J1-11.

4C.
The contactor coils receive 24 vac. to activate the motor in either the open or close direction. There are two contactor coils (one for open and one for close).

4D.
The limit switches are S.P.D.T. (single pole, double throw). These limit switches are what tells the operator to shut off at either the full open or full close position.

4E.
The R.P.M. Sensor is counting the r.p.m 's of the wheel that is attached to the shaft. There are no repairable parts for the sensor of wheel. The only thing that should be checked is the wire harness. Make sure that the wires are crimpled and fully seated into the housing. Also make sure that the housing is fully seated into the circuit board.

4F.
The circuit board is the "brains" of the entire system. It is a non-repairable item. In many cases, un-awareness of the different programs and their functions can make it look like there is a problem when in actuality it is just a missed or wrong program setting. Make sure that all the connections wires on the "J1" terminal board are installed correctly. There MUST also be a stop button connected to J1-3 and J1-5.

Gear Reducer

- If physical signs show a seal has broken in the gear reducer, it may be necessary to replace the reducer.
- When replacing the gear reducer oil, use Mobil SHC 630 or equivalent. The oil level for the gear reducer allows gear to be dipped but not submerged in oil.
- Do not overfill gear reducer oil reservoir. Reducer oil – Part #04-DUP220HT

General Reference Information

THE GATE
Double check the gate and its related hardware. Does the gate move freely? If it doesn't, this can affect the internal obstruction sensor.

WIRING DIAGRAM
Always reference the wiring diagram that was supplied with the operator. Note that some of the accessory items may have their own wiring diagram.

If you cannot correct the problem or if you feel you will require technical assistance, contact your local distributor or dealer. If you do not have a distributor or dealer, then contact us for technical assistance. Please when calling for assistance, make sure you have the gate operator model number, voltage, phase, horsepower and a list of all accessories that are attached to the operator.

Features and Program Troubleshooting Review

The **internal obstruction sensor (r.p.m. sensor)** will cause the operator to either stop or reverse if it senses a slow down in gate speed. A damaged or poorly working gate can trip the sensor and cause "phantom" reversing or stopping. Also if the operator's clutch is slipping too much, this can cause the same situation.

Required Maintenance – Normal Usage

		Check at least once every			
		1 month	3 months	6 months	12 months
Internal speed sensor	Check for proper operation	✓			Complete Check Out
External safety systems	Check for proper operation	✓			
Gate caution signs	Make sure they are present	✓			
Clutch system✓	Check & adjust if required		✓		
Brake system	Check & adjust if required			✓	
Manual disconnect	Check & operate			✓	
Drive chain (D) (E)	Check for excessive slack & lubricate			✓	
Sprockets & pulleys	Check for excessive slack & lubricate			✓	
Gate	Inspect for wear or damage			✓	
Accessories	Check all for proper operation			✓	
Electrical	Inspect all wire connections			✓	
Frame bolts	Check for tightness			✓	
Total unit	Inspect for wear or damage				

Table 9

✓ Important: A clutch that is set too loose will give false, inherent entrapment and reverse or stop the gate.

NOTES:

A. **Caution:** When servicing, always disconnect operator from electrical power supply.

B. Severe or high cycle usage will require more frequent maintenance checks.

C. Inspection and service should always be performed anytime a malfunction is observed or suspected.

D. Limit switches may have to be reset after any major drive chain adjustments.

E. If lubrication chain, use only a proper chain lub spray or a lightweight motor oil. Never use grease or silicone spray.

F. When servicing, please do some “home cleaning” of the operator an the area around the operator. Pick up any debris in the area. Clean the operator if needed.

G. It is suggested that while you are at the site, you take some voltage readings of the operator. Using a VOM, double check the incoming voltage to the operator to make sure it is within ten percent of the operator’s rating.

H. While you are at the site, now would be a good time to let the owner or manager know about any new items available or any safety items that could and should be added to the site.

SL580/590 Parts List & Drawings

SL580 Exploded View

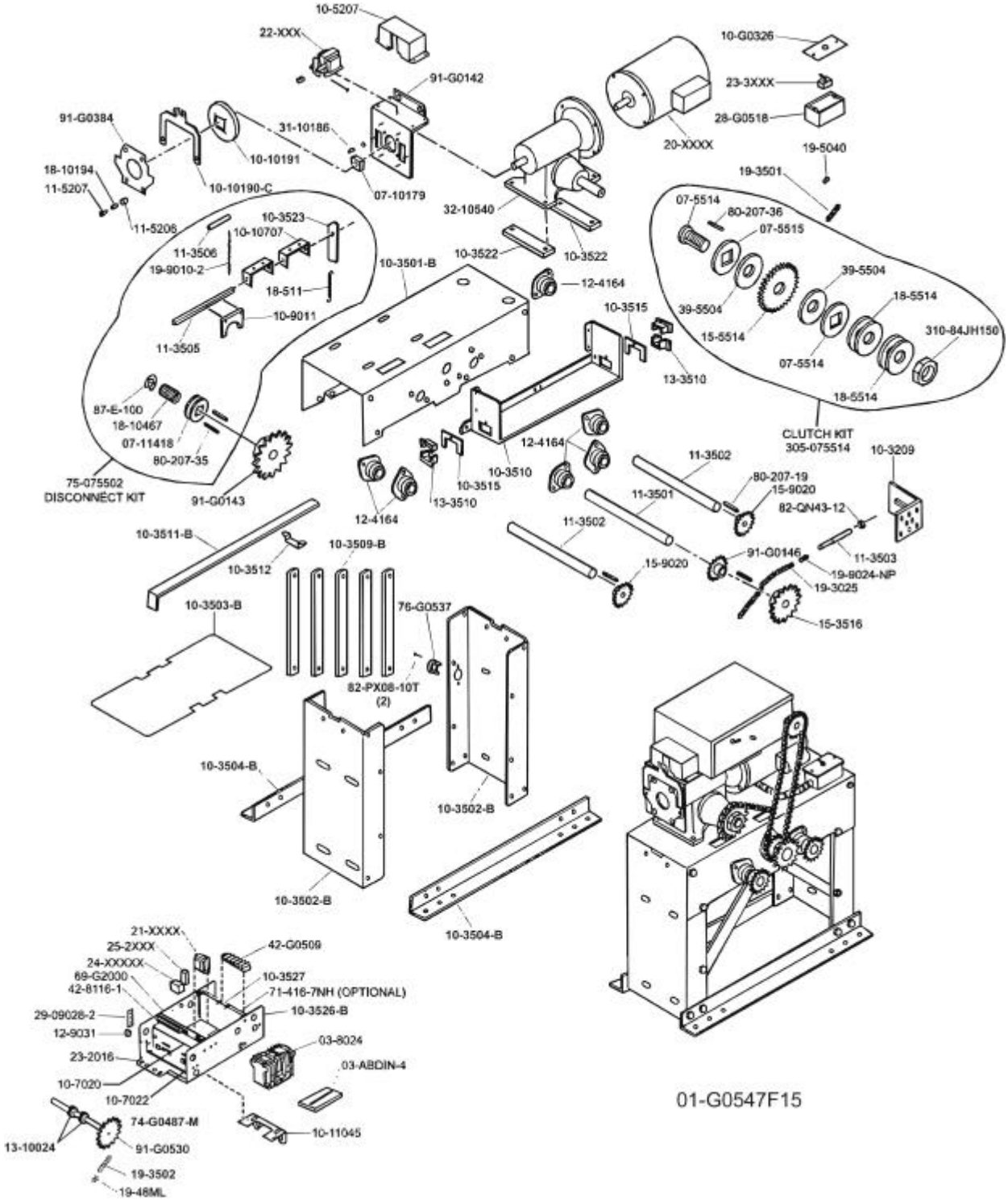

Figure 28

SL580 Parts List

Part No.	Qty.	Description	Part No.	Qty.	Description	Part No.	Qty.	Description
02-401-SP (N)	1	STOP BUTTON	15-9020	2	50B12 SPROCKET	82-HN38-16 (N)	2	3/8-16 x 1 HEX BOLT
03-8024	1	24V REVER. CONTACT.	18-10036 (N)	2	DEPRESS PLATE SPRING	82-HN38-18 (N)	4	3/8-16 X 1-1/4 HEX BOLT
03-ABDIN-4	1	DIN RAIL	18-10194	4	.875L COMPRESS. SPRING	82-HW25-06T (N)	2	1/4-20 x 3/8 HEX BOLT
07-10179	1	BRAKE HUB	18-10467	1	COMPRESSION SPRING	82-HX10-08T (N)	18	10-32 x 1/2 HEX SCREW
07-11418	1	DISCONNECT	18-511	1	DISCONNECT SPRING	82-NH25-06CP (N)	6	1/4-20 x 3/8 CONE POINT SET SCREW
07-5514	1	PRESSURE PLATE	18-5514	4	3" BELL WASHER	82-NH31-06CP (N)	7	5/16-18 x 3/8 SET SCREW
07-5515	2	PRESSURE PLATE GT&GSL REV A	19-3025	1	#50 CHAIN	82-PX04-04 (N)	2	4-40 X 1/4 PAN HEAD PHILLIPS SCREW
10-10181 (N)	1	BRAKE MOUNTING PLATE	19-3501	1	#40 CHAIN	82-PX06-06	5	6-32 x 3/8 SELF TAPPING SCREW
10-10190-C	1	BRAKE RELEASE LEVER	19-3502	1	LIMIT CHAIN	82-PX06-06T (N)	2	6-32 x 3/8 SELF TAPPING SCREW
10-10191	1	DISC BRAKE	19-48001 (N)	1	#48 CHAIN	82-PX06-16 (N)	2	6-32 x 1 PAN HEAD PHILLIP SCREW
10-10707	2	DISCONN. SUP. BRACKET	19-48ML	1	#48 CHAIN MASTER LINK	82-PX06-19 (N)	4	6-32 x 1-3/8 PAN HEAD PHILLIP SCREW
10-11045	1	EBOX MTNG. BRACKET	19-5040	1	#40 CHAIN MASTER LINK	82-PX08-04T (N)	10	8-32 x 1/4 SELF TAPPING PHILLIP SCREW
10-3209	2	GATE BRACKET	19-9010-2	1	8A SASH CHAIN	82-PX08-06G (N)	1	8-32 x 3/8 PAN HEAD GREEN SCREW
10-3501-B	1	GSL CHASSIS	19-9024-NP	1	#50 CHAIN MASTER LINK	82-PX08-08 (N)	2	8-32 x 1/2 PAN HEAD PHILLIP SCREW
10-3502-B	2	LEG CHANNEL	23-2016	2	LIMIT SWITCH N.C. SPST	82-PX08-08T (N)	2	8-32 x 1 SELF TAPPING PHILLIP SCREW
10-3503-B	1	GSL BOTTOM COVER	28-G0518	1	CONDUIT BOX	82-PX08-10T	5	8-32 x 5/8 SELF TAPPING PHILLIP SCREW
10-3504-B	2	MOUNTING ANGLE	29-09028-2	1	TERM. BOARD FOR RADIO	82-QN43-12	4	7/16-14 x 3/4 SQUARE HEAD SET SCREW
10-3505-T (N)	1	COVER	29-18200	1	HALL EFFECT SENSOR	82-SH10-14 (N)	2	10-32 x 7/8 SCREW
10-3509-B	1	STIFFENER	79-18142	1	HALL EFFECT PCB	83-HS08-04 (N)	4	#8 SHEETMETAL SCREW
10-3510	1	CHAIN GUARD	29-18163	1	16 POLE MAGNET	84-LH-06 (N)	2	6-32 LOCK NUT
10-3511-B	1	LOCKING BAR	29-G0537 (N)	1	HIGH OUTPUT ALARM	84-RH-50 (N)	4	1/2-13 HEX NUT
10-3512	1	BAR GUIDE	310-84JH150	1	1-1/2-12 HEX JAM NUT	84-WH-25 (N)	12	1/4-20 SERRATED FLANGED NUT
10-3515	2	RETAINER GUIDE	31-10186	2	.20 ID x .31 l SPACER	84-WH-31 (N)	28	5/16-18 SERRATED FLANGED LOCK NUT
10-3522	2	REDUCE SHIM	31-113 (N)	4	LIMIT SWITCH SPACER	84-WH-38 (N)	26	3/8-16 SERRATED FLANGE NUT
10-3523	1	DISCONNECT LEVER	31-10024	2	1/2-20 LIMIT NUTS	85-FW-06 (N)	2	#6 FLATWASHER
10-3526-B	1	CONTROL BOX	32-10540	1	GEAR REDUCER	85-FW-08 (N)	4	#8 FLAT WASHER
10-3527	1	BRACKET LOOP	39-10182	4	BRAKE PAD	85-FW-25 (N)	4	1/4 FLATWASHER
10-3528-B (N)	1	ELEC. BOX COVER	39-5504	2	CLUTCH DISC	85-FW-31 (N)	2	5/16 FLATWASHER
10-10185	1	BRAKE PLATE	41-G0538 (N)	1	S3 ALARM SPACER	85-FW-38S (N)	17	13/16 OD x 13/32 ID FLATWASHER
10-5207	1	BRAKE SOL. COVER	42-8116-1	1	16 POS. TERM. BLOCK	85-FW-50 (N)	4	1/2 FLATWASHER
10-7020	1	S2 BRD. MNTG. BRACKET	42-G0509	1	TERM. BLOCK 7 POSITION	85-LS-06 (N)	2	#6 LOCKWASHER
10-7022	1	DEPRESS PLATE	69-G2000	1	S3 PCB ASSEMBLY	85-LS-10 (N)	2	#10 LOCKWASHER
10-9011	1	BEVEL RELEASE YOKE	71-416-7NH	1	24V LOOP BOARD (OPTL.)	85-LS-31 (N)	1	5/16-18 SPLI. LCKWSHER
10-G0326	1	SWITCH BOX COVER	74-G0487-M	1	HALL EFFECT SENSOR	85-LS-38 (N)	4	3/8 SPLIT LOCKWASHER
10-G0483 (N)	1	SENSOR MNTG. BRACKET	75-075502	1	DISCONNECT KIT	85-LS-50 (N)	4	1/2 SPLIT LOCKWASHER
11-3501	1	DRIVE SHAFT	75-075514 (N)	1	CLUTCH	86-CP04-112 (N)	3	1/8 x 1-3/4 COTTER PIN
11-3502	2	IDLER SHAFT	76-G0537	1	ALARM ASSEMBLY	86-DP10-16 (N)	2	5/16 x 1 DOWL PIN
11-3503	2	TAKE-UP BOLT	80-207-19	3	1/4 x 1-1/2 KEY	86-RP04-100 (N)	1	1/8 DIA x 1" L ROLL PIN
11-3505	1	SHAFT DISC	80-207-35	2	1/4 x 1/4 x 1 KEY	87-E-038 (N)	1	3/8 E-RING
11-3506	1	DISCONNECT HANDLE	80-207-36	1	1/4 x 1/4 x 1-1/4L DIS. KEY	87-E-100	1	E-RING
11-5206	4	SPRING CUP	80-3001 (N)	4	5/16-18 U-BOLT	87-P-062 (N)	1	SELF-LOCKING EXT. RETAINING RING
11-5207	4	BRAKE STUD	80-3002 (N)	4	3/8-16 U-BOLT	91-G0142	1	BRAKE PLATE ASSEMBLY
11-G0484 (N)	1	LIMIT SHAFT	80-5001 (N)	1	3/16 x 3/16 x 1-3/4L KEY	91-G0143	1	DISCONNECT SPROCKET ASSEMBLY
12-3534 (N)	1	SLEEVE BEARING	81-21CGS00600 (N)	1	6" PLASTIC CARD GUIDE	91-G0146	1	LIMIT SPROCKET
12-4164	6	SELF-ALIGN. FLANGE MNT.	82-CB31-16 (N)	6	5/16-18 x 1 CARR. BOLT	91-G0384	1	BRAKE PRESSURE PLATE ASSEMBLY
12-5516 (N)	1	BEARING	82-CB31-26 (N)	4	5/16-18 x 2-1/2 CARR. BOLT	91-G0530	1	LIMIT SHAFT ASSEMBLY
12-9031	2	LIMIT SHAFT BEARING	82-CB38-24 (N)	4	3/8-16 X 2 CARRIAGE BOLT	15-5514	1	TORQUE LIMITER SPROCKET ASSEMBLY
13-3510	4	CHAIN GUIDE	82-FX25-20 (N)	4	1/4-20 X 1-1/2 FH SCREW	MG6400103 (N)	1	#8 EX. TOOTH WASHER
15-3516	1	50B16 SPROCKET	82-HN25-08 (N)	4	1/4-20 x 1/2 HEX H. BOLT	MG6400104 (N)	1	#10 EX. TOOTH WASHER
15-3534 (N)	1	40B34 SPROCKET	82-HN25-12 (N)	4	1/4-20 x 3/4 HEX H. SCREW			
15-48B18LGE (N)	1	48B18 SPROCKET	82-HN31-16 (N)	8	5/16-18 x 1 HEX HEAD CAP SCREW			
15-9014 (N)	1	48B18 SPROCKET	82-HN38-12 (N)	14	3/8-16 x 3/4 HEX BOLT			

Parts designated (N) are not shown on drawing.
Parts having one or more X in the part No. vary from model to model. See “Variable parts” below.
Parts designated (3PH) are present on 3 ph operators only.
Quantities shown in parenthesis are used only on 1 and 1 ½ HP operators.

SL580 Variable Parts			
Variable	**P/N**	**Description**	**Used On**
20-XXXX	20-1050-T	MOTOR: 1/2 HP - 115/230VAC - 1Ø - 60hz	SL580-50-11-S3, SL580-50-21-S3, SL580-50-81-S3
	20-1075-T	MOTOR: 3/4 HP - 115/230VAC - 1Ø - 60hz	SL580-75-11-S3, SL580-75-21-S3, SL580-75-81-S3
	20-1100-T	MOTOR: 1 HP - 115/230VAC - 1Ø - 60hz	SL580-100-11-S3, SL580-100-21-S3, SL580-100-81-S3
	20-3050-T	MOTOR: 1/2 HP - 208/230/460VAC - 3Ø - 60hz	SL580-50-23-S3, SL580-50-43-S3, SL580-50-83-S3
	20-3075C-4T	MOTOR: 3PH 3/4HP CFC 230/460VTEFC	SL580-75-23-S3, SL580-75-43-S3, SL58-75-83-S3
	20-3100M-5T	MOTOR: 1 HP - 575VAC - 3Ø - 60hz	SL580-100-53-S3
	20-3100-T	MOTOR: 1 HP - 208/230/460VAC - 3Ø - 60hz	SL580-100-23-S3, SL580-100-43-S3, SL580-100-83-S3
	20-3200-5T	MOTOR: 2 HP - 575VAC - 3Ø - 60hz	SL580-150-53-S3
	20-3200C-4T	MOTOR: 2 HP - 208/230/460VAC - 3Ø - 60hz	SL580-150-23-S3, SL580-150-43-S3, SL580-83-S3
21-XXXX	21-3260	24V TRANSFORMER, 50VA	ALL 115/230/208VAC - 1Ø and 208/230/460VAC - 3Ø MODELS
	21-10298	24V TRANSFORMER, 100VA	ALL 575VAC - 3Ø MODELS
22-XXX	22-120	120VAC BRAKE SOLENOID	ALL 115VAC - 1Ø MODELS
	22-240	230VAC BRAKE SOLENOID	ALL 208/230/460VAC - 1Ø and 3Ø MODELS
	22-575-1	575VAC BRAKE SOLENOID	ALL 575VAC - 3Ø MODELS
23-XXXX	23-3001	POWER LINE SWITCH	ALL 1Ø MODELS
	23-3005	POWER LINE SWITCH	ALL 3Ø MODELS
24-XXXX	24-115-1	115VAC RELAY	ALL 115VAC - 1Ø MODELS
	24-230-5	208/230VAC RELAY	ALL 208/230VAC - 1Ø MODELS
25-XXXX	25-2006	6A FUSE	SL580-50-21-S3, SL580-50-81-S3, SL580-75-81-S3
	25-2008	8A FUSE	SL580-75-21-S3
	25-2010	10A FUSE	SL580-50-11-S3, SL580-100-21-S3, SL580-100-81-S3
	25-2015	15A FUSE	SL580-75-11-S3, SL580-150-21-S3, SL580-150-81-S3
	25-2020	20A FUSE	SL580-100-11-S3
	25-2025	25A FUSE	SL580-150-11-S3
	25-4002-5	1.6 - 2.5A FUSE	SL580-75-53-S3, SL580-100-43-S3, SL580-100-53-S3
	25-4004	2.5 - 4.0A FUSE	SL580-150-43-S3, SL580-150-53-S3
	25-4006	4.0 - 6.0A FUSE	SL580-100-23-S3, SL580-100-83-S3
	25-4008	5.5 - 8.0A FUSE	SL580-150-23-S3, SL580-150-83-S3

SL590 Exploded View

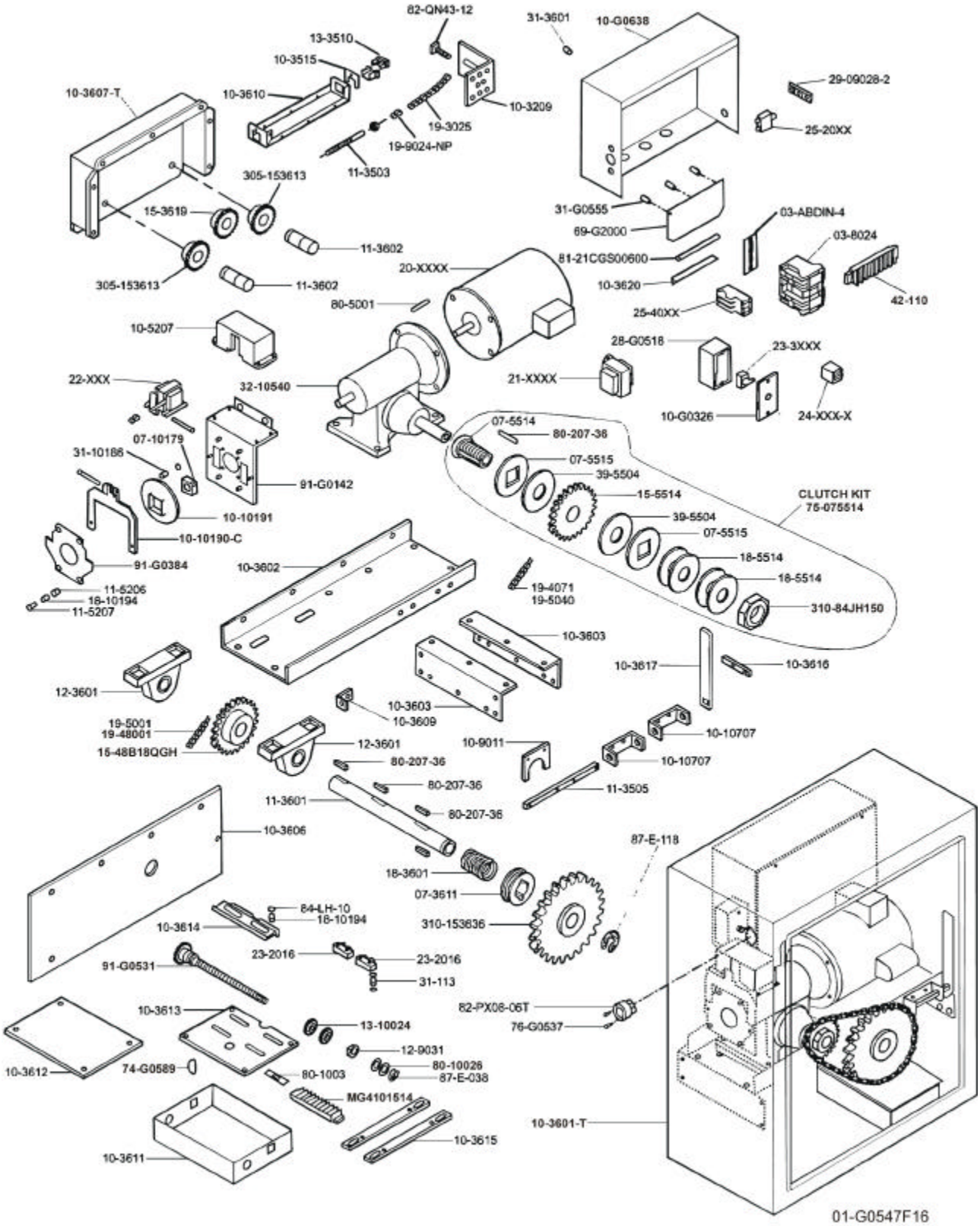

Figure 29

SL590 Parts List

Part No.	Qty.	Description	Part No.	Qty.	Description	Part No.	Qty.	Description
02-401-SP (N)	1	STOP BUTTON	15-3619	1	50B19 SPROCKET	82-HN25-08 (N)	8	1/4-20 x 1/2 HEX HEAD BOLT
03-8024	1	24V REVERSING CONTACTOR	15-3636 (N)	1	40B36 SPROCKET	82-HN25-12 (N)	6	1/4-20 x 3 HEX HEAD BOLT
03-ABDIN-4	1	DIN RAIL	15-48B9A1 (N)	1	48B9 SPROCKET	82-HN25-18 (N)	4	1/4-20 X 1-1/4 HEX HEAD BOLT
07-10179	1	BRAKE HUB	15-5514	1	40A25 TORQUE LIMITER SPROCKET	82-HN38-12 (N)	4	3/8-16 x 3/4 HEX HEAD BOLT
07-3611	1	DISCONNECT BUSHING	15-48B18QGH	1	48B18 SPROCKET	82-HN38-16 (N)	27	3/8-16 x 1 HEX HEAD BOLT
07-5514	1	CLUTCH	18-10194	6	COMPRESSION SPRING	82-HN38-18 (N)	4	3/8-16 X 1-1/4 HEX HEAD BOLT
07-5515	2	PRESSURE PLATE	18-3601	1	DISCONNECT SPRING	82-HN50-16 (N)	1	1/2-13 x 1 HEX HEAD BOLT
10-10181 (N)	1	BRAKE MOUNTING PLATE	18-5514	4	3 OD x 1-1/2 ID x .093 BELL WASHER	82-HN50-22 (N)	4	1/2-20 x 1-3/4 HEX HEAD BOLT
10-10190-C	1	BRAKE RELEASE LEVER	19-3025	1	#50 CHAIN	82-HX10-08T (N)	9	10-32 x 1/2 HEX HEAD SCREW
10-10191	1	DISC BRAKE	19-4071	1	#40 CHAIN	82-NH25-06CP (N)	5	1/4-20 x 3/8 CONE POINT SET SCREW
10-10707	2	DISCONNECT SUPPORT BRACKET	19-48001	1	#48 MASTER LINK	82-NH31-06CP (N)	4	5/16-18 x 3/8 SET SCREW
10-3209	2	GATE BRACKET	19-5001	1	#48 LIMIT CHAIN	82-PX04-04 (N)	2	4-40 x 1/4 PAN HEAD PHILLIP SCREW
10-3515	2	GUIDE RETAINER	19-5040	1	#40 MASTER LINK	82-PX06-04T (N)	2	6-32 X 1/4 PAN HEAD PHILLIP SCREW
10-3601-T	1	TAN ENCLOSURE	19-9024-NP	1	#50 MASTER LINK	82-PX06-19 (N)	4	6-32 x 1-3/8 PAN HEAD PHILLIP SCREW
10-3602	1	MOUNTING SHELF	23-2016	2	NC SPST LIMIT SWITCH	82-PX08-04T (N)	12	8-32 x 1/4 SELF TAPPING PHILLIP SCREW
10-3603	2	SHELF BRACKET	28-G0518	1	CONDUIT BOX	82-PX08-06G (N)	1	8-32 x 3/8 PAN HEAD SCREW
10-3606	1	STIFFENER PLATE	29-09028-2	1	RADIO TERMINAL BOARD	82-PX08-06T	2	8-32 x 3/8 PAN HEAD SELF TAPPING SCREW
10-3607-T	1	TAN CHAIN GUIDE	29-18200	1	HALL EFFECT SENSOR	82-PX08-10T (N)	3	8-32 X 5/8 SELF TAPPING PHILLIP SCREW
10-3609	2	ANGLE PLATE	79-18142	1	HALL EFFECT PCB	82-PX10-18 (N)	2	10-32 X 1-1/4 PAN HEAD SCREW
10-3610	1	CHAIN GUARD	29-18163	1	16 POLE MAGNET	82-PX25-28 (N)	4	1/4-20 x 3 PAN HEAD PHILLIP SCREW
10-3611	1	LIMIT SWITCH BOX	29-G0537 (N)	1	HIGH OUTPUT ALARM	82-QN43-12	4	7/16-14 x 3/4 SQUARE HEAD SET SCREW
10-3612	1	BOX COVER	305-153613	2	IDLER SPROCKET ASSEMBLY	82-SH10-12 (N)	2	10-32 x 3/4 SOCKET HEAD SCREW
10-3613	1	L/S PANEL	310-153636	1	40B36 SPROCKET ASSEMBLY	84-LH-10	7	10-32 NYLON INSERT NUT
10-3614	1	LIMIT SWITCH ADJUSTMENT PLATE	310-84JH150	1	1-1/2 -12 JAM NUT	84-RH-50 (N)	8	1/2-13 HEX NUT
10-3615	2	MOUNTING BRACKET	31-10186	2	SPACER	84-WH-25 (N)	16	1/4-20 SERRATED FLANGE NUT
10-3616	1	DETENT PLATE	31-113	4	LIMIT SWITCH SPACER	84-WH-31 (N)	8	5/16 SERRATED FLANGE LOCK NUT
10-3617	1	DISCONNECT LEVER	13-10024	2	1/2-20 LIMIT NUT	84-WH-38 (N)	30	3/8-16 SERRATED FLANGE NUT
10-3620	1	S3 MOUNTING BRACKET	31-3601	4	1/4-20 COUPLING NUT	84-WN-25 (N)	4	1/4-20 WING NUT
10-3622 (N)	1	CONTROL BOX COVER	31-G0555	1	ALUM. HEX STANDOFF	85-FW-06 (N)	3	#6 FLATWASHER
10-5207	1	BRAKE SOLENOID COVER	32-10540	1	GEAR REDUCER	85-FW125 (N)	4	1-1/4 X 1-7/8 x 18 SPACER WASHER
10-9011	1	RELEASE YOKE BEVEL	39-10182 (N)	4	BRAKE PAD	85-FW-25 (N)	4	1/4 FLATWASHER
10-G0326	1	SWITCH BOX COVER	39-5504	2	CLUTCH DISC	85-FW-38 (N)	8	3/8 FLATWASHER
10-G0483 (N)	1	SENSOR MOUNTING BRACKET	41-G0538 (N)	1	S3 ALARM SPACER	85-FW-38S (N)	27	13/16 OD x 13/32 ID FLATWASHER
10-G0638	1	ELECTRIC. ENCLOSURE	42-110	1	10 POSITION TERMINAL BLOCK	85-FW-50 (N)	8	1/2 FLATWASHER
11-3503	2	TAKE-UP BOLT	42-110	1	16 POS. TERM. BLOCK	85-LS-25 (N)	4	1/4-20 LOCKWASHER
11-3505	1	DISCONNECT SHAFT	69-G2000	1	S3 BOARD	85-LS-38 (N)	8	3/8 SPLIT LOCKWASHER
11-3601	1	DRIVE SHAFT	74-G0589	1	HALL EFFECT SENSOR ASSY.	85-LS-50 (N)	10	1/2 SPLIT LOCKWASHER
11-3602	2	IDLER SHAFT	75-075514	1	CLUTCH KIT	86-CP04-112 (N)	4	COTTER PIN
11-5206	4	SPRING CUP	76-G0537	1	ALARM ASSEMBLY	86-DP12-20 (N)	3	3/8 x 1-1/2 DOWL PIN
11-5207	4	BREAK STUD	80-10026	1	3/8 SHIM WASHER	86-RP04-100 (N)	1	1/8 x 1 L ROLL PIN
11-G0484 (N)	1	LIMIT SHAFT	80-1003	2	6-32 TINNERMAN NUT	87-E-038	1	3/8 E-RING
12-3601	2	PILLOW BLOCK BEARING	80-207-36	1	1/4 x 1-1/2 KEY	87-E-118	5	1-3/16 E-RING
12-3605 (N)	1	1-1/4 X 1-1/2 X 1 BEARING	80-207-36	4	1/4 x 1/4 x 1/4 DISCONNECT KEY	87-P-062 (N)	1	SELF-LOCKING EXTERNAL RETAINING RING
12-3612 (N)	1	SLEEVE BEARING	80-3001 (N)	4	5/16-18 U-BOLT	91-G0142	1	BRAKE ASSEMBLY
12-5516 (N)	1	1-1/2 X 1-3/4 BEARING	80-3002 (N)	4	3/8-16 U-BOLT	91-G0149 (N)	2	IDLER BOLT
12-9031	2	LIMIT SHAFT BEARING	80-5001	2	3/16 x 3/16 x 1-3/4L KEY	91-G0384	1	BRAKE PRESS. PLATE ASSY.
13-3510	4	CHAIN GUIDE	81-21CGS00600	1	6 PLASTIC CARD GUIDE	91-G0531	1	LIMIT SHAFT ASSEMBLY
15-3613 (N)	1	50B13 SPROCKET	82-FX25-20 (N)	4	1/4-20 x 1-1/2 FH SCREW	MG4101514	1	STRIP, POWER TERMINAL

PARTS DESIGNATED (N) ARE NOT SHOWN ON DRAWING.
PARTS HAVING ONE OR MORE X IN THE PART NO. VARY FROM MODEL TO MODEL. SEE “VARIABLE PARTS” BELOW.
PARTS DESIGNATED (3PH) ARE PRESENT ON 3PH OPERATORS ONLY.

SL590 Variable Parts			
Variable	**P/N**	**Description**	**Used On**
20-XXXX	20-1050C-2	MOTOR: 1/2 HP - 115/208/230VAC - 1Ø - 60hz	SL590-50-11-S3, SL590-50-21-S3, SL590-50-81-S3
	20-1075C-2	MOTOR: 3/4 HP - 115/208/230VAC - 1Ø - 60hz	SL590-75-11-S3, SL590-75-21-S3, SL590-75-81-S3
	20-1100	MOTOR: 1 HP - 115/208/230VAC - 1Ø - 60hz	SL590-100-11-S3, SL590-100-21-S3, SL590-100-81-S3
	20-1150C-2	MOTOR: 1-1/2 HP - 115/208/230VAC - 1Ø - 60hz	SL590-150-11-S3, SL590-150-21-S3, SL590-150-81-S3
	20-3050C-4	MOTOR: 1/2 HP - 208/230/460VAC - 3Ø - 60hz	SL590-50-23-S3, SL590-50-43-S3, SL590-50-83-S3
	20-3075C-4	MOTOR: 3/4 HP - 208/230/460VAC - 3Ø - 60hz	SL590-75-23-S3, SL590-75-43-S3, SL590-75-83-S3
	20-3075M-5	MOTOR: 3/4 HP - 575VAC - 3Ø - 60hz	SL590-50-53-S3, SL590-75-53-S3
	20-3100C-4	MOTOR: 1 HP - 208/230/460VAC - 3Ø - 60hz	SL590-100-23-S3, SL590-100-43-S3, SL590-100-83-S3
	20-3100M-5	MOTOR: 1 HP - 575VAC - 3Ø - 60hz	SL590-100-53-S3
	20-3200C-4	MOTOR:2 HP - 208/230/460VAC - 3Ø - 60hz	SL590-150-23-S3, SL590-150-43-S3, SL590-150-83-S3, SL590-200-23-S3, SL590-200-43-S3, SL590-200-83-S3
	20-3200C-5	MOTOR: 2 HP - 575VAC - 3Ø - 60hz	SL590-150-53-S3, SL590-200-53-S3
21-XXXX	21-3260	24V TRANSFORMER, 50VA	ALL 115/230/208VAC - 1Ø and 208/230/460VAC - 3Ø MODELS
	21-10298	24V TRANSFORMER, 100VA	ALL 575VAC - 3Ø MODELS
22-XXX	22-120	120VAC BRAKE SOLENOID	ALL 115VAC - 1Ø MODELS
	22-240	230VAC BRAKE SOLENOID	ALL 208/230/460VAC - 1Ø and 3Ø MODELS
	22-575-1	575VAC BRAKE SOLENOID	ALL 575VAC - 3Ø MODELS
23-XXXX	23-3001	POWER LINE SWITCH	ALL 1Ø MODELS
	23-3005	POWER LINE SWITCH	ALL 3Ø MODELS
24-XXXX	24-115-1	115VAC RELAY	ALL 115VAC - 1Ø MODELS
	24-230-5	208/230VAC RELAY	ALL 208/230VAC - 1Ø MODELS
25-XXXX	25-2006	6A FUSE	SL590-50-21-S3, SL590-50-81-S3, SL590-75-81-S3
	25-2008	8A FUSE	SL590-75-21-S3
	25-2010	10A FUSE	SL590-50-11-S3, SL590-100-21-S3, SL590-100-81-S3
	25-2015	15A FUSE	SL590-75-11-S3, SL590-150-21-S3, SL590-150-81-S3
	25-2020	20A FUSE	SL590-100-11-S3
	25-2025	25A FUSE	SL590-150-11-S3
	25-4002-5	1.6 - 2.5A FUSE	SL590-75-53-S3, SL590-100-43-S3, SL590-100-53-S3
	25-4004	2.5 - 4.0A FUSE	SL590-150-43-S3, SL590-150-53-S3
	25-4006	4.0 - 6.0A FUSE	SL590-100-23-S3, SL590-100-83-S3
	25-4008	5.5 - 8.0A FUSE	SL590-150-23-S3, SL590-150-83-S3

Warranty Policy

Seller warrants that the goods are free from defect in materials and/or workmanship for a period of one year from the date of shipment from the F.O.B. point. Goods returned to Seller for warranty repair within the warranty period, which upon receipt by Seller are confirmed to be defective and covered by this limited warranty, will be repaired or replaced (at Seller's sole option) at no cost and returned pre-paid. Defective parts will be repaired or replaced with new or factory-rebuilt parts at Seller's sole option. Authorization instructions for the return of any goods must be obtained by Buyer from Seller before returning the goods. The goods must be returned with complete identification, freight prepaid, and in accordance with Seller's instructions or they will not be accepted. In no event will Seller be responsible for goods returned without proper authorization or identification.

THIS LIMITED WARRANTY IS IN LIEU OF ANY OTHER WARRANTIES, EXPRESS OR IMPLIED, INCLUDING ANY IMPLIED WARRANTY OF MERCHANTABILITY OR FITNESS FOR A PARTICULAR PURPOSE, OR OTHERWISE, AND OF ANY OTHER OBLIGATIONS OR LIABILITY ON SELLER'S PART. THIS LIMITED WARRANTY DOES NOT COVER NON-DEFECT DAMAGE, DAMAGE CAUSED BY IMPROPER INSTALLATION, OPERATION OR CARE (INCLUDING, BUT NOT LIMITED TO ABUSE, MISUSE, FAILURE TO PROVIDE REASONABLE AND NECESSARY MAINTENANCE, OR ANY ALTERATIONS TO THIS PRODUCT), LABOR CHARGES FOR DISMANTLING OR REINSTALLING A REPAIRED OR REPLACED UNIT, OR REPLACEMENT BATTERIES. UNDER NO CIRCUMSTANCES SHALL SELLER BE LIABLE FOR CONSEQUENTIAL, INCIDENTAL OR SPECIAL DAMAGES ARISING IN CONNECTION WITH THE USE, OR INABILITY TO USE, THIS PRODUCT. IN NO EVENT SHALL SELLER'S LIABILITY FOR BREACH OF WARRANTY, BREACH OF CONTRACT, NEGLIGENCE OR STRICT LIABILITY EXCEED THE COST OF THE PRODUCT COVERED HEREBY. NO PERSON IS AUTHORIZED TO ASSUME FOR US ANY OTHER LIABILITY IN CONNECTION WITH THE SALE OF THIS PRODUCT. Some states do not allow the exclusion or limitation of consequential, incidental or special damages, so the above limitation or exclusion may not apply to you. This limited warranty gives you specific legal rights, and you may also have other rights which vary from state to state.

COPYRIGHT© 2001
ALL RIGHTS RESERVED

This document is protected by copyright and may not be copied or adapted without the prior written consent of LiftMaster. This documentation contains information proprietary to LiftMaster and such information may not be distributed without the prior written consent of LiftMaster. The software and firmware included in the LiftMaster product as they relate to this documentation are also protected by copyright and contain information proprietary to LiftMaster.

FOR TECHNICAL SUPPORT

Call our toll free numbers:

(800) 323-2276
(800) 998-9197

Installation and service information is available six days a week.

TO ORDER REPAIR PARTS

Call our toll free numbers:

(800) 528-2806
(800) 998-9197

Prepare to provide the following information when ordering repair parts:

- **Part Number**
- **Part Name**
- **Model Number**