Doc. 600310 (01-20290)
Rev C

INSTALLATION AND OPERATION INSTRUCTIONS FOR THE

MODEL SL 1000-XI

SLIDE GATE OPERATOR

(-73 BOARD)

CHAMBERLAIN®
LiftMaster®
PROFESSIONAL

TABLE OF CONTENTS

THE LIFTMASTER MODEL SL 1000-X1 2
SAFETY SUMMARY 3
BASIC INSTALLATION HINTS AND RULES 4
PART 1 SITE PREPARATION 5
A. LOCATION AND LAYOUT 5
B. PAD AND MOUNT 6
C. POWER WIRING 7
D. LOOP DETECTORS 7
E. TELEPHONE CONNECTION 7
F. MASTER/SLAVE INTERCONNECTION (MASTER/SLAVE SYSTEM ONLY) 7
G. OTHER CONNECTIONS 7
PART 2 SYSTEM INSTALLATION 8
A. MOUNTING GATE OPERATOR 8
B. INSTALLING LOCK HASP 9
C. CONNECTING POWER 10
D. RUNNING INPUT WIRING 10
E. SETTING GATE OPEN DIRECTION SWITCHES S1 AND S2 10
F. POWER UP PROCEDURE 11
G. USING MANUAL CONTROLS 11
H. SETTING LIMIT CAMS 12
I. GATE SENSITIVITY ADJUSTMENTS 13
J. POWER FAIL OPERATION OPTION CONNECTION 15
K. CONNECTING INPUT WIRING 16
L. BASIC GATE OPERATOR PROGRAMMING 17
M. POST INSTALLATION PROCEDURES 18
N. FINAL ASSEMBLY OF GATE OPERATOR 20
PART 3 MODEL SL 1000-X1 OPTIONS 21
A. POWER FAIL OPERATION OPTION 21
B. LIFTMASTER LOOP DETECTOR BOARDS 21
PART 4 TROUBLESHOOTING AND MAINTENENACE 22
A. TROUBLESHOOTING 22
B. FAULT LIST 26
C. FAULTS AND THEIR CAUSES 26
D. MAINTENANCE 28
APPENDIX A SYSTEM OPERATION REFERENCE 31
CONTROLS, INDICATORS, INPUTS AND ADJUSTMENTS 31
CONTROLS 32
INDICATORS 32
FUNCTIONAL INPUTS 32
ADJUSTMENTS 35
CONNECTORS 35
APPENDIX B SL 1000-X1 PARTS LIST 36
GLOSSARY 37
NOTICE TO CANADIAN USERS 38

The LiftMaster Model SL 1000-X1

The LiftMaster model SL 1000-X1 Slide Gate Operator is a full-featured, commercial gate operator with a master/slave wiring capability. The gate operator has the following features:

- **Dynamic motor braking** limits gate overtravel.
- **Alternate action OPEN/CLOSE inputs.**
- **Manual switch inputs** override other commands.
- **Programmable reclose timer.**
- **Master/slave operation** for two operators on bi-part and vehicle trap.
- **Automatic OPEN/CLOSE and Alert Call schedules** include holidays.
- **Cycle counter** is able to initiate a service request call to a predetermined number.
- **Event recording memory** keeps track of all commands and actions, maintains data even during power interrupts, and can be retrieved by modem to your computer. Very helpful in troubleshooting.
- **Automatic service request call** is activated in the event of a fault or warning condition. A call can be made to any telephone or pager and will include system ID number and fault code.
- **12-button keypad and 7-segment display** to facilitate programming, service and operation.
- **Selectable anti-tailgate function** prevents two cars from entering on one open command.
- **Relay output** can be programmed to operate on a variety of conditions including gate moving, service requested, and system failure.
- **Gate lock relay** can be used for electromagnetic locks and CCTV cameras or lights.
- **Automatic open/close schedule.**
- **Open motor detection** indicates when the motor is not drawing any current.
- **Senses obstructions** through adjustable Peak motor current sense.
- **Two separate peak motor current sense adjustments** for reversing direction or stopping; one for right motion and the other for left motion.
- **Initial inrush current sense adjustment** offsets initial inrush current to the motor.
- **Automatic fault retry** allows the operator to continue an operation up to twice following a fault condition. The retry can include a timed reversal of direction to release or move an obstacle.
- **Selectable Automatic Gate Closure feature** closes the gate when power is restored after an outage, if gate is at open limit.
- **Power Fail Operation option** automatically opens (Fail Safe) or closes (Fail Secure) gate (user's choice) if AC power fails.
- **Optional loop detector add-on boards** plug into the controller board for Interrupt, shadow and exit loops.
- **Two 115 VAC accessory plugs** provided.
- **24 VAC** accessory power provided.
- **A 30:1 gearbox** is used to prevent the gate from being pushed open.
- **Controls any gate travel distance** up to 45 feet.
- **Handles any gate weight** up to 1000 pounds.
- **Standard size 40 chain** is provided. Size 40 chain can be used with no other changes.
- **Diagnostic LEDs** on controller board indicate gate operator actions and assist in troubleshooting.
- **Inside and outside Interrupt Loops** enhance gate control and distinguish between entering and exiting traffic.
- **Remote telephone interface** permitting gate operator programming and diagnostics.

DIMENSIONS		WEIGHT	ELECTRICAL
Height	25 ½"	107 Lbs.	115 VAC, Single Phase, 60Hz., 8 amp
Width	15"	(121 Lbs. With Power	(A separate 20 AMP circuit is
Depth	21"	Fail Operation option.)	required by most codes.)
		7 lbs. Accessory Kit	

SAFETY SUMMARY

It is imperative that everyone involved in the installation or operation of the LiftMaster model SL 1000-X1 Slide Gate Operator read the following warnings.

WARNING!

- **A vehicle gate is a large, heavy object that is moved by an electric motor. A moving gate can cause serious injury or death! The safety and well-being of other depends on the installation of a safe system.**
- **Improper installation of a gate operator can result in a dangerous system.**
- **Gate operators can present serious hazards to persons in the immediate area when not controlled in a safe manner. Choose one or more controls that together will allow complete control of the gate. Most importantly, the gate must be able to be stopped at all times in case of emergency, and the emergency control should be conveniently located, clearly marked and visible.**
- **All controls must be kept out of reach of small children. Serious injury or death can result from children play with controls.**
- **All controls should be located so the person operating them can see the full area of gate movement.**
- **Gate operators and associated control equipment should be installed by qualified professional installers who should observe the following safe installation procedures:**
  1. **<u>Power should always be disconnected whenever installing, wiring or servicing a gate operator</u>. Moving chains in gate operators can catch clothing or fingers and cause severe injury.**
  2. **Installation of wiring should comply with local building and electrical codes.**
  3. **All manual gate locks should be disabled to avoid damage to the gate or gate operator should the lock become engaged after the operator is installed.**
  4. **All operator controls and safety equipment should be tested at the conclusion of installation to be sure they are functioning properly.**
  5. **The operation of the gate controls and safety equipment should be reviewed with the owner and/or end user of the automated gate system. They should also be informed of the need to maintain control and safety equipment on a regular basis. Safety equipment should be checked monthly to ensure it is working properly. All installation manuals and safety information should be left with the owner.**
  6. **Moving gates have pinch points and entrapment zones which can be extremely dangerous to pedestrians, especially small children.**

BASIC INSTALLATION HINTS AND RULES

PLEASE READ THIS SECTION VERY CAREFULLY BEFORE BEGINNING YOUR INSTALLATION.
In the sections that follow, detailed procedures are discussed for each step required to install a model SL 1000-X1 system. In addition to these specific procedures, there are a number of general hints and rules which will help ensure that your installation will be done correctly and efficiently. These are discussed below.

1. ***UNDERSTAND THE SYSTEM AND INSTALLATION SITE THOROUGHLY.*** The SL 1000-X1 is a flexible and reliable gate operator system, but the quality of service depends directly on the quality of installation. Please read these instructions carefully and study the applicable diagrams before planning your installation. In particular, understand any site characteristics that may affect the system installation.

WARNING

2. ***INSTALL PERMANENT WIRING.*** U.L. specifications require the model SL 1000-X1 system to be permanently wired. Refer to your local wiring code for specific information.
   WARNING: Damage caused by faulty wiring is not covered by warranty.

3. ***GROUND THE SYSTEM.*** The system contains parts which may be damaged by static discharge. A proper earth ground connected to the gate operator housing (at the lower left grounding screw shown in Figure 16) will significantly reduce the chances of damage or improper operation. The shielding in the cables specified for all remote sensors and controls should also be connected to earth ground at the controller end of the cable only.

   To be effective, the ground connection must be made by running 12 awg copper wire to a good ground point (e.g., an electrical panel, a metallic cold water pipe that runs into the earth, or a grounding rod at least 10 feet in length that is driven into the earth) within 12 feet of the system. Even if you have a good earth ground, you should try to discharge any static before handling the boards.

   WARNING: Damage caused by static discharge or lightning is not covered by warranty.

4. ***PROVIDE POWER FROM A DEDICATED SOURCE.*** The outlet into which you connect the Gate Operator should be wired to its own circuit breaker. This will reduce the line noise introduced into system power and minimize the risk of having other equipment interrupt system operation.

5. ***DO NOT OVERLOAD THE TERMINAL BLOCKS.*** The terminal blocks used in the gate operator are removable and the pins are soldered into the boards. To connect your wires, remove the "head" from the correct terminals and open the screws. Insert the wire into the correct opening on the front and tighten the screw until the wire is held firmly. When you have made all connections for a given "head", plug it back onto the inputs designated for that terminal block.

   Stranded wire must be between 16 and 24 awg. Solid wire must be between 18 and 24 awg. This is the total thickness measurement so, if you are putting two wires in, the combined thickness must fall within this range. **NEVER** try to insert more than two wire per terminal.

6. ***ENSURE GOOD CONNECTIONS.*** A light tug on the wire will tell you if the connection is secure. When reconnecting system components, make sure all pins are straight on chips, connectors, and terminal block heads.

7. ***READ MARKINGS CAREFULLY.*** The connection points are marked on the boards clearly. Before making any connection, be sure to read the marking and check it against the corresponding figure in these instructions so that you understand the connection you are making.

8. ***TRAIN YOUR CUSTOMERS THOROUGHLY.*** Although customer responsibility is limited to proper installation, the quality of service is determined by care of system programming. Ensure that the customer has a copy of this manual to guide them. It will save you and them lots of inconvenience and aggravation later.

PART 1
SITE PREPARATION

A. LOCATION AND LAYOUT

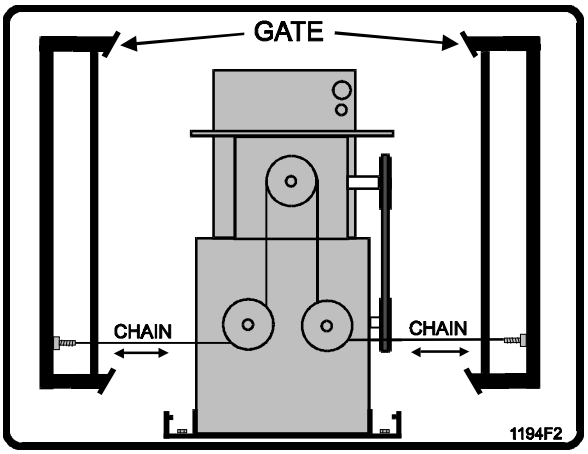

Figure 1. Front Drive.

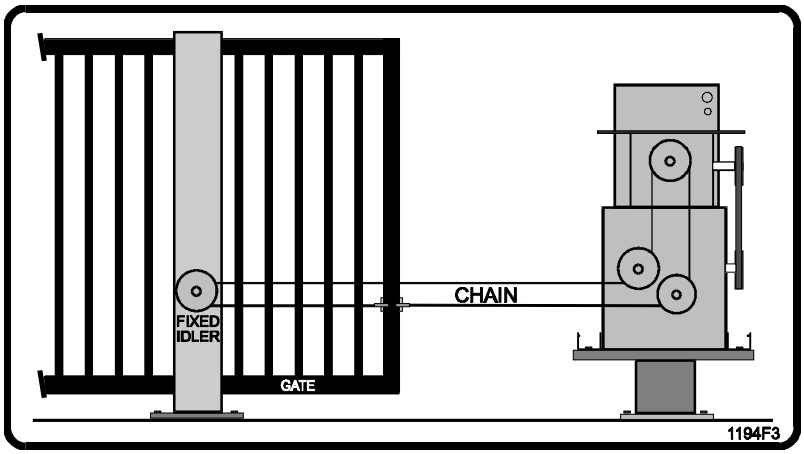

Figure 2. Rear Drive.

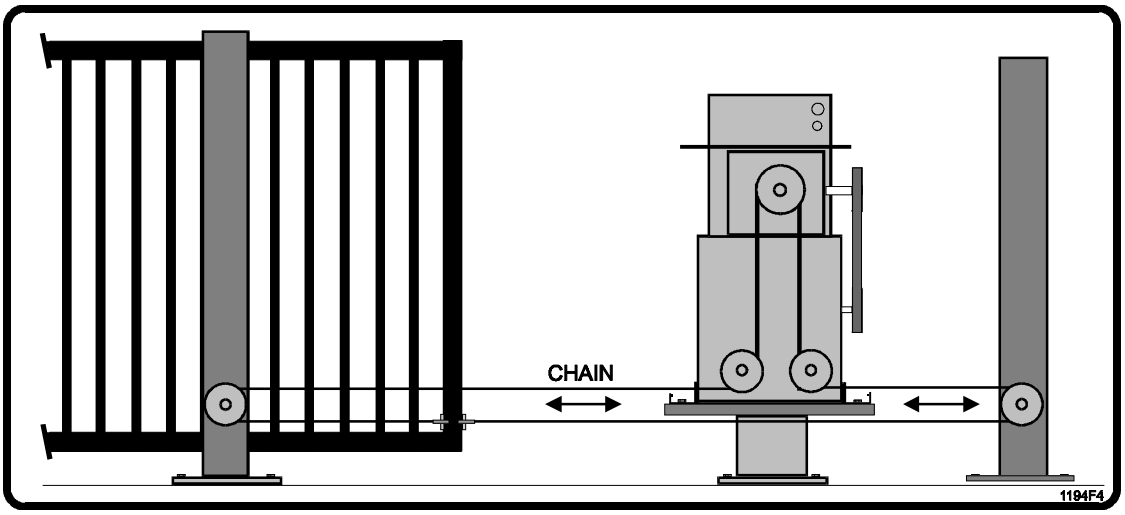

Figure 3. Mid Drive.

1. Always install the gate operator on the inside of the fence line, never on the public side of the fence.
2. All manual controls and activating devices should be mounted at least 6 feet away from the gate to provide safety.
3. Allow enough clearance around the gate and the gate operator for installation and service.
4. The gate operator can provide front and rear drive configuration (Figures 1 and 2), and mid drive can be used if the operator is post mounted and clearance is provided under the operator for the chain anchor on the gate (Figure 3).
5. Center idlers may be required on the Mid Drive and Rear Drive configurations to keep the chain from dragging on itself.

NOTE: Master links and tension adjusters are provided with the gate operator.

B. PAD AND MOUNT

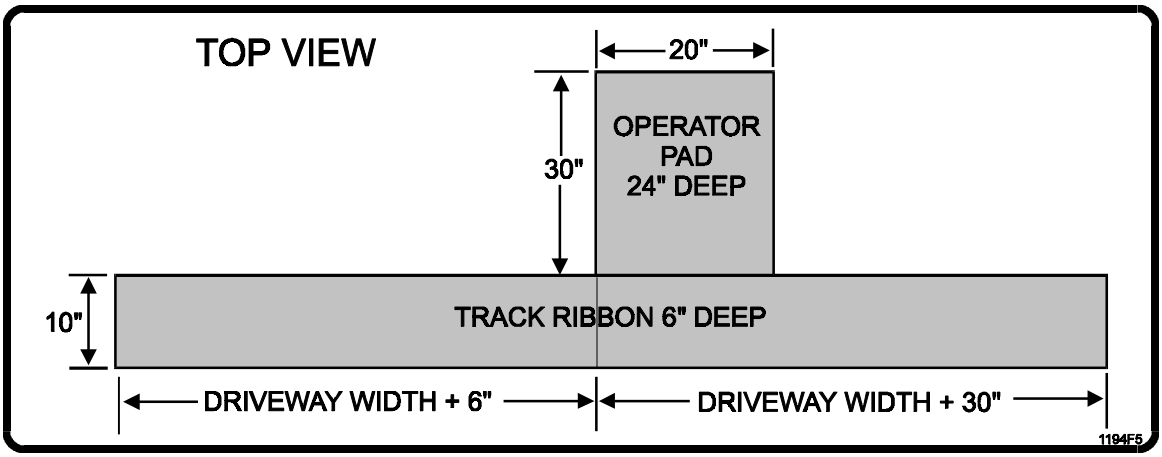

Figure 4. Pad and Track Ribbon.

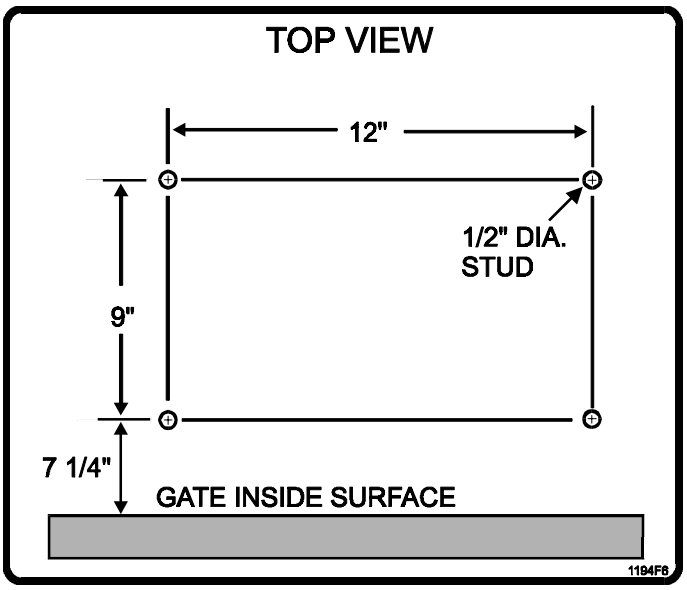

Figure 5. Bolt Down Pattern.

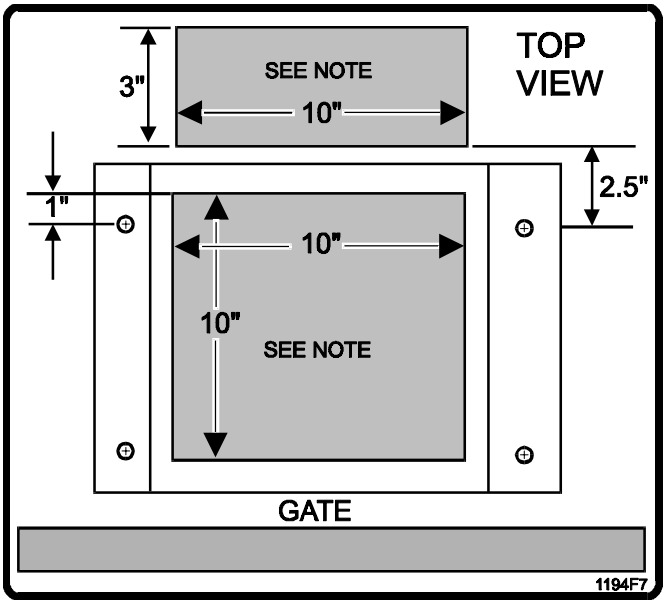

Figure 6. Conduit Entrance Areas.

1. The concrete pad must be sufficient to support the gate operator and the forces created by the moving gate. LiftMaster recommends a pad 20” wide by 30“ long by 24” deep (Figure 4).
2. The operator must be level and parallel to the gate, so the pad should be level and about 4” above ground level to prevent water entrance.
3. Four anchor bolts are required to secure the gate operator to the pad. The mounting holes in the gate operator are 5/8” in diameter. ½” x 3 ½” Red Head bolts are recommended (Figure 5).
4. Be sure to provide access for wiring conduits (Figure 6).
   NOTE: Shading indicates acceptable areas for conduit stub access.
5. Track installation should be on concrete, not asphalt, and should be at least 10” wide and 6” deep.
6. A 6” gate overlap at the open end of the gate when closed should be provided.
7. A 30” gate overlap at closed end of the gate when closed should be provided.

C. POWER WIRING

- Provide a separate conduit stub for the AC power.
- Each gate operator requires a 115 VAC 20 AMP single phase circuit. **NOTE:** Master and Slave units each require separate circuits to prevent false overcurrent faults.
- Wiring must comply with the Electrical Code for operating a ½ HP motor (suggest 12 AWG for up to 300' and 10 AWG for up to 500' long wire runs).
- Be sure to pull a ground wire in the conduit for the connection to the gate operator.

IMPORTANT: Do not rely on metallic conduit for earth ground.

D. LOOP DETECTORS

- The gate operator has a shelf that can support loop detector electronics. Power for the loop detector can come from the auxiliary 115 VAC plugs in the gate operator or from the 24 VAC provided by the gate operator control board.
- Conduit provisions should be made for the "loop" wire entrance to the loop detector.
- The shelf space provided is approximately 4" x 10" x 18" high.
  NOTE: Shelf space on systems without the Power Fail Option is about 10" x 10" x 18"
- Wiring should be 16-24 AWG stranded or 18-24 AWG solid.

NOTE: Optional LiftMaster-supplied loop detector add-on boards are available, both pre-installed and for installation in the field. See Part 3, SL 1000-X1 Options.

E. TELEPHONE CONNECTION

- Provisions should be made for a conduit entrance into the gate operator for the telephone line.
- A single twisted pair wire 18 AWG to 24 AWG, will be connected from the telephone company termination block through the conduit to J9 on the control board. Polarity is not important.

NOTE: Do not run telephone and AC power wire in the same conduit.

F. MASTER/SLAVE INTERCONNECTION (MASTER/SLAVE SYSTEM ONLY)

- A conduit should be provided for the Master/Slave interconnection cable, run between the Master and Slave units.
- Two shielded twisted pair wire 16 AWG to 24 AWG will be connected between the two units at TB5 on the controller board.

NOTES:
1. Do not run the Master/Slave cable and AC power wires in the same conduit.
2. Master/Slave interconnection cable should not exceed 3000 feet in length.

G. OTHER CONNECTIONS

- Provisions should be made for conduit entrance into the gate operator for external activating devices such as key switches, telephone entry systems, loops, etc.
- Wire size requirement: 16-24 AWG stranded or 18-24 AWG solid wire should be used.

PART 2
SYSTEM INSTALLATION

A. MOUNTING GATE OPERATOR

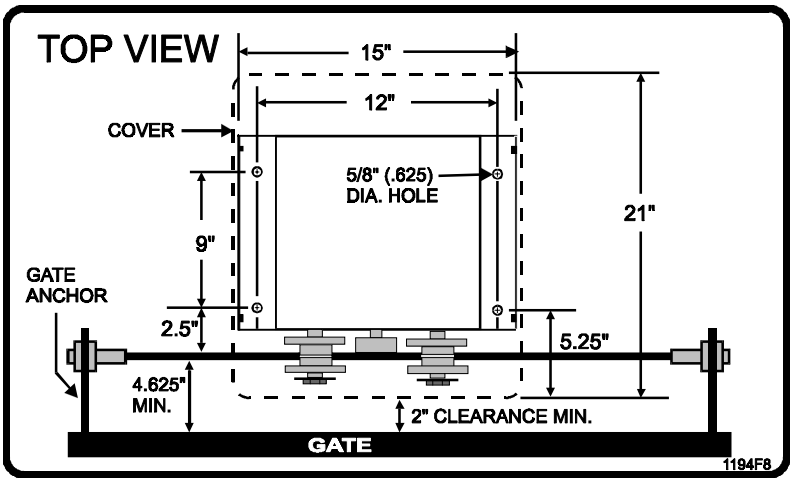

Figure 7. Mounting.

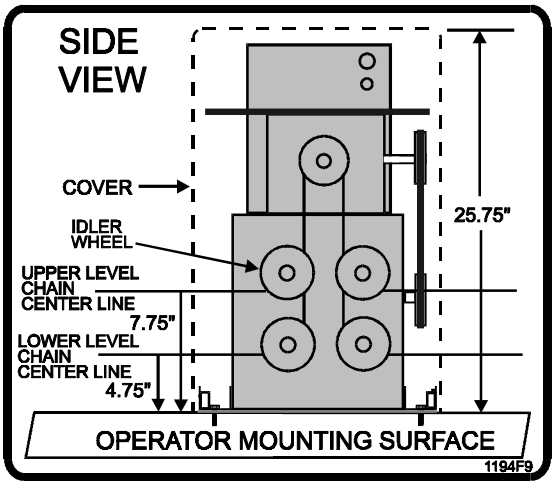

Figure 8. Chain Height.

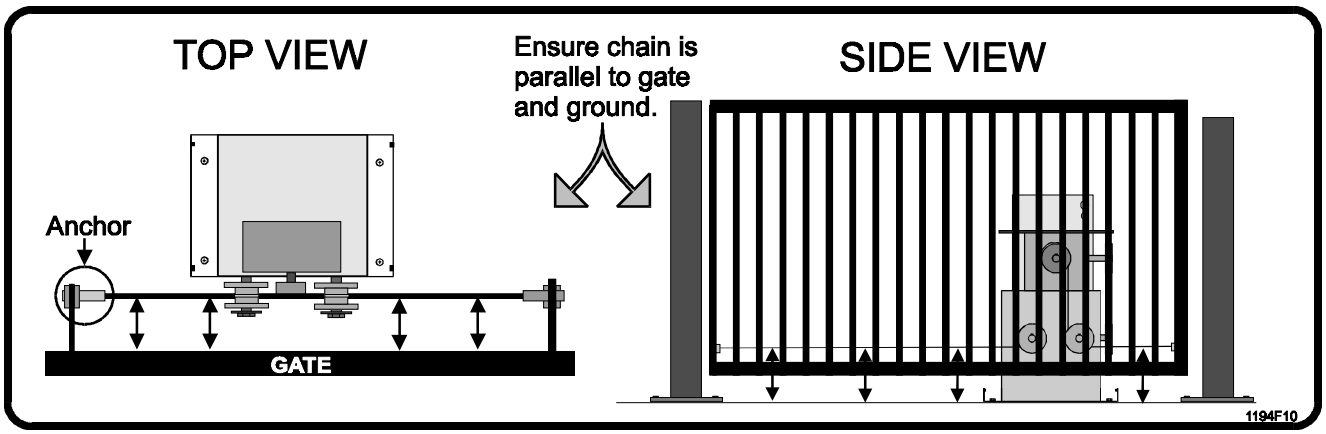

Figure 9. Parallel Chain Location.

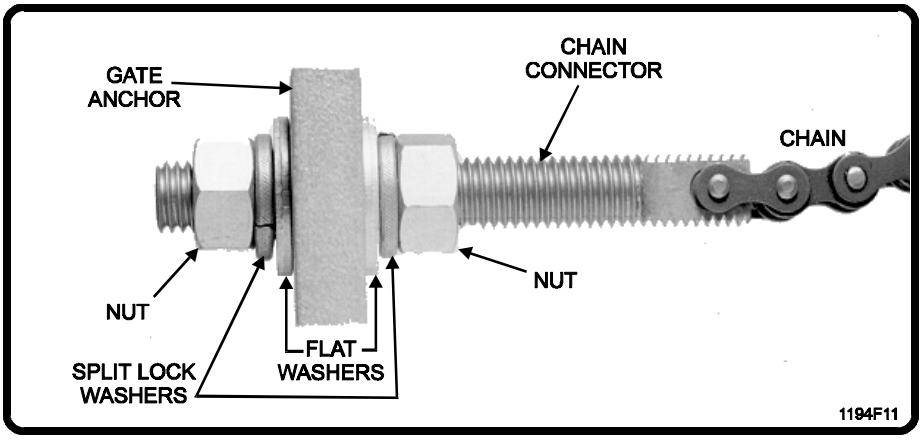

Figure 10. Installing Chain on Gate Anchor.

WARNING

For safety reasons, the Power Fail Operation Option is shipped with the battery unconnected to the system. **Do not connect the battery until all other installation and alignment procedures have been completed.** Failure to observe this warning may result in the Power Fail Operation Option moving the gate at unexpected moments.
To avoid injury, always turn off the unit power switch before working on gate.

1. Remove the 4 protective bolts that hold the cover on, lift the cover off, and set aside.
2. Remove the assembly kit and parts.
3. Remove the 4 bolts that attach the gate operator to the shipping pallet.
4. Mount gate operator on the cement pad using the previously installed anchor bolts (studs). Be sure the operator mounting is level and the chain face is parallel to gate movement (Figures 7 and 8).
5. Move the idler wheel mounting if required by this specific installation (Figure 8).
6. Attach gate anchor to gate by welding (Figure 9).
7. Install the chain to the gate using supplied hardware. Adjust nuts for proper chain tension to prevent the chains from loosening and twisting (Figure 10).
8. Ensure the chain is parallel to gate travel both horizontally and vertically (Figure 9).
9. Connect the power conduit into the switch box.

B. INSTALLING LOCK HASP

The supplied lock hasp may be installed to prevent unauthorized access to the gate operator.

1. Install the lock hasp on the two holes underneath the control box. Orient the hasp with the tongue at the center of the gate operator chassis and secure in place with supplied hardware.
2. After installing the gate operator cover, a padlock may be used to secure the cover to the lock hasp.

INSTALLATION NOTES

C. CONNECTING POWER

CAUTION

Ensure that the AC power circuit breaker is turned off before wiring power to the switchbox.

Run power cables through conduit to Gate Operator, then connect wires to the switch box as shown in Figure 11:

1. Wire nut the hot (black) wire to the black pig tail.
2. Wire nut the neutral (white) wire to the white pig tail.
3. Wire nut the ground (green) wire to the green pig tail.
4. Dress all wiring inside the switch box and install cover.

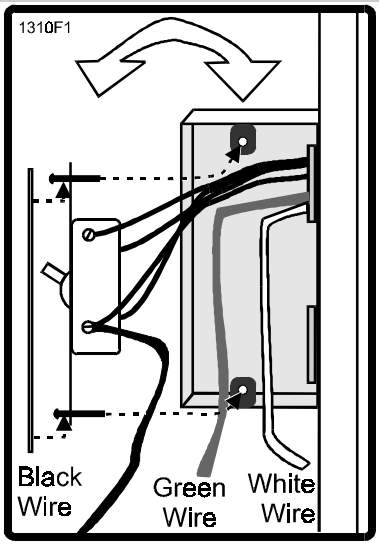

Figure 11. AC Wiring.

D. RUNNING INPUT WIRING

1. Remove the plastic control box cover.
2. Run wires from input components and Master/Slave conduits into control box.
3. For Master/Slave wiring, refer to Installation and Operation Instructions for the LiftMaster Master/Slave System for X1 Series Gate Operators (-73 Board), Part 2 (Document Number 6001376).

WARNING

Route but do not connect input wires at this time. If inputs are connected now, the gate operator may activate at random during installation, potentially injuring installation personnel.

E. SETTING GATE OPEN DIRECTION SWITCHES S1 AND S2

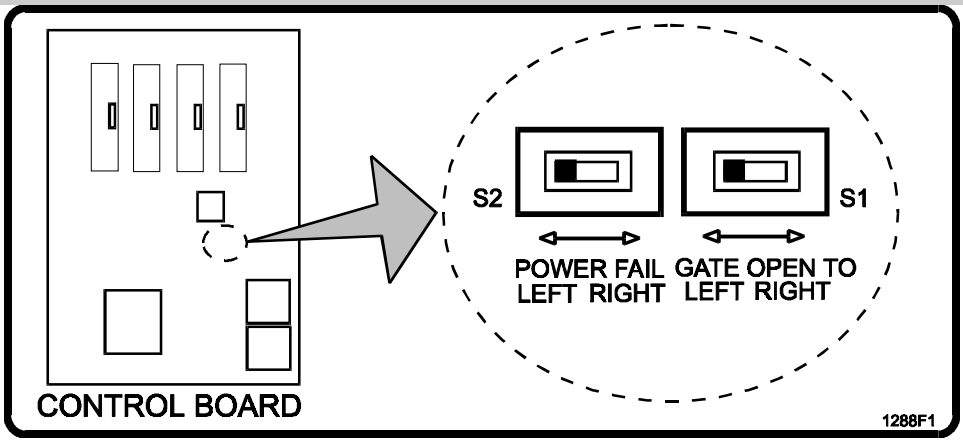

Figure 12. Gate Direction, Power Fail Option Switch Location.

The gate motion left and right is determined by looking at the gate from the gate operator side.

1. Gate opening direction is set by switch S1 on the control board. The switch is sensed only on power up, so it should be set when the power is off.
2. Ensure power is off.
3. Set the switch to the left or right as required.

If the system was ordered with the Power Fail Operation option:

4. The power failure gate opening direction is set by switch S2, located next to switch S1 on the control board. Set the switch to the left or to the right as required.

F. POWER UP PROCEDURE

CAUTION

If gate is positioned at the 'open' limit, gate will automatically close when power is switched on. Position gate either at the closed limit or at no limit when preparing to switch power on. Always use extreme caution and follow all warnings in the Safety Summary.

1. Turn on circuit breaker that provides power to gate operator.
2. Turn on gate operator power switch and *verify that the seven-segment LED display above the keypad sequentially spells out "HELLO".*

NOTE: If the display does not follow this pattern, the controller board may not be working correctly. Stop installation and call LiftMaster Technical Support for assistance.

- The only LEDs that should remain on are MAGLOCK and CLOSE LIMIT or OPEN LIMIT, if one of the limit switches are engage.
- If gate is positioned at the open limit, it will automatically cycle to the full closed position. If gate is positioned anywhere else, it will not move until commanded.

G. USING MANUAL CONTROLS

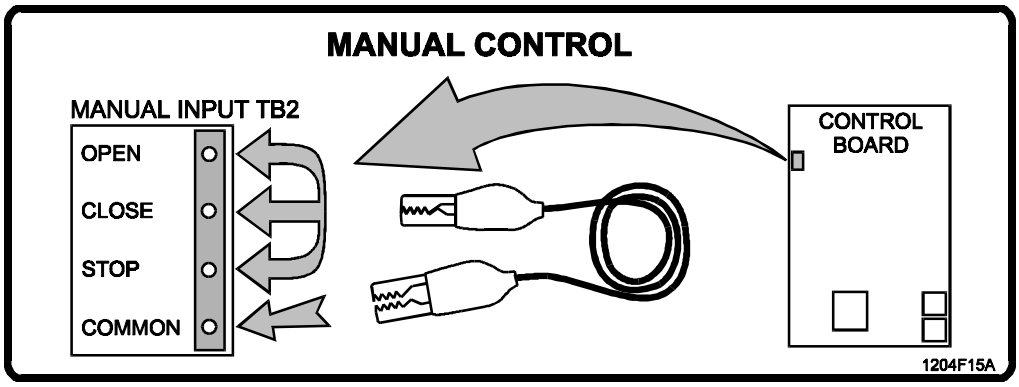

Figure 13. Manual Controls, Location and Operation.

If necessary, use the manual controls on Manual Input Terminal TB2 (OPEN, CLOSE, and STOP, as shown in Figure 5), to move the gate arm during system installation.

- **To open the gate:** connect the OPEN and STOP terminals to the COMMON terminal.
- **To close the gate:** connect the CLOSE and STOP terminals to the COMMON terminal.
- **To stop the gate:** disconnect the STOP terminal from the COMMON terminal.

IMPORTANT NOTE

If the STOP terminal is disconnected from the Common terminal, the gate is prevented from moving and no command will affect the gate.

H. SETTING LIMIT CAMS

- The left limit cam is close to the gearbox. The right limit cam is close to the end of the shaft (see Figure 14).
- Limit cams are adjusted by releasing the cam lock plate, rotating the cams, then reseating the cam lock plate. When the adjustment is finished, be sure the cam lock plate is seated into the notches of **BOTH** CAMS.
- Each cam rotation (360°) equals 11" of gate travel. Each notch equals 5/8" of gate travel.

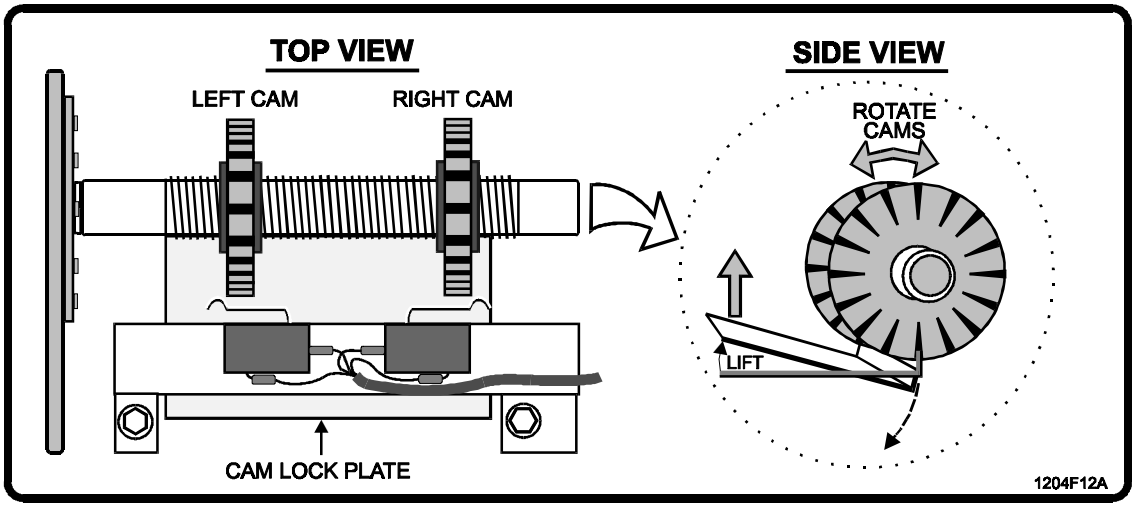

Figure 14. Limit Cam Setting.

NOTE: The following procedures are for FRONT drive gates. For MID and REAR drive gates, reverse Left Gate and Right Gate procedures.

1. SETTING RIGHT GATE LIMIT CAMS (gate opens right, as seen from the gate operator side)

1. Make sure that switch S1 is set to the "Right" position.
2. Turn on gate operator power switch.
3. Using manual OPEN and STOP, move the gate to its proper open limit position.
4. Rotate the Left cam until it just barely closes the limit switch.
5. Using manual CLOSE and STOP, move the gate to its proper closed limit position.
6. Rotate the Right cam until it just barely closes the limit switch.
7. Open and close the gate to check the limit cam settings. If required, readjust the limit cams until they are set properly.

2. SETTING LEFT GATE LIMIT CAMS (gate opens left, as seen from inside the property)

1. Make sure that switch S1 is set to the "Left" position.
2. Turn on gate operator power switch.
3. Using manual OPEN and STOP, move the gate to its proper open limit position.
4. Rotate the Right cam until it just barely closes the limit switch.
5. Using manual CLOSE and STOP, move the gate to its proper closed limit position.
6. Rotate the Left cam until it just barely closes the limit switch.
7. Open and close the gate to check the limit cam settings. If required, readjust the limit cams until they are set properly.

I. GATE SENSITIVITY ADJUSTMENTS

The gate operator monitors both average and peak motor current. When the gate encounters an obstruction, the gate operator senses the change in motor current and reverses the gate. Three sensitivity adjustments must be set for each installation:

- Right gate motion (R69)
- Left gate motion (R160)
- Inrush current (R203)

IMPORTANT NOTES:

- Current flow varies with temperature. Do not tune the sensitivity measurements too finely, or they may change with the time of day or seasons.
- If your installation requires setting switch S1 the "Open to Right" position, use the "Open to Right" adjustment procedures below. If your installation requires setting S1 to the "Open to Left" position, use the "Open to Left" adjustments following the "Open to Right" procedures.
- The minimum sensitivity is full clockwise and maximum sensitivity is full counter clockwise. These adjustments must be made while the gate is in motion.
- Before starting the adjustments, verify that the Left and Right reverse pots are set fully clockwise, and the Inrush pot is set to the 11 o'clock position.
- Make all adjustments in the order listed.

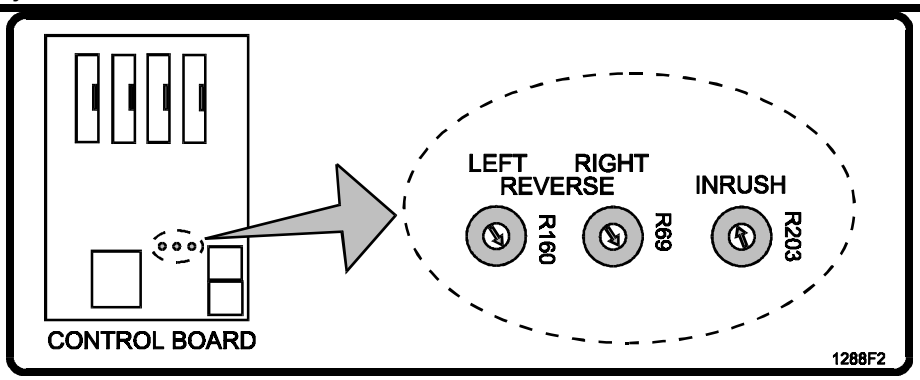

Figure 15. Gate Sensitivity Adjustments Location.

"OPEN TO RIGHT" ADJUSTMENT PROCEDURES

Right Gate Motion Adjustment (R69)

1. Initiate opening the gate.
2. Wait 4 to 5 seconds, then lightly "tug" against the edge of the gate to simulate an obstacle.
3. If the gate does not stop or back up, reclose the gate and adjust the pot slightly counterclockwise.
4. Repeat steps 1-3 until the gate stops or backs up when tugged and has the desired sensitivity.

Left Gate Motion Adjustment (R160)

1. Open the gate fully, then initiate closing the gate.
2. Wait 4 to 5 seconds, then lightly "bump" the leading edge of the gate to simulate an obstacle.
3. If the gate does not stop or back up, reopen the gate and adjust the pot slightly counterclockwise.
4. Repeat steps 1-3 until the gate stops or backs up when bumped and has the desired sensitivity.

“OPEN TO LEFT” ADJUSTMENT PROCEDURES

Left Gate Motion Adjustment (R160)

1. Initiate opening the gate.
2. Wait 4 to 5 seconds, then lightly “tug” against the edge of the gate to simulate in obstacle.
3. If the gate does not stop or back up, reclose the gate and adjust the pot slightly counterclockwise.
4. Repeat steps 1-3 until the gate stops or backs up when tugged and has the desired sensitivity.

Right Gate Motion Adjustment (R69)

1. Open the gate fully, then initiate closing the gate.
2. Wait 4 to 5 seconds, then lightly “bump” the leading edge of the gate to simulate an obstacle.
3. If the gate does not stop or back up, reopen the gate and adjust the pot slightly counterclockwise.
4. Repeat steps 1-3 until the gate stops or backs up when bumped and has the desired sensitivity.

INRUSH CURRENT ADJUSTMENT (R203)

1. Turn the pot fully counterclockwise.
2. Open the gate.
3. If the gate stops due to a fault condition, slightly adjust the pot clockwise.
4. Repeat steps 2 and 3 until the gate cycles without a fault.
5. Open gate fully, then initiate closing the gate.
6. If the gate stops or backs up due to a fault condition, slightly adjust the pot clockwise.
7. Repeat steps 6 and 7 until the gate cycles without a fault and has the desired sensitivity.

J. POWER FAIL OPERATION OPTION CONNECTION

a) Power Fail Operation Option Connection

CAUTION

Perform the next step (battery hookup) with care. Interchanging battery wires temporarily opens the resettable fuse on gate operator board, disabling the power fail option.

To ensure a safe installation, the gate operator is shipped with the battery partially disconnected from the Power Fail Option electronics. To enable this option:

- Connect white/red wire of option harness to positive (+) battery terminal.

b) Power Fail Operation Option Test

NOTES:

- The following procedures require turning main power to the gate operator off and on at its dedicated circuit breaker. ***DO NOT shut off the Gate Operator Power switch unless specifically directed by the procedure,*** since this will shut off everything, including the Power Fail Operation option.
- Because the battery may not be fully charged at the time of the test, we strongly suggest moving the gate only one foot when performing the power fail test.

1. Set Power Fail switch S2 to the same position as switch S1 (Figure 12).
2. Turn on gate operator power switch.
3. Using the manual controls (Figure 13), initiate gate opening, then stop the gate about one foot short of its fully open position.
4. Turn off main power to the gate operator at the dedicated circuit breaker. After about one minute the gate should start opening and stop at its fully open limit.
5. Turn on main power to the gate operator at the dedicated circuit breaker.
6. Set Power Fail switch S2 to the opposite position.
7. Using the manual controls, initiate gate closing, then stop the gate about one foot short of its fully closed position.
8. Turn off main power to the gate operator at the dedicated circuit breaker. After about one minute the gate should start closing and stop at its fully closed limit.
9. Turn on main power to the gate operator at the dedicated circuit breaker.
10. Set Power Fail switch S2 to the direction you want the gate to move after a power outage.

K. CONNECTING INPUT WIRING

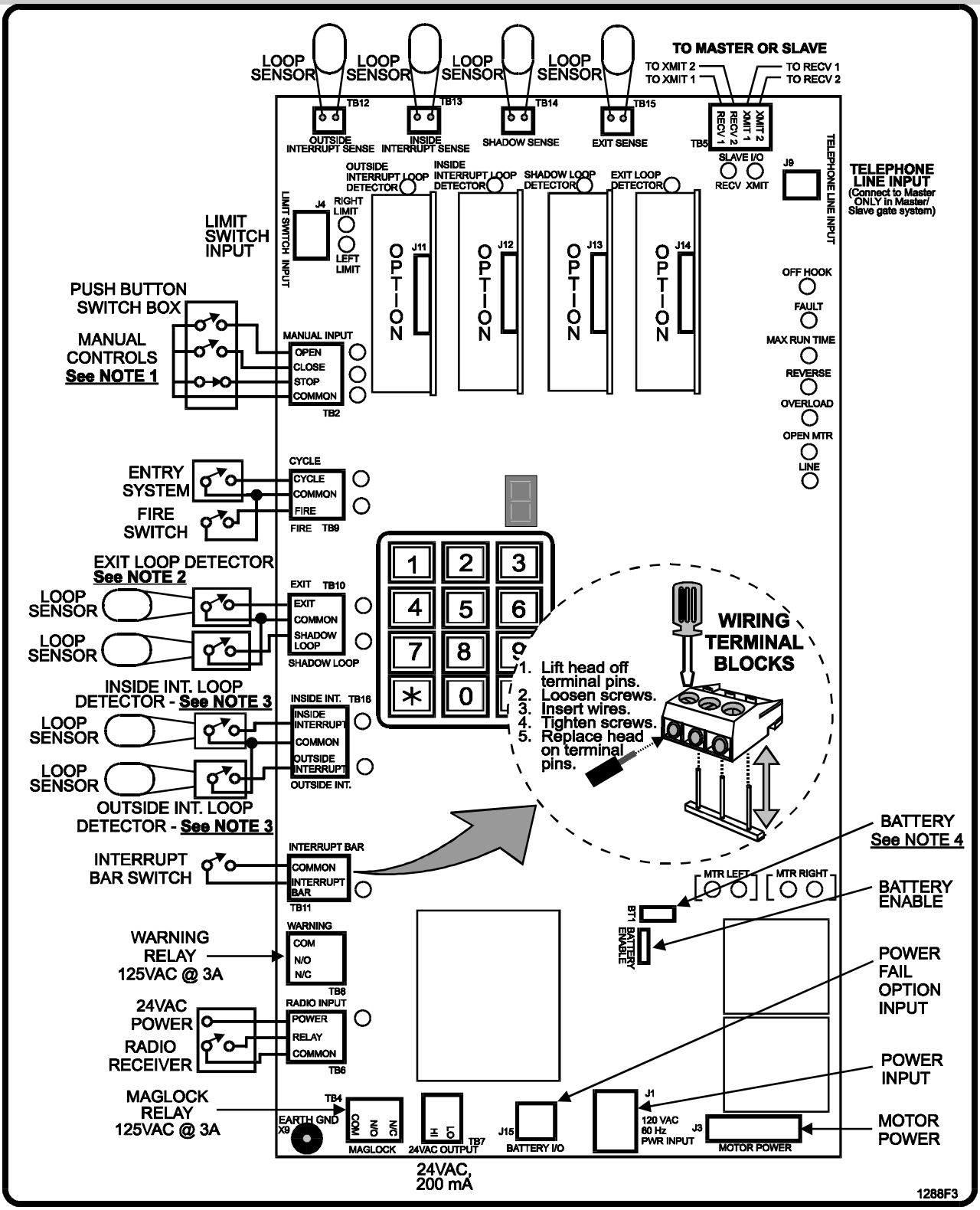

Figure 16. Control Board Wiring.

IMPORTANT: Before proceeding, see NOTES on next page.

1. Wire all external control devices to their connections on the control board as shown. See Appendix A for details on how each control input affects the gate operator.
2. MASTER/SLAVE ONLY: Connect the Master/Slave interconnect cable (see Installation and Operation Instructions for the LiftMaster Master/Slave System for X1 Series Gate Operators (-73 Board), Part 2, Section B, Document Number 6001376).

NOTES

1. Disconnecting the STOP terminal from the COMMON terminal stops the gate and prevents all commands from having any effect.
2. Manual Open does not activate the Reclose Timer.
3. If gate(s) are used for bi-directional traffic, the Exit Loop should be a directional loop detector.
4. Inside and Outside Interrupt Loops:
   - For maximum safety, Inside and Outside Interrupt loops require separate loop detectors.
   - If only one loop detector is used, the Outside loop must also be connected to the Inside loop detector.
   - **MASTER/SLAVE SYSTEMS ONLY:** To enhance Safety in Bi-Parting and Bi-Parting Latch systems, the Interrupt loops, Shadow loops and Interrupt Bar switches may be connected to both gates. If this is done, when connecting the two control boards, *do not interchange input and common terminals*. If terminals are interchanged, inputs will not be detected and controller boards may be damaged. See Series X1 Master/Slave Systems, Doc. No. 6001376.

L. BASIC GATE OPERATOR PROGRAMMING

Even if you plan to program the gate operator by modem, you may want to enter some immediate instructions during installation. The following list of instructions will help you set basic controls so the gate will operate properly until you have time for full programming, either directly or via modem. For complete programming instructions, refer to the enclosed manual SL 1000, 2000, 3000 and 3100–X1 Programming (-73 Board), Doc. No. 6001312. To program the SL 1000-X1 using your PC and modem, see SGoWin User Guide (-73 Board), Doc. No. 6001329.

To access programming mode: enter *** 000000 (3 asterisks, 6 zeroes)
To program a command: **a)** enter step number; **b)** enter required data; **c)** enter # (pound sign)
To exit programming mode: enter 00# (2 zeroes, 1 pound sign)

Step	Purpose	# of Digits	Default	Acceptable Input
01	Gate Type	1	1	0 = Slide, 1 = Swing, 2 = Barrier
02	Operator Type	1	0	0 = Single, 1 = Master, 2 = Slave
03	Pair Type (if Master/Slave)	1	0	0=Bipart, 1=Latch 2=Trap, 3=Tandem
04	Warn When	1	0	0 = Moving, 1 = Closing, 2 = Not Closed, 3= Alerts Only
05	Warn Time Before Moving	2	0	0 – 30 Seconds
06	Anti-Tailgate Enable (ATG)	1	0	0 = Disabled, 1 = Enabled
07	Latch Delay Time	3	6	0 – 250 Seconds (.4 sec. Increments)
08	Reclose Time (RT)	Up to 3	30	0 – 250 Seconds (0 = Disabled)
09	Maximum Retry Count	1	0	0 – 2 (0 = Do not retry)
10	Retry Pause Time	Up to 2	30	30-99 Seconds
11	Reverse Sense Backup Closing	Up to 3	3	0 – 499 inches
12	Reverse Sense Backup Opening	Up to 3	3	0 – 499 inches
13	Interrupt Bar Backup If Closing	Up to 3	12	0 – 499 inches
14	Interrupt Bar Backup If Opening	Up to 3	0	0 – 499 inches
15	Return to Factory Set Defaults	6	N/A	101010 (partial), 191919 (full)

M. POST INSTALLATION PROCEDURES

1. Setup

1. Turn on the **main power** at the gate operator's circuit breaker.
2. Verify that **switch S1** (the Gate Open Direction switch) is set to the correct position.
3. Turn on the **unit power** switch.
   Master/Slave Systems: Turn on slave, then master.

2. Manual Inputs

1. Verify that Manual Open fully opens the gate and that the open limit switch stops the gate.
2. Verify that Manual Close fully closes the gate and that the close limit switch stops the gate.
3. Verify that Manual Stop stops the gate.

Note: If the gate stops due to a Reverse Fault, readjust the gate sensitivity pot.

3. Mechanical

Use the Manual Input commands to verify that:

1. The gate rolls open and closed smoothly.
2. There is no squeak or vibration in the gate when it is moving.
3. There is no belt slippage when the gate moves or stops.
4. There is no slack in the closed gate due to loose chain or parts.
5. **Master/Slave System:** Both gates open and close at the same time (Bi-Parting gates only).

4. Gate Sensitivity

1. <u>Left/Right Reverse sensitivity</u>:
   Apply a bump to the opening and closing gate and verify that the gate stops or reverses.
2. <u>Inrush (Gate response time)</u>:
   Apply a bump to the gate as it initiates opening and closing and verify that the gate responds to the bump within a second.

5. Maximum Retry Count

1. If you want the gate to resume operation automatically once or twice after a Fault (with a programmable delay of 30-99 seconds), enter 1 or 2 in programming step 09.
2. If you do not want the gate to resume automatically after a Fault, enter 0.
3. Give the opening gate a quick bump to generate a fault and verify retry operation.

NOTE: Programming steps 10 through 14 allow further gate control after a fault.

6. Entry inputs

1. Activate the CYCLE input (entry system), RADIO input (radio transmitter), and EXIT Loop input (driving over the exit loop) to verify that they fully open the gate. If Reclose Timer is enabled, it will close the gate.
2. Activate the FIRE input (fire department switch) and verify that the gate fully opens and then closes immediately. If Reclose Timer is enabled, it will close the gate.

7. Alternate Action

1. If you want the CYCLE input (Entry system) or RADIO input (Transmitter) to both open and close the gate, disable ATG and RT in programming steps 06 and 08.
2. Activate the CYCLE command, wait until the gate is fully open, then activate the CYCLE command again. The gate should close, verifying Alternate Action operation.

Note: If you select Alternate Action, you cannot enable RT and ATG in procedures 8 and 9 below.

8. Reclose Timer (RT)

1. If you want a fully open gate to automatically close after a period of time, enable RT in programming step 08.
2. If you don't want the gate to close automatically, disable RT.
3. Activate any entry command (except Manual OPEN) to open the gate and verify the Reclose Timer operation.

NOTE: Reclose Timer is not functional when the Manual Open command is used.

9. Inside Interrupt Loop and Anti-Tailgating (ATG) When Exiting

1. If you want the gate to <u>stop</u> when a vehicle drives onto the Interrupt Loop and to <u>restart</u> when the vehicle drives off the Interrupt Loop, enter 1 in programming step 01 and disable ATG in step 06.
2. If you want the gate to <u>continue opening</u> when a vehicle drives onto the Interrupt Loop and to <u>close</u> when the vehicle drives off the Interrupt Loop, enter 0 in programming step 01 and enable ATG in step 06.
3. If you want a closing gate to <u>open</u> when a vehicle drives onto the Interrupt Loop, enter 0 in programming step 01 and disable ATG in step 06.
4. If you want a closing gate to <u>stop</u> when a vehicle drives on the Interrupt Loop and an opening or closing gate to <u>close</u> when the vehicle drives off the Interrupt Loop, enter 01 in programming step 1 and enable ATG in step 06.
5. Activate the CYCLE command, drive over the Interrupt Loop, and verify its operation.

10. Interrupt Bar

While the gate is opening, push on the Interrupt Bar. The gate should stop or back up.

11. Maglock

Verify that the maglock activates when the gate is fully closed.

12. Power Fail Option

1. Verify that switch S2 (Power Fail Open Direction switch) is set to the desired position (Figure 12).
2. Record switch S2 setting in the space provided in the Maintenance Section.
   It is essential that maintenance personnel know what the gate will do when power is turned off during maintenance.

N. FINAL ASSEMBLY OF GATE OPERATOR

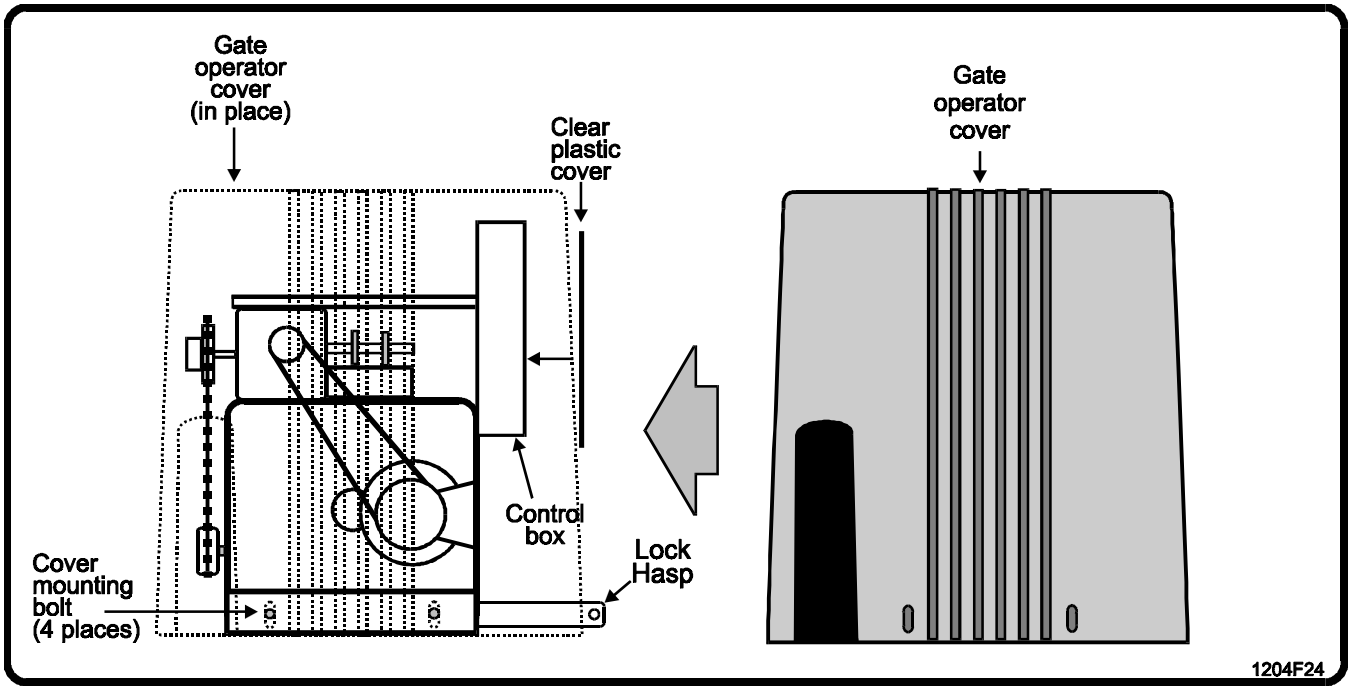

Figure 17. Gate Operator Final Assembly.

IMPORTANT SAFETY PROCEDURE
⇛ If switch S2 (Power Fail Open Direction switch) is set to OPEN the gate, *cycle the gate to its fully open position* before performing step 1.
⇛ If switch S2 (Power Fail Open Direction switch) is set to CLOSE the gate, *cycle the gate to its fully closed position* before performing step 1.
1. **Turn off power to the gate operation *at the circuit breaker* and wait for one minute.**
2. Install clear cover on gate operator control box.
3. **Make sure that gate operator unit power switch is turned on.**
4. Install gate operator cover and secure with four bolts.
5. Turn on power to the gate operator at the circuit breaker.
6. Cycle the gate to ensure it is operating properly.

PART 3
MODEL SL 1000-X1 OPTIONS

A. POWER FAIL OPERATION OPTION

The LiftMaster Power Fail Operation Option may be ordered pre-installed in new units, or can be purchased separately for installation in LiftMaster gate operator systems in the field. The Power Fail kit includes a DC motor, belt, battery, battery support bracket assembly (includes bracket, 3 control relays, rectifier and wire harness) and mounting hardware. Features of the Power Fail Option are as follows:

- The Power Fail Operation system fully opens or closes the gate (User's choice) one minute after a power outage. The gate will remain open or closed until AC power is restored.
- When AC power is restored, the battery is charged up to its full potential, then continuously trickle charged. Recharging takes from one to five hours, depending on the weight of the gate and how far it moved during the outage. The age of the battery also increases the battery charging time.

  NOTE: Battery capacity decreases over time. Battery should be replaced every two or three years.
- The charging section and controls for the Power Fail Operation are located on the control board.
- The motor sensing potentiometers (Right reverse, Left reverse and Inrush) on the Gate Operator board may require readjustment if the Power Fail Operation option is installed in the field.
- Gate speed may be slightly reduced with the Power Fail Operation option installed.

IMPORTANT NOTE
During a power outage, all Gate operator safety features are disabled and only the limit switches stop movement of the gate.

B. LIFTMASTER LOOP DETECTOR BOARDS

The model SL 1000-X1 has connectors for four LiftMaster-supplied loop detector add-on boards. These boards interface with Interrupt, Shadow and Exit loop sensors, which simply plug into the control board. The add-on boards can be ordered pre-installed, or can be installed in existing model SL 1000-X1 units.

PART 4
TROUBLESHOOTING AND MAINTENENACE

A. TROUBLESHOOTING

This section is designed to help you troubleshoot your unit(s) with a minimum of effort. Directly below are some hints to help you test, then a list of problems in order of most severe to least. Next comes a quick-reference list of faults and how to clear them, and then a list of faults and their causes.

Testing Control Board inputs: To test an input, connect the input terminal to the COMMON terminal on the Control Board and verify that its LED turns on momentarily. Normally, the Close limit switch and Maglock LED's are on if the gate is fully closed, and the Open limit switch is on if the gate is fully open. The Manual Stop LED is always on.

Low input AC voltage: The voltage across connector J3 pins 1 (red wire) and 3 (white wire) on the Control Board must measure 100 VAC to 130 VAC.

CAUTION HIGH VOLTAGE. Measure with care.

Fault Causes: Refer to the end of the troubleshooting section.

1. OPERATOR IS DEAD

When the unit power switch is turned on, the 7-segment display does not sequentially spell out "HELLO".

1. The main circuit breaker is off.
2. The unit power switch is off.
3. The input power connector is not connected securely to the Control Board.
4. Low input AC voltage.
5. Bad Control Board.

2. OPERATOR DOES NOT RUN

When the unit power switch is turned on, the 7-segment display sequentially spells out "HELLO".

1. An input is continuously activated (stuck).
2. Both limit switches are stuck closed.
3. The Manual STOP is disconnected from its common.
4. Stalled motor.

3. MOTOR DOES NOT RUN

Motor is dead:

1. The resettable motor thermal overload switch has popped.
2. The interconnecting cable between the motor and the Control board is disconnected.
3. Bad control board.
4. Bad motor.

Motor is stalled

1. Frozen motor, gearbox or gate.
2. V-belt is too tight.

4. THE CONTROL BOARD RESETS RIGHT AFTER GATE STARTS MOVING

1. Low AC voltage.
2. Inadequate and undersized power wiring between the main circuit breaker and the gate operator.

5. GATE STOPS IMMEDIATELY AFTER IT STARTS

1. A Fault has occurred

Mostly in cold weather or mornings:

2. A Fault has occurred; Inrush pot adjustment is set too low.

Power Fail Option was installed recently:

3. Gate sensitivity adjustments were not reset after installation of the Power Fail Option.
4. A Fault has occurred.

6. GATE STOPS A FEW SECONDS AFTER IT STARTS

1. Stuck limit switch.
2. A Fault has occurred.

7. GATE STOPS OR REVERSES WHILE MOVING

A Fault has occurred.

8. OPENING GATE STOPS WHEN A VEHICLE APPROACHES THE GATE

Gate Type is set to Swing, causing the Interrupt loop to stop the gate.

9. GATE OPENS BUT DOES NOT CLOSE

1. Reclose Timer is disabled.
2. One of the inputs is continuously activated (a stuck input).
3. Entry system is connected to the Manual Input by mistake.

10. GATE DOESN’T STOP AT THE LIMIT

1. Limit cams are out of adjustments.
2. Limit switch cable is disconnected either from the control board or the limit switches.
3. Bad limit switch or limit cam or limit switch bracket.

11. GATE IS TOO SLOW

1. Low input AC voltage
2. Hardened or frozen gate wheels.
3. Slipping belt.

12. GATE DOESN’T STAY OPEN/CLOSED WITH MANUAL/FIRE INPUTS

Manual inputs or Fire were only activated momentarily not continuously.

13. GATE DOES NOT CLOSE AUTOMATICALLY

1. Reclose timer setting is disabled.
2. The entry system is connected to Manual OPEN by mistake.
3. An input is continuously activated (stuck).

14. OPERATOR DOESN'T RESPOND TO COMMANDS FOR A MINUTE

A Fault has occurred and Max Retry count (programming step 9) is set to 0.

15. ALTERNATE ACTION DOES NOT WORK

1. ATG and Reclose Timer are enabled.
2. Entry system is connected to the Manual Input by mistake.

16. GATE DOES NOT OPEN IN THE CORRECT DIRECTION

The power was not cycled after changing the setting of switch S1.

17. AN OPEN GATE DOES NOT CLOSE AT POWER UP

1. An input is continuously activated (stuck).
2. The gate was not on the open limit switch when the power went out.
3. Reclose Timer is disabled.

18. GATE DOES NOT MOVE AFTER POWER OUTAGE

1. Bad Power Fail Option battery.
2. Miswired DC motor inputs.
3. Bad connection between the Power Fail Option harness connector and the Control Board.
4. Power Fail Option Open direction (switch S2) is not set to the correct position.
5. Battery is connected backwards, causing resettable fuse on the control board to open.

19. POWER FAIL OPTION WORKS, BUT GATE DOESN'T STOP AT LIMIT

1. Miswired DC motor inputs.
2. Bad Power Fail Option harness.

20. BATTERY DOESN'T RECHARGE WITHIN 4 TO 5 HOURS AFTER USE.

1. Old or bad battery.
2. Bad harness.
3. Bad Control board.

21. POWER FAIL OPTION MOVES THE GATE TOO SLOWLY

1. Old or not fully charged battery.
2. Hardened or frozen gate wheels.
3. Slipping belt.
4. Belt is too tight.

22. THERE IS SLACK IN THE GATE

1. Chain is too loose.
2. The hardware interconnecting the operator to the gate is not tight.
3. Set screws on the sprocket are not tight.

23. ATG (ANTI-TAILGATE) DOES NOT WORK

1. ATG is disabled.
2. Entry system is connected to Manual Open by mistake.
3. Interrupt loop or loop detector is not working properly.

24. INTERRUPT LOOP DOES NOT ACT PROPERLY

1. Improper gate type setting (programming step 01).
2. Bad loop sensor or loop detector.
3. Bad connection between the loop sensor, loop detector and the Control Board.

25. MAGLOCK DOES NOT WORK

1. Bad connection between Maglock, its power supply and the Control Board.
2. Bad Control Board (relay on the Control Board does not close).
3. Bad Maglock or Maglock power supply.
4. Large gap between gates.

26. MASTER/SLAVE SYSTEM

Units are not synchronized:

Improper Operator Pair setting (programming step 03).

One gate braking to stop causes fault in the other (moving) gate:

1. Both units are wired to the same circuit breaker.
2. Undersized power wires.

B. FAULT LIST

The following conditions can cause a fault in the SL 1000-X1 gate operator system:

1. **Interrupt Bar activation.**
2. **Average motor overcurrent** (overload) caused by excessive motor current.
3. **Instantaneous motor overcurrent** (left/right reverse sense) due to an impact on the gate.
4. **Maximum motor run time** exceeding 75 seconds.
5. **Inoperative motor** caused by an open motor winding, broken or unconnected input motor wires, or thermal overload.
6. **Limit switch staying closed when gate is supposed to move,** caused by a broken V-belt, defective limit switch, or defective cams.

Faults 1, 2 and 3 may be cleared at any time by the following, *if Max Retry Count is set to 1 or 2:*

- All open commands (Cycle, Radio, Exit, Fire)
- Manual commands (Open, Close, Stop)
    - Inside Interrupt Loop (ATG is enabled)

Faults 1, 2 and 3 may be cleared at any time by the following, *if Max Retry Count is set to 0:*

- Fire command
- Manual commands (Open, Close, Stop)
    - All other commands must wait 60 seconds to clear these faults.

Faults 4, 5 and 6 may be cleared at any time by the following:

- All open commands (Cycle, Radio, Exit, Fire)
- Manual commands (Open, Close, Stop)
    - Inside Interrupt Loop (ATG is enabled)

C. FAULTS AND THEIR CAUSES

1. IF FAULT AND OVERLOAD LEDS ARE TURNED ON

1. Bad Control board.
2. Bad motor.

2. IF FAULT AND REVERSE LEDS ARE TURNED ON

1. REVERSE or INRUSH adjustment is set too low.
2. The gate is blocked by an object.
3. Cold weather: frozen motor or frozen gate wheels.
4. The Maglock does not disengage from the gate at the start of gate opening.
5. Power Fail option was installed without readjusting the gate sensitivity adjustments.
6. A sudden increase in input power.
7. Bad Control board.
8. Belt is too tight.

3. IF MAX RUN TIME LED IS TURNED ON ONLY

1. Limit cams do not engage the limit switches.
2. The belt or chain has been broken.
3. The belt slips during gate movement.
4. Limit switch cable is disconnected.
5. Bad limit switch.
6. Stalled motor.

4. IF OPEN MTR LED IS TURNED ON ONLY

1. The motor thermal overload switch is popped.
2. The wires connecting the motor to the Control Board are disconnected.
3. Bad motor.

5. IF FAULT LED IS TURNED ON ONLY

1. A limit switch is stuck closed.
2. The belt was broken before the start of the gate movement.
3. Interrupt Bar switch is activated.
4. Stalled motor at open or close limit.

D. MAINTENANCE

WARNING
To avoid injury, always turn off the unit power switch before working on gate.

Regular performance of preventive maintenance is essential for reliable system operation because it corrects small problems before they turn into emergencies. LiftMaster recommends performing preventive maintenance every 6 to 12 months, depending upon the amount of gate usage.

- If the gate is installed in a private residence or small apartment house where usage is not severe, yearly preventive maintenance is acceptable.
- If the gate is installed in a high-traffic application, semi-annual preventive maintenance is essential.

PREVENTIVE MAINTENANCE TASKS

1. **Gate:** must roll freely without any impediment. Check wheels, grease if necessary.
2. **Chain:** Check for wear and tension. If loose, adjust chain tension. Do not oil chain.
3. **Sprocket:** must not be loose on the shaft. Tighten set screws if loose ❶.
4. **Idlers:** Check for wear. Tighten bolts if loose. Do not oil idler assembly.
5. **Limit switches:** contacts must bounce back rapidly when they are pressed and release. Cam lock plate (see Figure 14) must firmly hold the cams. Do not oil gearbox shaft.
6. **Belt:** Check for wear and tension (25 to 30 lbs.). Adjust the AC motor up or down to set proper tension.
7. **Pulleys:** must all line up and be firmly secured to their shafts. Tighten set screws if loose ❶.
8. **Gear Box:** Check for no oil leakage around the bushings. Do not oil gearbox.
9. **Control board:** Check for water damage or burned spots. All connectors secured to the board.
10. **Wiring:** Check all wiring for any insulation damage. Check for loose wire connections.
11. **No Rust:** Check for rust throughout the unit. Check corners for water entrapment.
12. **Fire Open:** Activate Fire department switch to verify emergency gate opening.
13. **Gate Sense:** Check for the gate sensitivity (refer to Part 2, System Installation, Section I, Gate Sensitivity Adjustments).
14. **Power Fail Option (PFO):** Check for proper operation (refer to Part 2, System Installation, Section J, Power Fail Option Connection, Paragraph b, Power Fail Option Operation Test).

NOTES:

❶: To prevent loosening, LOCTITE threadlocker 242 is applied to set screws.

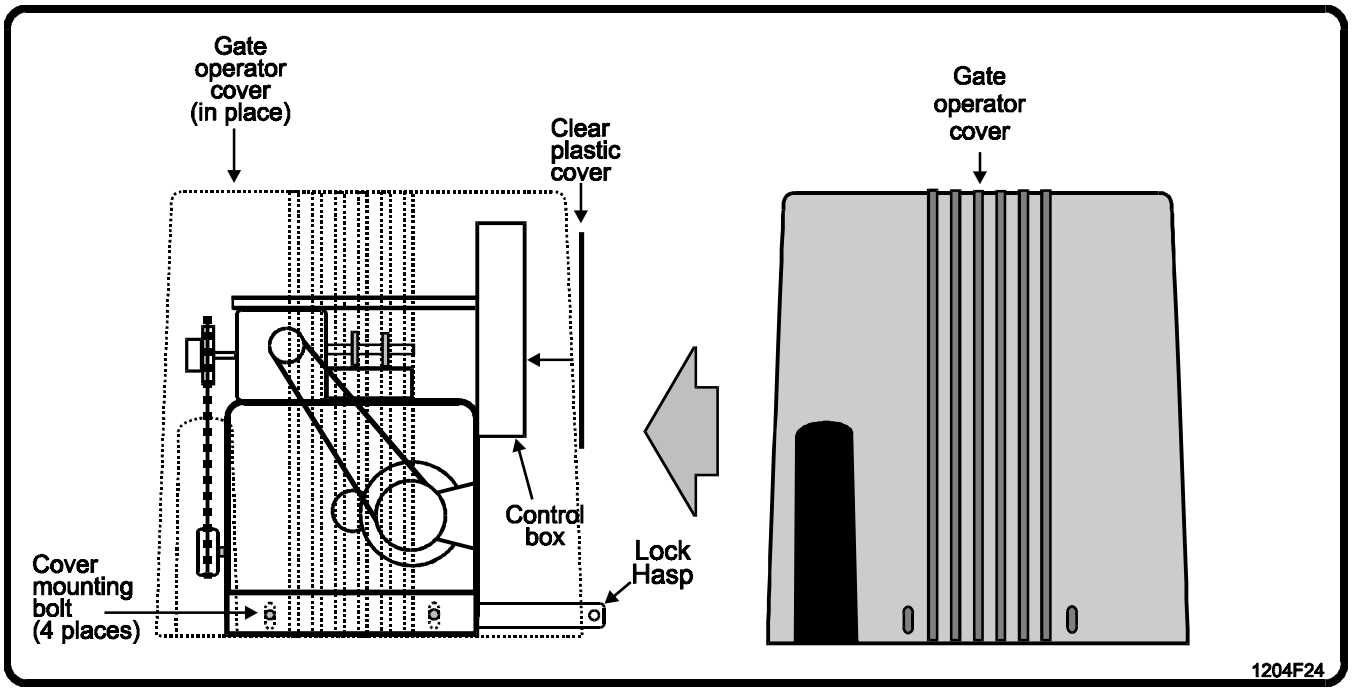

Figure 18. Gate Operator Disassembly and Assembly.

Gate Operator Serial Number: _____	**Power Fail Option: Yes**	**No**
One minute after a power outage the Power Fail Option:	**Opens Gate**	**Closes Gate**

⇒ If switch S2 (Power Fail Open Direction switch) is set to open the gate, cycle the gate to its fully open position before performing step 1.

⇒ If switch S2 (Power Fail Open Direction switch) is set to close the gate, cycle the gate to its fully closed position before performing step 1.

♦ Refer to Figure 18, above, to perform the following instructions.

1. **Turn off power to the gate operator *at the circuit breaker* and wait one minute.**
2. Remove the cover mounting bolts and remove the gate operator cover.
3. Push the gate to ensure it rolls freely (grease if necessary). Check (✔) its box in the Maintenance Schedule.
4. Inspect drive train (sprockets, chain, etc.) for wear and hardware tightness. Check (✔) its box in the Maintenance Schedule.
5. Perform preventive maintenance tasks 3 to 14.
6. After completing all checks, perform the procedure found in Part 2, System Installation, Section M, Final Assembly of Gate Operator.

The following table is provided to help you keep a record of the maintenance schedule. Write the inspection date in the left-hand box and check (✔) the boxes across as you perform your maintenance procedures.

MAINTENANCE SCHEDULE TABLE

Date	Gate	Chain	Sprocket	Idler Assy	Limit Switches	Belt	Pulleys	Gear box	Control Board	Wiring	No Rust	Fire Open	Gate Sense	PFO

APPENDIX A
SYSTEM OPERATION REFERENCE

CONTROLS, INDICATORS, INPUTS AND ADJUSTMENTS

For control and indicator locations, refer to the figure below. For detailed explanations of the Gate Operator's various controls, indicators inputs and adjustments, refer to the pages that follow. For setting instructions, refer to the manual entitled Programming Instructions For The LiftMaster SL 1000-X1 and SW 2000-X1 Gate Operators, (Doc. No. 6001193).

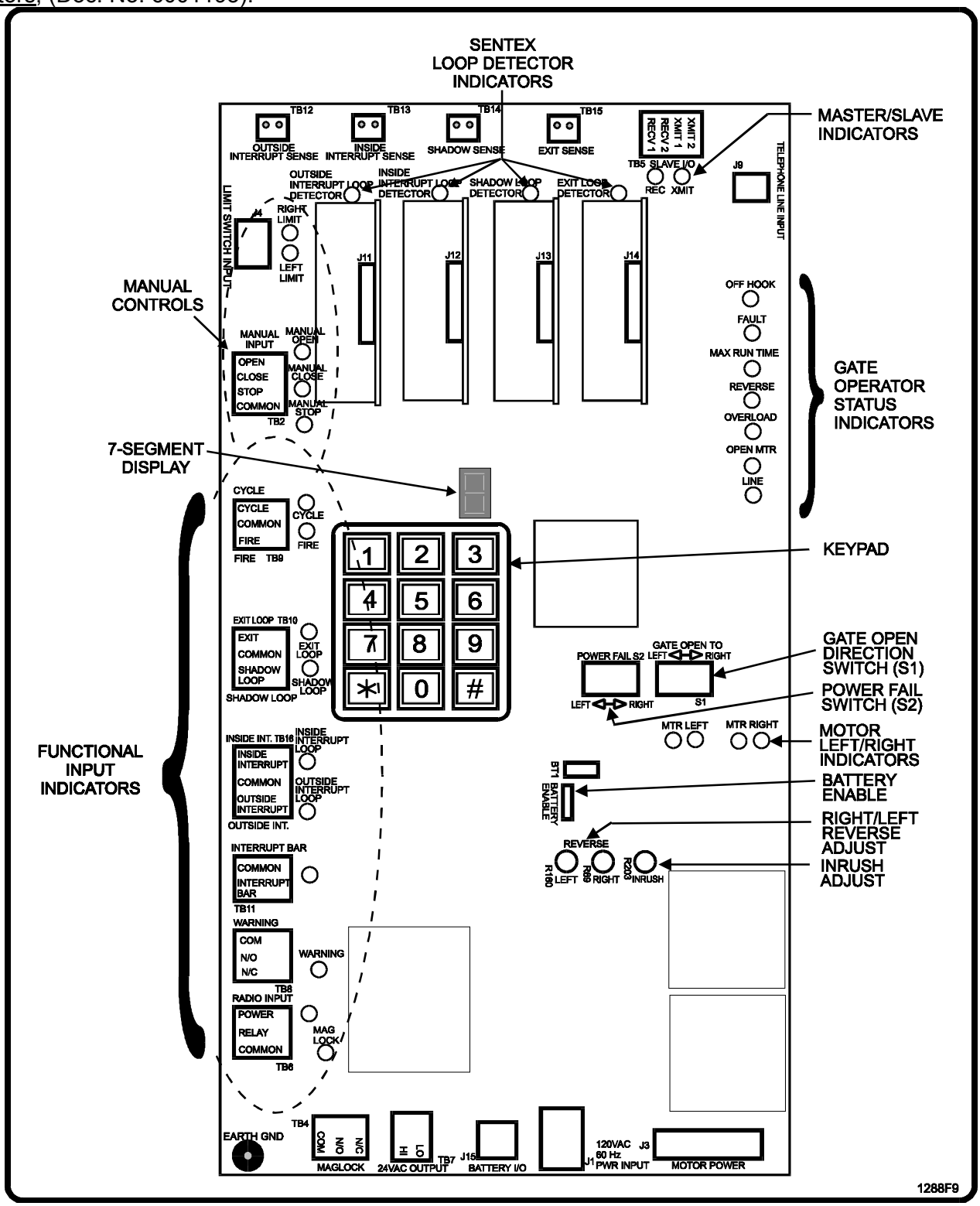

Figure A-1. Control Board.

CONTROLS

KEYPAD The 12-key keypad is used for local operation, programming and service.

SWITCH S1

GATE OPEN TO LEFT/RIGHT	Selects the direction the gate will open for typical installation (Left) and restricted installation (Right).

SWITCH S2

POWER FAIL LEFT/RIGHT	Selects the direction the Power Fail Operation option will move the gate (LEFT/RIGHT) if AC power fails.

INDICATORS

LED indicators light when controls and inputs are active. Additional indicators are as follows:

DISPLAY	This is a seven segment character display that gives numerical response to service personnel during programming and operation.
LEFT LIMIT	Indicates that the LEFT limit switch is activated.
RIGHT LIMIT	Indicates that the RIGHT limit switch is activated.
MTR LEFT	Indicates that the gate is moving counterclockwise.
MTR RIGHT	Indicates that the gate is moving clockwise.
XMIT	Indicates data is being sent to the other unit in a Master/Slave system.
RECV	Indicates data is being received from the other unit in a Master/Slave system.
LINE	Indicates the ring detect for an incoming telephone call and if the phone line is available when the gate operator wants to initiate a call.
OFF HOOK	Indicates the gate operator is off hook and using the phone line.
FAULT	Indicates a fault in the system. See Fault List in Part 4, Troubleshooting and Maintenance.
MAX RUN TIME	Indicates the motor ran for more than 75 seconds without reaching a limit switch, and was stopped. Usually requires mechanical service. See Fault List in Part 4, Troubleshooting and Maintenance.
REVERSE	Indicates the peak motor current threshold was reached. See Fault List in Part 4 Troubleshooting and Maintenance.
OVERLOAD	Indicates that the average motor current threshold was reached. See Fault List in Part 4, Troubleshooting and Maintenance.
OPEN MTR	Indicates the motor is engaged, but is not drawing any current. The thermal overload switch on the motor may need to be reset. See Fault List in Part 4, Troubleshooting and Maintenance.

FUNCTIONAL INPUTS

NOTES:

❶ The term “activation” means closing an input circuit (via a relay or switch), and may be momentary or continuous. Momentary activations are superseded by any command. Continuous activations are superseded only by an overriding command.

❷ Activating any command when gate is at the open limit stops the Reclose Timer. When any command (except Manual Close and Stop) clears, the Reclose Timer is reset.

MANUAL INPUTS: OPEN, CLOSE, AND STOP (TB2)

MAN OPEN	Activation fully opens the gate. **Continuous activation holds gate open.** Man Open overrides Anti-Tailgate (ATG), Reclose Timer, and all controls but Man Stop.

MAN CLOSE — Activation fully closes the gate. **Continuous activation holds gate closed.** Man Close overrides all controls but Man Stop, Man Open and Fire.

MAN STOP — **De-activation** stops opening and closing gates. Man Stop overrides Reclose Timer and all other controls, manual or automatic. **If Man Stop is disconnected from its COMMON, no commands affect the gate.**

ENTRY SYSTEM/FIRE SWITCH INPUTS (TB9)

CYCLE — Reclose Timer Disabled:

Activation opens the gate, **which remains open until another command is received.** A Cycle command when the gate is fully open closes the gate. This Alternate action allows a single command to both open and close the gate. Cycle also opens a closing gate. If Anti-Tailgating (ATG) is enabled, Alternate Action is disabled. With ATG enabled, the gate begins closing as soon as the Inside Interrupt Loop clears.

Reclose Timer Enabled:

Activation opens the gate, **then the Reclose Timer closes the gate.** A Cycle command also opens a closing gate, but will not close a fully open gate if the Reclose Timer is enabled. If Anti-Tailgating (ATG) is enabled, the gate closes as soon as the Inside Interrupt Loop clears.

FIRE — Activation opens the gate. **Continuous activation holds the gate open.** If Reclose Timer is disabled, when Fire is deactivated, gate closes immediately. If Reclose Timer is enabled, when Fire is deactivated, the Reclose Timer starts. FIRE overrides all commands but Manual Stop.

EXIT LOOP/SHADOW LOOP DETECTOR INPUTS (TB10)

EXIT LOOP — Same as Cycle, but does not close the gate when it is fully open.

SHADOW LOOP — Activation prevents the gate from opening or closing so the gate won't hit a vehicle. If the gate is already moving, or if the gate is not fully opened or closed, this input has no effect (swing gate only).

INSIDE/OUTSIDE INTERRUPT LOOP DETECTOR (TB16)

INSIDE INTERRUPT LOOP — with Gate Type = Swing and ATG enabled

Gate fully open or closed: activation prevents the gate from moving. When the Interrupt Loop clears, the gate begins closing.
Gate opening or closing: activation halts the gate. When the Interrupt Loop clears, an opening gate closes and a closing gate resumes its course.

INSIDE INTERRUPT LOOP — with Gate Type = Swing and ATG disabled

Gate fully open or closed: activation prevents the gate from moving.
Gate opening or closing: activation halts the gate. When the Interrupt Loop clears, the gate resumes its course.

INSIDE INTERRUPT LOOP — with Gate Type = Slide or Barrier and ATG enabled

Gate fully open or closed: activation prevents the gate from closing. When the Interrupt Loop clears, the gate begins closing.
Gate opening or closing: activation halts a closing gate. When the Interrupt Loop clears, an opening gate closes and a closing gate resumes its course.

INSIDE INTERRUPT LOOP — with Gate Type = Slide or Barrier and ATG disabled

Gate fully open or closed: activation prevents the gate from closing only.
Gate opening or closing: activation fully opens a closing gate and starts the Reclose Timer if timer is enabled.

OUTSIDE
INTERRUPT LOOP with ATG disabled

Gate fully open or closed: activation prevents the gate from closing only.
Gate opening or closing: activation fully opens a closing gate and starts the Reclose Timer if timer is enabled.

OUTSIDE
INTERRUPT LOOP with ATG enabled

Gate fully open or closed: activation prevents the gate from closing only.
Gate opening or closing: activation prevents the gate from closing. When the interrupt loop clears, the gate begins closing.

NOTES:

- If Gate Type = Slide, gate brakes whenever it stops.
- If Gate Type = Swing, gate brakes only at open or close limit.
- If Gate Type = Barrier, gate never brakes.

INTERRUPT BAR INPUTS (TB11)

INTERRUPT BAR Activation causes the gate to reverse for a programmable distance and stop. If Max Retry Count is enabled, gate waits a programmable pause time, then tries to resume. The gate will retry up to twice before faulting out.

WARNING (TB8)

WARNING OUT Relay contacts close depending on the programmed setting of the warning.

PHONE LINE (J9)

PHONE LINE Terminals connect the telephone line to the gate operator.

INS./OUTS. INT. SENSE / SHADOW SENSE / EXIT SENSE (TB12/TB13/TB14/TB15) INPUTS

INSIDE INTERRUPT SENSE Input from an Inside Interrupt loop provides the signal for an optional LiftMaster loop detector add-on board. Operation is the same as the Inside Interrupt Loop input, above.

OUTSIDE INTERRUPT SENSE Input from an Outside Interrupt Loop provides the signal for the optional LiftMaster loop detector add-on board. Operation is the same as the Outside Interrupt Loop input, above.

SHADOW SENSE Input from Shadow Loop provides signal for optional LiftMaster loop detector add-on board. Operation is the same as Shadow Loop input, above.

EXIT SENSE Input from Exit Loop provides signal for optional LiftMaster loop detector add-on board. Operation is the same as Exit Loop input, above.

RADIO INPUT (TB6)

RADIO RECV Convenience terminals provide power (24 VAC) and signal connection for a radio receiver. Activation is the same as Cycle.

MAGLOCK INPUT (TB4)

MAGLOCK **NO** and **COM** inputs can close a circuit (i.e., Maglock) when the Close Limit switch is activated (the gate is fully closed).
NC and **COM** inputs close a circuit (security camera, camcorder, light, etc.) when the Close Limit switch is deactivated (when gate is not fully closed).

24VAC OUTPUT (TB7)

Convenience terminals provide power (24VAC, 200mA) for peripheral devices.

SLAVE I/O INPUT (TB5)

SLAVE I/O	Input/output terminals are used to control a second gate operator in a Master/Slave system.

ADJUSTMENTS

REVERSE RIGHT (R69)	Adjustable pot controls gate sensitivity to blockages by the instantaneous rise in motor current. When the limit is exceeded, the gate reverses a programmed distance and stops. If Max Retry Count is enabled, the gate waits a programmed pause time, then tries to resume. The gate will retry twice before faulting out.
REVERSE LEFT (R160)	Adjustable pot controls gate sensitivity to blockages by the instantaneous rise in motor current. When the limit is exceeded, the gate reverses a programmed distance and stops. If Max Retry Count is enabled, the gate waits a programmed pause time, then tries to resume. The gate will retry twice before faulting out.
NOTE:	LiftMaster gate operators have two reverse sense adjustments (left and right) where other gate operators have only one. This allows greater flexibility of installation. For instance, you can install a gate on an incline and not worry about sacrificing downhill gate sensitivity.
INRUSH (R203)	Adjustable pot controls the delay in sensitivity to a Reverse Sense input. This delay in sensitivity prevents the initial motor inrush current from causing a fault condition. The weight of the gate determines this setting.

CONNECTORS

LIMIT SWITCH (J4)	Connector for the Left/right limit switch cable.
BATTERY I/O (J15)	Connector for use by the Power Fail Operation unit.
PWR INPUT (J1)	Connector for AC input power.
MOTOR POWER (J3)	Connector for the motor cable.
LOOP DETECTOR (J11)	Connector for optional LiftMaster Outside Interrupt Loop detector add-on board.
LOOP DETECTOR (J12)	Connector for optional LiftMaster Inside Interrupt Loop detector add-on board.
LOOP DETECTOR (J13)	Connector for optional LiftMaster Shadow Interrupt Loop detector add-on board.
LOOP DETECTOR (J14)	Connector for optional LiftMaster Exit Interrupt Loop detector add-on board.

APPENDIX B
SL 1000-X1 PARTS LIST

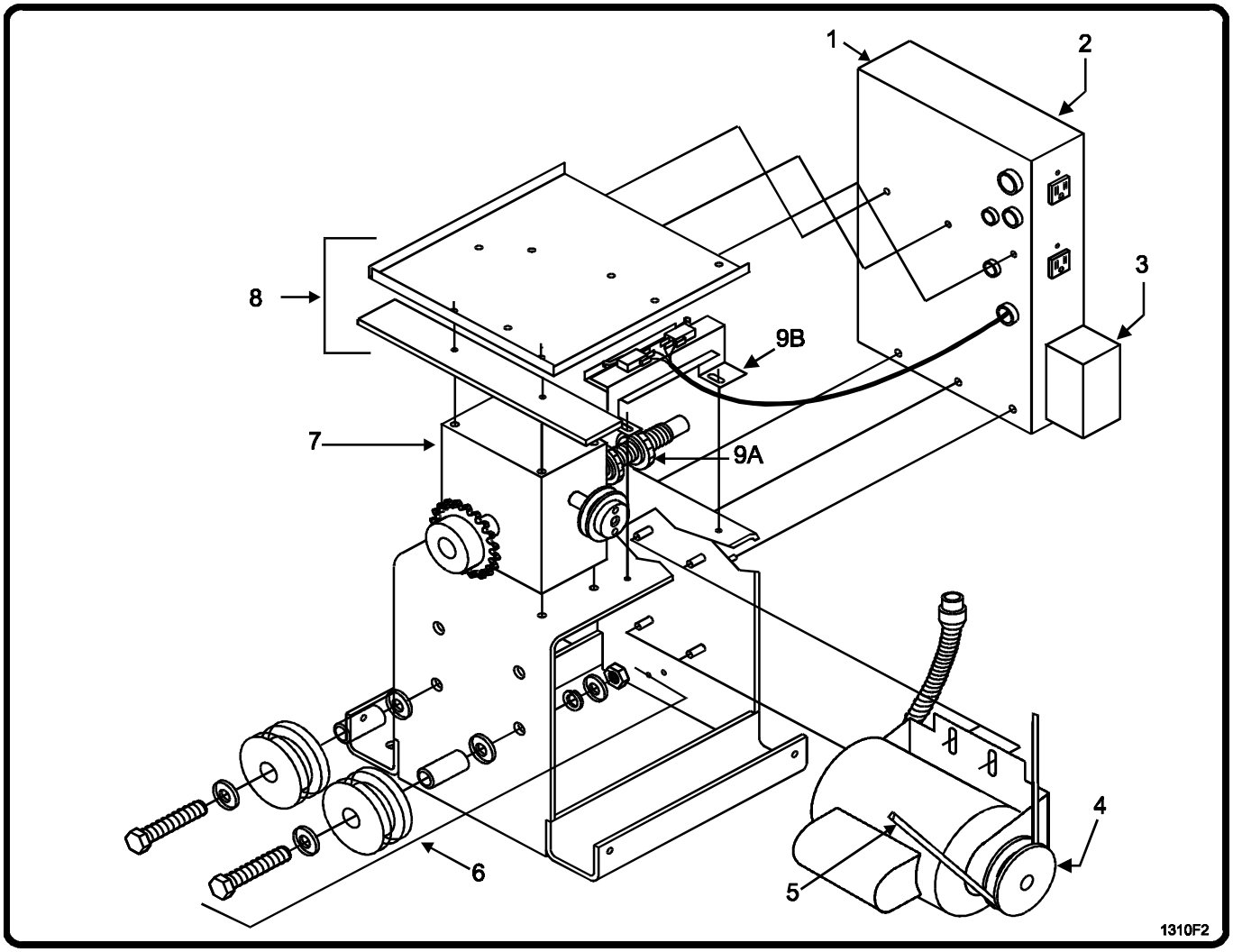

Figure C-1. SL 1000-X1 Parts List.

ITEM #	PART NAME	WHAT IT DOES
1	Control Box/Clear Cover	Contains control board, input connections
2	Control Board (not shown)	Controls gate operator functions
3	ON/OFF Switch	Main power switch, reset gate operator
4	AC Motor	Provides drives to gate operator
5	V-Belt	Connects motor to gearbox
6	Idler Assemblies	Maintains tension on drive chain
7	Gear box	Reduces motor speed to drive gate
8	Tray Assembly	Convenience tray holds optional equipment
9A/B	Limit Cams/Limit Switch Assy	Stops motor when gate reaches limit
10/11	Drive Chain/Cover (not shown)	Moves gate/Protects gate operator from elements

GLOSSARY

AC: Alternating Current. An electric current or voltage that reverses direction at regular intervals.

Alternate Action: Ability to open and close a fully open gate by using the same open command.

Arc: The area that is swept by a swing gate from fully closed to fully open position.

ATG: Anti-tailgating refers to a method of immediately closing an opening gate behind a vehicle so that an unauthorized vehicle can not follow the authorized vehicle through the gate.

DC: Direct Current. An electric current of constant value flowing in one direction only.

Dynamic braking: Stopping the gate by activating the forward and reverse windings of the gate operator motor in each half AC cycle.

Fault: An abnormal condition which causes the gate to stop to protect the gate and the user.

Gate sensitivity: The response of the gate operator to an exerting force to the gate.

Gear reducer: A device that changes the speed and power of its driving force (motor).

Inrush current: Initial current drawn into an electrical device due to its capacitive or inductive nature.

Interrupt Bar or Edge: A switch which is installed at the edge of a gate to protect an object which is situated between the gate and the gate frame.

LED: Light Emitting Diode. LEDs are indicators placed on the controller board which light up to indicate an action in the system.

Limit switch: A switch which its closure indicates the gate has reached its open or close limit, causing the gate to stop. There are two limit switches, open and close.

Limit cam: An object which its excursion corresponds to the gate traveling distance and closes the limit switch at the open or close limit of the gate.

Loop sensor: A wire embedded in the ground for magnetically sensing large metallic objects (cars).

- ✔ **Exit or Open Loop:** activation opens the gate.
- ✔ **Interrupt or Reverse or Reopen Loop:** activation reverses or stops the gate.
- ✔ **Shadow Loop:** activation prevents a fully open or closed gate from moving while a vehicle is inside the arc of a swing gate.

Loop detector: An electronic device that is activated by a loop sensor sensing a metallic object.

Master/Slave: A synchronized system containing a pair of gate operators.

Maglock: An electric magnet which is used to secure the closed gate.

Power Fail Option: A battery backup system which opens or closes the gate at power outage.

Pulley: A grooved wheel which transfers power via a belt.

Reclose Timer: An electronic timer which closes the fully open gate automatically.

Retry: A condition at which the stopped gate resumes its course automatically after the occurrence of a Fault.

RPM: Rotation Per Minute is a term to indicate the speed of an rotary object.

Sprocket: A toothed wheel which transfers power via a chain.

Thermal overload: A condition at which a heat producing device shuts off automatically when it reaches a critical and damaging temperature level.

Torque: A force that causes rotation.

NOTICE TO CANADIAN USERS

NOTICE: The Industry Canada label identifies certified equipment. This certification means that the equipment meets telecommunications network protective, operation and safety requirements as prescribed in the appropriate Terminal Equipment Technical Requirements document(s). The Department does not guarantee the equipment to the user's satisfaction.

Before installing this equipment, users should ensure that it is permissible to be connected to the facilities of the local telecommunications company. The equipment must also be installed using an acceptable method of connection. The customer should be aware that compliance with the above conditions may not prevent degradation of service in some situations.

Repairs to certified equipment should be coordinated by a representative designated by the supplier. Any repairs or alterations made by the user to this equipment, or equipment malfunctions, may give the telecommunications company cause to request the user to disconnect the equipment.

Users should ensure for their own protection that the electrical ground connections of the power utility, telephone lines and internal metallic water pipe system, if present, are connected together. This precaution may be particularly important in rural areas.

Caution: Users should not attempt to make such connections themselves, but should contact the appropriate electric inspection authority, or an electrician, as appropriate.
NOTICE: The **Ringer Equivalence Number** (REN) assigned to each terminal device provides an indication of the maximum number of terminals allowed to be connected to a telephone interface. The termination on any interface may consist of any combination of devices subject only to the requirement that the sum of the Ringer Equivalence Numbers of all the devices does not exceed 5.

COPYRIGHT© 2001
ALL RIGHTS RESERVED

This document is protected by copyright and may not be copied or adapted without the prior written consent of LiftMaster. This documentation contains information proprietary to LiftMaster and such information may not be distributed without the prior written consent of LiftMaster. The software and firmware included in the LiftMaster product as they relate to this documentation are also protected by copyright and contain information proprietary to LiftMaster.

FOR TECHNICAL SUPPORT

Call our toll free numbers:

(800) 323-2276
(800) 998-9197

Installation and service information is available six days a week.

TO ORDER REPAIR PARTS

Call our toll free numbers:

(800) 528-2806
(800) 998-9197

Prepare to provide the following information when ordering repair parts:

- **Part Number**
- **Part Name**
- **Model Number**