PTI SECURITY SYSTEMS

APEX Access Device
Installation and Operation Manual

SECURITY ACCESS CONTROL VIDEO

www.ptisecurity.com *800.331.6224*

114A3863 Rev F - July 2019

Intertek

Thank you for purchasing the APEX Keypad Access Device. While every effort has been made to ensure the accuracy of the information in this document, PTI Security Systems assumes no liability for any inaccuracies contained herein. We reserve the right to change the information contained herein at any time and without notice.

NOTE: This equipment has been tested and found to comply with the limits for a Class A digital device, pursuant to Part 15 of the FCC Rules. These limits are designed to provide reasonable protection against harmful interference in a residential installation. This equipment generates, uses, and can radiate radio frequency energy and, if not installed and used in accordance with the instructions, may cause harmful interference to radio communications. However, there is no guarantee that interference will not occur in a particular installation. If this equipment does cause harmful interference to radio or television reception, which can be determined by turning the equipment off and on, the user is encouraged to try to correct the interference by one or more of the following measures:

- Reorient or relocate the receiving antenna.
- Increase the separation between the equipment and receiver.
- Connect the equipment into an outlet on a circuit different from that to which the receiver is connected.
- Consult the dealer or an experienced radio TV technician for help.

This Class A digital apparatus complies with Canadian ICES-003.

Cet appareil numérique de la classe A est conforme à la norme NMB-003 du Canada.

© 2017 PTI Security Systems

All rights reserved. No part of this publication may be reproduced, transmitted, transcribed, or translated into any language in any form, by any means, without written permission of PTI Security Systems.

This equipment generates, uses, and can radiate radio frequency energy and if not installed and used in accordance with the instruction manual, may cause interference to radio communications. It has been tested and found to comply with the limits for a Class A computing device pursuant to Subpart J of Part 15 of FCC rules, which are designed to provide reasonable protection against such interference when operated in a commercial environment. Operation of this equipment in a residential area is likely to cause interference in which case the user, at his/her own expense, will be required to take whatever measures may be required to correct the interference.

With the RS485 communication scheme, a keypad can be located as far as 4000 feet from the controller, therefore shielded twisted pair cable with ground wire is required for optimal operation. Additionally, larger gauge wire must be used the farther the device is from the controller, Voltage drops across long lengths of wire must also be considered; refer to the *'Voltage Drop Calculation QuickDoc'* in our online knowledge base at www.ptisecurity.com/knowledge-base for more information.

Incorrect installation of electrical components can result in damage to electronics as well as personal injury.

Cross-wiring the AC power with the DC power will damage the electronics.

Cross-Wiring the Power wires with the Data wires will damage the electronics

Cross-wiring the positive and negative on the DC part of the system will damage the electronics.

Do NOT run low voltage system wires in the same conduit as high voltage wiring

The system will not operate properly if the voltage is below 12VDC. Extreme care should be taken when choosing a power supply voltage and current rating. Long distance runs may require a remote power supply to be installed in line with an RB5 relay to ensure proper operation.

Warning: The User should follow all installation, operation, and maintenance instructions. The User is strongly advised to conduct product and systems tests at least once each week. Changes in environmental conditions, electric or electronic disruptions and tampering may cause the product to not perform as expected.

PTI Security Systems warrants its Product to the User. The User is responsible for exercising all due prudence and taking necessary precautions for the safety and protection of lives and property wherever PTI Security Systems products are installed. PTI Security Systems does not authorize the use of its products in applications affecting life safety.

Contents

Technical Specifications 1

Installation 2
- Placing APEX Devices 2
- Mounting Access Devices 3
- Installing APEX Access Devices 9
- Installation Instructions 11
- Connecting Additional Features 16
- Testing the Keypad 23

Operation 25
- Input/Output Descriptions 25
- Using Extended Door Controls 30
- APEX Access Device Setup Function 32
- Standard Display Messages 41
- Access Codes and Cards 42
- Access Response Messages 46

System Maintenance 48
- Troubleshooting 50
- Test Power and Communication 51
- Test Individual Devices, Card and Code Input 55
- Test multiple devices or entire site 56

Warranty & Disclaimer 58

Technical Specifications

Input Power:

Voltage:	12 – 18 VAC or DC
Current Consumption:	300mA Maximum

Relay Specifications:

Maximum Switching Voltage:	30 VAC / 30VDC
Maximum Switching Current:	AC: 10A (NO) / 3A (NC) DC: 5A (NO) / 3 A (NC)

* Resistive load

Environmental:

Ambient Temperature:	-40°C to +85°C (-40°F to 185°F)
Ambient Humidity:	0 to 85% non-condensing

Installation

Placing APEX Devices

The APEX Access Device (APEX) controls entry to or exit from a secured area. It works in conjunction with a controller and control software. The APEX can be used to control gate access, building access, room access, elevator access, etc. and is designed for ease of use and flexibility. Both the keypad and the large LCD are backlit for easy visibility day and night. Mounting height for devices will vary with local code regarding handicap access, emergency and fire access, and other regulations.

Before installing the APEX determine where and how the device will be installed, since the mounting location is determined by how the device will be used. For drive up access, install the device where it can be reached from a vehicle's driver door. If the APEX is used for walk up access, install it where it can be accessed by a person on foot.

Drawing 1: *Drive up accessability*

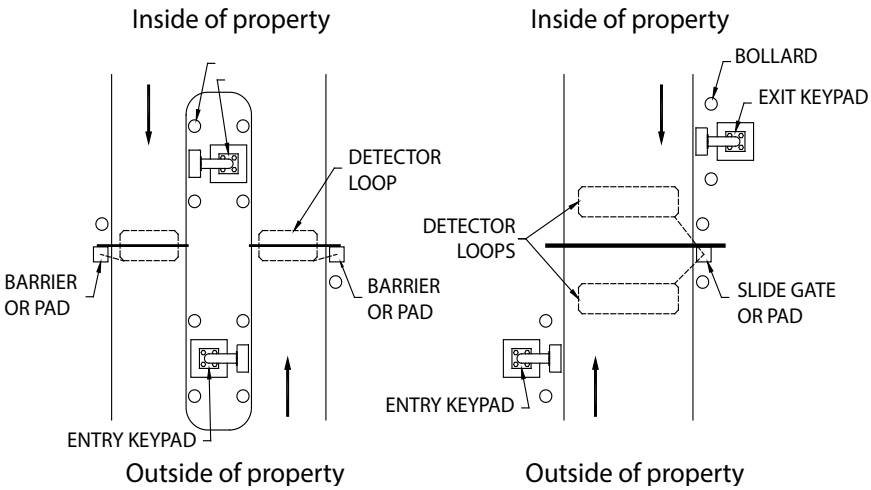

Drive Up Accessibility

When the APEX will be positioned for drive up accessibility, the device must be mounted within easy reach of the driver of an automobile or light truck. Most of these locations use gooseneck stands on an island between the entry and exit gates (or to the left side of the gate if a single gate is used). "Drawing 1: Drive up accessability" on page 2 shows different entry layouts.

Local building codes may set a minimum and maximum height for devices that are accessible by vehicle. shows suitable mounting locations when used for vehicle access.

Walk Up Accessibility

When the APEX is used for walk up access, it can be mounted on a stand or attached to a wall. It can also be surface mounted so that it protrudes from the wall.

Mounting Access Devices

The proper mounting height for the APEX varies with the application and it can be installed at an entrance on a gooseneck/bollard or attached to a wall.

Once the keypad location is determined, note , the location and purpose of the device on a site security wiring plan. Keep the plan in a safe location for future maintenance and service purposes.

Surface Mount

Surface mounted keypads are often used in conjunction with door strikes and elevators.

Mounting height is usually 48" – 58" from the floor to the center of the '5' button on the touchpad. However, the final location of the keypad may be affected by local building codes.

The choice of fasteners depends on the construction material of the wall.

Note: If the APEX is installed on an exterior wall, seal the contact point between the housing and the wall with a silicone sealant rated for outdoor use. This prevents moisture and insects from getting into the housing.

Flush Mount

A flush mount box allows the keypad to be set into hollow walls and is used in interior installations.

The flush mount box must be ordered separately. Mounting height is generally 48" – 58" from the finished floor to the center of the '5' button on the touchpad.

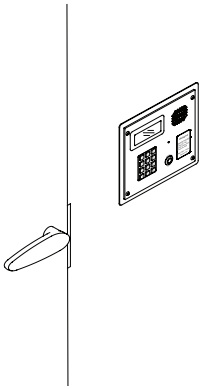

Drawing 2: Flush mount keypad

A gasket is needed for the face plate if the flush mount kit is used outdoors. Refer to "Drawing 3: Flush mount exploded view" on page 5 for the mounting details of the flush mount adapter.

The actual placement of the APEX device and its wiring methods may be affected by local building codes.

An elevator flush mount is available made of brushed stainless steel for mounting inside elevator cars; this model does not include an intercom.

Box Mount

A box mount with no shaded overhang is available for locations that require the keypad to be mounted lower than standard height, such as for handicap access. This box mount must be ordered separately.

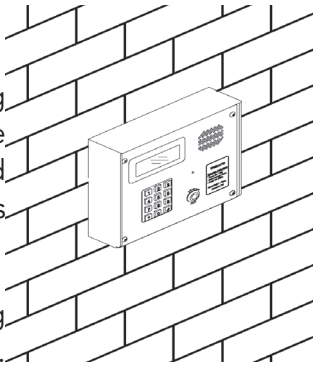

Drawing 4: Box mount for keypad

With a normal APEX mount, a standing person may not be able to see the display. Mounting height varies from 42″ – 58″ from the finished floor to the center of the '5' button on the touchpad.

Most standard keypad installations place the '5' button on the touchpad at approximately 50 inches from the finished floor for walk up keypads, and 45 inches from the finished driveway for standard vehicle access.

Drawing 3: Flush mount exploded view

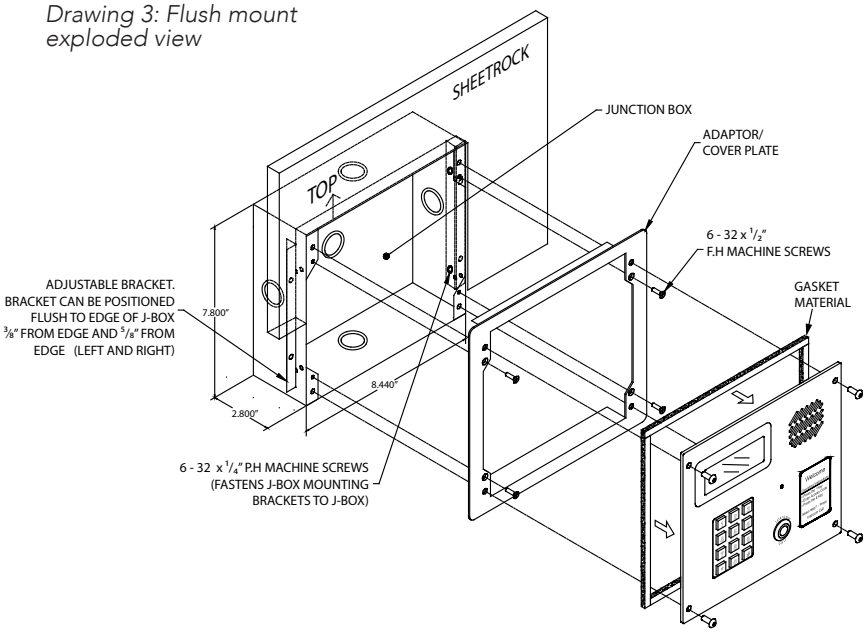

Gooseneck Stand Mount

A gooseneck is commonly used for driveways for vehicle access. The gooseneck can also be used near doors for wheelchair access or when sidewalks and landscaping require a freestanding keypad mount away from the building.

- The base plate of a gooseneck has a hole that accepts conduit (¾" maximum) for electrical wiring. Ensure the conduit is placed properly and the wiring runs through the conduit before mounting the gooseneck stand to the concrete base. The final location of the gooseneck and the mounting techniques may be affected by local building codes.

- As a precaution, the gooseneck should be protected with concrete bollards to prevent vehicles from damaging the electronics.

- There are several different styles of gooseneck stands available. See for the dimensions of two common styles in "Drawing 6: Gooseneck stand mount" on page 7.

Both single and double bollards are mounted on a Schedule 40 10 3/4" diameter pipe with a .365" wall. This pipe is footed in concrete and filled 3/4 of the way with concrete to create a solid barrier. The entire pipe and bollard are then painted to match the facility. Contact PTI Security Systems for full measured installation plans and instructions.

Wall Mount Gooseneck

A wall mount gooseneck allows the keypad to be mounted on a wall. It may be used for door strikes or for gates in driveways ajacent to a building wall, as shown in "Drawing 5: Wall mount Gooseneck" on page 6.

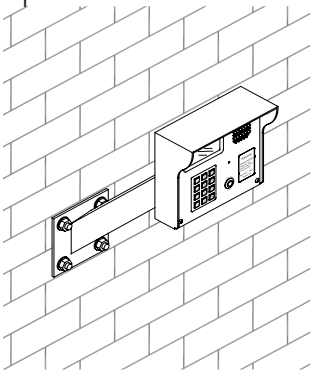

Drawing 5: Wall mount Gooseneck

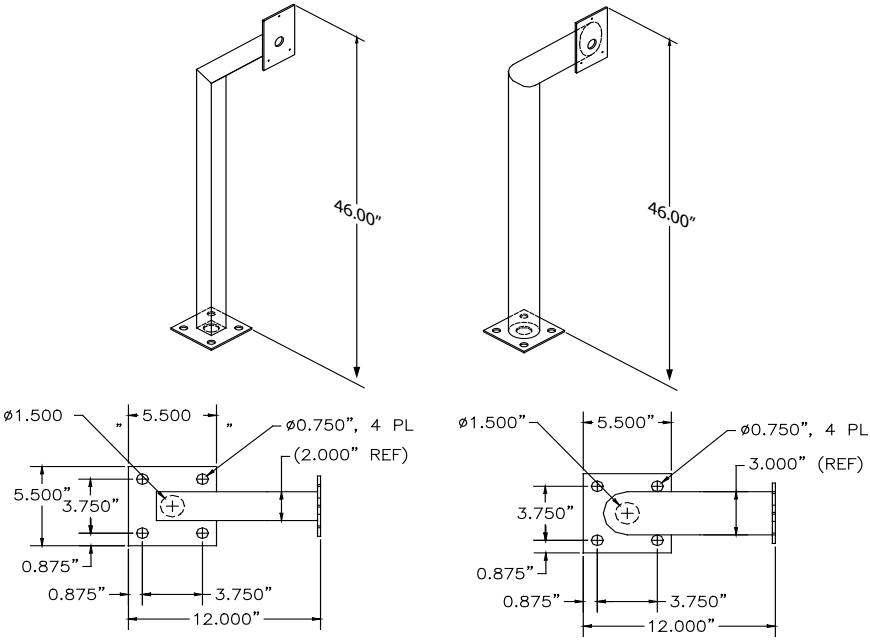

Drawing 6: Gooseneck stand mount

This gooseneck also gives wheelchair users access to a device. Mounting height is generally 48" – 58" from finished floor to the '5' button on the touchpad for walk-up access and 45 inches from driveway level to the '5' button on the touchpad for vehicular access.

If the APEX is installed on an exterior wall, seal the contact point between the housing and the wall with a silicone sealant rated for outdoor use. This prevents moisture and insects from getting into the housing.

Keypad Adapter Plate

- A keypad adapter plate is an aluminum plate used to mount keypads to stands, bollards, and goosenecks manufactured by other companies.

- The installer measures, marks, and drills holes in the adapter plate to match the stand configuration. To prevent tampering, ensure the holes are countersunk on the same side as the installed screws so that the keypad covers the mounting screws.

- The screws and screwholes provided on the aluminum plate match up with the APEX keyhole mounting pattern.

Single Bollard

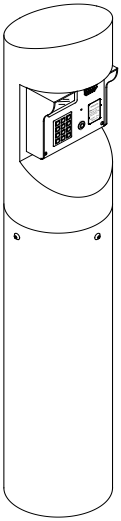

A bollard is an attractive and functional stand for keypads. It helps protect the keypad from vehicle damage. It can be used in driveways for vehicle access or near doors as a keypad stand. Height is determined by the length of the pipe on which it is mounted.

Bollards can be filled with concrete and used as barriers to protect keypads, walls, or gates.

Drawing 7: single bollard

Installing APEX Access Devices

Never install any other devices in the same wire run as the APEX.

Power and data-communication wiring are the most important wiring component for APEX devices. The APEX requires power and communication lines to be supplied from the controller.

PTI recommends that power and data communication be run through a **single 18 AWG, 4-conductor shielded cable.** Some installations will require larger gauge wire. See for details on connecting the wiring

Additional cables may be needed for the intercom, gate operator, door strike, presence detector, or other device.

- Use a different cable for each device.
- Use approved electrical conduit to supply the wiring to the APEX.
- Local building codes determine the actual installation techniques and wiring methods.
- Only licensed contractors should install APEX devices.
- Correct installation methods are critical for a trouble-free keypad. Most of the problems that emerge during use can be traced back to poor installation techniques or improper wiring
- All installations must conform to local building and electrical codes. When there are discrepancies between local code and this manual, local code takes precedence.

The system will not operate properly if the voltage is below 12VDC. Extreme care should be taken when choosing a power supply voltage and current rating. Long distance runs may require installing a remote power supply.

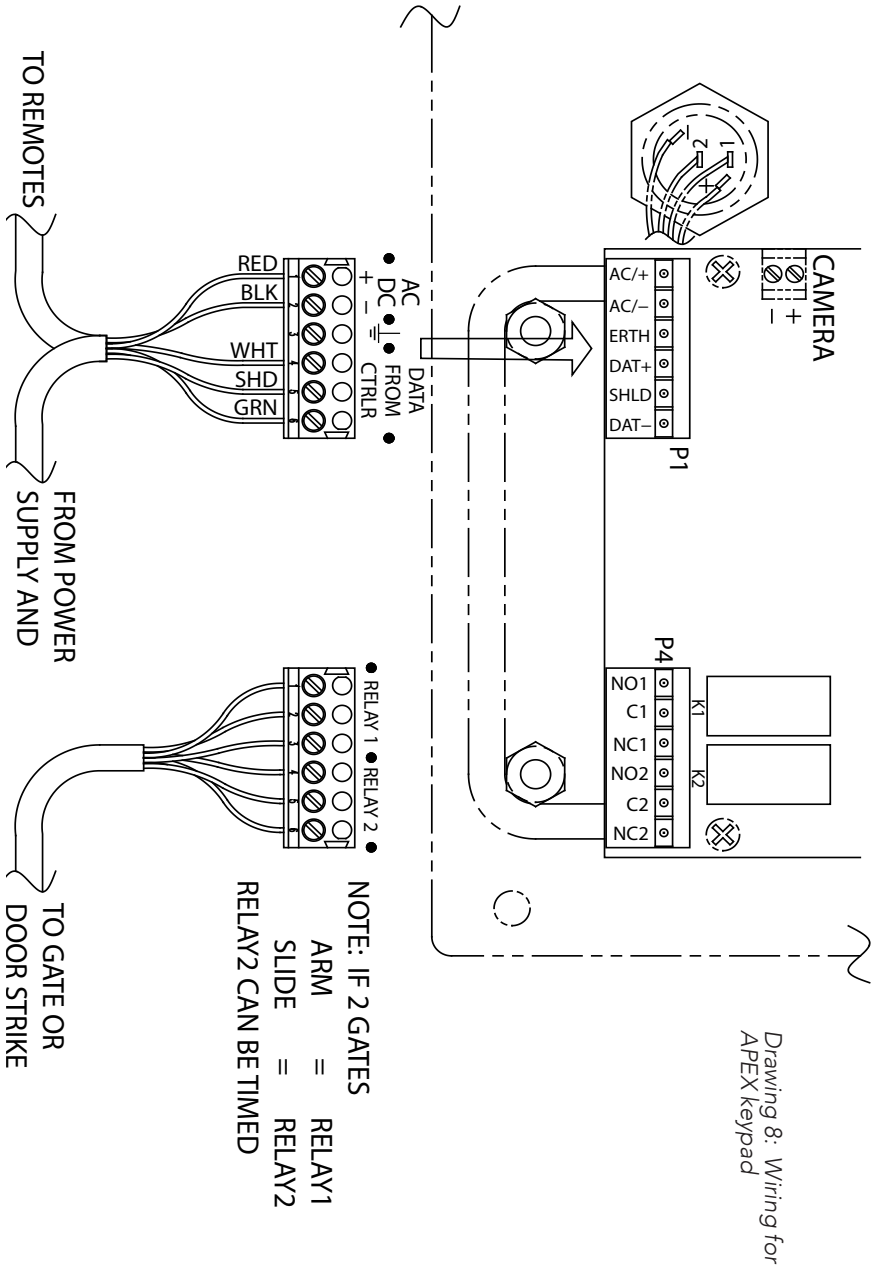

Drawing 8: Wiring for APEX keypad

Installation Instructions

1 Open the device by removing the four stainless steel button head machine screws on the front of the keypad faceplate using the security hex key provided with the unit. The front and back half will separate.

2 Mount the back plate to the desired keypad location using the three-keyed holes. Seal around the back of each screwhole and around the back of the wire hole with an outdoor silicone sealant as shown in"Drawing 9: silicone seal for goosneck" on page 11

- If the keypad is being mounted on a gooseneck or bollard, run a bead of silicone in a triangle around the three screwholes as shown in Drawing 9 on page 11:
- If the keypad is being mounted on a wall, before mounting, run a bead of silicone in a square around the back of the keypad about ½ inch from the edge.

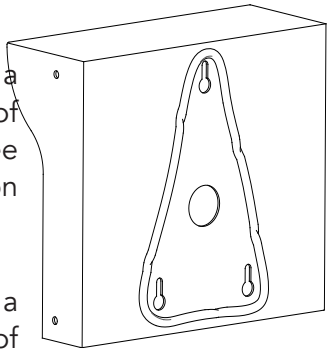

Drawing 9: silicone seal for goosneck

3 Pull the necessary wires through the wire hole on the back of the housing. Allow an extra 1 foot of wire to remain inside the housing. After the wire connections are complete, excess wire can be pushed back into the gooseneck or wall or it can be carefully positioned inside the keypad housing for future maintenance and service. Each keypad should have the following wires as shown in "Drawing 10: KP wiring for the APEX keypad" on page 12:

Drawing 10: KP wiring for the APEX keypad

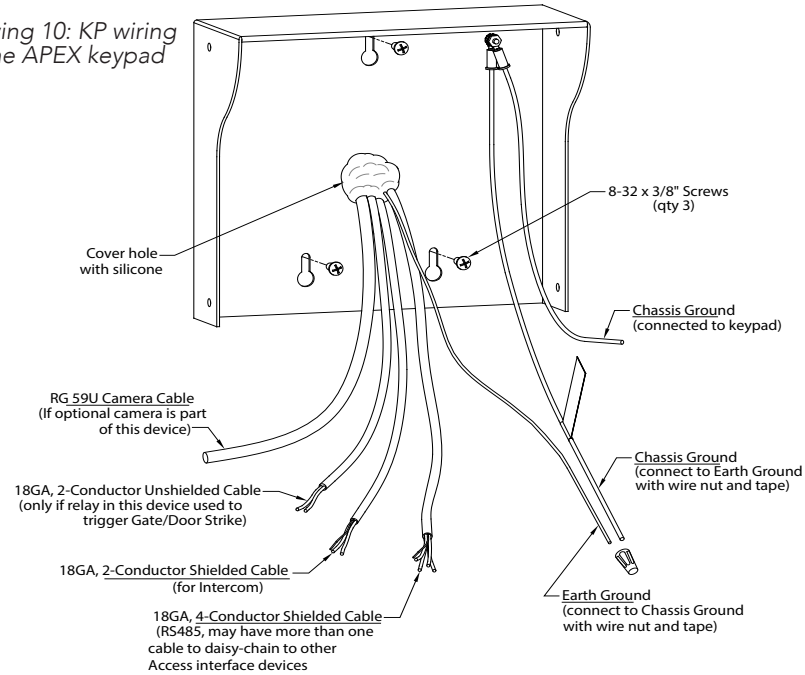

- One of 18 AWG, 4-conductor, shielded cable coming in from the controller or from the previous AI device in line.
- One of 18 AWG, 4-conductor, shielded cable going out to the next AI device in line (if there is another AI device down the line).
- One of earth ground wire
- One or two of 18 AWG, 2-conductor cable(s) coming from the gate operator or door strike.

  A cable for the door strike or gate operator will only be present if the relay inside the specific keypad is used to trigger the door or gate. The controller can be configured to trigger a gate or door using relays on the circuit board, a separate relay board, or any other AI device.

  For security reasons, the relay in the keypad nearest a door or gate should not be the one used to directly trigger the door or gate.

- One of 18 AWG, 2-conductor, shielded cable coming from the intercom base station if intercoms are being used.
- 1 of RG59U video cable if a pinhole camera is being used.
- One of 18 AWG, 2-conductor cable for the presence sensor if it is being used.

4 Strip back the outer insulation and shield foil from both of the 18 AWG, 4-conductor, shielded cables (coming from the controller or previous AI device in line and going out to the next AI device in line), being careful not to cut the bare shield wire. Strip ¼ inch of insulation off the end of each of the individual colored conductor wires.

5 Remove the terminal blocks from the keypad circuit board by sliding them up and off.

6 **For Terminal Block P1** "Drawing 11: Terminal block P1 wiring" on page 13 Insert both **red** wires (coming in from the controller and going out to the next AI device) into **terminal slot 1** on the first terminal block **(P1)**.

Drawing 11: Terminal block P1 wiring

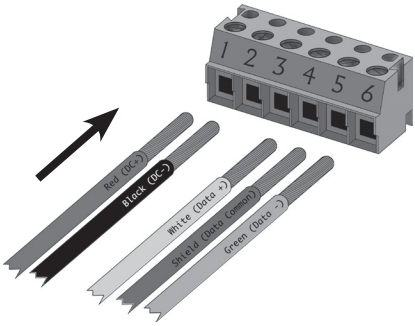

Terminal Block P1 (Left)

1. Red DC + *
2. Black DC – (see footnote)
3. Earth Ground (if applicable)
4. White Data +
5. Shield**
6. Green Data –

* If using AC power, place the AC wires in slots 1 and 2. We recommend 12-18 VAC or DC can be used.

** Shield wire should be insulated with heat shrink or electrical tape.

7 Ensure that both wires are seated all the way inside the slot. Use a flathead precision screwdriver to tighten down the terminal screw.

8 Verify that the terminal slot has tightened down on the copper wire and not on the rubber insulation. There should be no copper wire showing outside of the terminal slot. Gently tug the wires to verify that they are tightly held inside the terminal slot.

9 Repeat this process with each of the remaining wire connections as shown in "Drawing 11: Terminal block P1 wiring" on page 13. Insert both **black** wires into **terminal slot 2** on **P1**. Ensure that both wires are seated all the way inside the slot.

10 For **terminal block p4** "Drawing 12: Terminal block P4 wiring" on page 14 The right (relay) terminal block is used for the relay connections. **Pins 1, 2**, and **3** are for the **first relay** and **Pins 4, 5,** and **6** are for the **second**.

Drawing 12: Terminal block P4 wiring

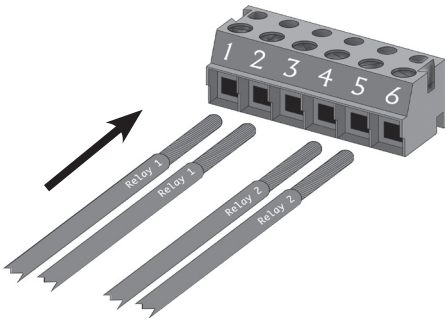

Terminal Block P4 (Right)

1. Relay 1 Normally Open Wire
2. Relay 1 Common Wire
3. Relay 1 Normally Closed Wire
4. Relay 2 Normally Open Wire
5. Relay 2 Common Wire
6. Relay 2 Normally Closed Wire

11 Refer to the gate or door strike manufacturer's instructions to determine whether it needs to be connected to the normally open and common or to the common and normally closed.

12 Relay 2 can be programmed to serve any of a number of functions using both the internal APEX programming and/or the software.

13 The earth ground wire is connected in locations where the keypad is mounted on a wall that is wood, stone, or other nonconductive material. It is not always necessary when it is mounted on a grounded bollard or gooseneck.

Loose uninsulated wires (Typically used for earth ground) cannot be located inside the unit's case. Make connections for uninsulated ground wire outside the case.

14 To connect the ground wire, run a copper wire from a grounded water pipe or from a copper rod in the ground to the keypad and connect it to the green earth ground wire using a wire nut. In this case, **Jumper J1** should be set to **'Normal'**.

15 This installation must meet applicable code as the type of wire, depth of burial, and size of the rod may vary by municipality

16 **Connect any additional features such as an intercom, gate operator, or pinhole camera. Details are on page 16 to page 22.**

17 After all wiring is complete, gently push the excess wire back through the hole in the wall or gooseneck, leaving just enough slack to allow the keypad to be opened for service or maintenance. Seal the back wire hole with outdoor-rated silicone sealant and then screw the housing back together.

Connecting Additional Features

The VP keypad may have additional features and functions. They need to be connected after steps 1 - 16

Intercom

Connect the wires to **terminal block P2** in the upper left corner of the board as shown in "Drawing 13: Intercom wiring layout" on page 17 The connection and jumper settings will vary depending on whether the intercom is LEF Single Master Station, LEF Multiple Master Station, or NEM type intercom. Refer to the manufacturer's instructions.

Remember to set the jumper settings as shown in "Drawing 14: Intercom jumper settings" on page 17.

The **APEX device** can be connected to an **Aiphone LEF or Aiphone NEM intercom.**

- The intercom wiring must be separate from all other wiring to the APEX. Use 18 AWG, 2- or 3-conductor shielded cables for the intercom depending on the type of intercom being used.

- The intercom type jumpers on the APEX circuit board must be set to match the type of intercom being used. Refer to the Aiphone specifications for more detail.

- The intercom type jumpers on either keypad circuit board must be set to match the type of intercom that you are using, so reference the configuration table in Drawing 14 on page 17.

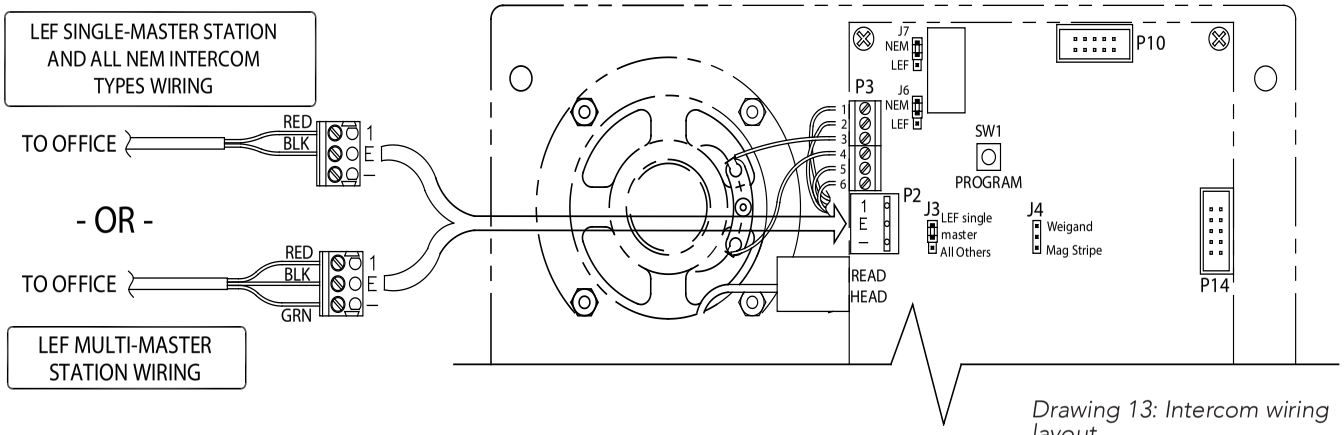

Drawing 13: Intercom wiring layout

INTERCOM JUMPER CONFIGURATION TABLE			
INTERCOM TYPE	APEX JUMPER CONFIGURATION		
NEM (ALL)	J7 NEM / LEF	J6 NEM / LEF	J3 LEF Single Master / All Others
LEF (ALL BUT SINGLE MASTER STATION)	J7 NEM / LEF	J6 NEM / LEF	J3 LEF Single Master / All Others
LEF (SINGLE MASTER STATION)	J7 NEM / LEF	J6 NEM / LEF	J3 LEF Single Master / All Others

Drawing 14: Intercom jumper settings

Pinhole Camera

Connect the video signal cable using RG59U cable and BNC type connectors. This will give the best picture from the keypad camera. The keypad circuit board provides pinhole camera power.

In some situations, it may be necessary to install a video amplifier or a video isolator depending on how the video system is installed."Drawing 16: Pinhole camera wiring" on page 18 for information on connecting the camera.

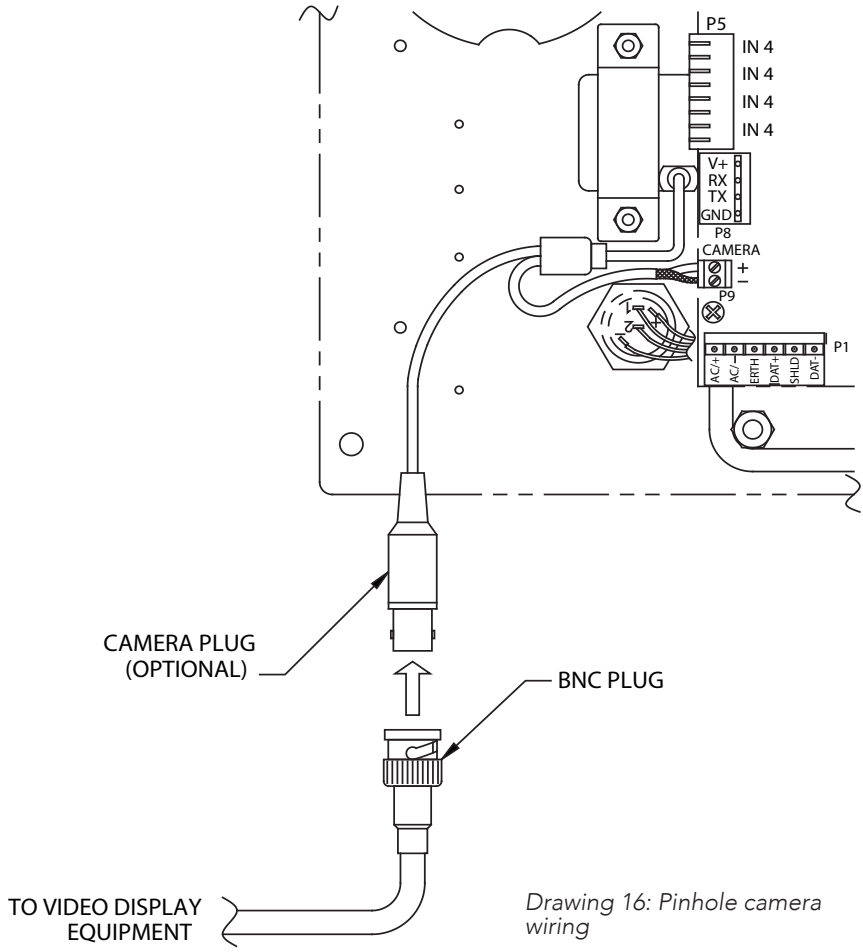

Drawing 16: Pinhole camera wiring

Gate Operator

Most gate operators use a single dry contact to trigger the gate to open. See "Drawing 17: Gate operator wiring" on page 20 for details on connecting a gate operator to the APEX.The APEX is equipped with two form C relays for use with gate operators. Both relays are connected to the removable terminal block at the lower right corner of the board **(P4)**, see "Drawing 17: Gate operator wiring" on page 20.

Make sure the signal from the operator meets the electrical specifications for the relays. **DO NOT USE ANY HIGH VOLTAGE SIGNALS.**

Refer to the gate operator manual for the gauge of wire required.

The pin connections for the connector are as follows:

Pin 1	Relay 1 **Normally Open**
Pin 2	Relay 1 **Common**
Pin 3	Relay 1 **Normally Closed**
Pin 4	Relay 2 **Normally Open**
Pin 5	Relay 2 **Common**
Pin 6	Relay 2 **Normally Closed**

A gate operator can be connected to either relay depending on how the APEX is setup and more than one operator can be connected to a single APEX device. If two or more APEX devices trigger a single gate, that gate only needs to be connected to one device.

For improved site security, the gate operator should not be connected to the APEX unit used for entry. This prevents access to the facility by vandalizing the entry APEX unit.

Drawing 17: Gate operator wiring

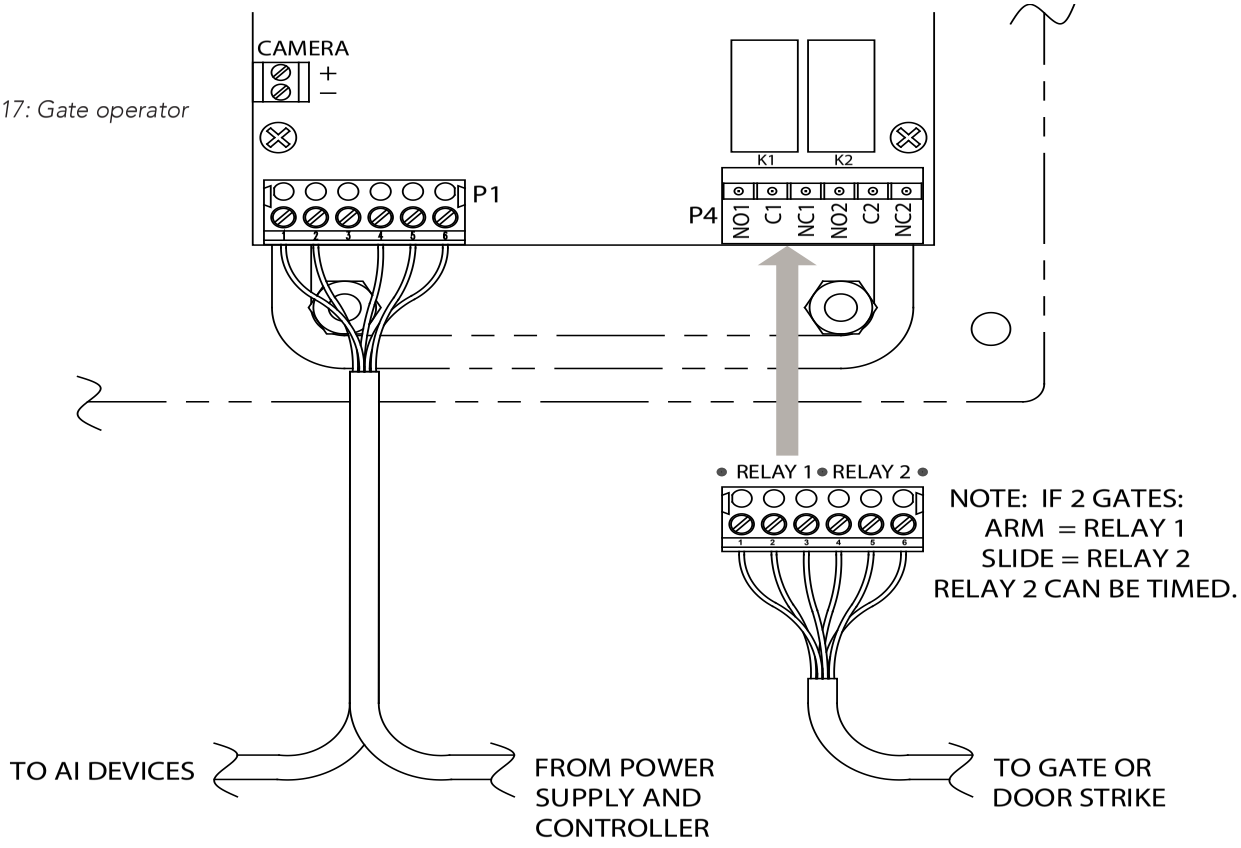

Door Strike

The door strike connection is similar to a gate operator connection, except that the door strike requires power supplied by an external power supply. The type of door strike determines the power supply used.

Do NOT use the same power supply that provides power to the APEX device.

Refer "Drawing 18: Door strike wiring" on page 22 to for details of connecting the door strike

If extended door controls are used

↓

Door strike must be connected to **Relay 1**

↓

Door contact must be connected to **Input 1**

↓

(if used) Request to exit device must be connected to **Input 2**

Inputs 1 and 2 cannot be used for any other function while Extended Door Controls are enabled.

In "Drawing 18: Door strike wiring" on page 22, the two wires that connect to the relay are **labeled C1 and NO1**. These should be connected to the **Common** and **Normally Open** contacts of one of the relays. The door strike can be connected to either relay if the Extended Door controls are not being used.

Drawing 18: Door strike wiring

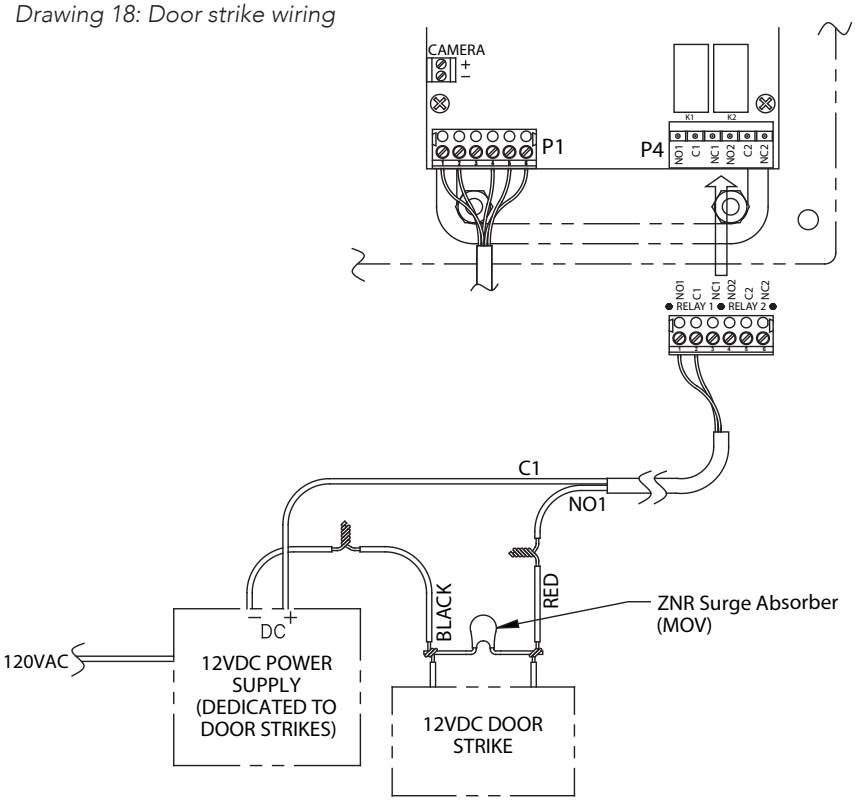

18 After all wiring is complete, gently push the excess wire back through the hole in the wall or gooseneck, leaving just enough slack to allow the keypad to be opened for service or maintenance. Seal the back wire hole with outdoor rated silicone sealant and then screw the housing back together.

Testing the Keypad

1 Test the display by applying power to the keypad.

- The default date and time should appear on the display after power is applied.
- The controller displays the date and time to the keypad once a minute. The date and time on the display should update if the keypad is configured correctly.

2 To verify that the backlight is working:

- Press the * key. The backlight should light up and the display will read `Please Enter Access Code.`
- If no keys are pressed within 10 seconds, the display will return to the `Date/Time` and the backlight will shut off.

3 To test touchpad operation:

- Press the `*` key. When the display shows `Please Enter Access Code`, press `0, 1, 2, 3, 4, 5, 6, 7, 8, 9`. Each digit should appear on the display as it is pressed (if Secure Entry is enabled a `*` for each digit appears on the display)
- Press the `#` key to transmit the code to the controller, the display will show `Please Wait` until a response is returned from the controller.
- If the keypad is communicating with the controller, the display will show either `Entry Granted` or another corresponding message.

4 Test for communications with the controller

- Power up the controller. The date and time at the controller will automatically update on the keypad and appear in the display. This verifies communications from the controller to the keypad.
- Test communications from the keypad to the controller by entering an access code into the keypad and pressing the # key.

5 If the keypad display responds with anything other than `Please Wait` before returning to the date and time, the keypad has successfully communicated with the controller.

6 If the keypad displays `Please Wait` then returns to `12:00` (the power-up default time), recheck the wiring, baud rate settings, and address settings. Also ensure that the controller is set to the correct number of remotes.

Operation

Input/Output Descriptions

Relay Outputs

The APEX Access Device is equipped with two Form C relays:

Relay 1 is used to trigger an access point (door strike, gate operator, etc.).

Relay 2 can be used for several different functions depending on the options set.

Relay 2 can be set for See the APEX Access Device Setup Function section for instructions on changing the settings	SLAVE TO RELAY 1
	DIFFERENT HOLD TIME
	AUX. OUTPUT
	HOLD OPEN BY TIME
	ALARM OUTPUT.

Slave to Relay 1.

- With this function, Relay 2 will operate simultaneously with Relay 1.
- Some installations may use a secondary slide gate as well as a barrier gate.
- In these applications, Relay 2 can be used to trigger the secondary gate at the same time as the primary gate and eliminate the need for an isolation relay

Different Hold Time.

- This function causes Relay 2 to trigger at the same time as Relay 1 but remain active for a different length of time.
- Using the previous example, the two gates may require different trigger times. The barrier gate may require a hold time of 1 second and the slide gate a hold time of 5 seconds. In this case, use the `DIFFERENT HOLD TIME` option.

This function can also be used to activate a door holder. See Using Extended Door Controls for more information.

UX Output.

- **This the default setting** where Relay 2 can be used for any external device or secondary access point.
- It responds just like a relay on the relay board. This function is useful for lighting zones, elevators, or additional gates or door strikes.
- This feature is set up in the control software.

Hold Open By Time.

- This function allows the second relay to activate for a certain period of time each day. If two gates are used, it is possible to keep the secondary gate open during certain hours. .
- For this configuration, select the `HOLD OPEN BY TIME` option, then set the hours for Relay 2 to Active. Every day of the week can have different open and close hours.
- For example, a site may want the slide gate across the main entrance to stay open during regular business hours and use the barrier gate for access. After hours, both gates remain closed and must activate to allow entry and exit.

- In addition, holiday hours can be set and one holiday date entered. On the holiday date, the holiday hours will be used instead of the regular hours. Only one holiday date can be programmed and a new date must be reprogrammed after each holiday.
- If the `SLAVE AFTER HOURS` option is enabled, Relay 2 will act as a slave to Relay 1 outside the programmed hours.

```
Alarm Output.
```

- Relay 2 can be used to turn on an alarm device, such as a siren or strobe, when an alarm occurs. Any system alarm will trigger this relay.

The hold time for Relay 1 is determined by the controller and not by the APEX except when extended door controls are used.

Dry Contact Inputs

These four optional inputs are used with a dry contact input device such as a unit door, office door switch, or relay. The contact must be a dry contact device that does not source any voltage. Contacts are on terminal block P5 as shown in "Drawing 19: Dry contacts inputs" on page 29.

Each input has multiple functions depending on the options set. If no options are set, the four inputs will operate and report to the controller as standard door contacts.

The multiplexer number is the unit address of the APEX device and the channel is the input number (1 - 4). If alternative functions are enabled, they disable the door reporting functions for these inputs

Inputs 1 and 2 – Extended door controls	When extended doors are set: Input 1 is used for the door contact Input 2 is used for a request to exit device contact. See "Using Extended Door Controls" on page 30 for more information.
Input 3 – Presence Sense	When the presence sensor is enabled: Input 3 is used. When enabled, an input from a vehicle loop detector, or a pressure mat is needed before the keypad will accept any input. This prevents people from walking up to a drive-through gate and entering a code.
Input 4 – Intercom Call	Used with the `Intercom Call Report` function. When the intercom call report option is selected, any contact on Input 4 will report as an intercom call to the controller. A special call button switch is necessary for this option.

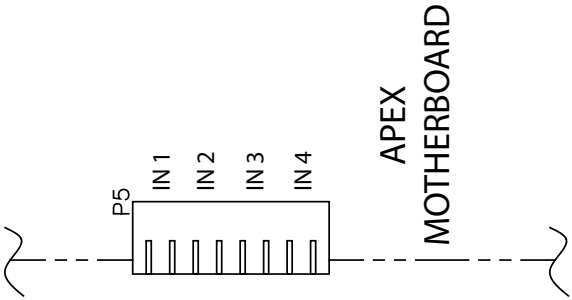

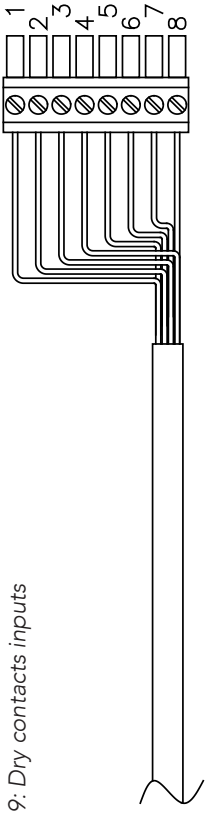

Drawing 19: Dry contacts inputs

DRY CONTACT INPUTS:

IN 1 = DOOR CONTACT
IN 2 = REQUEST TO EXIT
IN 3 = PRESENCE SENSE
IN 4 - INTERCOM CALL

NOTES

1. Dry contact inputs only for both extended mux channels and extended doors wiring.

2. Common wires connected to even numbered terminals of connector (terminals numbers shown above for reference)

Using Extended Door Controls

The extended door controls function allows comprehensive access management. The controls are normally used with an entrance door, but can be used for a gate or other access device. Extended door controls use four connections:

Input 1	door alarm contact
Input 2	request to exit device
Relay 1	trigger the door strike
Relay 2	activate a door holder

When the extended door control function is enabled, other functions for these inputs are disabled.

Open the Door

Operating this function requires a door equipped with a door strike and a door alarm contact.

- The **door strike** is connected to **Relay 1**.
- The door **alarm switch** will be connected to **Input 1**.
- The APEX activates **Relay 1** for the `Door Strike Time` entered during setup programming. This allows the APEX device to activate the door from a request to exit device.
- **Relay 1** activates the door strike when a valid access command is sent from the controller.

  This is the only case where the hold time for **Relay 1** is not determined by the controller. Instead it is set by the Door Strike Time parameter Setup Function.

Once the door strike is activated, the door can be opened.

Close the Door

To prevent the door from being held or propped open, the `Max. Door Open Time` parameter can be defined in the Setup function, on page 39.

- If the door is held open longer than the time specified by the `Max. Door Open Time`, the controller will respond with an alarm and the `Door Held Open` message.

- When the door is closed, the controller will report `Door Closed`.

Hold the Door Open

If an optional door holder is installed, **Relay 2** will control that device. When the door is opened by the controller or by the RTE device, Relay 2 activates to turn on the door holder and hold the door open.

To use a door holder, **Relay 2** must be set for `DIFFERENT HOLD TIME`, see page 35 in the APEX Device Setup Function. The period of time to hold the door is specified by the Relay #2 Hold Time parameter. **Note:** this time must be set to a value less than the `Max. Door Open Time` to prevent false alarms.

Request to Exit

If an request to exit (RTE) device is added to **Input 2**, the door strike is activated by the controller or the signal from the RTE device. A request to exit (RTE) device is typically a push button or motion detector designed to open a door from the inside.

- If the door is opened without **Relay 1** being active, the controller will respond with an alarm and the `Door Held Open` alarm message.

APEX Access Device Setup Function

To enter Setup mode:

1. Press the *, 0, and # keys simultaneously
2. Enter the factory default password: 8898
   *It is highly recommended that you change the setup password when prompted during the install.
3. Press the # key

NOTE: In the event the password is changed and then forgotten, disconnect power from the APEX, then hold the program button while reconnecting power. This will bypass the password prompt and enter the Setup mode directly. When using this method, you will be prompted to Restore Factory Defaults. Select Yes to restore all default factory settings including the site name and password.

Press the # key to advance through each setup parameter.

A parameter is automatically saved when you press # and move to the next parameter.

If the timeout is allowed to occur, the current parameter will NOT be saved.

Numeric values are entered directly into the unit using the number keys.

When an option is presented, use the * key to scroll through the available settings.

There are three (3) ways to exit Setup mode:

- Press the 7, 8, and 9 keys simultaneously
- Go through all of the setup functions
- Press the program button on the circuit board

A timeout is built into the system that will exit Setup mode if there is no input on the keypad for an extended period of time.

Setup Parameters / Functions

Setup parameters in the order displayed by the APEX access device are:

RESTORE FACTORY DEFAULTS? Press * for YES Press # for NO	This prompt only appears if the program button is held while power is applied to the APEX device. Pressing the * key to select YES will restore all of the factory defaults. **WARNING:** This will overwrite all setup parameters including the setup password and the site name.
Restoring Defaults	Shown only while the APEX device is restoring the factory defaults.
Defaults Restored! Press # to Continue	Shown after the factory defaults are restored.
Current Address: 001 Enter New Address: PRESS # WHEN DONE	Polling address used by the controller. Any number from 1 to 127 can be entered. Each device connected to the controller must have a unique address. The factory default is 1. **The numbers 0 and 22 cannot be used.**
Communications Rate:9600 Press * to Change PRESS # WHEN DONE	The communications baud rate used by the controller. Scroll through the list of available rates by pressing the * key. The factory default is 9600.

At this point, the basic parameters required for operation have been entered. If no other options are active or required, you can exit the setup mode. Following are optional parameters to customize the feel of the site.

NOTE: Several options allow the setting of time in seconds. When minutes are desired, multiply the number of minutes by 60 to get the number of seconds. For example: 3 minutes × 60 seconds per minute = 180 seconds.

Change the Setup Password? Press * for YES Press # for NO	Allows you to change the setup password from the factory default of 8898. When YES is selected, the unit will prompt for the new password. The new password must be entered twice for verification before it will be changed. If both passwords entered match, the password will be changed. Otherwise, a message will indicate that the passwords do not match. *It is highly recommended that you change the setup password when prompted during the install.
Tamper Sensor is: ENABLED Press * to Change PRESS # WHEN DONE	Controls the use of the tamper sensor. Options are ENABLED and DISABLED. If enabled, the keypad will not function and an alarm will occur from the controller if the unit is tampered with. Factory default is ENABLED.
Secure Code Entry? NO Press * to Change PRESS # WHEN DONE	Controls the characters displayed during code entry. When set to YES, the display will show only * for each key pressed. When set to NO, the numbers pressed will be echoed to the display. Factory default is NO.
Beep with Key Press? YES Press * to Change PRESS # WHEN DONE	Controls the internal buzzer used to provide audio feedback for any key press. When set to YES, the buzzer will produce a short beep when a key is pressed. When set to NO, the buzzer will not sound with key presses. Factory default is YES.

Beep with Access? YES Press * to Change PRESS # WHEN DONE	Causes the internal buzzer to sound when access is attempted. A valid access will cause the buzzer to sound one long beep. All other attempts will cause the buzzer to sound four short beeps. Factory default is YES (on).
Sound Buzzer w/Alarm: NO Press * to Change PRESS # WHEN DONE	Controls the internal buzzer used to provide audible feedback when a system alarm occurs. When set to YES, the internal buzzer will sound whenever an alarm occurs and will remain on until the alarm resets from the controller. When set to NO, the internal buzzer will not sound when an alarm occurs. Factory default is NO.
Current Language: ENGLISH Press * to Change PRESS # WHEN DONE	Allows user messages to be displayed in one of nine languages. The other languages are French, Spanish, Danish, Norwegian, German, Dutch, Portuguese, and Italian. Only user messages are changed, the setup functions remain in English. Factory default is English.
Time Format: 12 Hr. Press * to Change PRESS # WHEN DONE	Controls how the time is displayed. Options are 12 Hour and 24 Hour. The 12 Hour displays the time as HH:MM:SS followed by am or pm. The hour will be displayed as 12:00:00 am to 12:00:00 pm. The 24 Hour format displays the time as HH:MM:SS without the am or pm indicator. The hour will be displayed as 00:00:00 to 23:59:59. The factory default of 12 Hour.
Relay #2 Function: AUX. OUTPUT Press * to Change PRESS # WHEN DONE	Controls the function of Relay 2. Options are ALARM OUTPUT, HOLD OPEN BY TIME, SLAVE TO RELAY 1, DIFFERENT HOLD TIME, and AUX. OUTPUT. Each option is described in detail. The factory default is AUX. OUTPUT
When Relay #2 is set for: SLAVE TO RELAY #1	Causes Relay 2 to operate at the same time as Relay 1. This allows it to be used for a secondary device without having to put in a separate isolation relay.
When Relay #2 is set for: DIFFERENT HOLD TIME	Relay 2 operates at the same time as Relay 1 but is activated for a different length of time. This is useful when dual gate operators or door holders are used that require different activation times. When this option is selected, the following prompt will appear.

Relay #2 Hold Time In seconds: 001 PRESS # WHEN DONE	Sets the hold time for Relay 2 when Relay 2 has a DIFFERENT HOLD TIME from Relay 1. The maximum time is 255 seconds
When Relay #2 is set for: AUX. OUTPUT	Causes Relay 2 to operate as a separate relay for door or gate access, lighting zones, elevators, etc. It is independent of Relay #1 and controlled by the controller. This feature allows the APEX to be used as a 2-channel relay as well as an access device.
When Relay #2 is set for: ALARM OUTPUT	Activates Relay 2 when a system alarm occurs, allowing the relay to be used to control an external siren horn or other alarm device.
When Relay #2 is set for: HOLD OPEN BY TIME	Allows Relay 2 to be used for a secondary slide gate or other overlock device that will be held open at a fixed time of day. You can set the open and close times for each weekday and for holidays. The next holiday date is also programmed.
Enter MONDAY OPEN Time PRESS # WHEN DONE	Sets the time of day on Monday that Relay 2 will activate.
Enter MONDAY CLOSE Time PRESS # WHEN DONE	Sets the time of day on Monday that Relay 2 will deactivate.
Enter TUESDAY OPEN Time PRESS # WHEN DONE	Sets the time of day on Tuesday that Relay 2 will activate.
Enter TUESDAY CLOSE Time PRESS # WHEN DONE	Sets the time of day on Tuesday that Relay 2 will deactivate.
Enter WEDNESDAY OPEN Time PRESS # WHEN DONE	Sets the time of day on Wednesday that Relay 2 will activate.

Enter WEDNESDAY CLOSE Time PRESS # WHEN DONE	Sets the time of day on Wednesday that Relay 2 will deactivate.
Enter THURSDAY OPEN Time PRESS # WHEN DONE	Sets the time of day on Thursday that Relay 2 will activate.
Enter THURSDAY CLOSE Time PRESS # WHEN DONE	Sets the time of day on Thursday that Relay 2 will deactivate.
Enter FRIDAY OPEN Time PRESS # WHEN DONE	Sets the time of day on Friday that Relay 2 will activate.
Enter FRIDAY CLOSE Time PRESS # WHEN DONE	Sets the time of day on Friday that Relay 2 will deactivate.
Enter SATURDAY OPEN Time PRESS # WHEN DONE	Sets the time of day on Saturday that Relay 2 will activate.
Enter SATURDAY CLOSE Time PRESS # WHEN DONE	Sets the time of day on Saturday that Relay 2 will deactivate.
Enter SUNDAY OPEN Time PRESS # WHEN DONE	Sets the time of day on Sunday that Relay 2 will activate.
Enter SUNDAY CLOSE Time PRESS # WHEN DONE	Sets the time of day on Sunday that Relay 2 will deactivate.

Enter HOLIDAY OPEN Time PRESS # WHEN DONE	Sets the time of day on the next Holiday that Relay 2 will activate.
Enter HOLIDAY CLOSE Time PRESS # WHEN DONE	Sets the time of day on the next Holiday that Relay 2 will deactivate.
Enter the Next Holiday Date: PRESS # WHEN DONE	Sets the next date that will use the holiday hours.
Slave After Hours ENABLED Press * to Change PRESS # WHEN DONE	Allows Relay 2 to activate when Relay 1 is tripped outside of hold open hours. Useful when using a secondary gate. Factory default is Enabled.
Max. # of Attempts Before Lock Out: 000 PRESS # WHEN DONE	Sets the maximum number of attempts within a one minute period before the APEX will prevent further code entry. If the number is set to three, then after three successive attempts with invalid codes, the user will be locked out. The lockout remains active for 60 seconds after the last key press. If the user keeps pressing keys the lockout time will continue to be reset. The maximum value is 10. Factory default is 000, which disables the lockout feature.
Use Custom Message? NO Press * to Change PRESS # WHEN DONE	Displays a third message on the display before any key is pressed. The APEX will scroll through three messages instead of two and allows communication with customers. It cannot be changed from the controller. Factory default is NO.
Trip Relay Offline? NO Press * to Change PRESS # WHEN DONE	Causes Relay 1 to trip if the APEX is not communicating with the controller. **WARNING**: Improper use of this option leave your site vulnerable. Do not set this option on an entry keypad. Factory default is NO.

Current Comm. Off Time (seconds) 005 PRESS # WHEN DONE	Sets the amount of time the APEX should wait before considering it has lost communication with the controller. Any value from 1 to 255 seconds can be entered. Factory default is 5 seconds.
Extended Door Ctls: DISABLED Press * to Change PRESS # WHEN DONE	Sets the extended door controls and requires the optional inputs. When ENABLED, the device allows control of a door with request to exit inputs and hold open alarm notification. Input 1 is used for the door alarm contact and Input 2 is used for the request to exit device contact. Relay 1 is used to activate the door strike so that it will open and Relay 2 is used to activate a hold open device for the door. Factory default is DISABLED.
Door Relay Time In seconds: 000 PRESS # WHEN DONE	The length of time (in seconds) for the door relay to be active. The user must open the door during this period of time or the door will not open. The maximum value is 255 seconds. Factory default is 2 seconds.
Max Door Open Time In seconds: 00000 PRESS # WHEN DONE	The number of seconds the door can be held open before an alarm is sent to the controller. If a door is open over this time, the alarm will sound. The maximum value is 65,535 seconds. The maximum value translates to 1,092.25 minutes (65535 seconds / 60 seconds per minute) or 18.2 hours (65535 seconds / 3600 seconds per hour). This feature is available when using extended door controls. Factory default is 30 seconds.
Presence Input Req. NO Press * to Change PRESS # WHEN DONE	**Requires optional inputs.** Input #3 must be active before a code can be entered. Used when a vehicle sensor is required in a driveway or traffic area. When set to YES, Input #3 is dedicated to this function and cannot be used as an alarm input. Factory default is NO.

`Intercom Call Report: NO`
`Press * to Change`
 	
`PRESS # WHEN DONE`
	Requires optional inputs. Allows the controller to report an intercom call.
	
	When set to `YES`, Input 4 is used for intercom calls. The exact configuration of the connection depends on the type of intercom. This option requires an intercom call button. Factory default is NO.

`Change the Displayed Site Name?`
`Press * for YES`
`Press # for NO`
	Allows change to the site name screen display. If `YES` is selected, setup will proceed to the following step. Select `NO` to jump to the last parameter

`Site Name 1st Line:`
`Your Storage`
`*=Left #=Right`
	Change the first line of the site name for display on the screen. Use the * and # keys to move left and right through the line. When the cursor is on a character, it can be changed by repeatedly pressing the corresponding number key until the desired character appears (similar to the method used for older cell phones).Each key has both number and letter functions. **A space is the last character on every key**
	
	Below is a list of keys and the characters they represent in the order they appear:
	`1: 1QZqz.,`
	`2: 2ABCabc`
	`3: 3DEFdef`
	`4: 4GHIghi`
	`5: 5JKLjkl`
	`6: 6MNOmno`
	`7: 7PRSprs`
	`8: 8TUVtuv`
	`9: 9WXYwxy`
	`0: 0-#*$@'`

`Site Name 2nd Line: Facility`
`1=1QZqz., 0=0-#*$@'`
`*=Left #=Right`
	Change the second line of the site name for display on the screen. Use the same process as above.

`Setup Complete`
 	
`PRESS # WHEN DONE`
	Message displayed on exit from setup mode. Press the # key to return the device to normal operation. If no key is pressed, the device will return to normal operation after a few seconds and all information will be automatically saved.

Standard Display Messages

The APEX has two standard messages and one optional message that are displayed when the power is on and no other functions have been selected. The display will switch between the messages approximately once every 5 seconds. The two standard messages are the `date and time` message and the `Welcome to...` message. The third message is an optional custom message.

Date and Time Message

The default time and date message. It is the first of two standard messages that the APEX displays not in use. When the APEX is configured for reading magnetic stripe or proximity cards, the bottom line of the display will show `Use Card or Press *`.

```
Wednesday 06/22/09
    12:01:15 pm
 Press * to begin
```

Welcome to... Message

This is the second standard message display when not in use. The two middle lines can be changed in the setup function to reflect the company name, or a greeting. Each line has a maximum of 20 characters. When the APEX is configured for reading magnetic stripe or proximity cards, the bottom line of the display will show `Use Card or Press *`.

```
     Welcome to
   Your Storage
     Facility
 Press * to begin
```

Access Codes and Cards

Depending on system configuration, the user will have an access code to enter, or a magnetic stripe card to swipe. When the user approaches the device, one of the standard display messages will be shown on the display. The system prompts the user with the message `Use Card or Press *`.

The display and keypad are backlit at a low level to conserve power when the device is inactive. This low level is sufficient to read the display at night. As soon as a customer enters a code or presents a card, the display returns to full brightness.

Access Codes

To enter a code, the user presses *. The following message will be displayed.

```
* PLEASE ENTER *
YOUR ACCESS CODE
PRESS # WHEN DONE
```

The user enters their access code using the touchpad and presses the # key. The APEX will send the code to the controller and wait for a response while the APEX goes through the security checks described in "Security Checks" on page 44. The message on the display will change to the following while waiting for a response.

```
* PLEASE WAIT *

VERIFYING ACCESS
```

Magnetic Stripe Cards

When the APEX is set to use magnetic stripe cards, the user swipes their card through the slot in the card reader on the APEX. The orientation of the card is important, the magnetic stripe on the card must be aligned to pass through the slot facing the wide side of the reader. If the APEX is not able to read the card correctly or if there is an error on the card, the following message will be displayed:

```
* WE'RE SORRY *

PLEASE TRY YOUR CARD
AGAIN
```

After reading the card, the APEX goes through the security checks described in "Security Checks" on page 44. The `Verifying Access` message will be displayed while waiting for a response.

Proximity Cards.

When the APEX is set to use proximity cards, the user places their card against the card reader on the APEX. The orientation of the card is not important. If the APEX cannot read the card correctly or if there is an error on the card, the following message will be displayed:

```
* WE'RE SORRY *

PLEASE TRY YOUR CARD
AGAIN
```

After reading the card, the APEX goes through the security checks described in "Security Checks" on page 44. The `Verifying Access` message will be displayed while waiting for a response.

Security Checks

APEX performs a series of security checks before allowing entrance. These checks are used to prevent unauthorized access attempts. When a customer uses an access code, the checks are performed as soon as the code is entered. If the customer uses a card, the checks are performed as soon as the card has been swiped in the magnetic stripe reader or presented to the proximity reader.

Tamper Check

The APEX performs a tamper check to see if the tamper switch has been enabled. If the switch is enabled, APEX ensures that the switch is secure. If both conditions are true or the tamper is disabled, the APEX will proceed to the next security check. If the APEX detects tampering, it will display the following message and no further access attempts will be allowed.

```
* WE'RE SORRY *

THIS UNIT HAS BEEN
TAMPERED WITH
```

Presence Required Check

After checking the tamper, the APEX will check if the Presence Required option has been selected. If it has been selected, the APEX will check the input to see if a presence has been detected. If this option has been turned off or if a presence has been detected, the APEX will continue with the next security check.

If the APEX does not detect a required presence, it will display the following message and no further access attempts will be allowed.

```
* WE'RE SORRY *

NO PRESENCE HAS BEEN
DETECTED
```

Maximum Attempts Check.

The maximum attempts security check is designed to discourage someone from attempting numbers at random to enter the site. If the Max. Attempts before Lockout feature is set to a value other than zero, the APEX will check to see if the user has tried a code more than the allowed number of times. If not, the APEX will proceed to the next security check.

If the maximum number of unsuccessful attempts has been exceeded, the APEX will display the following message and disable any further access attempts. The APEX will not allow any further attempts until it has had 60 seconds without any key being pressed. If a key is pressed while this message is displayed, the 60 second timer starts over.

```
* WE'RE SORRY *

PLEASE SEE THE
MANAGER
```

Trip Relay Offline Check

The final security check for the APEX is to check the Trip Relay Offline option. If it is enabled, the APEX allows the access process to continue. If it has been disabled and the APEX is not in communication with the controller, then the APEX will display the following message and no further access attempts will be allowed.

```
We're Sorry, this
device is out of
service. Please see
the manager
```

After the controller has gone through its security checks, it will verify the code and send a response to the APEX. The response message will be displayed. The messages that can be received from the controller vary depending on the type of response.

Access Response Messages

There are several standard messages built into the APEX to respond to an access request and the message from the controller varies depending on the conditions. The following briefly describes the conditions and the displayed message.

For a valid Entry:

```
Welcome to
Your Storage
Facility
ENTRY IS GRANTED
```

For a valid Exit:

```
THANK YOU FOR USING
Your Storage
Facility
EXIT IS GRANTED
```

When the area is closed (outside of allowed access hours):

```
* WE'RE SORRY *

THIS AREA IS
CURRENTLY CLOSED
```

When the customer is not authorized to enter an area:

```
* WE'RE SORRY *

YOU ARE NOT ALLOWED
INTO THIS AREA
```

When the customer's code has expired:

```
* WE'RE SORRY *

THE CODE YOU ENTERED
HAS EXPIRED
```

When the customer's card has expired:

```
* WE'RE SORRY *

THE CARD YOU ENTERED
HAS EXPIRED
```

When the customer has been suspended:

```
* WE'RE SORRY *

YOUR ACCESS HAS BEEN
SUSPENDED
```

When the code the customer entered is not valid:

```
* WE'RE SORRY *

THE CODE YOU ENTERED IS
NOT VALID
```

When the card the customer used is not valid:

```
* WE'RE SORRY *

THE CARD YOU ENTERED IS
NOT VALID
```

System Maintenance

The APEX Access Device requires a minimal amount of maintenance. However, as with any electronic or mechanical device that is used regularly, a small amount of maintenance done periodically will extend the life of the product.

Periodic Visual Inspection

The APEX should be inspected monthly. When performing the visual inspection, look for the following items:

- Damage caused by contact with vehicles, vandalism, etc.
- Damage caused by water, rain, salt spray, etc.
- Breaks or cracks in the sealant where the keypad mounts to the gooseneck stand or wall

Periodic Cleaning

The keypad should be cleaned at least twice a year. More frequent cleaning may be required in harsh environments.

Cleaning the Housing and Touchpad

Inspect and clean the housing and touchpad at least twice per year.

✓ To clean the housing, spray the unit with a mild household cleaner then wipe it with a soft cloth.

✗ Do not use harsh chemicals, abrasives, or petroleum-based products as they can damage the finish on the device.

✗ Do not immerse the device in water or use a pressure washer. A small, soft brush (a toothbrush works well) can be used to clean between the keys on the touchpad.

Remove the APEX from the housing to inspect and clean the inside of the unit. When inspecting the inside of the housing and the VP, look for the following items:

- Dirt or dust that has collected on the inside of the housing and the circuit board
- Signs of water damage or corrosion caused by prolonged contact to water
- Insects or insect droppings

✓ Wipe out the inside of the housing with a soft cloth to remove any debris that has collected.

✓ A small can of compressed air can be used to remove insects and dust from the circuit board.

✗ **Do not use cleaners of any kind**, including water, to clean inside the housing or on the circuit board.

Cleaning the Magnetic Stripe Reader

The APEX is shipped with a cleaning card for the magnetic stripe reader (if installed). The cleaning card is a small, credit-card sized plastic card with a special cleaning surface on one side that is saturated with a cleaning solution.

To clean the reader, swipe the cleaning card several times through the slot in the reader and dispose of the card after use. Additional cards can be ordered from PTI Security Systems. Always keep a supply of cards on hand.

Troubleshooting

For a **new installation**, typical problems are related to the installation or configuration process. Start at step 1 in the Troubleshooting Steps section and proceed until the problem is found and resolved.

For an **existing installation (previously working)**, determine whether anything has been changed at the site. For instance, Has there been any new construction? This includes any changes to the site, adding units, reconfiguring units, changing or adding video surveillance components, changing any electrical wiring, roofing changes, painting, etc. Even with a small change, wiring can be disturbed or disconnected or something new can interfere with equipment operation.

Keep thorough notes during troubleshooting to compare against and to help find problems, prevent confusion, and save time if site service by a technician is required.

Test Power and Communication

1. Does the APEX Access Device have Power?

Check the display of the APEX. If the display is on, or if any of the LEDs on the board are on, the board has power.
If there is no indication of power from the display or LEDs, use a volt meter to check for the presence of voltage on connector P1 pins 1 & 2.

YES - Proceed to step 2

NO - Check Power Supply and Wiring and retest or see Multiple Device Problems

2. Is the voltage at the APEX, connector P1 pins 1 & 2 greater than 12 Volts? (Use a volt meter to measure the voltage)

Create a voltage map of the site by sketching out the locations of every AI device on the site. Use a multimeter to take DC power readings at each device. Note these readings on the sketch. Any device that is receiving less than 12V is underpowered and can cause the entire system to lock up.

YES - Proceed to step 3

NO - Check Power Supply and Wiring and retest

3. Is the voltage at the APEX, connector P1 pins 1 & 2 greater than 18 Volts? (Use a volt meter to measure the voltage).

Note these readings on the sketch.

YES - Voltage is too high, check power supply and retest

NO - Proceed to step 4

4. Is the APEX display blank?

YES - Replace the APEX and retest

NO - Proceed to step 5

5. Is the APEX communicating with the controller and software?

Check the LEDs on the APEX board or by run the system setup report on the controller. When the APEX is communicating with the controller, LEDs D1 — D6 will be blinking. If only D1 and D4 are blinking, proceed to step 7. See "Drawing 20: LED layout on the APEX board" on page 53 for the LEDs location.

YES - Contact Technical Support if the APEX is still not working.

NO - Check wiring and proceed to step 6

D25 is on when INPUT1 (IN 1) is on
D26 is on when INPUT2 (IN 2) is on
D27 is on when INPUT3 (IN 3) is on
D28 is on when INPUT4 (IN 4) is on

When on, shows communications BEFORE optical isolation:
D1 = RS-485 RX
D2 = RS-485 TX
D3 = RS=485 ENABLE
When on, shows communications AFTER optical isolation:
D4 = RS-485 RX
D5 = RS-485 RX
D6 = RS-485 ENABLE

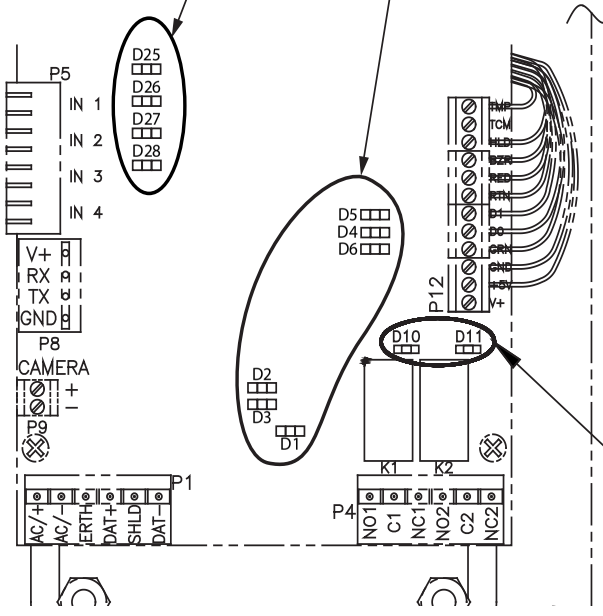

D10 is on when RELAY1 (K1) is activated
D11 is on when RELAY2 (K2) is activated

Drawing 20: LED layout on the APEX board

6. Are any other devices set to the same address as the APEX?

Check the addresses on all of the devices, or disconnect the APEX and run the system setup report on the controller. If the system setup report shows the remote number (address) assigned to the APEX as being ON LINE with the APEX disconnected, then another device is sharing the same address.

YES - Change one of the devices and retest

NO - Proceed to the step 7

7. Is the maximum number of remotes in the controller set to a number greater than the address of the APEX?

Run the system setup report from the controller or check the value under function 14. If the value is lower than the address of the APEX, the controller will not try to communicate with it.

YES - Change the maximum number of remotes and retest

NO - Contact Technical Support if the APEX is still not working.

Test Individual Devices, Card and Code Input

Use the following steps for troubleshooting keypads. Keep thorough notes during troubleshooting to compare against and to help find problems, prevent confusion, and save time if site service by a technician is required.

1 Try a code or card at the keypad controlling the gate. Ensure the code or card is one that works at that location and time. Try several codes to verify operation. Note which code(s) were used and the response at each device, as well as the response on the software event log.

2 Try the same code(s) or card(s) at other access devices on the property. Compare the result with the previous step. Try to narrow down whether multiple devices are affected or just one.

3 If only one device is not working, determine if the problem is in the device or the location. Make sure to allow for customer access, then remove the faulty device.
Switch the faulty device with a similar device that works and remember to switch addresses too.
If the problem remains in the same location, it is probably a wiring issue. Contact a service company to check the wiring.

4 Verify that all devices are receiving enough power. Create a voltage map of the site by sketching out the locations of every AI device on the site. Use a multimeter to take DC power readings at each device.
Note these readings on the sketch. Any device that is receiving less than 12V is underpowered and can cause the entire system to lock up.

Test multiple devices or entire site

Generally, multiple problems are a sign of wiring issues, either from bad splices, pinched or nicked wires, radio frequency interference, water in the conduit, or incorrect wire type.

To check the entire site for problems, use the following procedure:

Allow for customer access and open all device housings.

↓

Unplug the power and data terminal blocks on every AI device on the site.

↓

Once every device on the site is unplugged, add one device at a time back into the system.

↓

Allow the device to function for an hour and then add in the next device in line.

↓

Eventually, a device will be added that triggers the problem. Switch this device with one that has been previously added to verify if the problem exists in the location or in the device.

↓

If the problem remains in the same location, it is probably a wiring issue. Contact a service company to check the wiring.

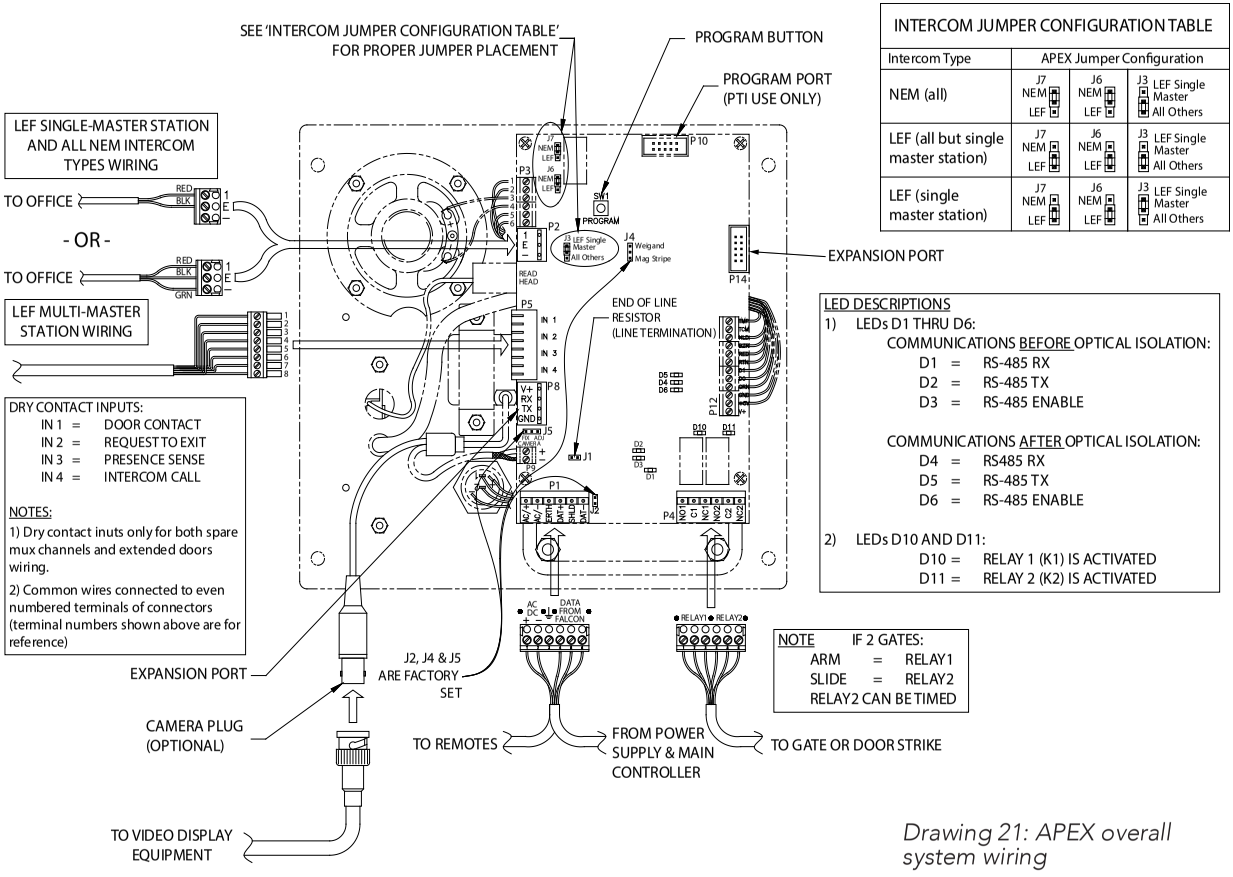

INTERCOM JUMPER CONFIGURATION TABLE			
Intercom Type	APEX Jumper Configuration		
NEM (all)	J7 NEM LEF	J6 NEM LEF	J3 LEF Single Master All Others
LEF (all but single master station)	J7 NEM LEF	J6 NEM LEF	J3 LEF Single Master All Others
LEF (single master station)	J7 NEM LEF	J6 NEM LEF	J3 LEF Single Master All Others

LED DESCRIPTIONS

1) LEDs D1 THRU D6:

COMMUNICATIONS BEFORE OPTICAL ISOLATION:

D1 = RS-485 RX
D2 = RS-485 TX
D3 = RS-485 ENABLE

COMMUNICATIONS AFTER OPTICAL ISOLATION:

D4 = RS485 RX
D5 = RS-485 TX
D6 = RS-485 ENABLE

2) LEDs D10 AND D11:

D10 = RELAY 1 (K1) IS ACTIVATED
D11 = RELAY 2 (K2) IS ACTIVATED

NOTE IF 2 GATES:
ARM = RELAY1
SLIDE = RELAY2
RELAY2 CAN BE TIMED

Drawing 21: APEX overall system wiring

Warranty & Disclaimer

PTI Security Systems warrants its products and equipment to conform to its own specifications and to be free from defects in materials and workmanship, under normal use and service, for a period of one year from the date of shipment. Within the warranty period, PTI Security Systems will repair or replace, at its option, all or any part of the warranted product which fails due to materials and/or workmanship. PTI Security Systems will not be responsible for the dismantling and/or re-installation charges. To utilize this warranty, the customer must be given a Return Materials Authorization (RMA) number by PTI Security Systems. The customer must pay all shipping costs for returning the product.

This warranty does not apply in cases of improper installation, misuse, failure to follow the installation and operating instructions, alteration, abuse, accident, tampering, natural events (lightning, flooding, storms, etc.), and repair by anyone other than PTI Security Systems.

This warranty is exclusive and in lieu of all other warranties, expressed or implied, including but not limited to the implied warranties of merchantability and fitness for a particular purpose. PTI Security Systems will not be liable to anyone for any consequential or incidental damages for breach of this warranty or any other warranties.

This warranty will not be modified or varied. PTI Security Systems does not authorize any person to act on its behalf to modify or vary this warranty. This warranty applies to PTI Security Systems products only. All other products, accessories, or attachments used in conjunction with our equipment, including batteries, will be covered solely by their own warranty, if any. PTI Security Systems will not be liable for any direct, incidental, or consequential damage or loss whatsoever, caused by the malfunction of product due to products, accessories, or attachments of other manufacturers, including batteries, used in conjunction with our products. This warranty does not cover the replacement of batteries that are used to power PTI Security Systems products.

The customer recognizes that a properly installed and maintained security system may only reduce the risk of events such as burglary, robbery, personal injury, and fire. It does not ensure or guarantee that there will be no death, personal damage, and/or damage to property as a result. PTI Security Systems does not claim that the Product may not be compromised and/or circumvented, or that the Product will prevent any death, personal and/or bodily injury and/or damage to property resulting from burglary, robbery, fire, or otherwise, or that the Product will in all cases provide adequate warning or protection.

PTI Security Systems products should only be installed by qualified installers. The customer is responsible for verifying the qualifications of the selected installer.

PTI Security Systems shall have no liability for any death, injury, or damage, however incurred, based on a claim that PTI Security Systems Products failed to function. However, if PTI Security Systems is held liable, directly or indirectly, for any loss or damage arising under this limited warranty or otherwise, PTI Security Systems's maximum liability will not in any case exceed the purchase price of the

Product, which will be fixed as liquidated damages and not as a penalty, and will be the complete and exclusive remedy against PTI Security Systems

Warning: The User should follow all installation, operation, and maintenance instructions. The User is strongly advised to conduct Product and systems test at least once each week. Changes in environmental conditions, electric or electronic disruptions, and tampering may cause the Product to not perform as expected.

Warning: PTI Security Systems warrants its Product to the User. The User is responsible for exercising all due prudence and taking necessary precautions for the safety and protection of lives and property wherever PTI Security Systems Products are installed. PTI Security Systems does not authorize the use of its Products in applications affecting life safety.

Notice. Some PTI Security Systems products use 900Mhz wireless technology. Other devices at the site such as cordless telephones or alarm components may cause interference that will disrupt the operation of the system or may be interfered with by the system. PTI Security Systems assumes no liability for any problems caused by interference. It is the sole responsibility of the user to identify and correct such problems.

PTI SECURITY SYSTEMS

SECURITY ACCESS CONTROL VIDEO

For Technical Support, Please Visit:

tickets.ptisecurity.com

114A3863-F July 2019