INSTALLATION AND OWNER'S MANUAL

GATE STAR 4000

Model GS4000 - Heavy Duty Commercial Vehicular Swing Gate Operator

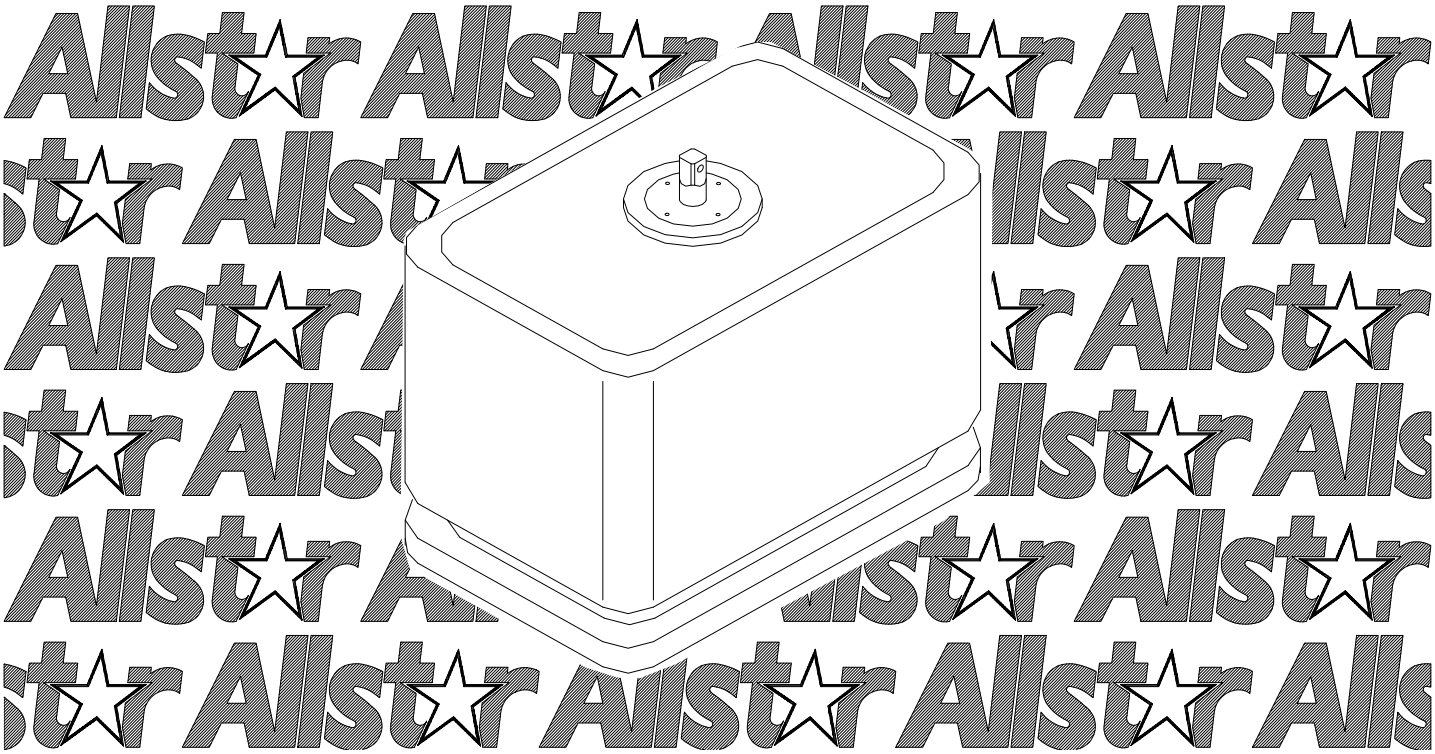

104950

c UL US
LISTED

New - Allstar's CGA2K™ TECHNOLOGY!
Meets all March 1, 2000 UL325 requirements.

Serial #:	
Date Installed:	
Your Dealer:	

As of date of manufacture, meets all ANSI/UL 325 Safety Requirements for Vehicular gate operators

READ THIS MANUAL CAREFULLY BEFORE INSTALLATION OR USE

SAVE THESE INSTRUCTIONS

TABLE OF CONTENTS

Pre-Installation Notes 3
Operator Class Designation 3
Section A: Gate System Design/Installation 4
Section B: Preparing the Site 6
The Concrete Operator Pad 6
Placing the Vehicle Detector Loops 6
Electrical Power Requirements 8
Section C: Installing the Operator 9
Placing the Mechanical Unit 10
Installing the Arm 10
Installing the Control Box 11
Electrical Hookup 11
Schematic and Wiring Diagram 11
Wiring the Mechanical Unit and Control Box 12
Bi-Parting Wiring Diagrams 13
Accessory Equipment Hookup 13,15,16
Pre-Setting the Motor Overload Sensitivity 17
Terminal Strip Reference Chart ..... 17 - 19
Section D: Starting the Operator 19
Setting the Limit Switches 19
Setting the Switch Selectable Options 19
No Load Test Mode 19
Applying Power 20
Indicator Lamps 20
Maximum Run Timer 22
Final Settings 22
Section E: Auxiliary Equipment 23
Section F: End User Instructions 24
Safety Guide for the End User 24
Operational Guide for the End User 25
Operator Exploded View & Parts List ..... 26 & 27
Technical Specifications 28

WARNING HIGH VOLTAGE

ONLY A QUALIFIED TECHNICIAN SHOULD SERVICE THIS GATE OPERATOR

PERIODICALLY TEST SENSITIVITY OF OVERLOAD
***** READ MANUAL *****

LOG DATE OVERLOAD TEST				DATES SERVICED
DATE TESTED	DATE TESTED	DATE TESTED	DATE TESTED	

Figure 1: Test Log

READ THESE STATEMENTS CAREFULLY AND FOLLOW THE INSTRUCTIONS CLOSELY.

The Warning and Caution boxes throughout this manual are there to protect you and your equipment. Pay close attention to these boxes as you follow the manual.

WARNING	CAUTION	WARNING	CAUTION
Indicates a MECHANICAL hazard of INJURY OR DEATH. Gives instructions to avoid the hazard.	Indicates a MECHANICAL hazard of DAMAGE to your gate, gate operator, or equipment. Gives instructions to avoid the hazard.	Indicates an ELECTRICAL hazard of INJURY OR DEATH. Gives instructions to avoid the hazard.	Indicates an ELECTRICAL hazard of DAMAGE to your gate, gate operator, or equipment. Gives instructions to avoid the hazard.

PRE-INSTALLATION NOTES

The Allstar Gate Star 4000 (GS4000) Vehicular Gate Operator will provide convenience and assurance to the ultimate users for many years. It is ruggedly built of the finest materials and has been thoroughly inspected and tested at the Allstar factory. It has many features that will aid in the installation and testing of the complete gate system. The GS4000 is certified to comply with UL Standard for Safety 325, as revised March 1, 2000. (115 Volt version only.)

NOTICE - BEFORE ATTEMPTING INSTALLATION, READ THIS MANUAL CAREFULLY SO YOU WILL BE THOROUGHLY FAMILIAR WITH THE FEATURES OF THE GS4000 AND ITS PROPER INSTALLATION PROCEDURES.

The GS4000 Vehicular Swing Gate Operator is designated a Class I Residential Vehicular Swing Gate Operator, and is intended to operate a vehicular swing gate installed on a residential home, maximum of four single families in the dwelling, or a garage or parking area associated with that home. The GS4000 vehicular gate operator is also designated Class II (Commercial location or multi-family home); III (industrial location not intended to service the general public); and IV (secure or restricted access locations, ie. airports and prisons). The GS4000 may be used in any Class location.

Because the Allstar GS4000 (as well as gate operators sold by other manufactures) is designed to start and move gates weighing as much as 1000 pounds,---the Allstar GS4000 is capable of producing high levels of force. It is important in the design of the total gate system that designers, installers and users be aware of the hazards that may be associated with the **IMPROPER** design, installation and use of Vehicular Gate systems and Gate Operators.

The gate operator is only one part of a complete automatic gate operating system. As each location and usage is different, a properly designed system will include all applicable safety devices.

The GS4000 CGA2K™ Technology provides several features that can help reduce the hazards of your gate system.

Built-In Overload Detector Sensing System

The Allstar GS4000 has a built-in "overload detector" that can help reduce the hazards of your gate system. This device, however, must not be considered as the primary defense system. Consider all available options (electric leading edges, photoelectric sensors, protective screen mesh, etc) to eliminate hazards in your gate system design.

The Allstar GS4000 built-in overload detector will activate if there is an abrupt increase in motor current above that normally required to move the gate. The overload detection point is an adjustable setting that must be determined at the time of installation. This setting must be tested periodically to ensure proper operation. Diligent maintenance of the gate hinges and hardware will assure the most responsive operation of the overload detector. See pages 17 & 23.

ADVISE THE PURCHASER TO CHECK THE SENSITIVITY OF THE OVERLOAD PERIODICALLY AND, AFTER REMOVING THE CONTROL BOX COVER, LOG THE DATE TESTED ON THE LOG LOCATED ON PAGE TWO OF THIS MANUAL (See Figure 1, pg. 2.)

The GS4000 is also provided with a Torque Limiter that may be adjusted to "slip" when an obstruction is encountered. However, the purpose of the Torque Limiter is to protect the GS4000 mechanical parts. Whether the overload is activated before the Torque Limiter slips will depend upon the "tightness" of the adjustment of the Torque Limiter. This adjustment will be explained in the final check out of the GS4000.

Connections for External Entrapment Prevention Sensors

Because all gate system installations are different, the GS4000 control panel provides independent connections for Open and Close non-contact (photoelectric) and contact (edge) sensors. In this way a photoelectric sensor could be utilized to guard the gate area when closing and an edge sensor would provide the protection when opening. Depending on the particular application a combination contact and non-contact sensor protection system for the open and close directions may provide more effective entrapment protection than a single device for both directions. See pages 4, 5, 13, 18, 24, and 25.

NOTICE - THE IMPORTANT SAFEGUARDS AND INSTRUCTIONS IN THIS MANUAL CANNOT COVER ALL POSSIBLE CONDITIONS AND SITUATIONS WHICH MAY OCCUR DURING ITS USE. IT MUST BE UNDERSTOOD THAT COMMON SENSE AND CAUTION MUST BE EXERCISED BY THE PERSON(S) INSTALLING, MAINTAINING AND OPERATING THE EQUIPMENT DESCRIBED HEREIN. DO NOT USE THIS EQUIPMENT FOR ANY OTHER THAN ITS INTENDED PURPOSE — OPERATING A SWING GATE.

Audio Alarm and AlarmAble™ Open/Close Push Button Enable-on-Alarm Only (Patent No. 6,611,205)

The GS4000 has an audio alarm that sounds when a second occurrence of the built-in overload activation is registered before an end limit (open or close) is reached. The alarm continues to sound warning until a fixed wire input is activated or five (5) minutes pass. As with the built-in overload detector, Diligent maintenance of the gate hinges and hardware will avoid nuisance operation of the overload detector and thereby avoid nuisance operation of the audio alarm. Allstar's patented AlarmAble™ Open/Close Push Button Enable-on-Alarm Only feature can be set to provide a secure control station that will be functional in an emergency situation. See pages 18, 19, 24, and 25.

SMART™ Self Adjusting MAximum Run Timer

The GS4000 has a **S**elf adjusting **MA**ximum **R**un **T**imer, SMART™. The amount of time for the first few cycles of operation are registered and averaged within the motor controller circuitry. After the first few initial cycles, if the gate is activated and no other command is given or an end limit (open or close) is not reached in the previously counted cycle time plus approximately 4 seconds, the operator will be turned off. See page 22.

OTHER FEATURES

Auto Close Timer: Adjustable from 2 to 60 seconds, provides an automatic closure of the gate from the full open position. See page 19.

Timer Re-close On/Off Switch: Enables an automatic closure of the gate from a partially closed position if the close movement was initiated by the Auto Close Timer and the close cycle was interrupted by a non-contact (photoelectric) sensor input. See page 20.

Diagnostic LEDs on the Motor Controller Board: Provides a visual indication of the status of the gate system operation. See page 20.

A: GATE SYSTEM DESIGN/ INSTALLATION

WARNING!

TO REDUCE THE RISK OF SEVERE INJURY OR DEATH: READ AND FOLLOW ALL INSTALLATION INSTRUCTIONS AND GATE SYSTEM DESIGN PARAMETERS!

GATE SYSTEM DESIGN AND INSTALLATION SAFETY CHECK LIST:

- The GS4000 operator may be installed on a Class I, II, III, or IV Vehicular Swing Gate. See page 3 for an explanation of the different Class locations. See the last page of this manual for the operator specifications (voltage, maximum gate weight & length etc.).
- Make sure that the gate moves freely, all hinges are in good working order, the gate does not bind in any manner and the gate swing area is clean and free of irregularities. DO NOT INSTALL THE OPERATOR UNTIL ALL GATE PROBLEMS HAVE BEEN CORRECTED.
- Do not increase the built-in overload detector adjustment or overtighten the torque limiter to compensate for a poorly working gate. A well maintained gate will ensure easy manual operation (if needed) and maximum operator obstruction sensitivity.
- Install the operator on the inside of the property/fence line. DO NOT install an operator on the public side of the fence line or gate. Outward swinging gates should not open into public areas.
- The gate must be installed in a location so that enough clearance is supplied between the gate and any adjacent structures when opening and closing to reduce the risk of entrapment.
- Make sure the gate operating system is placed far enough back from the road to eliminate traffic backup. The distance from the road, size of the gate, usage level and gate cycle/speed must be taken into consideration to eliminate potential hazards.

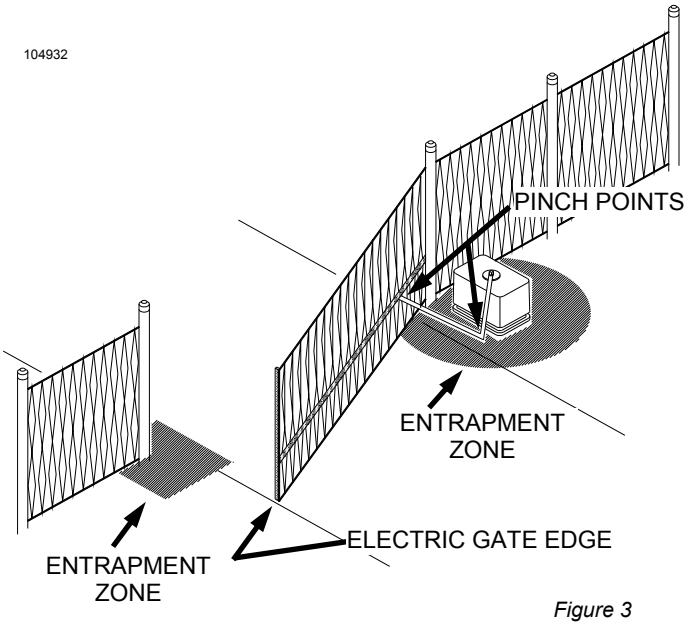

Figure 3

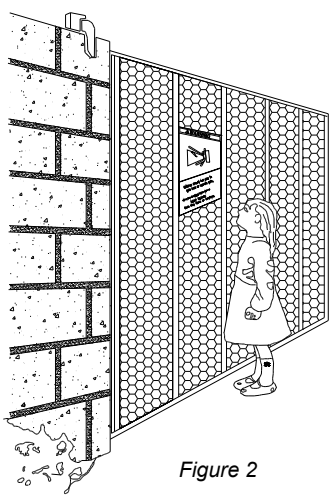

Figure 2

- For ORNAMENTAL "GRILL TYPE" GATES (or any other type of open gate where a handhold or toehold may be achieved), injuries may occur when people put arms through the openings or children "ride" the gate by standing on the bars and holding on to the gate. THIS POTENTIAL HAZARD CAN BE MINIMIZED BY INSTALLING A MESH SCREEN ON THE GATE. Allstar strongly recommends the entire gate and adjacent fence area the gate covers when open be meshed or guarded such that a handhold or toehold cannot be achieved. See Figure 2.
- All Allstar gate operators are VEHICULAR GATE OPERATORS and as such are NOT RECOMMENDED FOR PEDESTRIAN traffic. In installations where pedestrians are likely to be nearby, install a pedestrian gate and use leading edge detectors and/or photocells in your design to protect system entrapment zones. Allstar can provide these products for incorporation in your design.
- Use the illustration at left (Figure 3) to minimize the risk of injury in your design of the swing gate operator system. IDENTIFY THE ENTRAPMENT ZONES AND PINCH POINT AREAS IN YOUR GATE. Design the gate installation to minimize the risk of entrapment in these areas. Install additional safety equipment such as four wire edges and photocells to further minimize risk. All entrapment zones are required to be protected.
- **Entrapment Zones:** Design in personal entrapment protection devices to protect people from entrapment in the zones shown in Figure 3 at left.
- **Pinch Points:** Use protective measures (guards, padded edges, etc.) to protect people from the pinch points shown in Figure 3 at left.
- SWING GATES HAVE THE POTENTIAL HAZARD OF HANDS AND FINGERS BEING PINCHED between the gate

edge and the post to which the gate is mounted. It is recommended that the hinges be mounted so that this opening increases as the gate swings open. **PROTECT THIS "PINCH POINT" SO THIS HAZARD IS AVERTED.** See Figure 3.

- CONSIDER ALL OTHER "PINCH POINTS" IN YOUR DESIGN of the gate system. Observe the arm as it opens and the two arm pieces swing past each other. Use protective measures to reduce hazards at this location. Restrict access to the arm motion. See Figure 3.
- DO NOT consider the built-in overload detector as the primary defense system. Consider all options in the gate system design.
- DO NOT connect any auxiliary equipment to the GS4000 (detectors, card readers, etc.) until the gate operator and all its functions are fully tested. Only connect one device at a time and ensure its proper function(s) before moving on to the next device.
- DO NOT locate any control device (key switch, switch, key pad, card reader, etc.) in a position where it may be activated by a person reaching through the gate or while touching the gate in any manner. Locate all control devices a minimum of 10 feet from the gate when opened or closed.
- Outdoor or easily accessible controls must be of the security type to prevent unauthorized use of the system.
- Install all devices that will open or close the gate in such a manner that THE GATE WILL BE IN FULL VIEW WHEN THE DEVICE IS OPERATED.
- Before activating the "timer to close" option of the GS4000, ENSURE THE PERSONAL ENTRAPMENT PROTECTION DEVICES (operator reversing feature, edges, photocells) ARE OPERATING and install VEHICLE DETECTOR LOOPS AND VEHICLE DETECTORS for protection of user vehicles. Read the manual for information on the installation of these devices. IF VEHICLE DETECTOR LOOPS HAVE BEEN INSTALLED TO PREVENT THE GATE FROM CLOSING ON A VEHICLE, INSTRUCT THE USER TO PERIODICALLY CHECK THE OPERATION OF THE DETECTORS.
- USE EXTREME CAUTION WHEN WORKING NEAR THE BELTS AND PULLEYS when the operator cover is removed. Apply power to the operator only when instructed to do so.
- When the GS4000 Control Box cover is removed, high voltage will be exposed. EVEN IF THE RED POWER LIGHT IS NOT LIGHTED, HIGH VOLTAGE AC MAY STILL BE PRESENT ON TERMINALS L1 AND L2. NEVER LEAVE THE INSTALLATION WITH THE CONTROL BOX COVER REMOVED.
- ALWAYS TURN OFF THE POWER BEFORE ATTEMPTING SERVICE OF EITHER THE ELECTRICAL OR MECHANICAL SYSTEMS.
- SECURELY ATTACH THE WARNING SIGNS provided with the GS4000 on the gate (one on the outside and one on the inside) where they can be seen by persons in the area of the gate to alert them of automatic gate operation. (If the user refuses to have the warning signs installed, Allstar recommends that you note this on your records and have the user sign a disclaimer.) See Figure 4.

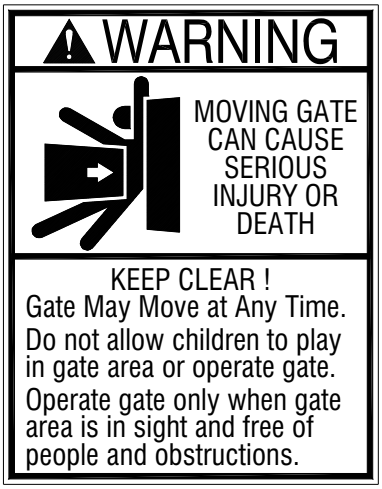

104880

Figure 4

AS THE INSTALLER YOU ARE RESPONSIBLE FOR:

1. **ASSURING THAT THE OWNER/END USER OF THE SYSTEM UNDERSTANDS ITS BASIC OPERATION AND SAFETY FEATURES. IN PARTICULAR, BE SURE THE OWNER/END USER UNDERSTANDS THE LOCATION AND OPERATION OF A MANUAL DISCONNECT (WHERE PROVIDED) OR HOW TO OPERATE THE GATE M**
2. **YOU ALSO HAVE THE PRIMARY RESPONSIBILITY OF INSURING THAT ALL POSSIBLE OPERATIONAL HAZARDS HAVE BEEN CONSIDERED AND ELIMINATED. YOU MUST ADVISE AND WARN THE PURCHASER AND THE ULTIMATE USER OF ANY HAZARDS THAT YOU HAVE NOT BEEN ABLE TO ELIMINATE.**
3. **POINTING OUT TO THE OWNER/END USER OF THE GATE SYSTEM THAT CHILDREN OR PETS ARE NOT ALLOWED TO PLAY ON OR NEAR THE GATE, FENCE OR ANY PART OF THE SYSTEM, AND THAT THE SAFETY INSTRUCTIONS SUPPLIED WITH THIS OPERATOR AND THEIR IMPLEMENTATION ARE THE RESPONSIBILITY OF THE OWNER/END USER.**
4. **LEAVING THE INSTALLATION AND MAINTENANCE MANUAL FOR THIS OPERATOR AS WELL AS ANY ADDITIONAL SAFETY INFORMATION SUPPLIED WITH THIS OPERATOR OR OTHER COMPONENTS OF THE GATE SYSTEM WITH THE OWNER/END USER.**
5. **NOT PLACING IN SERVICE THIS OPERATOR IF YOU HAVE ANY QUESTIONS ABOUT THE SAFETY OF THE GATE OPERATING SYSTEM. CONSULT THE OPERATOR MANUFACTURER.**

B: PREPARING THE SITE

THE CONCRETE PAD

The standard GS4000 is designed to operate a single leaf gate. The control box and mechanical units are separate devices. It is necessary to find a suitable location to mount the control box, i.e., post or wall. Separate low voltage and high voltage conduits will be run between the control box and mechanical unit. (See Figure 8.)

To properly install a bi-parting gate system, it is necessary to add one additional mechanical unit to the design. The control box will operate two mechanical units. It is necessary to run an additional low voltage and high voltage conduit between the two mechanical units. (See Figure 8.)

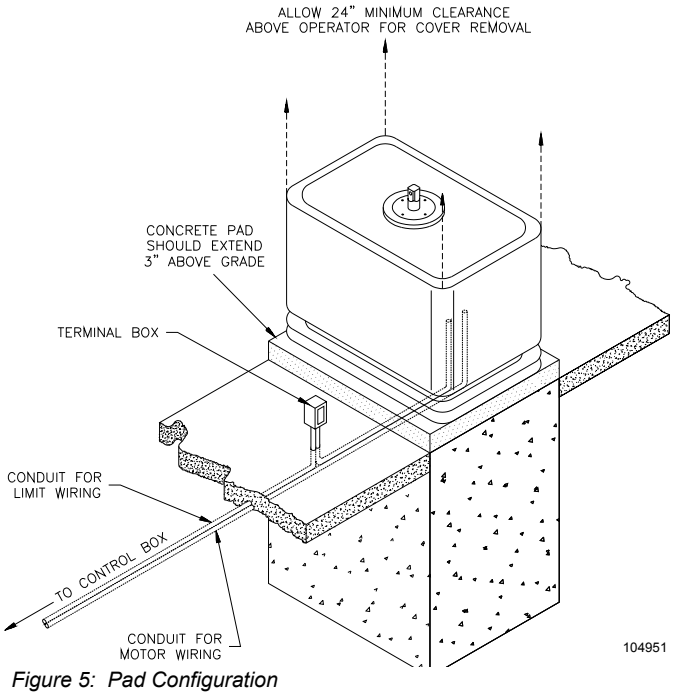

Figure 5: Pad Configuration

The Installation of the GS4000 MECHANICAL UNIT will require a suitable concrete pad as a mounting base. The dimensions of the concrete pad should be sufficient to allow at least 3" of clearance from each edge of the pad to the nearest operator mounting hole. The top of the pad should be at least 3" above grade to raise the operator above any standing water. The depth of the pad below grade is dependent on the weight and size of the gate and the soil conditions at the site of the installation. ALWAYS FOLLOW LOCAL BUILDING CODES.

If no suitable concrete base exists, a pad must be poured. See Figure 6 for plans for this pad. If the location of the operator is such that vehicles have the potential of hitting the operator, consideration should be given to installation of protective posts in front of the operator.

If a suitable concrete base already exists for mounting the operator it will be necessary only to drill mounting holes for the GS4000 MECHANICAL UNIT. 3/4" mounting holes are located on the front and rear of the MECHANICAL UNIT. The bolt pattern is shown in Figure 6. The mounting bolts should be 1/2" diameter or larger. "Red head" or wedge anchor concrete bolts are usually satisfactory.

If mounting anchor bolts are to be installed prior to pouring the pad, pay particular attention to the bolt pattern and the location of the mounting holes with respect to the center line of the gate post. It is critical for the proper operation of the Arm that the center line of the shaft of the GS4000 MECHANICAL UNIT be located exactly as shown on the bolt pattern drawing, Figure 6.

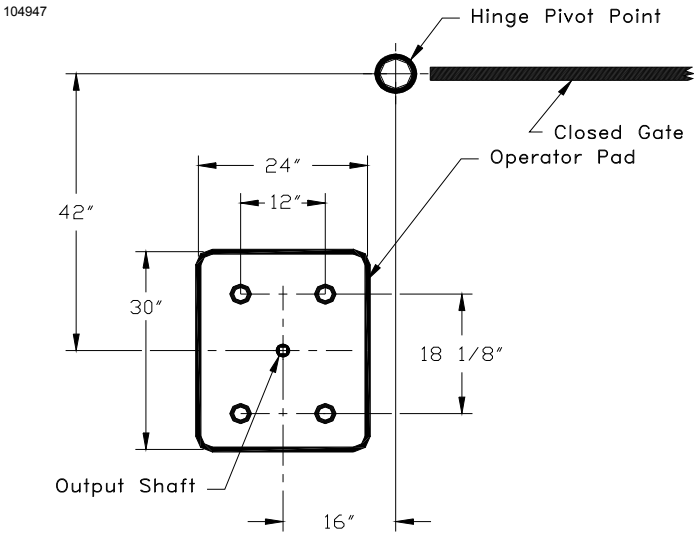

Figure 6: Operator Footprint

PLACING THE VEHICLE DETECTOR LOOPS

If Vehicle Detectors are to be used with the GS4000, the "Loops" to be buried in the drive should be installed during the site preparation phase of the installation. Proper placement of the Vehicle Detector wire loops is critical if the loops are to provide satisfactory, extended service. THE MOST IMPORTANT CONSIDERATIONS ARE: 1) PROPER WIRE TYPE AND, 2) GOOD, TIGHT CONNECTIONS FROM THE LOOP TO THE LOOP TERMINATING CONNECTOR. **The termination of the loop wires will be at the Vehicle Detector itself, not on the GS4000 terminal board**. Observe the wiring diagram supplied with the Vehicle Detector Manufacturer. The Vehicle Detector may be mounted in the GS4000 MECHANICAL UNIT. The AC power delivered to the MECHANICAL UNIT by the GS4000 Control Box will **NOT** be satisfactory for the Vehicle Detector. A separate A/C service must be provided for the Vehicle Detector.

Two different types of Loop Installations will usually be encountered when placing the loops in the drive: 1) If the driveway material is already in place. saw cuts will be needed in which to place the loop wire. 2) For loops where the paving material will be installed after the loop is positioned, it is necessary that the loops be placed in Schedule 40 PVC pipe to maintain uniform loop spacing with respect to the surface of the pavement. The loop should be placed 1.5" below the surface of the pavement and at least 2" above any reinforcing steel. The lead-in wires need not be in PVC, but must have a least six (6) twists per running foot.

THE LOOP WIRES MUST BE CONTINUOUS. NO SPLICES OR CONNECTIONS IN THE LOOP ARE TO BE PERMITTED BELOW GROUND. THE ONLY CONNECTION WILL BE AT THE

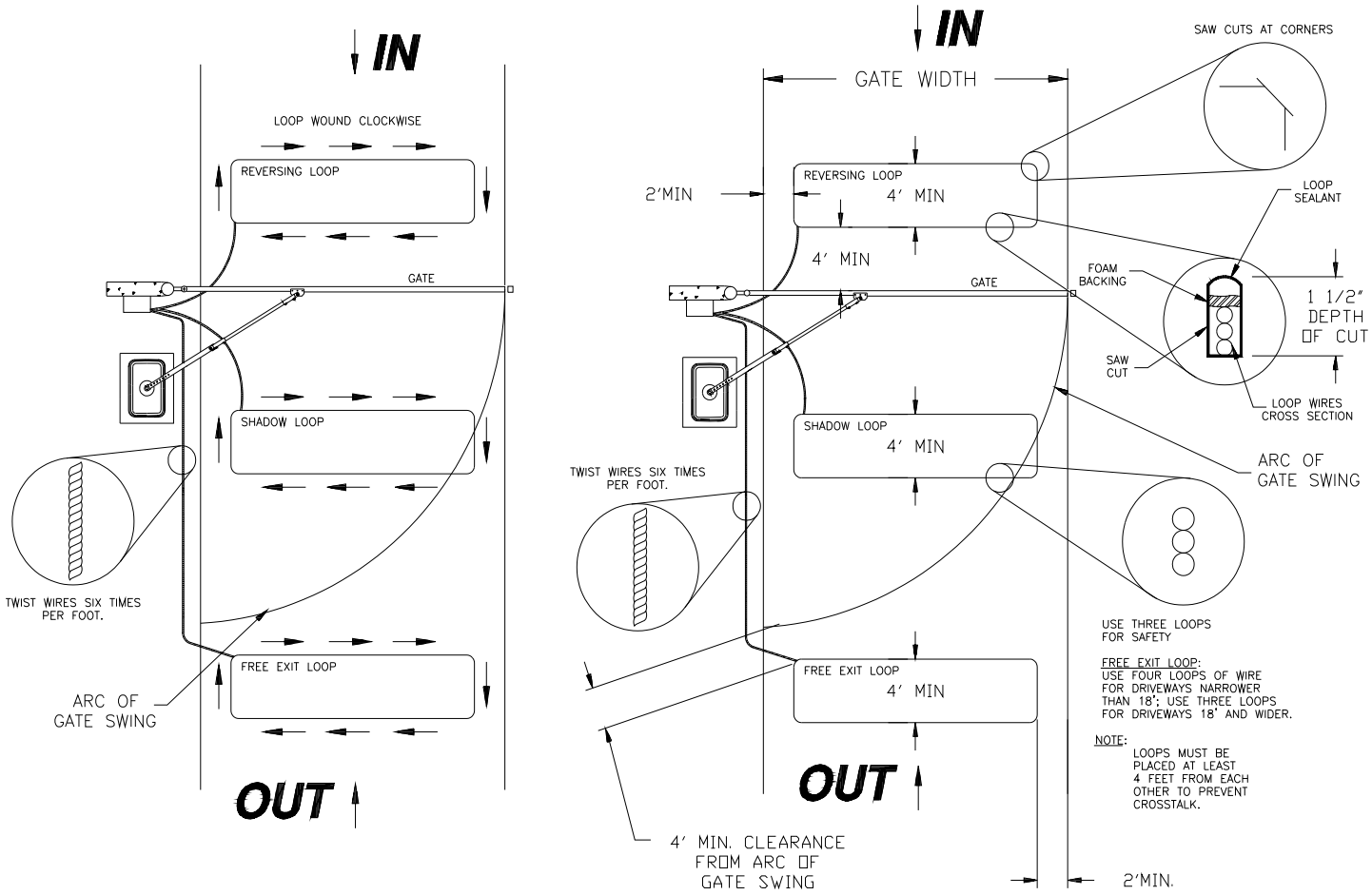

Figure 7: Loop Diagrams

TERMINATION OF THE WIRE AT THE VEHICLE DETECTOR. Above ground splices may be used providing the wire is twisted, soldered and moisture sealed. For best long term results, do not use wire nuts anywhere in the loop system. Connect to the Vehicle Detector harness by soldering.

For saw-cut installations, observe the methods recommended in Figure 7, above. The saw-cut must be to a depth of 1.5", clean and with no sharp corners. After placing the wires, it is essential that the wires be held tightly in place by a foam backing prior to pouring the sealant. THIS IS ESPECIALLY IMPORTANT WHEN FREEZING IS LIKELY. No voids should exist that will permit the collection of water that might freeze and push the loop wires out of the slot. The sealant used should not be hard setting and should be suitable for pavement material.

THE WIRE USED FOR THE LOOPS MUST BE HEAT AND WATER RESISTANT, CROSS-LINK POLYETHYLENE INSULATED. TYPE XLPE IS BEST. RHW IS O.K. DO NOT USE ANY PVC INSULATED WIRE. (PVC insulation will absorb moisture that may affect Detector operation.) WIRE SIZE SHOULD BE #16 GA. STRANDED OR LARGER.

VEHICLE DETECTOR LOOP BLANKING FOR SWING GATES

The inside loop for a swing gate installation must be located at least 4 feet outside of the arc of the gate. If it is not, the Vehicle Detector may detect the gate as it moves over the loop and cause the Gate to reopen. If the gate is large and a single leaf, the arc usually requires that the loop be a considerable distance from the closed gate position. This may not be an effective position for the loop. In this case, a "blanking" or "shadow" loop may be used.

When a Shadow Loop is necessary, connect the output of the loop detector to terminal #9 "Shadow Loop" and terminal #16 "Common". The GS4000 circuitry will recognize a vehicle on the loop and prevent the gate from closing while the vehicle is over the Shadow Loop. When the gate is closing or opening, the GS4000 circuitry will ignore input from this loop as the gate swings over it.

B: PREPARING THE SITE

ELECTRICAL POWER REQUIREMENTS

The GS4000 can be ordered for 115 Volts AC (VAC) or 230 VAC operation. The AWG wire size for the electrical service depends on the distance of the operator from the breaker panel. Refer to Table 1 to determine the correct wire size.

110112

AC POWER SOURCE TYPICAL CONNECTIONS

SINGLE GATE	
WIRE SIZE	DISTANCE
#14	100 FT
#12	150 FT
#10	250 FT
#8	400 FT
#6	600 FT

DOUBLE GATE	
WIRE SIZE	DISTANCE
#14	50 FT
#12	75 FT
#10	125 FT
#8	200 FT
#6	300 FT

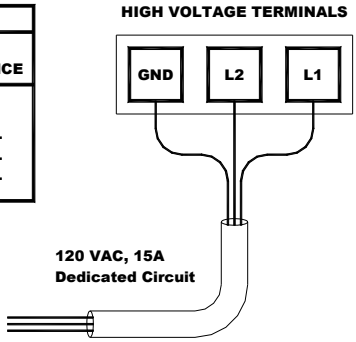

NOTE: DISTANCE IS TOTAL LENGTH OF WIRE FROM CIRCUIT BREAKER IN THE MAIN PANEL TO THE GATE OPERATOR.

Table 1

The DISTANCE column is the ideal distance from the breaker panel to the operator for a given wire size and voltage.

NOTE! FOR A BI-PARTING INSTALLATION, THERE WILL BE TWO MECHANICAL UNITS OPERATING AT THE SAME TIME. IT WILL BE NECESSARY TO REDUCE THE LENGTHS IN TABLE 1 BY A FACTOR OF TWO.

Class 2 low voltage wiring from external controls such as a key pad, card reader, telephone entry device, etc. must be brought to the GS4000 CONTROL BOX by a separate conduit from the 115 VAC electrical hook up conduit. Low voltage control wires MUST NEVER be routed in the same conduit as the HIGH VOLTAGE power wires.

Note! The limit switch wires from the GS4000 CONTROL BOX to the GS4000 MECHANICAL UNIT ARE LOW VOLTAGE WIRES AND MUST BE ROUTED IN A LOW VOLTAGE CONDUIT TO THE CONTROL BOX.

WARNING!

AVOID ELECTROCUTION:
DO NOT ROUTE LOW VOLTAGE WIRES IN SAME CONDUIT AS HIGH VOLTAGE WIRES. FOLLOW ALL LOCAL ELECTRICAL CODES OR THE NATIONAL ELECTRICAL CODE.

OTHER VOLTAGES AND 3 PHASE SYSTEMS.

The GS4000 can operate at other voltages or on three (3) phase systems. To operate at 440 VAC it will be necessary to install an external step down transformer. The transformer should be located in a separate electrical box and protected by suitable circuit breaker and/or fusing. A 440 Volt rated switch should also be installed. Follow local electrical codes or the National Electrical Code. The transformer selected should be UL LISTED and be rated for a minimum 700 Volt-Amperes (Watts).

IF TWO MECHANICAL UNITS ARE TO BE USED FOR A BI-PARTING GATE SYSTEM, THEN A 1000 VOLT-AMPERE/ WATT TRANSFORMER MUST BE USED.

Operating from a three (3) phase line will require the use of a 230 VAC rated GS4000. The GS4000 may be operated from a 230 Volt "Delta" line or a 120/208 "Y" line. In either case, ONLY one "leg" of the three phase line will be used. The unbalance of the line will be minimal since the full rate current of the GS4000 at 220 VAC is only 2.2 amperes. (4.4 Amperes for a bi-parting system.) Connect any two wires of the three phase system to the 230 VAC GS4000 Tape the third wire carefully so that it does not short to any other object. (The "Y" system will have 4 wires, one of which will be the "common". Make sure the common is NOT selected as one of the wires connected to the GS4000.) It is always best to also pull a ground wire from the electrical service box to the GS4000 to ensure the frame is securely affixed to GROUND.

SERVICE CONDUIT

For new installations the conduit for the High Voltage may be brought to a junction box near where the GS4000 CONTROL BOX will be located or it may be brought directly to the Control Box.

104952

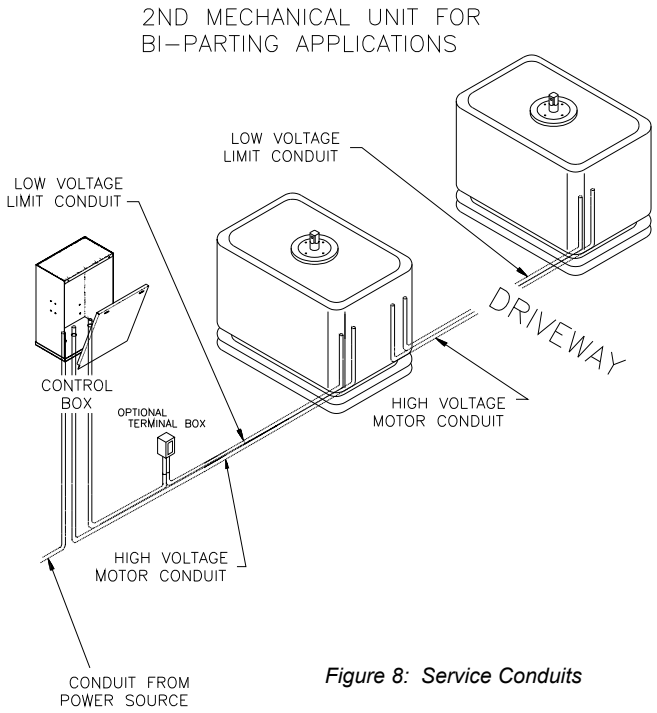

Figure 8: Service Conduits

TOOLS REQUIRED

The following tools and materials are required for a proper installation of the GS4000.

1. Wire cutter, stripper and crimping tools. (For attaching accessory equipment to the control box barrier strip.)

2. A #2 Phillips Head screw driver for removing the screws to the High Voltage cover.

3. Medium standard straight blade screw driver for the terminal strip screws.

4. Very small blade screwdriver. (For adjusting the potentiometer on the Logic and Power board.)

5. Electric arc welder or an electric drill with a 3/8" bit. (For attaching Arm Bracket to the Gate.)

6. Several feet of #18 or #22 gauge insulated multistrand wire. (For connecting accessory equipment to the control box terminal strip, and for limit switch control wires.)

7. Four 1/2" diameter concrete "redhead" bolts with hex nuts, flat washers and lock washers. (For attaching the GS4000 to the concrete pad.) (Not Included)

8. Concrete drill and bit. (To drill mounting holes for concrete bolts.)

9. Multimeter. (To test line voltage and other measurements as necessary.)

10. Small level. (To level GS4000 at installation.)

11. Torque Wrench and 1-5/8” Socket

UNPACKING CHECKLIST

The GS4000 as shipped consists of the components listed below.

Mechanical Unit

Electrical Unit

Wood Pallet with 4 lag bolts

Instruction Kit
Instruction Manual
Warning signs

Swing Arm Kit
Swing Arm
Crank Arm
Crank Arm Extension
Swing Gate Fittings
Swing Arm Bracket
Swing Arm Padlock with keys
Hardware Package

C: INSTALLING THE OPERATOR

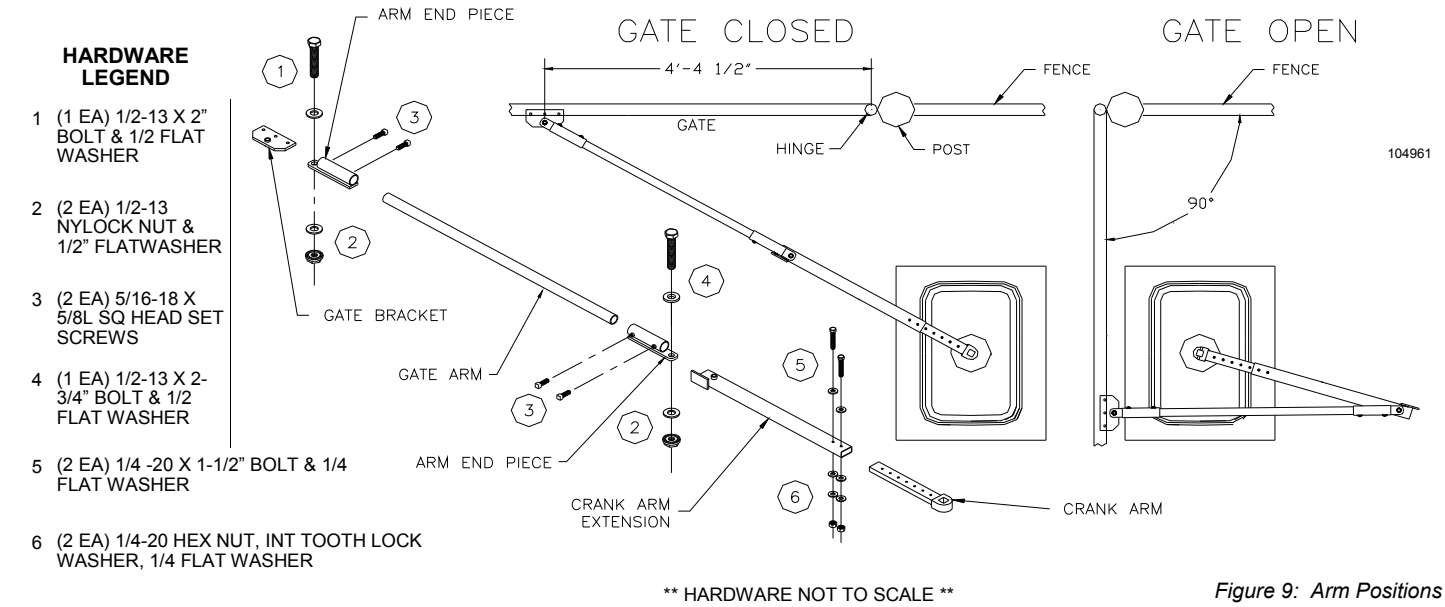

Figure 9: Arm Positions

PLACING THE GS4000 MECHANICAL UNIT

Remove the rain seal from the shaft of the GS4000. SAVE IT! The rain seal will be used later. Next, remove the cover from the GS4000 MECHANICAL UNIT by removing the 1/4 inch diameter bolts on each side of the Unit and set it aside. It is one of the last items that will be replaced at the completion of the installation.

The recommended procedure for attaching the GS4000 MECHANICAL UNIT to the concrete pad (for those installations where the anchor bolts were not previously installed) is first to locate and drill the hole for the mounting hole nearest to the gate post. Locate this hole by referring to the diagram in Figure 6. After placing a bolt in the hole, mark and drill the remaining three holes. This can be accomplished with the operator in place.

Before inserting the concrete bolts, make sure the GS4000 MECHANICAL UNIT is level. If any corners of the GS4000 are resting above the pad, flat washers may be inserted under the MECHANICAL UNIT. Place the flat washers, lock washers and nuts on the concrete bolts and tighten securely.

For previously placed anchor bolts, the procedure is the same except that the bolts will already be in place. If 1/2" diameter anchor bolts were set, the 3/4" mounting holes on the GS4000 MECHANICAL UNIT will allow some adjustment for desired alignment. Washers can be used under the GS4000 MECHANICAL UNIT to accurately level the unit as above.

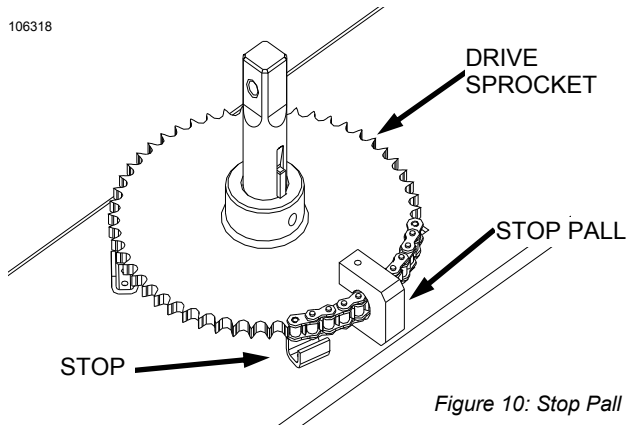

Figure 10: Stop Pall

TO REVIEW: Make sure the correct position of the GS4000 MECHANICAL UNIT from the center line of the gate hinge pivot point to the center line of the GS4000 is in accordance with the drawing of Figure 6.

INSTALLING THE GS4000 ARM

Temporarily locate the Gate Bracket on the Gate with C-clamps or by tack welding. Install the gate bracket to the gate so the gate arm will be level when connected to the GS4000. See Figure 9 for positioning of the Gate Bracket.

Loosen the adjustment nut of the Torque Limiter located on the top of the Gear Box on the GS4000 MECHANICAL UNIT with the 1-5/8 hex socket. This is done by removing the small set screw on the large nut and loosening the nut.

For the installation shown in Figure 9, attach the Crank Arm Extension to the Crank Arm with the (2) 1/4-20 x 1-1/2" long bolts provided. The overall length of the cranking arm is now 33 5/8" from the center of the Output Shaft to the center of the pivot at the "elbow." Note that the cranking arm is adjustable to (5) possible settings: 32-1/8", 30-5/8", 29-1/8", 27-5/8" and 26-1/8" long.

Install the Crank Arm and Extension on the GS4000 main shaft and make sure the Crank Arm swings freely from side to side. Connect the Gate Arm to the Crank Arm Extension and the Gate Bracket. With the Gate in the closed position, the "elbow" will be up against the closed position stop on the Crank Arm Extension. The Gate should be in the properly closed position. (See Figure 9.)

Loosen the Stop Pall on the large output drive sprocket located on the output shaft on the GS4000 MECHANICAL UNIT. (See Figure 10.) Move the Gate to the fully open, 90 degree position. The Arm extension should fold back over the arm as shown in Figure 9. If it doesn't, some adjustment of the gate bracket or operator position may be necessary. With the gate in the fully open position, adjust the stop pall on the sprocket against the stop on the GS4000 frame and tighten the set screw. Open and close the gate several times until you are satisfied that the arm position is correct. Finish welding or bolting the Gate Bracket to the Gate and remove the C-clamps.

WARNING!

RISK OF ENTRAPMENT.
TO MINIMIZE POTENTIAL FOR GATE CONTROLS TO BE ACTIVATED WHILE ALREADY IN USE, LOCATE THE GS4000 CONTROL BOX IN FULL VIEW OF THE GATE.

INSTALLING THE GS4000 CONTROL BOX

The GS4000 CONTROL BOX may be mounted remotely from the MECHANICAL UNIT. Two mounting holes are provided on each flange of the CONTROL BOX (four total). These should be used to mount the CONTROL BOX to a solid, flat surface. The CONTROL BOX should be located so that the Gate and the MECHANICAL UNIT/UNITS **ARE IN FULL VIEW FROM THE CONTROL BOX.**

ELECTRICAL HOOK UP

The GS4000 electrical connection is made at the Input Volts terminals in the CONTROL BOX, see Figure 11. You will need to drill holes as required on the bottom of the CONTROL BOX to permit conduit entry. Run a flexible water tight conduit from the service junction box to the GS4000 CONTROL BOX. Pull three #14 wires from the service junction box in this conduit to the GS4000 Control Box. If the GS4000 is wired for 115 Volts, pull a black, white and green wire. If the GS4000 is wired for 230 Volts, pull a black, red and green wire.

WARNING!

TO AVOID ELECTRICAL DAMAGE TO OPERATOR DO NOT ALLOW TOTAL WIRE LENGTH FROM THE CONTROL BOX TO AC POWER SERVICE PANEL *PLUS* THE DISTANCE FROM THE CONTROL BOX TO THE MECHANICAL UNIT TO EXCEED WIRE LENGTH GIVEN IN TABLE 1 FOR

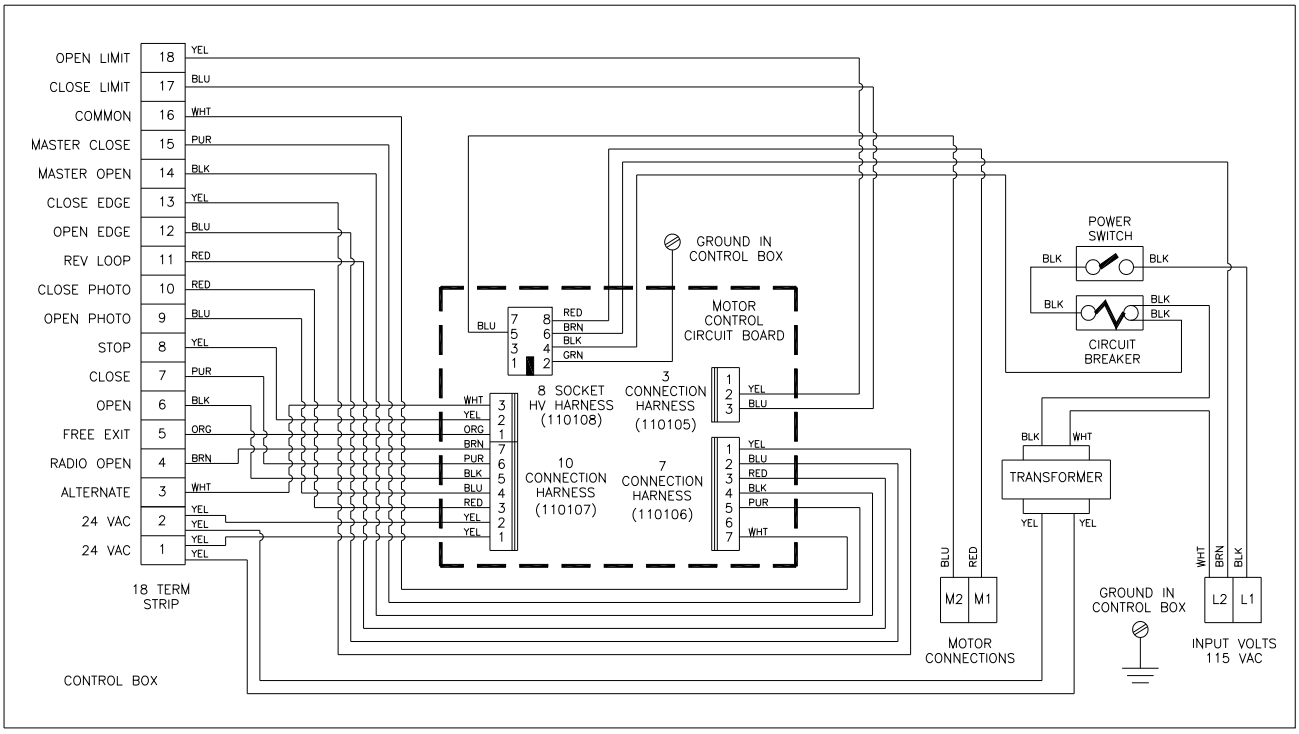

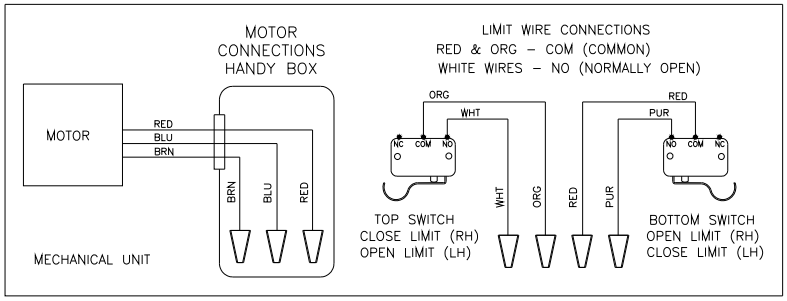

Figure 11: Schematic & Wiring Diagram

C: INSTALLING THE OPERATOR

WARNING!

RISK OF ELECTROCUTION
DO NOT BEGIN THE ELECTRICAL CONNECTION PROCEDURES UNTIL THE POWER IS TURNED OFF AT THE CIRCUIT BREAKER

CONNECTING THE AC WIRING

115 VOLT INSTALLATIONS:

Starting at the GS4000 Control box proceed as follows:

1. Attach to Terminal - L1 - the 115 VAC HOT wire, normally black.
2. Attach to Terminal - L2 - 115 VAC NEUTRAL wire, normally white.
3. The GREEN wire attaches to the GROUND wire, normally green.

230 VOLT INSTALLATIONS:

Note: in 230 VAC wiring systems, there will be two "HOT" wires, normally a red and a black wire. If there is a white wire, typically it will be a neutral wire. Starting at the GS4000 4 x 4 handy box, proceed as follows:

1. The BLACK wire attaches to one of the 230 VAC HOT wires, normally black.
2. The RED wire attaches to the other 230 VAC HOT wire, normally red.
3. The GREEN wire attaches to the GROUND wire, normally green.

PROPER OPERATION OF THE SURGE PROTECTORS MOUNTED ON THE GS4000 CONTROL BOARD DEPENDS UPON A SOLID GROUND. ALSO, UL LISTING REQUIRES THAT THE GS4000 FRAME BE GROUNDED.

WARNING!

TO REDUCE THE RISK OF DAMAGE DUE TO LIGHTNING, ENSURE A SOLID GROUND FROM THE GS4000 GROUND WIRE IN THE SERVICE ENTRANCE 2 x 4 HANDY BOX TO THE ELECTRICAL SERVICE GROUND OR TO A EARTH GROUND STAKE NEAR THE GS4000.

ADDITIONAL LIGHTNING PROTECTION

For those areas where a high probability of ground lightning strikes exists (Florida, Georgia, etc,) additional lightning protection should be installed in the GS4000. Although it may not be possible to protect against all strikes, additional protection will substantially reduce the occurrence of lightning damage. Allstar's lightning data indicates that the most strikes enter the GS4000 through the power lines. Effective protection requires that the surge current from the lightning strike be shunted to ground. This must be done without raising the potential of the circuitry in the GS4000, with respect to ground, to the levels that will damage the solid state circuitry. Lightning strikes generate enormous currents for very short periods of time. Unfortunately, the period of time is long enough to damage solid state components and many times, other components. The key to success is a very low resistance path from the surge protector to ground for these currents in addition to a surge protector that will act fast enough to protect the solid state circuitry. Several manufacturers offer suitable surge protectors.

WIRING THE MECHANICAL UNIT TO THE CONTROL BOX

It will be necessary to run two conduits from the Control Box to the Mechanical Unit. One will be used for the A-C power lines and another for the low voltage, class 2 wiring. See Figure 8. If wiring one control box to one mechanical unit (standard) follow wiring as shown in Figure 13, page 13. For bi-parting installations (one control box and two mechanical units) see page 13 and Figure 15, page 14.

RIGHT HAND AND LEFT HAND INSTALLATION

The GS4000 Control panel is configured at the factory for right hand operation - mechanical unit mounted to the right of the gate leaf as you look at the installation from the inside (secured side). For left hand operation - mechanical unit mounted to the left of the gate leaf as you look at the installation from the inside (secured side) - move the 8 pin high voltage harness connector (white) and the 3 pin limit harness connector (orange) from the right hand connector blocks on the control board to the left hand connector blocks, see Figure 12, below.

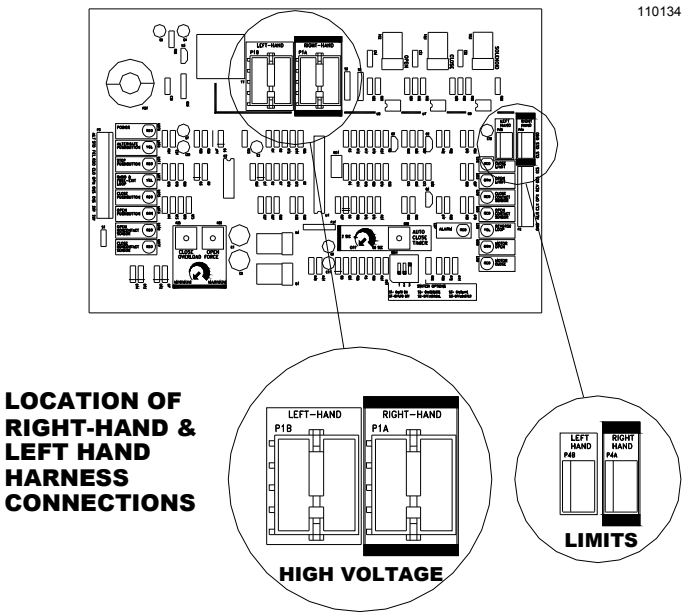

Figure 12: Right/Left Hand Control Board Connectors

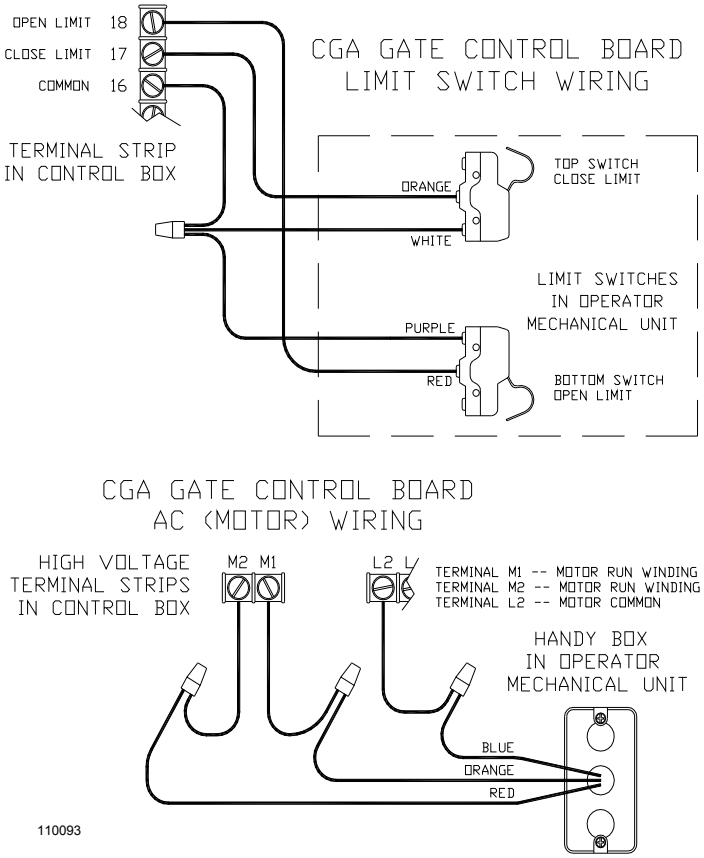

Figure 13: GS4000 Limit & Motor Wiring Diagram

BI-PARTING WIRING

For a Bi-Parting installation, an additional two conduits must be installed between the First Mechanical Unit and the Second Mechanical Unit. (See Figure 8, page 8.) For a Bi-Parting installation, one operator must be a Left Hand unit and the other a Right Hand unit.

The two motors of the Bi-Parting GS4000's will be wired in parallel. BOTH motors will run until both are shut off. If the two gate leafs do not open exactly the same amount, then the first gate leaf to reach it's open position will have to be held (or mechanically stopped) in that position until the second gate reaches its open position. Now, both motors can be turned off. The stop for the first gate can be installed externally or the GS4000 internal Stop Pall mounted on the large output drive sprocket of the GS4000 may be used.

The Limit Switch contacts of the two Bi-Parting units need to be wired in series. Both limit switch contacts must be closed before a connection is made to the limit switch input at the Control Box to stop the motors at the Open or Closed position.

The operation of the Bi-Parting installation is as follows: After receipt of a command to open, both units will begin to open together. The first gate to reach its open position will be stopped by the mechanical stop. Its motor will continue to run. The Torque Limiter will be adjusted to slip when the stop is encountered with the motor still running. The limit switch contact on this first unit is adjusted to close at this position. The second gate has not reached its fully open position. Its limit switch will be still open and no command will be given to the limit switch input at the terminal board until the gate has reached the maximum open position and the open limit contact is closed. Now, a contact will be made to the limit switch input at the terminal board through both limit switch contacts. Both motors will be turned off.

A wiring schematic of the Bi-Parting installation is shown in Figure 15, page 14. It is important this schematic be followed closely and that the color codes at the MECHANICAL UNITS and the CONTROL BOX be followed exactly. Most of the difficulties encountered with Bi-Parting installations are due to the wiring instructions not being followed.

ACCESSORY EQUIPMENT HOOK-UP

All accessory equipment is connected to the 18 terminal barrier strip located inside the GS4000 Control Box. To expose this terminal strip, remove the cover on the Control Box.

There are 13 command inputs (#3 through #15) available to the installer on the GS4000 in a addition to a common terminal (#16). To trigger any of these inputs, a switch or relay closure to the common terminal for a duration longer than 100 milliseconds and of a resistance of less than 100 ohms is necessary. Eight of the inputs, FREE EXIT (#5), OPEN (#6), STOP (#8), REV LOOP (#11),

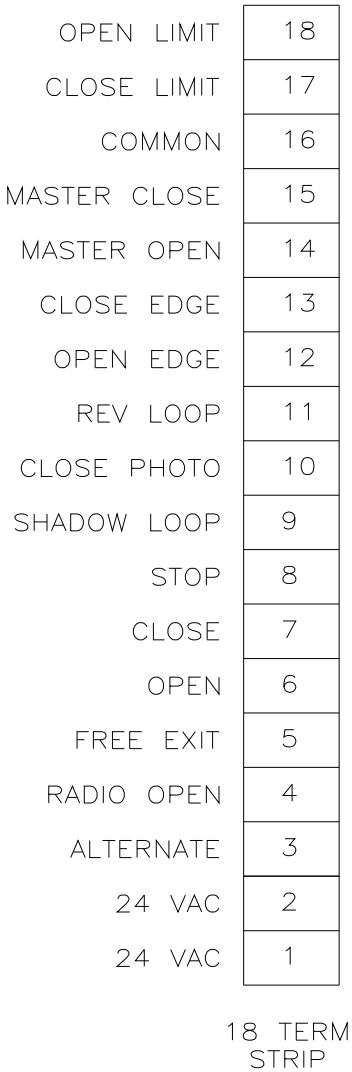

Figure 14: Terminal Strip

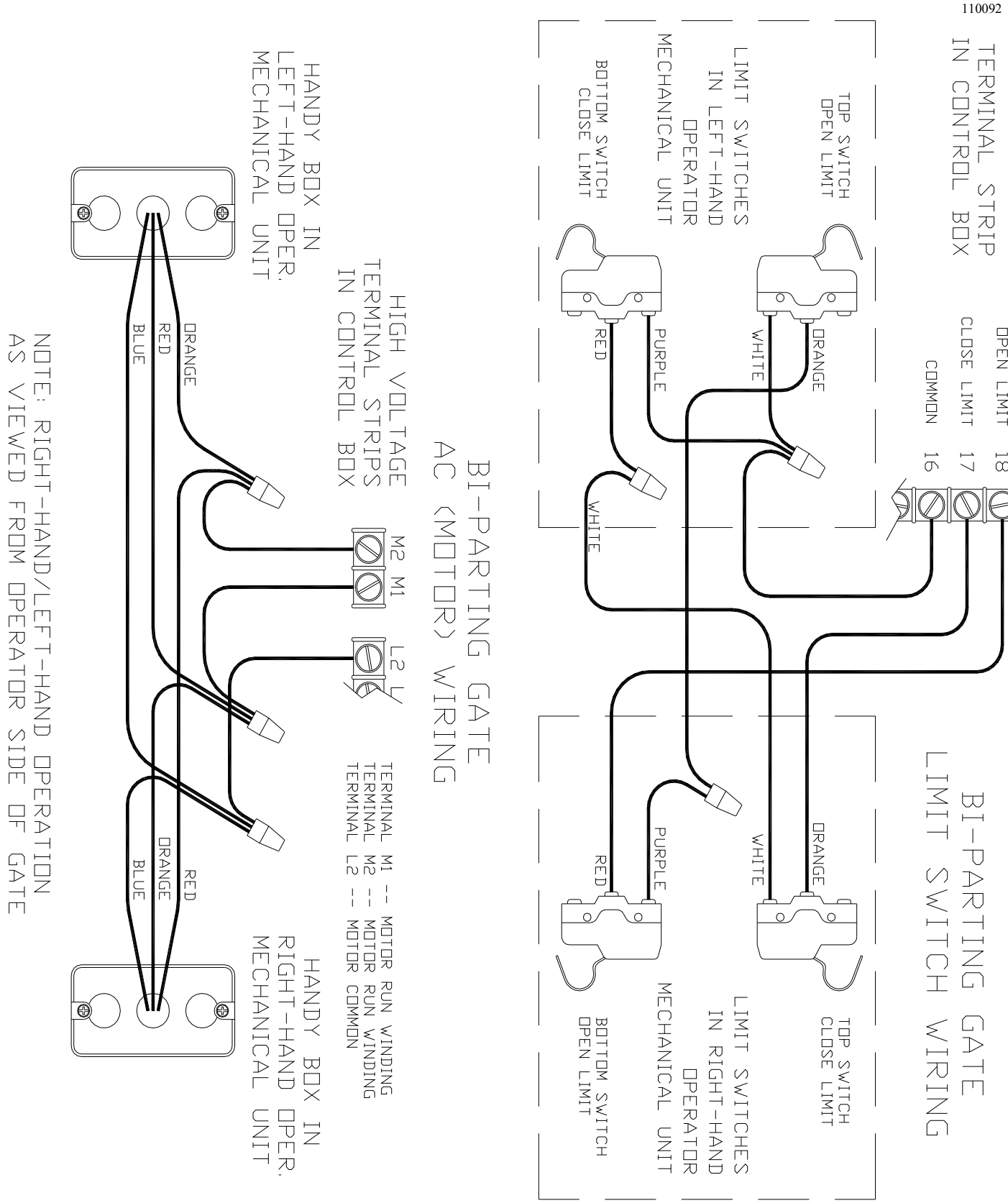

Figure 15: Bi-Parting Installation Limit & Motor Wiring Diagram

CLOSE/OPEN PHOTO/EDGE (#s 9, 10, 12, & 13) can be continuous commands as noted on page 18. Labels identify the function of each of the terminals on the strip. See the TERMINAL STRIP Reference Chart on pages 17-19 related to each terminal number for an explanation of each of the inputs.

The transformer mounted in the GS4000 Control Box can be used power an accessory equipment item such as a radio receiver. This is a Class II transformer and is equipped with an internal fusible link. If this link is "blown" the transformer must be replaced. The transformer is powered whenever the GS4000 main power switch is ON. The maximum power that can be supplied by the transformer for an accessory equipment item is 20 VA or about 1 Ampere at 24VAC. This is usually sufficient to supply an accessory equipment item such as a radio receiver. Check the equipment for its power specifications.

THE MAXIMUM POWER DRAW FOR ALL AUXILIARY EQUIPMENT SHOULD NOT EXCEED 20 VA IF POWER IS SUPPLIED FROM THE GS4000 CONTROL BOARD. FAILURE TO OBSERVE THIS RESTRICTION WILL DAMAGE THE GS4000 CONTROL BOARD AND VOID ANY WARRANTY.

All auxiliary equipment devices must be of the type that require both sides of the transformer supplying power be "floating" and not grounded. The GS4000 auxiliary equipment low voltage power, terminals 1 & 2, is not referenced to ground. **FAILURE TO OBSERVE THIS RESTRICTION WILL DAMAGE THE GS4000 CONTROL BOARD AND VOID ANY WARRANTY.**

Figure 16: Wiring 4-Wire Receiver

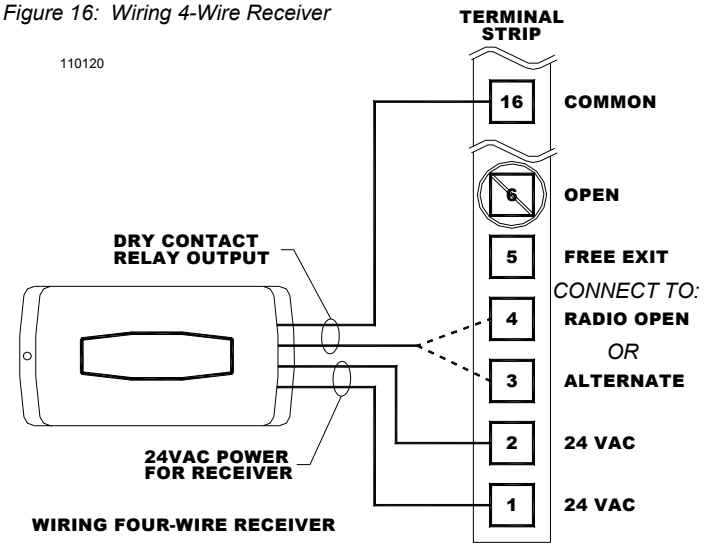

WIRING RADIO RECEIVERS TO THE TERMINAL STRIP

Radio Receivers MUST be of the 4 wire connection hook-up type (where the power input for the receiver is separate from the receiver's output connection). The 4 wire version is necessary as the GS4000 control board 24 VAC output is not referenced to ground. See Figure 16 and the following text for proper connection.

FOUR WIRE RECEIVERS

Four wire receivers replace the "spade" terminals on the RECEIVER with 4 wires. These wires are typically color coded. The instructions with the receiver must be carefully followed to properly connect the receiver. For any 4 wire receiver, two of the wires will be for power input and two will be for the relay contacts. Connect the two wires for the power input to terminals 1 and 2 (24 VAC). Connect one of the two wires for the relay to terminal #4 (RADIO OPEN) or terminal #3 (ALTERNATE) depending on the function desired (see descriptions on the chart on pages 17 - 19) and the other wire to terminal #16 (COMMON) on the GS4000 terminal strip. See Figure 16 for connecting 4 wire receivers to the GS4000.

NOTE: IF THE 4 WIRE RECEIVER INSTRUCTIONS SHOW THAT TWO OF THE WIRES ARE OF THE SAME COLOR AND ARE COMMON CONNECTIONS INSIDE THE RECEIVER, YOU WILL NOT BE ABLE TO UTILIZE THIS RECEIVER AS WIRED WITH THE GS4000 CONTROL BOX. THE POWER SUPPLY CONNECTIONS MUST BE SEPARATE FROM THE RECEIVER OUTPUT CONNECTIONS WITH NO COMMON REFERENCES INSIDE THE RECEIVER.

WIRING A 3-BUTTON STATION

NOTE: THE GS4000 WILL OPERATE ONLY WITH A NORMALLY OPEN STOP BUTTON. THREE BUTTON STATIONS MAY BE ORDERED FROM ALLSTAR WITH THE STOP BUTTON CONFIGURED AS NORMALLY OPEN. See Figure 17 for instructions on wiring a Three Button Station.

Figure 17: Wiring 3-Button Station

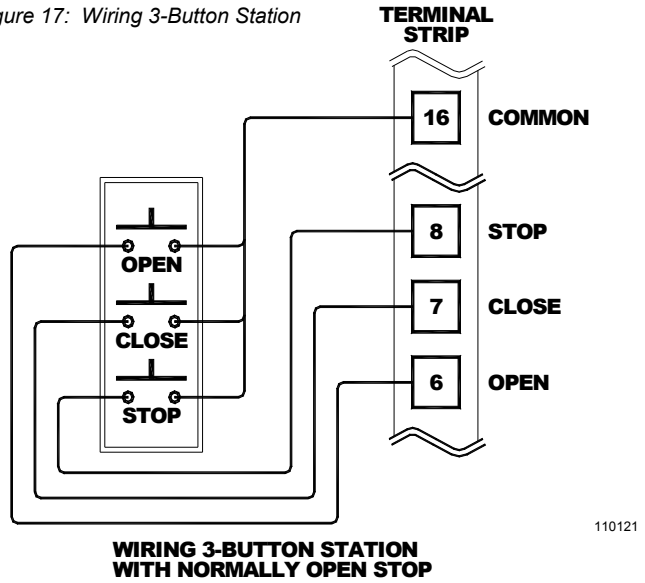

WIRING A KEYPAD, CARD READER OR TELEPHONE ENTRY SYSTEM

These devices activate the GS4000 by a relay contact closure within the device. Typically, these devices will be used to open a gate with the Timer-To-Close feature automatically closing the gate. In general, two wires or terminals are provided by the device to operate the gate. Follow the manufacturers instructions on locating these connections. If one of the connections at the device is labeled as COMMON, then connect this to Terminal #16 of the GS4000 Terminal strip. Connect the other contact to Terminal #5 (RADIO OPEN). If no identification of the connections is noted at the device, then the two wires may be connected to terminals #16 and #5 of the GS4000 in any order.

Keypads, Card Readers and Telephone Entry Systems are typically located remotely from the GS4000. The wiring used is low voltage or CLASS 2. Be sure to run an independent conduit for this wiring from the Entry Device to the GS4000. The wire size should be #16 or #18 stranded for ease of handling.

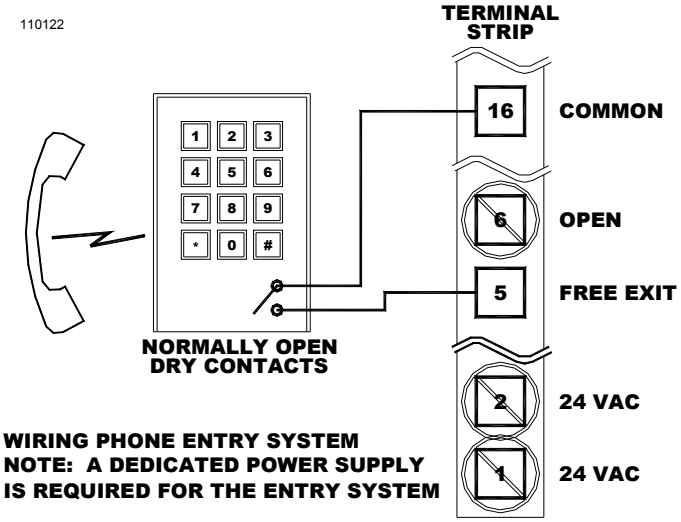

Figure 18: Wiring A Phone Entry System

WIRING VEHICLE DETECTORS

There are three connections that need to be made; 1) the AC power to the Detector, 2) the control connection to the GS4000, and 3) the connection to the loop. All these connections will be made at the Vehicle Detector connector. Follow the wiring instructions provided by the Vehicle Detector Manufacturer.

VEHICLE DETECTOR POWER

Vehicle Detectors may be ordered for 115 VAC or 24 VAC operation. The GS4000 terminals 1 & 2 cannot be used to supply 24 VAC power. Allstar recommends that a 115 VAC Vehicle Detector be used to preclude any future difficulties even though other devices may not be installed at this time. The 115 VAC may be obtained from the GS4000 at the GS4000 Control Box. **The AC power should never be taken from a location where it will be switched off at the GS4000 Power Switch**.

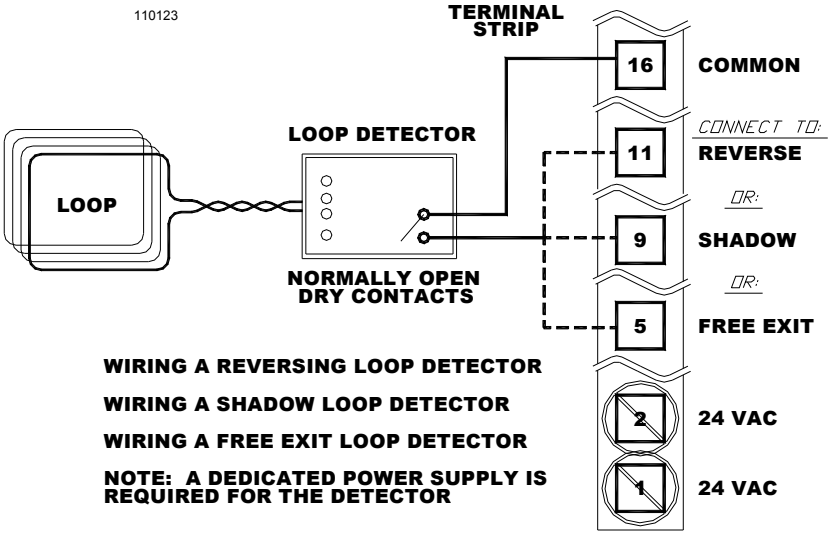

Figure 19: Wiring A Free Exit , Shadow or Reversing Loop

CONNECTING THE VEHICLE DETECTOR

For a REVERSING LOOP connection of the Vehicle Detector, the "relay" or "presence" output of the Detector will be connected to Terminal #11 (REVERSING LOOP) of the GS4000 and the RELAY COMMON wire will be connected to Terminal #16 (COMMON) of the GS4000. As long as a relay closure is present on these two lines, the GS4000 will not allow the gate to close. If the Vehicle Detector is activated and the gate is in the closed position, the presence of this signal will prevent the GS4000 from opening the gate. If the gate is opening, the gate will continue to open. If the signal is removed before the Timer to Close times out after opening, the gate will close after the Timer to Close has completed its cycle. If the signal is removed after the Timer to Close has completed its cycle, the gate will begin to close immediately.

For a FREE EXIT connection of a Vehicle Detector, the RELAY or PRESENCE output signal will be connected to Terminal #5 (FREE

WARNING!

RISK OF ENTRAPMENT!
TO REDUCE THE RISK OF INJURY OR DEATH: LOCATE KEYPAD, CARD READER, KEY SWITCH OR SIMILAR ENTRY DEVICES IN A LOCATION WHERE A USER CAN NOT REACH THROUGH THE GATE OR FENCE TO ACTIVATE THE GATE OPERATOR. THE RECOMMENDED DISTANCE BETWEEN THE GATE OR FENCE AND ACCESSORY SWITCH IS 10 FEET.

WARNING!

IMPROPER WIRING COULD CAUSE ELECTROCUTION OR DAMAGE TO CIRCUITRY. FOLLOW LOCAL BUILDING AND ELECTRICAL CODES.

EXIT) and the RELAY COMMON signal connected to Terminal #16 (COMMON) of the GS4000, See Figure 19. DO NOT CONNECT THE FREE EXIT OUTPUT SIGNAL TO ANY OTHER TERMINAL, SUCH AS RADIO OPEN, BECAUSE THE GATE WILL CLOSE AFTER REACHING THE OPEN LIMIT AND THE TIMER TO CLOSE HAS COMPLETED ITS CYCLE, EVEN THOUGH THE VEHICLE HAS NOT EXITED THE FREE OUT LOOP.

CONNECTING THE LOOP WIRES

Follow the instructions of the Vehicle Detector Manufacturer when connecting the loop wires. Good, tight connections are most important. It is recommended that these wires be soldered to the wiring harness of the Vehicle Detector.

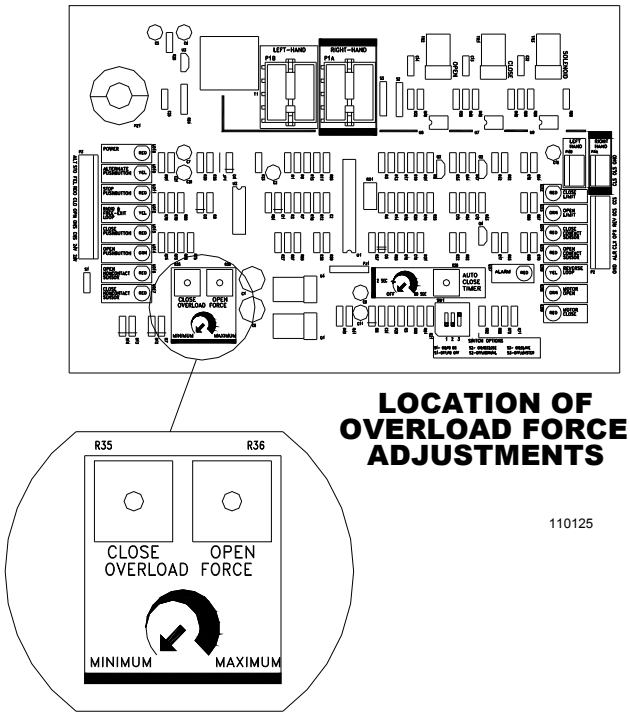

Figure 20: Overload Force Adjustments

PRESETTING THE MOTOR OVERLOAD SENSITIVITY POTENTIOMETERS

The GS4000 has independent adjustments for Open and Close Overload Sensitivity. The GS4000 is shipped from the Factory with the overload settings at their most sensitive setting. During the initial check out phase, it will be necessary to adjust the sensitivity to prevent inherent overloads from gate friction and other gate anomalies. See Figure 20. Adjust the OPEN and CLOSE OVERLOAD potentiometers approximately 1/4 turn clockwise.

Note! Turning the potentiometer clockwise decreases sensitivity. Turning the potentiometer counterclockwise increases sensitivity.

WARNING: THE OVERLOAD POTENTIOMETERS MUST BE SET MORE PRECISELY PRIOR TO COMPLETING THE GS4000 INSTALLATION. (See, FINAL SETTING OF THE MOTOR OVERLOAD SENSITIVITY)

TERMINAL STRIP REFERENCE CHART

#	NAME	DESCRIPTION
1	24 VAC	Provides maximum 10 VA auxiliary power for accessories.
2	24 VAC	Provides maximum 10 VA auxiliary power for accessories.
3	ALTERNATE	Momentary input, must be released and re-entered to be recognized.
	This input is used for "COMMAND OPEN/COMMAND CLOSE" applications. The 1st signal will cause the gate to begin opening. A 2nd signal received during the open cycle will stop the gate immediately. A 3rd signal will close the gate. Connect appropriate access control devices to this terminal and #16 COMMON. Disable the Close Timer (rotate pot fully counter-clockwise).	
4	RADIO OPEN	Momentary input, must be released and re-entered to be recognized.
	Once activated the gate will open fully. Activation while the gate is closing will cause it to re-open.	
5	FREE EXIT	Momentary or continuous input.
	Once activated the gate will open fully. Activation while the gate is closing will cause it to re-open. Continuous activation while the gate is open will prevent the Timer-To-Close function from automatically closing the gate.	
6	OPEN	Momentary or continuous signal. On/Off mode set by Switch #1
	WITH SWITCH 1 OFF: Once activated the gate will open fully. Activation while the gate is closing will cause it to re-open. Continuous activation while the gate is open will prevent the Timer-To-Close function from automatically closing the gate. Continuous signal required to move the gate when in the alarm mode. **WITH SWITCH 1 ON:** Gate does not respond to pushbutton input when in the normal mode. Continuous signal required to move the gate when in the alarm mode.	

TERMINAL STRIP REFERENCE CHART

#	NAME	DESCRIPTION
7	CLOSE	Momentary or continuous signal. On/ Off mode set by Switch #1
	WITH SWITCH 1 OFF: Once activated the gate will close fully. Activation while the gate is opening has no effect. Continuous signal required to move the gate when in the alarm mode. **WITH SWITCH 1 ON:** Gate does not respond to pushbutton input when in the normal mode. Continuous signal required to move the gate when in the alarm mode.	
8	STOP	Momentary or continuous signal.
	Overrides all other signals. Once activated, the gate will immediately stop and await a new command. If the STOP input is continuously activated, the gate will not move.	
9	SHADOW LOOP	Momentary or continuous signal.
	This input is active only when the gate is at rest in the fully OPEN or CLOSED position, it has no effect on the gate when closing or opening. Continuous activation will prevent the gate from moving in the open or close direction (depending on gate position). When the input is removed normal operation is resumed. This input is intended for a vehicle loop detector to sense a vehicle in the gate path. Connect here and to terminal #16 COMMON. Multiple devices may be connected in parallel.	
10	CLOSE PHOTO	Momentary or continuous signal.
	This input is active only when referenced to the closing direction, it has no effect on the gate when opening or about to open. If activated when the gate is closing the gate will stop, pause and reverse in the open direction for 1/2 second (approx. 2 inches) and stop. Continuous activation will prevent the gate from moving in the close direction. When the input is removed normal operation is resumed. If the Timer-To-Close function initiated the close movement and Switch S2 (Re-close) is ON, the gate will automatically re-close from a partially closed position after the input to Close Photo is removed. Continuous activation while the gate is open will prevent the Timer-To-Close function (if enabled) from automatically closing the gate. This input is intended for photoelectric eye systems and other non-contact devices as appropriate. Connect here and to terminal #16 COMMON. Multiple devices may be connected in parallel.	
11	REV LOOP	Momentary or continuous signal.
	This input is active only when the gate is closing or when it's fully open and the Close Timer is operative. All stand-alone vehicle detectors, photo-eyes and active edges should be connected here and to terminals #3 or #13 COMMON. Multiple devices may be connected in parallel.	

#	NAME	DESCRIPTION
12	OPEN EDGE	Momentary or continuous signal.
	This input is active only when referenced to the opening direction, it has no effect on the gate when closing or about to close. If activated when the gate is opening the gate will stop, pause and reverse in the close direction for 1/2 second (approx. 2 inches) and stop. Continuous activation will prevent the gate from moving in the open direction. If a second activation occurs before the limit switch is activated the gate will stop and a require a renewed, intended input to move in the open direction and before an automatic activation device (timer, etc.) will operate. This input is intended for Electric Gate Edge systems and other minimum-contact devices as appropriate. Connect here and to terminal #16 COMMON. Multiple devices may be connected in parallel.	
13	CLOSE EDGE	Momentary or continuous signal.
	This input is active only when referenced to the closing direction, it has no effect on the gate when opening or about to open. If activated when the gate is closing the gate will stop, pause and reverse in the open direction for 1/2 second (approx. 2 inches) and stop. Continuous activation will prevent the gate from moving in the close direction. Continuous activation while the gate is open will prevent the Timer-To-Close function (if enabled) from automatically closing the gate. If a second activation occurs before the limit switch is activated the gate will stop and a require a renewed, intended input to move in the close direction and before an automatic activation device (timer, etc.) will operate. This input is intended for Electric Gate Edge systems and other minimum-contact devices as appropriate. Connect here and to terminal #16 COMMON. Multiple devices may be connected in parallel.	
14	MASTER OPEN	Momentary or continuous signal. Master (output configuration)
	This terminal is used to coordinate two independent systems (two control box/mechanical unit combinations controlling separate gate leaves). Connects to terminal #6 (OPEN) in the companion control box and controls the direction of movement in the companion box (Switch S3 ON).	
15	MASTER CLOSE	Momentary or continuous signal. Master (output configuration)
	This terminal is used to coordinate two independent systems (two control box/mechanical unit combinations controlling separate gate leaves). Connects to terminal #7 (CLOSE) in the companion control box and controls the direction of movement in the companion box (Switch S3 ON).	
16	COMMON	Common connection for low voltage signal inputs, terminals 3 through 15.
17	CLOSE LIMIT SWITCH	Connection for Limit Switch Input — See page 13, Fig. 13 or page 14, Fig. 15, for Limit Switch Wiring (single or bi-parting)

TERMINAL STRIP REFERENCE CHART

#	NAME	DESCRIPTION
18	OPEN LIMIT SWITCH	Connection for Limit Switch Input — See page 13, Fig. 13 or page 14, Fig. 15, for Limit Switch Wiring (single or bi-parting)
M2	MOTOR RUN WINDING	Connection for Motor wiring - See Section C. Figs. 13 or 15 for Motor Wiring (single or bi-parting)
M1	MOTOR RUN WINDING	Connection for Motor wiring - See Section C. Figs. 13 or 15 for Motor Wiring (single or bi-parting)
L2	AC INPUT	Also connection for MOTOR COMMON
L1	AC INPUT	

WARNING!

RISK OF ELECTROCUTION
DO NOT BEGIN TO SET THE FOLLOWING ADJUSTMENTS UNTIL THE POWER IS TURNED OFF AT THE GS4000 CONTROL BOX

SETTING THE LIMIT SWITCHES

With the cover removed from the GS4000 MECHANICAL UNIT, and the arm connected to the gate as well as to the GS4000 Operator, position the gate at its **FULLY CLOSED** position. Identify the lower Limit Switch. Loosen the clamping nut on the Limit Switch Cam for the lower Limit Switch. Rotate the cam on the output shaft until it engages the Limit Switch and an audible "click" is heard. Repeat this several times until you are confident that the position of the cam is such that the Limit Switch is just closed. Carefully tighten the nut on the Limit Switch Cam. Snug the set screw on the cam against the output shaft to protect the cam from accidental movement. Open the gate to its **FULLY OPEN** position. Repeat this procedure for the upper Limit Switch and Cam. (See Figure 21.)

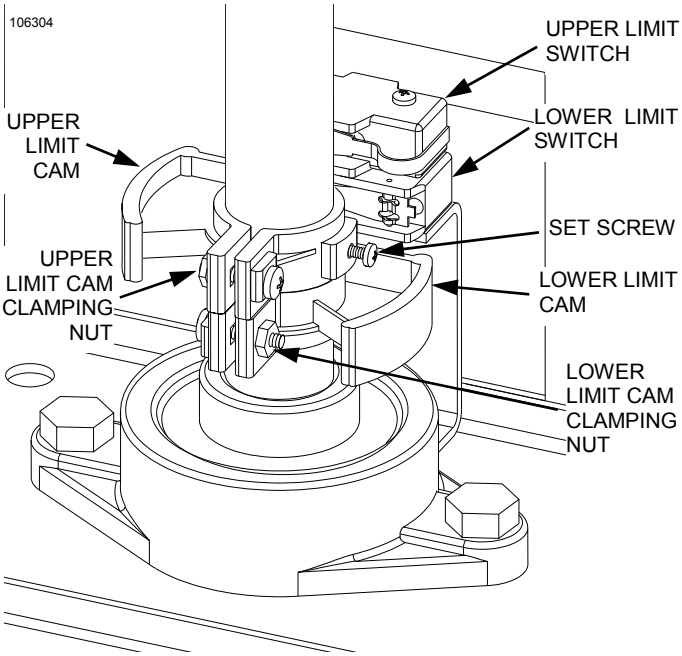

Figure 21: Limit Switches

SETTING THE SWITCH SELECTABLE OPTIONS

The switches that control the selectable options are located on the Control board. See Figure 22.

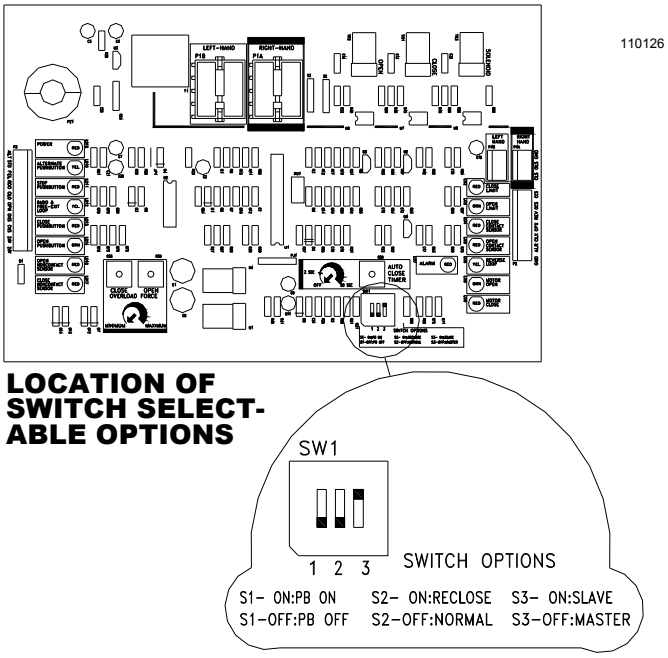

Figure 22: SETTABLE SWITCHES

NO-LOAD TEST MODE

To run/test the GS4000 operator when it is not connected to a gate leaf, turn all of the switches to the "ON" position. The GS4000 can then be operated without a gate leaf attached for 20 complete cycles. If more that twenty cycles are attempted in the test mode the operator control board changes to a "sleep" mode and a low pulsed tone is heard from the audible output. You can reset the operator for a renewed 20 test cycles by turning the power off and back on again. To return to normal operation turn one of the switches to the "OFF" position, then set all the switches to the desired mode of operation as described in the text that follows.

OPEN/CLOSE PUSH BUTTON ENABLE/ DISABLE (PATENT NO. 6,611,205)

Switch S1 controls the Push Button Enable/Disable Feature.
SWITCH 1 OFF: Activating the Open or Close buttons the gate will open or close fully. Activation of the Open while the gate is closing will cause it to re-open. Activation of the Close while the gate is opening has no effect. Continuous activation of an opposing button while the gate is on a limit will prevent operation in that direction. Continuous signal required to move the gate when in the alarm mode.
SWITCH 1 ON: Gate does not respond to pushbutton input when in the normal mode. Continuous signal required to move the gate when in the alarm mode. This patented feature allows you to mount a two or three button station in an unsecured location as it will only be active when in the alarm mode.

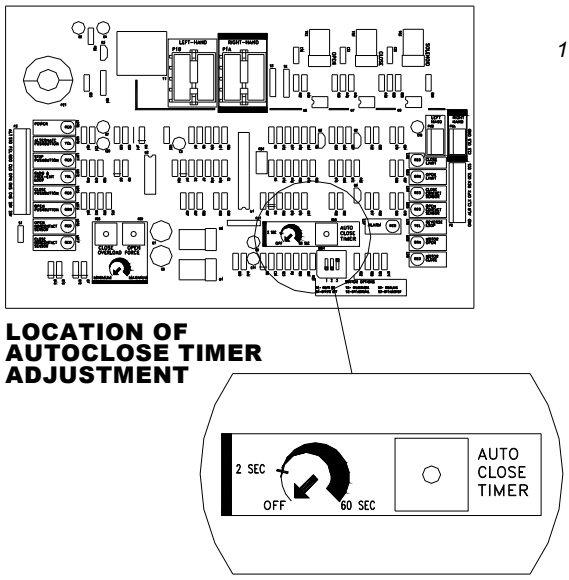

Figure 23: Location of Auto-Close Timer Adjustment

TIMER TO CLOSE SETTING

The Timer to Close is controlled by the setting of the "AUTO CLOSE TIMER" potentiometer on the control board, see Figure 23. When the pot is adjusted fully counter-clockwise the Timer-To-Close is disabled. Turning the pot approximately 1/4 turn clockwise will enable the Timer To Close function with a delay of approximately 2 seconds between the gate reaching the full open position and automatically closing. To increase the time delay continue to turn the pot in the clockwise direction to a maximum delay of 60 seconds (one minute).

AUTO RE-CLOSE (TIMER-TO-CLOSE FUNCTION)

Switch S2 controls the Auto-Re-close function. If the Timer To Close function is enabled (see above), setting Switch S2 to the ON position will activate the Auto-Re-close feature on the motor control board. When the auto-re-close is activated, the gate will re-close after stopping and backing-off from a non-contact sensor input if the close movement was initiated by the Timer-To-Close function on the control board. The gate will not re-close if the sensor input was received from a contact sensor or if the inherent overload sensor was activated.

MASTER/SLAVE CONFIGURATION

Switch S3 controls the Master/Slave Terminals (#s 14 & 15) configuration setting. The setting is used when two control boards (boxes) are used in conjunction with two mechanical units.

With Switch S3 in the ON position terminals 6 & 7 (OPEN & CLOSE) are in the Slave mode and could be coupled to and would be controlled by a Master control board (box). With Switch S3 in the OFF position terminals 14 & 15 are in the Master (output) mode and could be coupled to and would control a Slave control board (box).

APPLYING POWER TO THE GS4000

PRE-POWER CHECK LIST

Before applying power to the GS4000 for the first time, go through the following check list to ensure that all is in order for the application of power.

1. Check that the GS4000 power switch is off.

2. Check that the breaker at the power panel is on.

3. With a voltmeter on the proper scale, check that the line voltage at terminals L1 and L2 on the GS4000 control board is the voltage that is expected. Connection of a 115 VAC GS4000 to an unexpected 230 VAC line is a common occurrence. This will cause readily identifiable board failure that **WILL NOT BE COVERED UNDER WARRANTY**.

4. Manually move the gate to the center of the gate opening.

5. Make sure the Torque Limiter is properly adjusted to slip under a load when a moderate amount of force is applied to the gate in the center of its travel. If the adjustment is too loose, the overload sensitivity will not function properly and the Torque Limiter may slip when the gate is under a wind loading. Start by tightening the large nut on the Torque Limiter to 35 ft-lbs./in. To fine tune, increase or decrease this by approximately 5 ft-lbs./in. increments. When a satisfactory setting is found, tighten the set screw in the side of the large nut.

6. Set all the Switch selectable options switches ON for the test mode.

7. Make sure that the overload sensitivity potentiometers (Open and Close) are set to their preliminary start up position.

8. **Temporarily remove the white high voltage connector from the control board.**

CHECKING THE INDICATOR LIGHTS

There are 16 indicator lights on the control board of the GS4000. See Figure 24. These lights are used to verify proper operation of the GS4000.

TURN ON THE MAIN POWER SWITCH TO THE GS4000.

- Note that the "POWER" lamp is lighted. This indicates that power is applied to the control board and the power supply is functioning

1. Connect one end of a short piece of wire (not supplied) to terminal #16 (COMMON).
2. With the other end of this wire, (make sure that this loose end is free of insulation), touch the following terminals and observe the noted response of the lamps.

3. Connect to Terminal #17, Close Limit Switch: Close Limit Switch light is ON.
4. Connect to Terminal #18, Open Limit Switch: Open Limit Switch light is ON.
5. Connect to Terminal #4, Radio Open.: Radio Open light is ON, Motor Open light is ON.

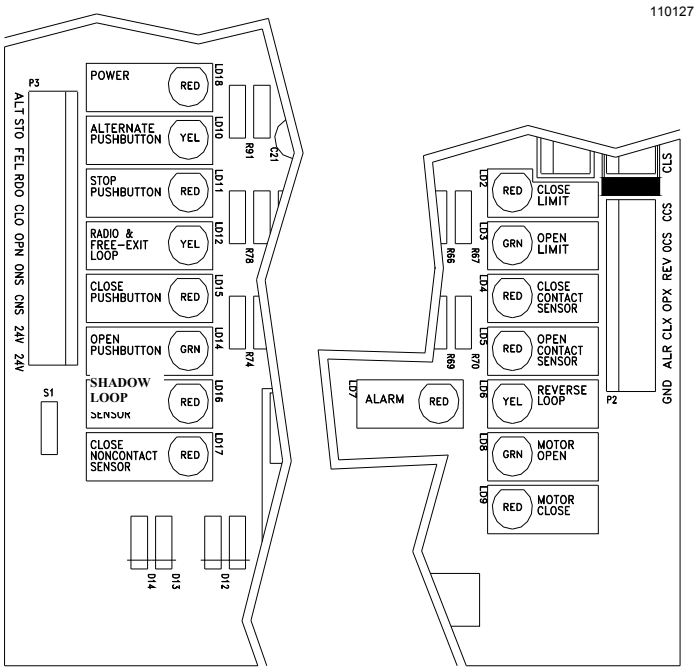

INDICATOR LAMPS

Figure 24: Indicator Lights

6. Remove wire from Terminal #4, Radio Open. Radio Open light goes OUT, Motor Open light stays ON.
7. Connect to Terminal #8, Stop : Both Motor Open and Motor Close lights are momentarily ON, then both Motor Open and Motor Close lights go OUT. The Stop Pushbutton light is ON as long as the wire is held on the terminal and the goes OUT when the wire is removed.
8. Connect to Terminal #7, Close: Observe that the Motor Close light comes ON and the Close Pushbutton light is ON. Remove the wire from terminal #7 and observe that the Close Pushbutton light goes OUT and the Motor Close light stays ON.
9. Connect to Terminal #11, Reversing Loop,: Observe that both Motor lights are ON momentarily and then the Motor Close light goes OUT and the Motor Open light stays ON.
10. Connect to Terminal #8, Stop,: Same as above, Sequence 5.
11. Connect to Terminal #3, Alternate: Alternate light is ON, Motor Close light is ON. Remove wire and note that the Alternate light goes OUT but the Motor Close light stays ON.
12. Connect to Terminal #3, Alternate again: Note that the Alternate light comes ON, that the Motor Close light goes OUT and that the Motor Open light comes ON.
13. Connect to Terminal #6, Open: Observe that the Motor Open light comes ON and the Open Pushbutton light is ON. Remove the wire from terminal #6 and observe that the Open Pushbutton light goes OUT and the Motor Open light stay ON.
14. Connect to Terminal #12, Open Contact Sensor: Note that the Open Contact Sensor light comes on & remains on until the connection is removed. Observe that the both Motor Open and Motor Close lights are momentarily ON, then the Motor Open light goes out and the Motor Close light stays on for approximately 1 second then goes out.
15. Connect to Terminal #7, Close: Same as above Sequence #6.
16. Connect to Terminal #10, Close Non-contact Sensor: Note that the Close Non-contact Sensor light comes on & remains on until the connection is removed. Observe that the both Motor Open and Motor Close lights are momentarily ON, then the Motor Close light goes out and the Motor Open light stays on for approximately 1 second then goes out.
17. Connect to Terminal #7, Close: Same as above Sequence #6.
18. Connect to Terminal #13, Close Contact Sensor: Note that the Close Contact Sensor light comes on & remains on until the connection is removed. Observe that the both Motor Open and Motor Close lights are momentarily ON, then the Motor Close light goes out and the Motor Open light stays on for approximately 1 second then goes out.
19. Connect to Terminal #9, Shadow Loop: Note that the Shadow Loop light comes on and remains on until the connection is removed.

CHECK OF THE INDICATOR LAMPS HAS BEEN COMPLETED.

IF THE INDICATOR TEST PERFORMED SATISFACTORILY, TURN OFF THE AC POWER SWITCH AT THE GS4000 CONTROL BOX AND RECONNECT THE WHITE HIGH VOLTAGE HARNESS CONNECTOR TO THE CONTROL BOARD. RESET THE SWITCH SELECTABLE OPTIONS (S1, S2, S3) TO THE APPROPRIATE SETTINGS AS PER THE FUNCTIONS DESIRED (SEE PAGE 19 AND 20).

WARNING!

RISK OF ENTRAPMENT
OVERLOAD SENSITIVITY HAS NOT BEEN SET.
DO NOT ALLOW ANYONE NEAR THE GATE AND DO NOT LEAVE GATE AND GS4000 UNIT UNATTENDED UNTIL FOLLOWING PROCEDURES HAVE BEEN COMPLETED.
USE CAUTION DURING THIS FINAL ADJUSTMENT PERIOD.

D: STARTING THE OPERATOR - FINAL SETTINGS

WARNING!

RISK OF ENTRAPMENT
OVERLOAD SENSITIVITY HAS NOT BEEN SET.
DO NOT ALLOW ANYONE NEAR THE GATE AND DO NOT LEAVE GATE AND GS4000 UNATTENDED UNTIL FOLLOWING PROCEDURES HAVE BEEN COMPLETED.
USE CAUTION DURING THIS FINAL ADJUSTMENT PERIOD.

PRE RUNNING CHECKLIST

Before running the GS4000, make sure:

1. The proper Left-or Right-hand or Bi-Parting wiring has been completed (if applicable).
2. The Limit Switch Cams have been preliminarily set.
3. The Overload Sensitivity has been preset.
4. The Switch Selectable Options have been set.
5. The Gate has been positioned in the center of it's travel.
6. The Torque Limiter is properly adjusted.
7. No other devices should be connected to the terminal strip until the powering-up procedures are completed.

RUNNING THE GS4000

Turn ON the main power switch. The Power Lamp will come on. The Alarm will sound for 1/2 second (a brief chirp), the Alarm indicator lamp will flash for 1/2 second. The gate should not move. If the gate moves in either direction turn off the power and call Factory Service for assistance.

1. Give the GS4000 a command to open by connecting the jumper wire from Terminal #16 (COMMON) to Terminal #6 (OPEN). The gate should move to the fully open position.
2. If the TIMER TO CLOSE option has been selected, the timer will activate the gate to close within a maximum of 60 seconds depending on the setting of the TIMER TO CLOSE potentiometer (See Figure 23, Page 20).
3. If the TIMER TO CLOSE is not to be used on this installation, activate the gate to Close by connecting the jumper wire from Terminal #16 (COMMON) to Terminal #7 (CLOSE). The gate should move to the fully closed position.
4. Allow the gate to close and note the position of the gate.

IF THE GATE HITS THE OPEN OR CLOSE STOPS OR EITHER THE MOTOR OPEN OR CLOSE LIGHT REMAINS ON AFTER REACHING THE MECHANICAL STOPS AND THE LIMIT SWITCH LIGHT IS "ON", TURN OFF THE MAIN POWER SWITCH. IF THE GATE HITS THE MECHANICAL LIMIT AND THE LIMIT SWITCH LIGHT DOES NOT COME ON, THE LIMIT CAM OR THE STOP WILL NEED TO BE READJUSTED.

If the gate stops short of the desired fully open or closed position or if it bangs against the end stops, TURN OFF THE MAIN POWER and reset the appropriate Limit Switch Cam. After you have attained the final adjustment, run the GS4000 open and closed several times to ensure that the positions set will be retained.

SMART™ SETTING - MAXIMUM RUN TIMER

The GS4000 is equipped with a **S**elf adjusting **MA**ximum **R**un **T**imer, SMART™ , that will turn the GS4000 OFF if a Limit Switch command is not received within five seconds of the time required to fully Open or Close the gate. The purpose of the Maximum Run Timer is to turn off the GS4000 if the gate should become jammed when opening or closing. In this case, the Limit Switch will not be activated. Should this occur, the Torque Limiter will slip and the pads will be worn out prematurely. The Maximum Run Timer will prevent this by turning OFF the GS4000. Once the obstruction is removed, any command will reactive the GS4000.

To set the Smart™ Maximum Run Time fully open and close the gate five (5) times. The control board will sense the time required and add approximately four seconds.

WHEN CHECKING OPERATION OF THE LIMIT SWITCHES, BE CERTAIN THE MOTOR IS BEING TURNED OFF BY THE LIMIT SWITCH AND NOT THE MAXIMUM RUN TIMER. SHOULD THE GATE REACH THE OPEN OR CLOSED POSITION AND THE RESPECTIVE LIMIT SWITCH LIGHT DOES NOT COME ON BUT THE MOTOR STOPS RUNNING, THEN THE MAXIMUM RUN TIMER IS TURNING OFF THE MOTOR. TURNING THE GS4000 OFF BY THE MAXIMUM RUN TIMER WILL CAUSE THE TORQUE LIMITER TO SLIP FOR AN UNNECESSARY AMOUNT OF TIME EACH TIME THE GATE IS OPERATED. THE TORQUE LIMITER PADS ARE NOT CAPABLE OF LONG LIFE UNDER THESE CONDITIONS. PREMATURE WEAR WILL OCCUR AND FREQUENT ADJUSTMENT OF THE TORQUE LIMITER WILL BE NECESSARY.

FINAL SETTING OF THE CLOSE TIMER

To alter the amount of time that the close timer will hold the gate open, adjust the timer potentiometer located on the Control Board. See Figure 23, page 20.

The Close Timer is adjustable from 2 to approximately 60 seconds. Turning the potentiometer **clockwise increases** the delay; turning it **counterclockwise decreases** the delay.

FINAL SETTING OF THE MOTOR OVERLOAD SENSITIVITY

The motor overload sensitivity was preset for each direction before turning on the main power to prevent the operator from "self-tripping" during the preliminary adjustment period.

Adjust the Open Overload Force potentiometer, see Figure 20 fully counter-clockwise then approximately 1/16 of a turn in the clockwise direction. Start from the closed gate position and give the GS4000 an open command and observe the Gate. If the gate stops and reverses anywhere in the cycle turn the Open Overload potentiometer approximately 1/16 in the clockwise direction. Repeat this process until the gate will open without the Open Overload tripping and with the Open Overload potentiometer in the most counterclockwise direction. (Make sure the gate swings easily and there are no obstructions in the path of the gate.)

Repeat the above adjustment procedure for the close direction.

CAUTION: During this process the alarm will sound if the overload sensor is activated two sequential times before the gate reaches a limit (open or close). To reset the alarm sensor use constant pressure on a control button connected to the OPEN or CLOSE input and move the gate to a fully open or closed position or turn off and restore the power to the operator.

When you are satisfied that you have the best settings, test these settings by striking the gate a sharp blow with the palm of your hand in both the open and close direction. The OVERLOAD should respond immediately to your blow. If the Torque Limiter slips before the overload is detected, the Torque Limiter will need to be tightened. The purpose of the Torque Limiter is to protect the mechanical components of the GS4000 (primarily the Gear Box). The Torque Limiter should be adjusted so that the OVERLOAD will be activated before slippage occurs.

IMPORTANT ! THE OVERLOAD POTENTIOMETERS MUST BE ADJUSTED TO THE MOST SENSITIVE POSITION POSSIBLE WITHOUT CAUSING "SELF-TRIPPING" DUE TO THE GATE'S INHERENT FRICTION OR TO VARIATIONS IN THE GATE HINGE. TRY ADJUSTING THE POTENTIOMETERS SEVERAL TIMES BY SMALL INCREMENTS, TESTING THE OVERLOAD BY STRIKING THE GATE WITH YOUR PALM IN BOTH DIRECTIONS OF TRAVEL. REPEAT THIS TEST UNTIL YOU ARE SATISFIED YOU HAVE THE MOST SENSITIVE SETTING OF THE POTENTIOMETERS.

Disconnect the crank arm from the output shaft to permit re-installation of the cover on the mechanical unit. Install the operator cover and secure it to the frame with (2) 1/4-20 hex bolts. Remember to re-install the rain seal on the output shaft. Re-connect the gate arm on the GS4000 and secure it with the padlock provided. Complete the installation by replacing the cover on the Control box.
Review the Installation Notes in Section A of this manual and describe the gate system operation to the end user. Review the Gate Operator System Operation and Safety Guide in Section F of this manual with the end user.

You are now ready to install and connect the ancillary equipment. INSTALLATION STEPS DETAILED IN SECTIONS A, B, C AND D MUST BE COMPLETE BEFORE PROCEEDING.

1. Installing Entry Devices

After you are satisfied that all the loops are functioning properly, proceed with the installation of any additional entry devices, such as a Radio Receiver, Telephone Entry or Key Pad. Connect the Radio Receiver and observe the precautions regarding radio receivers described on page 15. Other entry devices **MUST** be connected to the appropriate terminal(s) as their functions warrant as described on pages 17 through 19.

2. Installing a Magnetic Lock

The GS4000 can (as an option) be configured and wired to provide a closed contact to control the power to a Magnetic Lock. This option must be ordered at the same time as the operator or as a kit installation after the original installation.

The magnetic lock must be powered by an external source, the operator provides only a contact to energize and de-energize the lock.

Note: the Allstar GS1000 (slide gate operator) uses the same Control Board as the GS4000, except for the configuration of the LOCK circuitry. If the LOCK is energized when the gate is opening or closing, a GS1000 Control Board has been accidentally installed in your GS4000 operator. It must be replaced with a GS4000 BOARD.

The Magnetic Lock will be released by the GS4000 about 100 milliseconds prior to giving the gate an Open Command. This time delay is to allow the magnetic field in the Magnetic Lock to decay and release the Lock prior to starting the gate.

WARNING! **IMPORTANT SAFETY INSTRUCTIONS. TO REDUCE THE RISK OF SEVERE INJURY OR DEATH: READ AND FOLLOW ALL INSTRUCTIONS IN THIS MANUAL!**

To the Owner/End User of Allstar's GS4000:

Thank you for choosing an Allstar product. We are confident you will have many years of use and satisfaction with your gate operator.

Your GS4000 Operator is part of your unique gate operating system, which may consist of a variety of components, including the gate, the gate tracks, posts, and electronic safety features. These components combined present certain risks and safety issues of which you, the end user, must be aware.

Each unique system presents a unique set of hazards which we cannot possibly address individually. These instructions will help you to identify the potential risks and safety issues your gate operator system presents, and guide you as you make your system as safe as possible for everyone who uses it.

Your first step is to consider the intended use of the gate system, who will be using the gate system, and in what manner the system is installed. You should have a clear understanding of how often the gate will be opened, who will be opening it, whether children and the general public will be near the gate system, and how close the gate system is to public property. Once you have answered these questions, you are ready to decide what safety measures must be taken to prevent injury.

To minimize the risk of entrapment in your gate system, install the following safety features:

- Electric gate edges
- Enclosed tracks
- Vertical guard posts
- Protective screen mesh
- Photoelectric sensors
- Instructional and precautionary signs
- Covers for exposed rollers

Each safety feature is a separate component in your gate system. Read and follow all instructions for each of the components of your unique system. **Ensure that all instructions for mechanical components, safety features and the Allstar GS4000 are available for everyone who will be using your gate system.**

The two warning signs shipped with your GS4000 Operator (See Figure 4, Page 5 of this manual) must be installed in prominent positions on both sides of your gate. Keep them clean and legible.
Read and put into practice the safety points that follow which present the basic guidelines for the safest operation of your gate operator system.

SAVE THESE INSTRUCTIONS !

AVOID ENTRAPMENT: Stay away from the **path** of the gate and all moving parts (gate arms, etc.) at all times. Keep clear of the pinch points identified below.. Install guards or other safety features to prevent access to pinch point areas. Install guards on open rollers.

PREVENT PERSONAL INJURY OR DEATH: Do not stand near or on the gate. Gate may be activated without notice. Do not allow anyone to "ride" the gate, or place arms or legs through the gate. The force of the gate can cause serious personal injury or death. No one should cross the path of a moving gate.

NO CHILDREN OR PETS ALLOWED: Never allow a child to operate gate controls, "ride" a gate, or play in the area of a gate. **Install and store all controls out of children's reach**. Also, pets must be kept away from the gate. Install a pedestrian gate in applications where children or pets need access.
This entrance is for vehicles only. Pedestrians must use a separate entrance.

PRECAUTIONS FOR PEDESTRIAN TRAFFIC OR RESIDENTIAL AREAS.

The internal operator overload sensor may not be adequate entrapment protection in all situations to prevent arm, leg, or hand injuries. Padded electric gate edges, pneumatic gate edges, or photoelectric sensors are therefore necessary when automatic gates are used near pedestrian traffic. See the figure below. **Use of a pedestrian walk gate is mandatory where there is nearby pedestrian traffic.**

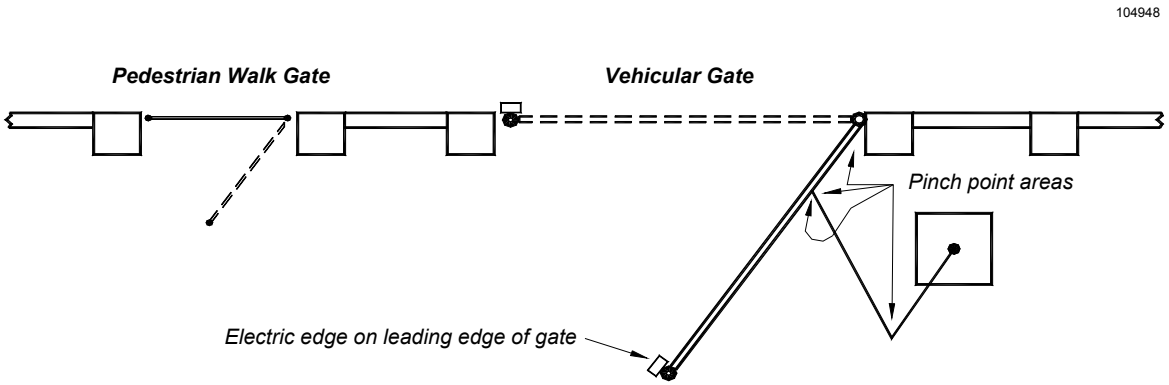

Figure 25: Entrapment Protection

F: END USER INSTRUCTIONS GATE OPENER OPERATION & SAFETY GUIDE

ALL APPROPRIATE SAFETY FEATURES MUST BE INCORPORATED INTO YOUR GATE SYSTEM.

KEEP GATE IN SIGHT: Never activate the gate unless it is in sight. Install mounted controls in full view of the gate. Be sure the gate area is clear before activating the gate, and watch the gate and gate area as the gate is in motion.

MAINTAIN ALL COMPONENTS OF GATE SYSTEM: Follow the maintenance instructions included with the gate, the gate operator, and the safety features and/or accessories that make up your gate operator system. Have a professional service technician perform any adjustments or maintenance to the components. ***Fully test all safety features monthly.*** Discontinue the use of faulty safety equipment immediately, and have the equipment serviced or replaced. by a qualified service technician. The gate must reverse on contact with a solid, rigid object or when an object activates the non-contact sensors. After adjusting the force or limits of travel, retest the gate operator. Failure to adjust and retest the gate operator properly can increase the risk of injury or death.

INSTALL SAFETY DEVICES: In residential applications or in areas where pedestrians may be present, or if your gate closes automatically, be sure an electric edge(s) and/or a photoelectric sensor(s) has (have) been installed and is/are operating properly. These features are intended to detect pedestrian traffic and prevent injury or entrapment.
Loop detectors may be installed to detect vehicular traffic and prevent vehicular damage.

MAINTAIN THE GATE AND GATE HARDWARE: A damaged gate or one that cannot be easily opened and closed manually must be repaired before installing a gate operator. A poorly operating gate may cause the load sensing device of the operator to fail, causing a risk of entrapment. ***Never overtighten the clutch or load sensing device to compensate for a poorly swinging gate.*** Correct all mechanical problems on the gate and gate hardware before installing the gate operator. Have a qualified service technician make repairs to the gate.

LOCATE MANUAL CONTROLS SAFELY: A manual control such as a pushbutton or keyswitch must be included in your gate system design to be used if automatic controls such as radio controls or loop detectors do not function. Carefully consider the placement of the manual control: It must be ***out of reach of the gate*** so that no one pushing the button or inserting the card is in the path of the gate or moving parts; it must also be ***within sight of the gate*** so that the operator can watch the gate and gate area during operation. *The recommended minimum distance between the gate or fence and manual controls accessory is 10*

KNOW YOUR GATE ARM DISCONNECT FEATURE FOR MANUAL OPERATION: In the event of a power outage, you may need to manually operate your gate. The GS4000 is equipped with a keyed padlock to permit the gate arm to be manually disconnected from the GS4000 operator. This will allow you to manually push the gate open or close as needed. Be sure to have the service technician or dealer installing your gate system give you the key to the padlock and show you how to use this feature quickly and safely. Keep the key in a safe, accessible place. Manual operation is to be attempted only when the operator is not moving the gate under power.

BASIC OPERATIONAL GUIDE

- If the gate is fully closed an Open Button, Alternate, Radio or Free Exit input will cause the gate to begin moving in the open direction.
- If the gate is fully open a Close Button, Alternate, or Radio input will cause the gate to begin moving in the close direction.
- If the gate is moving in a Close direction a Close Non-Contact Sensor, Close Contact Sensor input or a Close Overload activation will cause the gate to stop, pause and reverse for approximately 2 inches in the Open direction.
- If the gate is moving in a Close direction an Open Button, Radio, Reversing, or Free Exit Loop input will cause the gate to stop, pause and reverse and run in the Open direction.
- If the gate is moving in a Close direction a Stop Button or Alternate input will cause the gate to stop. A subsequent Alternate input will cause the gate to begin moving in the Open direction.
- If the gate is moving in an Open direction an Open Non-Contact Sensor, Open Contact Sensor input or an Open Overload activation will cause the gate to stop, pause and reverse for approximately 2 inches in the Open direction.
- If the gate is moving in an Open direction a Stop or Alternate input will cause the gate to stop. A subsequent Alternate input will cause the gate to begin moving in the Close direction.
- Two sequential activations of the Overload detector (Open or Close direction) before the gate reaches a limit will cause the operator to go into the alarm mode. To reset the operator remove the obstruction and either use constant pressure on a control button connected to the OPEN

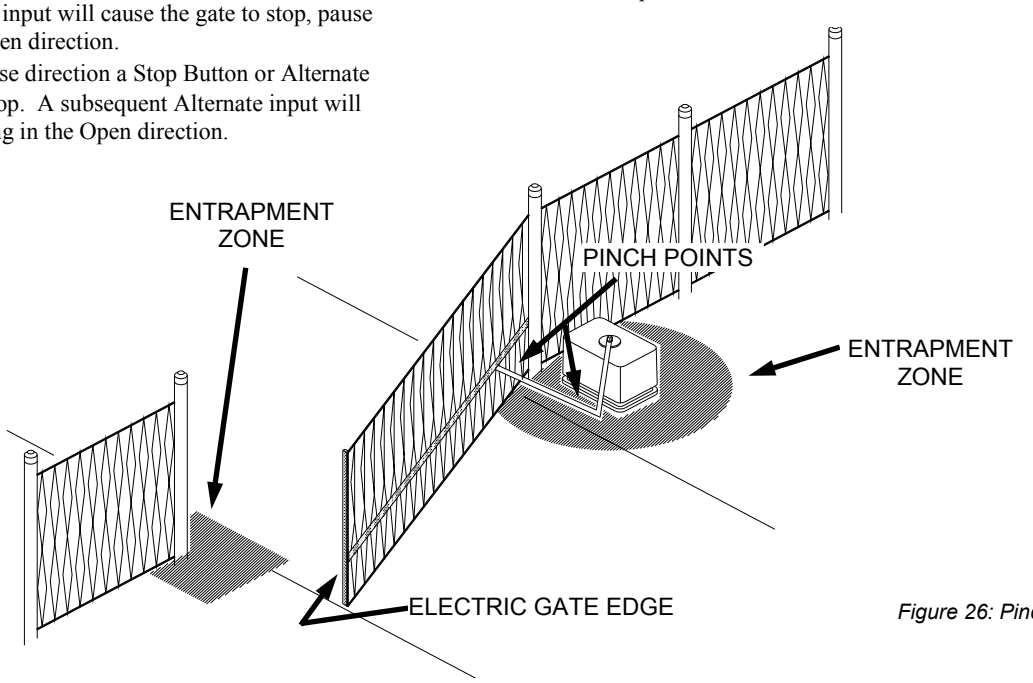

Figure 26: Pinch Points

MECHANICAL UNIT EXPLODED VIEW

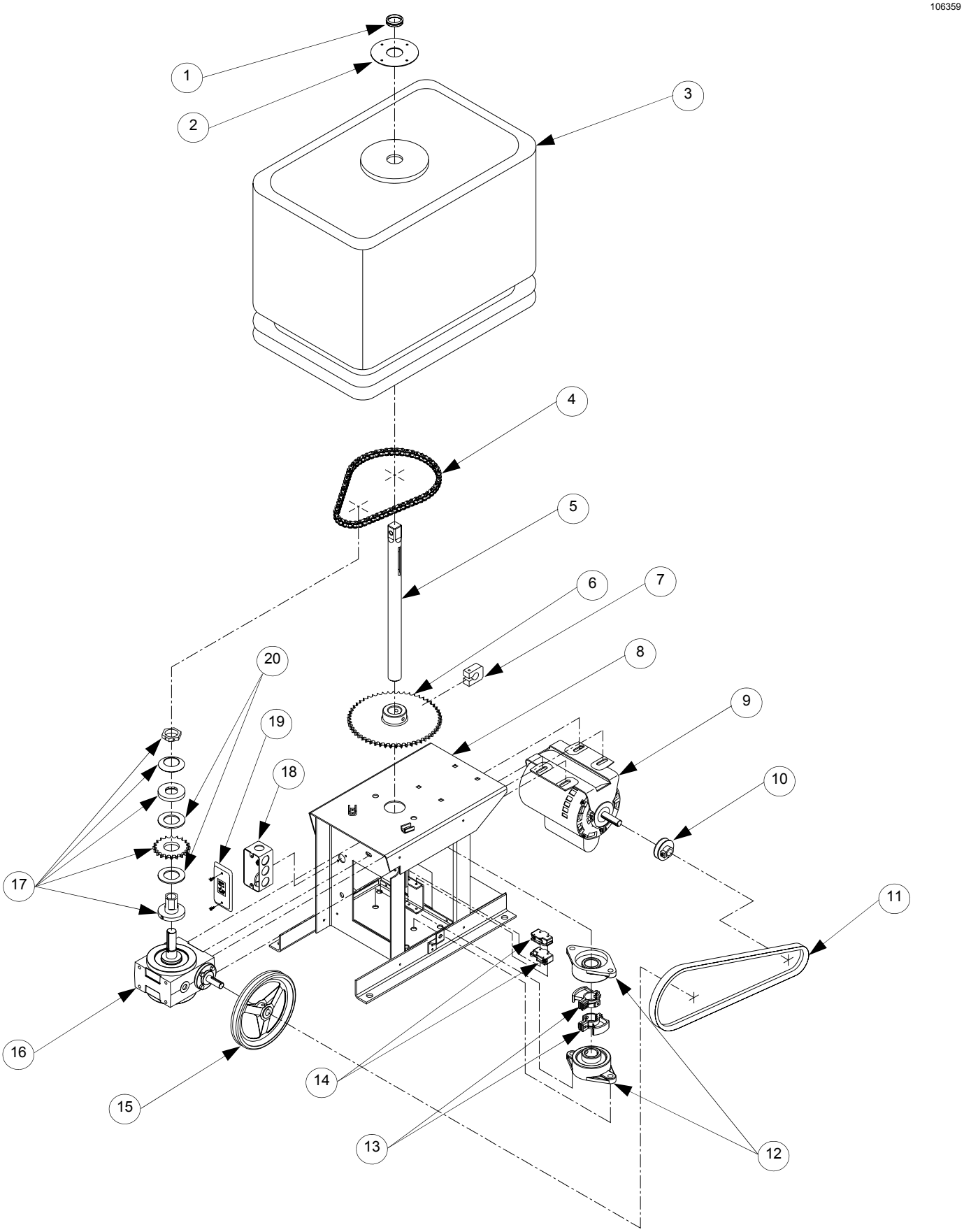

Figure 27: GS4000 Mechanical Unit Exploded View

MECHANICAL UNIT PARTS LIST

ITEM #	PART #	DESCRIPTION
1	010291	RAIN SEAL RUBBER RING
2	104442	RAINSEAL PLATE
3	010279	OPERATOR COVER
4	010221	ROLLER CHAIN
5	104452	OUTPUT SHAFT
6	010216	SPROCKET, 1-1/4 SHAFT
7	104479	ARM STOP PALL
8	010278	OPERATOR FRAME
9	010172	MOTOR
10	010213	PULLEY, 2 IN V BELT, 5/8 IN BORE
11	010220	V-BELT
12	010215	BEARING, 1-1/4 SFT
13	010436	ACTUATOR, LIMIT CAM
14	010156	LIMIT SWITCH
15	010219	PULLEY, 8 V-BELT, 5/8 BORE
16	010218	SPEED REDUCER
17	010217	TORQUE LIMITER
18	010173	HANDY BOX, 1-7/8 DEEP
19	102735	HANDY BOX COVER WITH LABEL & SCREWS
20	010231	CLUTCH DISC

ARM KIT & CONTROL BOX EXPLODED VIEW & PARTS

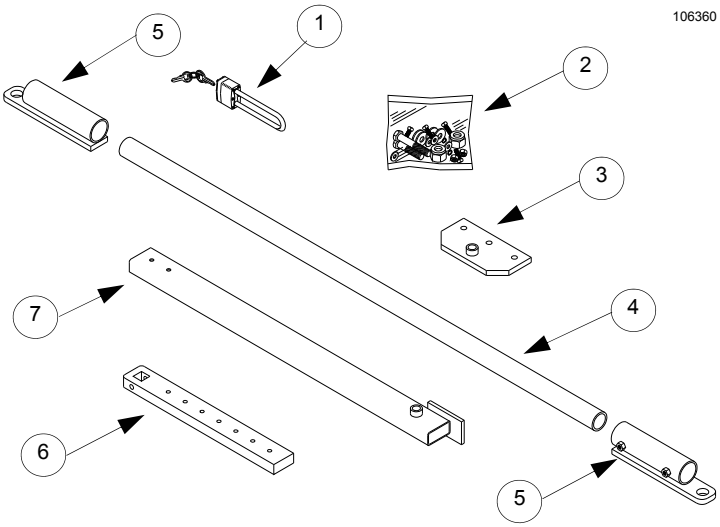

Figure 28: GS4000 Arm Kit Exploded View

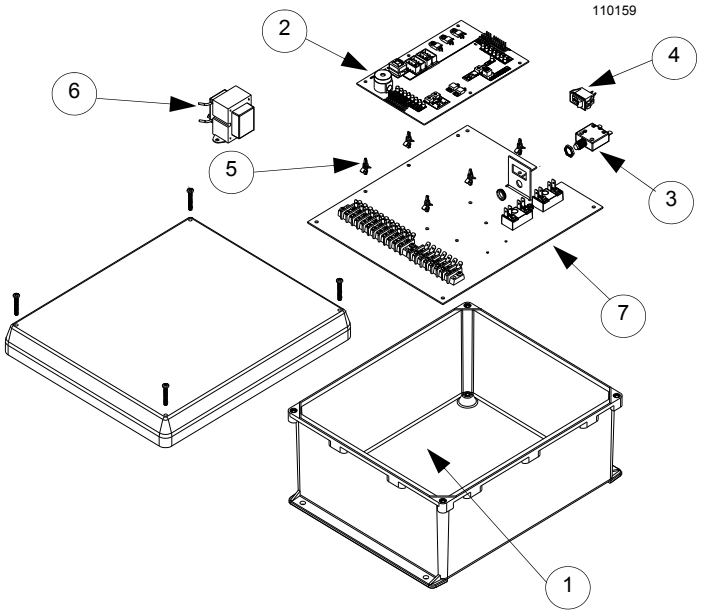

Figure 29: GS4000 Control Box Exploded View

ITEM #	PART #	DESCRIPTION
1	010667	PADLOCK WITH KEYS
2	102928	HARDWARE BAG, ARM KIT
3	104476	ARM BRACKET
4	104448	ARM
5	104475	ARM FITTING
6	104474	CRANK ARM
7	104473	CRANK ARM EXTENSION

ITEM #	PART #	DESCRIPTION
1	109966	CONTROL BOX W/COVER
2	110074	CONTROL BOARD
3	100997	CIRCUIT BREAKER
4	010412	ON/OFF SWITCH
5	100050	PCB STANDOFFS
6	005244	115 VOLT TRANSFORMER
7	109971	COMPLETE PLATE ASSEMBLY

TECHNICAL SPECIFICATIONS

PHYSICAL

PAD: *24W x 30D x 3H*

OVERHEAD CLEARANCE: *21 Inch Minimum*

UNIT SIZE: *16-1/8 x 24-7/8 x 17-1/4*

FRAME: *Welded steel, Coated to UL Standards*

COVER: *Molded Polyethylene*

SHIPPING WEIGHT: *150 lbs.*

ELECTRICAL

PRIMARY VOLTAGE: *115 VAC, 60 Hz*

ELECTRICAL SOURCE: *One 3-Wire 15 AMP Service per*

CONTROL VOLTAGE: *12/24 VDC*

RADIO RECEIVER POWER: *24 VAC*

MOTOR: *1/2 HP, 4.4 AMP PSC, Instant Reversing*

DRIVE

DRIVE SYSTEM: *60:1 Gearbox*

TORQUE LIMITER: *Mounted on Output Shaft,*

OUTPUT SHAFT: *1-1/4 Diameter Ball-Bearing Mounted*

LIMITS: *Independent Open & Close; Displaced Cam with Micro Switch*

CAPACITIES

MAX. GATE WEIGHT: *1000 lbs.*

MAX. GATE WIDTH: *18 Feet*

MAX. CYCLES PER HOUR: *60 Open/Close per Hour*
1200 Open/Close per Day

GATE SPEED: *13-15 Seconds for 90º Opening*

Specifications subject to change without notice. Consult the factory.

Manufacturer's Limited Warranty

Linear LLC warrants its Allstar brand gate operators to be free from defect in material and workmanship for a period of five (5) years from the date of purchase for single family home use and three (3) years from the date of purchase for multi-family and commercial use. This warranty covers all components except the electronic circuit boards which are warranted for three (3) years from the date of purchase for single family home use and two (2) years from the date of purchase for multi-family and commercial use. To obtain service contact your dealer.

To obtain service under this warranty the buyer must obtain authorization instructions for the return of any goods from Linear before returning the goods. The goods must be returned with complete identification, with copy of proof-of-purchase, freight prepaid and in accordance with Linear's instructions or they will not be accepted. In no event will Linear be responsible for goods returned without proper authorization or identification.

Goods returned to Linear for warranty repair within the warranty period, which upon receipt by Linear are confirmed to be defective and covered by this limited warranty, will be repaired or replaced at Linear's sole option, at no cost and returned pre-paid. Defective parts will be repaired or replaced with new or factory rebuilt parts at Linear's sole option.

This limited warranty does not cover non-defect damage, damage caused by unreasonable use, damage caused by improper installation or care, vandalism or lightning, fire or excessive heat, flood or other acts of God (including, but not limited to misuse, abuse or alterations, failure to provide reasonable and necessary maintenance), labor charges for dismantling or reinstalling a repaired or replaced unit, or replacement batteries.

These warranties are in lieu of all other warranties, either expressed or implied. All implied warranties of merchantability and/or fitness for a particular purpose are hereby disclaimed and excluded. Under no circumstances shall Linear be liable for consequential, incidental or special damages arising in connection with the use or inability to use this product. In no event shall Linear's liability for breach of warranty, breach of contract, negligence or strict liability exceed the cost of the product covered hereby. No person is authorized to assume for the Linear any other liability in connection with the sale of this product.

This warranty gives you specific legal rights. You may also have other rights which vary from state to state. Warranty effective after October 1st, 2007.

For Information:
877-441-9300 800-421-1587 www.allstarcorp.com

This Gate Operator is built in the USA and complies with all requirements of ANSI/UL Standard 325.

Copyright © 2007 Linear LLC