BEYOND SECURITY KABA®

Mechanical Lock
Parts Price Book

Effective May 1, 2015

How to Order

Step A Locate the part you are looking to replace in the appropriate exploded view drawing. Each part is given an item number.

Step B Find the item number in the left column of the appropriate chart and determine part number.

Step C If the description of your part also includes additional item numbers in parentheses, those items combine to make a kit. When ordering, please note that the part number listed for this item includes all items listed in the description. (Note: The additional item numbers in parentheses also reference parts in the exploded view drawing.)

Example:

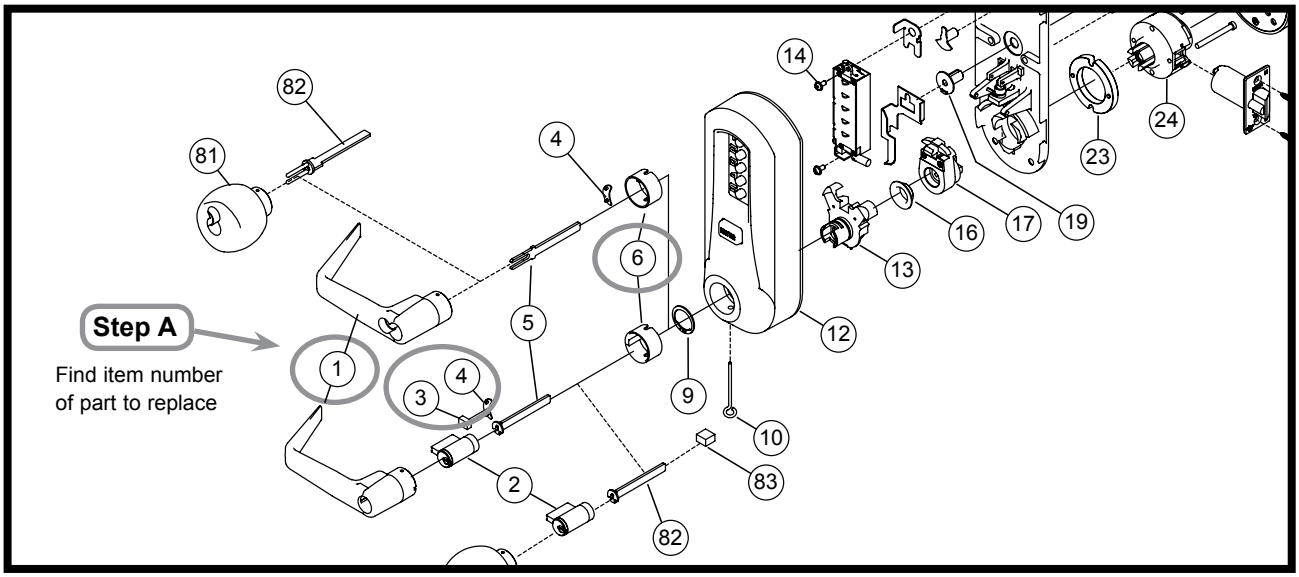

Step B Find item and part numbers in chart

Step C Item number in parenthesis indicate additional items included with part

Item	Qty/Lock	Description	Finish	Part Number	List Price (USD)
1	1	Outside Lever, KIL (Includes 1 ea. #1, #3, #4, #6)	Satin Chrome	3422926D01	$75.00
		Outside Lever, KIL (Includes 1 ea. #1, #3, #4, #6)	Bright Brass	342290301	$75.00
		Outside Lever, KIL (Includes 1 ea. #1, #3, #4, #6)	Satin Brass	342290401	$75.00
		Outside Lever, KIL (Includes 1 ea. #1, #3, #4, #6)	Dark Bronze	3422974401	$75.00
		Outside Lever, KIL (Includes 1 ea. #1, #3, #4, #6)	Bright Chrome	3422926D01	$75.00
		Outside Lever, Schlage (Includes 1 ea. #1, #4, #6)	Satin Chrome	3423026D01	$100.00

Where to Order

Contact your local supplier or call 1.800.849.8324 or 1.336.725.1331

For More Information

www.kaba-adsamericas.com

Table of Contents

Page

Simplex® 5000

Simplex® 1000

Simplex® 2015

Simplex® 3000

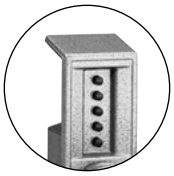

Simplex® 6200

Simplex® 900

Terms and Conditions	2-3
Simplex 5000 Series Cylindrical (Manufactured after March 2005)	4-8
Simplex 5000 Series Cylindrical (Manufactured Prior to April 2005)	9-12
Simplex 5010 Series Exit Trim	13-15
Simplex 1000 Series	16-23
Simplex L1000 Series	24-32
Simplex EE1000 Series	33-35
Simplex 8100 Series	36-41
Simplex LP1000 Series	42-43
Simplex 2015 Series	44-45
Simplex 3000 Series	46-49
Simplex 6200 Series	50-51
Simplex 7100 Series	52-54
Simplex 900 Series	55-58
9600 Series	59-61
File Guard Series	62
LD450 and LD470 Series	63
Index	64-71
Simplex 5000 Enter Button Service Kit Bulletin	72
L1000 Service Kits Bulletin	73

General Terms and Conditions of Sale

1. **ENTIRE AGREEMENT:** This Agreement constitutes the entire agreement between KABA ILCO Corp. dba Kaba Access Control ("KABA") and the Purchaser, and contains all of the terms and conditions relating to the sale of the product(s). This agreement supersedes all prior agreements, previous catalog terms and conditions, and other documents unless expressly incorporated herein

2. **PAYMENT TERMS:** Unless otherwise stated, terms are net 30 days from the date of invoice. KABA reserves the right to charge interest at 1.5% per month (18% annually) on any overdue amounts. If KABA discovers that the Purchaser's financial condition does not warrant the above payment terms, then KABA, in its absolute discretion, may demand that the Purchaser pay in advance, pay cash upon delivery, or refuse Purchaser's order. In the latter case, KABA cannot be held liable for any damages of any nature whatsoever for its refusal to deliver goods in whole or in part.

3. **PRICES:** The product price(s) shall be according to KABA's price list in effect at the time of acceptance of the purchase order or according to its authorized quotation in force at the time of acceptance of the applicable purchase order.

4. **TAXES:** The price does not include any amounts for U.S. or International Federal Custom Duties, Canadian, U.S. or International, Federal, Provincial, State, Local Excise, Goods and Services, Sales or Use, or Value added taxes. However, should KABA be obligated to pay any of the foregoing taxes, the Purchaser, upon demand, shall, within fifteen (15) days, reimburse KABA the total amount disbursed in respect thereof.

5. **MINIMUM ORDER REQUIREMENTS: The minimum order amount for all orders accepted is $400 USD**, excluding the shipping and insurance charges. This does not apply to cut keys.

6. **PRODUCT INFORMATION:** Unless expressly stated in this Agreement, all information contained in the product brochures, pamphlets, or information circulars, are for reference purposes only and based on information available at time of publication. KABA reserves the right to make reasonable changes in its products or discontinue certain products from time to time and to deliver the modified products, or to offer replacement product in the event a product has been discontinued without any liability whatsoever. Purchaser shall have the option to purchase any other product in the event of a discontinued product, provided however, Purchaser shall be responsible to pay any price difference.

7. **INSTALLATION:** Unless otherwise expressly stated, the costs and materials required for installation are not included in the prices and/or quotations.

8. **POINT OF DELIVERY & SHIPPING:** Delivery points and terms are FOB KABA warehouses in the Continental USA and Canada for KABA products. Should Purchaser request a shipping method or carrier different than KABA's standard, then the full amount of the shipping cost will be invoiced to the Purchaser. Drop shipments to a third party are subject to a $25 surcharge, which is invoiced to Purchaser. Kaba will no longer ship to third parties in Canada.

9. **DELIVERY TERMS:** KABA will notify the Purchaser if for any reason, it is unable to deliver the products as scheduled, and Kaba cannot be held liable for any damages of any nature resulting from these delays.

10. **FORCE MAJEURE:** Should a delay in delivery be caused by a Force Majeure event, the time of delivery shall be extended by a reasonable amount of time with regard to all applicable circumstances. Upon mutual agreement, the parties shall set a new date for delivery. Except as to payments due hereunder, neither party shall be liable for failure to perform hereunder for the duration of and to the extent such failure is occasioned by a Force Majeure event, which is defined as follows: war, riots, insurrections, fire, flood, explosions, strikes and other labor or industrial disturbances, inevitable accidents, Government, State, Provincial or Municipal regulations and/or ordinances, an act of God, embargoes, blockades, delay in obtaining materials, legal restrictions, currency regulations, or any cause or condition beyond the reasonable control of the parties. Where such conditions continue for more than three (3) months, either party shall be free to terminate the Agreement. In the case of termination, KABA shall be paid the value proportionate to the Agreement price for the finished product and/or the work-in-progress as of the date of termination and the supportable costs.

11. **FAILURE TO ACCEPT DELIVERY:** If Purchaser fails to accept delivery at the scheduled time, the purchase price shall become due and payable in accordance with the original payment schedule and all risks associated with the product or parts of the product to be delivered, shall be borne by the Purchaser. Purchaser shall be responsible for all storage and handling costs incurred and to be incurred as a result thereof.

12. **TITLE:** Unless otherwise stipulated in this Agreement, ownership of the goods shall remain with KABA until full payment of the sale price has been received. Until complete payment has been received, Purchaser undertakes to warrant and keep the goods free and clear of all liens, other charges or encumbrances.

13. **RETURN POLICY:** Purchaser must obtain a Return Goods Authorization (RGA) number from KABA's Customer Service by calling in North America: (800) 849-8324 or Worldwide: (336) 725-1331, before returning any products whatsoever. The Purchaser must have the product serial number and invoice number pertaining to the original purchase available to give to the Customer Service Agent. KABA will send via Facsimile or email (as indicated by Purchaser) the Return Goods Authorization form, which includes the RGA number along with the "Ship To" address and RGA return instructions. RGAs expire after sixty (60) days from date of issuance. Returns of product by Purchaser are FOB KABA.

General Terms and Conditions of Sale (continued)

14. **WARRANTY:** Subject to the limitations herein, KABA warrants its new products from the date received by Purchaser from material or workmanship flaws. Specific new product warranties may vary according to products and if different, they are listed in the respective product section of the Access Control catalog or the respective product installation manual. Third party product(s) sold by KABA are warranted only to the extent provided by the original manufacturer's warranty and Purchaser must refer to the original manufacturer's warranty in such case. Refurbished or reconditioned KABA products are warranted for a ninety (90) day period from date of shipment. Failure of the Purchaser to notify KABA within the time limit set in this section shall constitute Purchaser's waiver to have the malfunction or damage remedied. The express warranties as set out herein, are the exclusive warranties given and accepted in lieu of any and all other warranties, expressed or implied, statutory or otherwise, including but not limited to warranty of fitness for a particular purpose and merchantability. To the extent that they cannot be disclaimed, the implied warranties are limited in duration to the life of the express warranty. Incidental and consequential damages are excluded from coverage under this warranty. Some States/jurisdictions do not allow for the disclaimers, limitations and exclusions identified above; as a result, they may not apply to you. This warranty gives you specific rights, and you may also have other legal rights which may vary from State to State, or from one jurisdiction to another. No distributor, dealer, sales representative nor any other person has been authorized to make any affirmation, representation or warranty regarding the product, other than those contained in this limited warranty, and if made, shall not be enforceable against KABA. KABA reserves the right to modify this warranty at any time, it being understood that such modification will not alter the warranty conditions applicable to the products sold while this warranty is in effect.

- KABA will, at their discretion and at no charge, either repair, exchange or replace the product provided it is returned complete to KABA during the warranty period. However, Purchaser is responsible for the labor to remove and reinstall the product(s) from Purchaser's premises.
- Defective parts, which have been replaced, become the property of KABA who may dispose of them in any manner. Replacement parts become the property of the Purchaser upon their delivery.
- KABA is not liable for any defects in materials, designs, drawings or information provided by the Purchaser, nor for information which is missing and could not be reasonably identified as such, by KABA.
- KABA does not warrant the following:
  - (a) Normal wear and tear from use;
  - (b) Printer ribbons, batteries, key cards and other consumable parts used or supplied with the product;
  - (c) Damage of any nature to hardware finishes;
  - (d) Faulty or defective product operation(s) caused by unusual or unforeseeable use or conditions;
  - (e) Improper installation, operation or maintenance of the product;
  - (f) Any product or system in which KABA's product(s) is incorporated;
  - (g) Force Majeure as defined by Section 10 of this Agreement;
  - (h) Repairs or alterations carried out by anyone other than KABA;

14.1 **VARIANCE:** Any claims that the quantity and description of goods delivered and the quantity and description of goods ordered do not conform to this Agreement are waived unless the Purchaser advises KABA's Customer Service department in writing, within fifteen (15) days from the date of receipt of the product(s).

14.2 **RETURNS FOR CREDIT:** In order to return new merchandise, the Purchaser must obtain a Returned Goods Authorization (RGA) number from KABA Customer Service department. There is a twenty-five percent (25%) restocking charge applied to all returns of new product. Custom products cannot be returned for credit for any reason other than product failure. Credit will not be offered for product that is returned incomplete or damaged.

15. **LIMITATION OF LIABILITY:** The total liability of KABA for all claims of any kind, whether in contract, liability or otherwise, arising out of, connected with or resulting from KABA's performance or breach of this Agreement or services furnished hereunder shall in no event exceed the total purchase price expressed in this Agreement. KABA shall not under any circumstances be held liable for loss of profits or revenues, loss of use of product or any other product software, system, or facility, loss of data or information, lack or loss of productivity, interest charges or cost of capital, cost of substitute product, software, systems or services, cost of purchases or replacement power, downtime costs. Incidental, special, consequential damages are excluded from coverage under this warranty.

16. **ASSIGNMENT:** KABA may assign this Agreement in whole or in part, to any parent, subsidiary or affiliated corporation. Subject to the prior written approval of KABA, Purchaser may assign the present Agreement to any parent, subsidiary or affiliated corporation.

17. **DAMAGES:** If Purchaser does not fulfill its obligations or is in default or breach of contract by the terms of this Agreement, KABA may then terminate the Agreement by notice in writing as set out on the face of KABA's acknowledgement. KABA has the right to claim compensation for any loss it incurs as a result of Purchaser's default, in addition to any other rights or recourse in equity and in law.

18. **APPLICABLE LAW:** This Agreement shall be governed by and construed in accordance with the laws of the State of North Carolina, USA.

19. **TERMINATION:** If the Purchaser terminates this Agreement, in whole or in part, by written notice, KABA will, upon receipt of the termination notice, cease the performance of the contract according to the instructions of the Purchaser. In such a case, Purchaser may be invoiced for costs incurred depending on the nature of the product and shall be responsible for payment of same.

20. **SEVERABILITY:** Any term, condition or provision of this Agreement, or any part thereof, which is or may be found to be prohibited or unenforceable in any jurisdiction shall, as regards such jurisdiction and to the extent of such prohibition or unenforceability, be deemed to be severed from this Agreement, and the remaining terms, conditions and provisions of this Agreement shall remain in full force and effect.

21. **WAIVER:** Any act or omission by KABA will not constitute or be deemed to be a waiver of the rights granted to KABA by the terms of this Agreement.

Disclaimer: While reasonable efforts were made to ensure the accuracy of this document at the time of printing, Kaba assumes no liability for any errors or omissions. This information is subject to be revised without notice, and changes may be incorporated in future releases.

Simplex 5000 Cylindrical

(Manufactured after March 2005)

Serial #'s WD to current

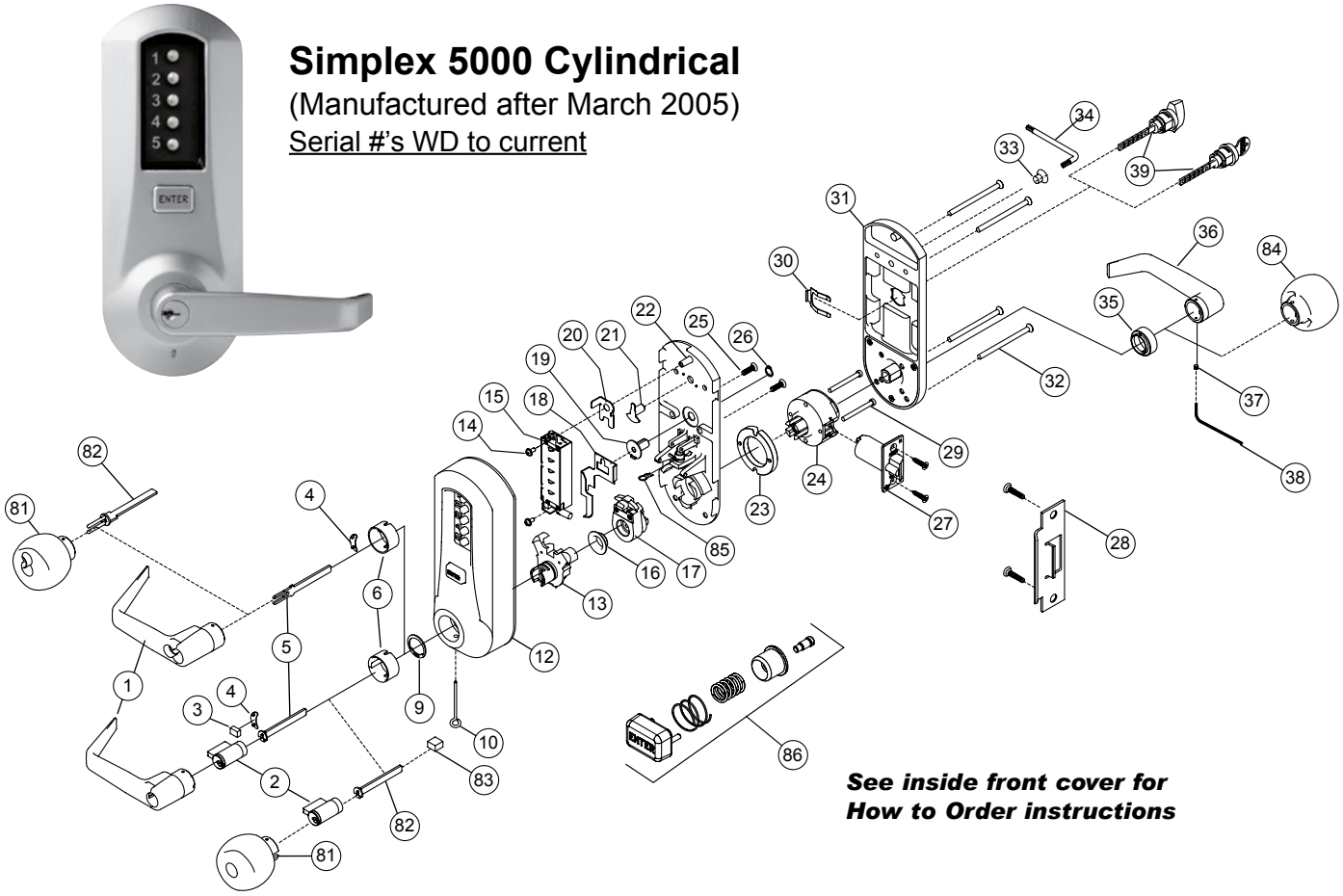

See inside front cover for How to Order instructions

Item	Qty/Lock	Description	Finish	Part Number	List Price
1	1	Outside Lever, KIL (Includes 1 ea. #1, #3, #4, #6)	Satin Chrome	3422926D01	$82.50
		Outside Lever, KIL (Includes 1 ea. #1, #3, #4, #6)	Bright Brass	342290301	$82.50
		Outside Lever, KIL (Includes 1 ea. #1, #3, #4, #6)	Satin Brass	342290401	$82.50
		Outside Lever, KIL (Includes 1 ea. #1, #3, #4, #6)	Dark Bronze	3422974401	$82.50
		Outside Lever, KIL (Includes 1 ea. #1, #3, #4, #6)	Bright Chrome	3422926D01	$82.50
		Outside Lever, Schlage (Includes 1 ea. #1, #4, #6)	Satin Chrome	3423026D01	$110.00
		Outside Lever, Schlage (Includes 1 ea. #1, #4, #6)	Bright Brass	342300301	$110.00
		Outside Lever, Schlage (Includes 1 ea. #1, #4, #6)	Satin Brass	342300401	$110.00
		Outside Lever, Schlage (Includes 1 ea. #1, #4, #6)	Dark Bronze	3423074401	$110.00
		Outside Lever, Schlage (Includes 1 ea. #1, #4, #6)	Bright Chrome	3423002601	$110.00
		Outside Lever, Corbin-Russwin (Includes 1 ea. #1, #4, #6)	Satin Chrome	3423126D01	$110.00
		Outside Lever, Corbin-Russwin (Includes 1 ea. #1, #4, #6)	Bright Brass	342310301	$110.00
		Outside Lever, Corbin-Russwin (Includes 1 ea. #1, #4, #6)	Satin Brass	342310401	$110.00
		Outside Lever, Corbin-Russwin (Includes 1 ea. #1, #4, #6)	Dark Bronze	3423174401	$110.00
		Outside Lever, Corbin-Russwin (Includes 1 ea. #1, #4, #6)	Bright Chrome	3423102601	$110.00
		Outside Lever, Sargent (Includes 1 ea. #1, #4, #6)	Satin Chrome	3423226D01	$120.00
		Outside Lever, Sargent (Includes 1 ea. #1, #4, #6)	Bright Brass	342320301	$110.00

Simplex 5000 (Manufactured after March 2005) *(continued)*

Item	Qty/Lock	Description	Finish	Part Number	List Price
1	1	Outside Lever, Sargent (Includes 1 ea. #1, #4, #6)	Satin Brass	342320401	$110.00
		Outside Lever, Sargent (Includes 1 ea. #1, #4, #6)	Dark Bronze	3423274401	$110.00
		Outside Lever, Sargent (Includes 1 ea. #1, #4, #6)	Bright Chrome	3423202601	$110.00
		Outside Lever, Best (Includes 1 ea. #1, #4, #6)	Satin Chrome	3423326D01	$110.00
		Outside Lever, Best (Includes 1 ea. #1, #4, #6)	Bright Brass	342330301	$110.00
		Outside Lever, Best (Includes 1 ea. #1, #4, #6)	Satin Brass	342330401	$110.00
		Outside Lever, Best (Includes 1 ea. #1, #4, #6)	Dark Bronze	3423374401	$110.00
		Outside Lever, Best (Includes 1 ea. #1, #4, #6)	Bright Chrome	3423302601	$110.00
		Outside Lever, Assa/Medeco/Yale (Includes 1 ea. #1, #4, #6)	Satin Chrome	3423426D01	$110.00
		Outside Lever, Assa/Medeco/Yale (Includes 1 ea. #1, #4, #6)	Bright Brass	342340301	$110.00
		Outside Lever, Assa/Medeco/Yale (Includes 1 ea. #1, #4, #6)	Satin Brass	342340401	$110.00
		Outside Lever, Assa/Medeco/Yale (Includes 1 ea. #1, #4, #6)	Dark Bronze	3423474401	$110.00
		Outside Lever, Assa/Medeco/Yale (Includes 1 ea. #1, #4, #6)	Bright Chrome	3423402601	$110.00
2	1	Kaba KIL Cylinder (w/keys), Keyed Differently	Satin Chrome	5456226D01	$42.00
		Kaba KIL Cylinder (w/keys), Keyed Differently	Satin Brass	545620401	$42.00
		Schlage KIL Cylinder (w/keys), Keyed Differently	Satin Chrome	5456826D01	$42.00
		Schlage KIL Cylinder (w/keys), Keyed Differently	Satin Brass	545680401	$42.00
		KABA90 Key Blank, 50/Box		KABA90	$128.00
3	1	Cylinder Keeper - Lever Sleeve Accessory Kit, KIL (Includes 1 ea. #3, #4, #6, #83)		6470600001	$15.50
4	1	Outside Lever Insert (10 Pack)		5452700010	$11.00
5	1	Tailpiece Kit, KIL (Includes 5 tailpieces - fits various cylinders) (K1 to K5)		7489200001	$17.50
		Tailpiece Kit, Best (6 and 7-pin) (C-6 and C-7)		6472400001	$13.00
		Tailpiece Kit, Corbin-Russwin/Sargent (C-3)		2447100001	$13.00
		Tailpiece Kit, Assa/Medeco/Yale (5/6/7-pin) (C-2)		7483600001	$13.00
		Tailpiece Kit, Schlage (C-1)		5461800001	$13.00
6	1	Lever Sleeve - Lever Sleeve Accessory Kit, KIL (Includes 1 ea. #3, #4, #6, #83)		6470600001	$15.50
		Lever Sleeve - Lever Sleeve Accessory Kit, IC (Includes 1 ea. #4, #6)		6470700001	$15.50
9	1	External Retaining Ring (10 Pack)		5451700010	$11.00
10	1	Lever Release Tool - Accessory Tool Kit (Includes 1 ea. #10, #38)		6471700001	$11.00
12	1	Outside Housing, Exterior Code Change (Includes code buttons and enter button)	Satin Chrome	7495626D01	$154.00
		Outside Housing, Exterior Code Change (Includes code buttons and enter button)	Bright Brass	749560301	$154.00
		Outside Housing, Exterior Code Change (Includes code buttons and enter button)	Satin Brass	749560401	$154.00
		Outside Housing, Exterior Code Change (Includes code buttons and enter button)	Dark Bronze	7495674401	$154.00
		Outside Housing, Exterior Code Change (Includes code buttons and enter button)	Wrinkle Black	7495608301	$154.00
		Outside Housing, Exterior Code Change (Includes code buttons and enter button)	Bright Chrome	7495602601	$154.00
		Outside Housing, Interior Code Change (Includes code buttons and enter button)	Satin Chrome	7496026D01	$154.00
12	1	Outside Housing, Interior Code Change (Includes code buttons and enter button)	Bright Brass	749600301	$154.00
		Outside Housing, Interior Code Change (Includes code buttons and enter button)	Satin Brass	749600401	$154.00
		Outside Housing, Interior Code Change (Includes code buttons and enter button)	Dark Bronze	7496074401	$154.00
		Outside Housing, Interior Code Change (Includes code buttons and enter button)	Wrinkle Black	7496008301	$154.00
		Outside Housing, Interior Code Change (Includes code buttons and enter button)	Bright Chrome	7496002601	$154.00
13	1	Outside Driver Assembly (Includes 1 ea. of #9, #13)		7495400001	$39.50
14	2	Screw, #6-32 x 5/16", Pan hd, SEM - Screw Pack (10 ea. 6-32 x 3/8", 5/16", 7/16")		6477600001	$11.00
15	1	Combination Chamber		7483200001	$90.00
16	1	Driver Bearing (10 Pack)		3418900010	$11.00
17	1	Extension Sleeve Assembly (Fits standard or passage mode)		7490000001	$31.00
18	1	Passage Actuator Plate - Passage Kit (Includes 1 ea. #18, #19, #26)		6474700001	$17.50
19	1	Passage Actuator Cam - Passage Kit (Includes 1 ea. #18, #19, #26)		6474700001	$17.50

Simplex 5000 (Manufactured after March 2005) *(continued)*

Item	Qty/Lock	Description	Finish	Part Number	List Price
20	1	Interior Code Change Bracket - Interior Code Change Actuator Kit (Includes 1 ea. #20, #21)		6474800001	$13.00
21	1	Interior Code Change Actuator - Interior Code Change Actuator Kit (Includes 1 ea. #20, #21)		6474800001	$13.00
22	1	Outside Base Assembly without Chamber (Fits standard or passage mode)		7520700001	$77.00
23	1	1/4" Spacer (Includes 2 ea. #23, #29)		6471200001	$11.00
24	1	Cylindrical Drive Unit Assembly (CDU)		7484100001	$53.00
25	2	Outside Base Screw (10 Pack)		5446100010	$11.00
26	1	Retaining Ring (10 Pack)		20144000010	$11.00
27	1	Latch 1/2" Floating Face, 2 3/4" Backset - 3 Hour Fire Rated (Includes Screws)	Satin Chrome	20416826D01	$38.50
		Latch 1/2" Floating Face, 2 3/4" Backset - 3 Hour Fire Rated (Includes Screws)	Bright Brass	2041680301	$38.50
		Latch 1/2" Floating Face, 2 3/4" Backset - 3 Hour Fire Rated (Includes Screws)	Satin Brass	2041680401	$38.50
		Latch 1/2" Floating Face, 2 3/4" Backset - 3 Hour Fire Rated (Includes Screws)	Dark Bronze	20416874401	$38.50
		Latch 3/4" Floating Face, 2 3/4" Backset - 3 Hour Fire Rated (Includes Screws)	Satin Chrome	20114426D01	$66.00
		Latch 3/4" Floating Face, 2 3/4" Backset - 3 Hour Fire Rated (Includes Screws)	Bright Brass	2011440301	$66.00
		Latch 3/4" Floating Face, 2 3/4" Backset - 3 Hour Fire Rated (Includes Screws)	Dark Bronze	20114474401	$66.00
		Latch 1/2" Floating Face, 2 3/8" Backset - 3 Hour Fire Rated (Includes Screws)	Satin Chrome	751852601	$38.50
		Latch 1/2" Floating Face, 2 3/8" Backset - 3 Hour Fire Rated (Includes Screws)	Bright Brass	751850301	$38.50
		Latch 1/2" Floating Face, 2 3/8" Backset - 3 Hour Fire Rated (Includes Screws)	Satin Brass	751850401	$38.50
		Latch 1/2" Floating Face, 2 3/8" Backset - 3 Hour Fire Rated (Includes Screws)	Dark Bronze	7518574401	$38.50
28	1	ASA Strike Kit 4 7/8" Long (124 mm) (Includes Screws)	Satin Chrome	20411926D01	$12.00
		ASA Strike Kit 4 7/8" Long (124 mm) (Includes Screws)	Bright Brass	2041190301	$12.00
		ASA Strike Kit 4 7/8" Long (124 mm) (Includes Screws)	Satin Brass	2041190401	$12.00
		ASA Strike Kit 4 7/8" Long (124 mm) (Includes Screws)	Dark Bronze	20411974401	$20.00
		Standard “T" Strike Plate Kit (Includes Screws)	Satin Chrome	20422726D01	$11.00
		Standard “T" Strike Plate Kit (Includes Screws)	Bright Brass	2042270301	$11.00
		Standard “T" Strike Plate Kit (Includes Screws)	Satin Brass	2042270401	$11.00
		Standard “T" Strike Plate Kit (Includes Screws)	Dark Bronze	20422774401	$20.00
29	2	Connecting Screw, Phillips 8-32 X 1 3/8" (Includes 2 ea. #23, #29)		6471200001	$11.00
30	1	Passage Spring Clip (10 Pack)		20174000010	$11.00
31	1	Inside Housing Assembly, Complete	Satin Chrome	7484426D01	$93.50
		Inside Housing Assembly, Complete	Bright Brass	748440301	$93.50
		Inside Housing Assembly, Complete	Satin Brass	748440401	$93.50
		Inside Housing Assembly, Complete	Dark Bronze	7484474401	$93.50
		Inside Housing Assembly, Complete	Wrinkle Black	7484408301	$93.50
		Inside Housing Assembly, Complete	Bright Chrome	7484402601	$93.50
		Inside Housing Assembly, Complete, Interior Code Change	Satin Chrome	7487626D01	$110.00
		Inside Housing Assembly, Complete, Interior Code Change	Bright Brass	748760301	$110.00
		Inside Housing Assembly, Complete, Interior Code Change	Satin Brass	748760401	$110.00
		Inside Housing Assembly, Complete, Interior Code Change	Dark Bronze	7487674401	$110.00
		Inside Housing Assembly, Complete, Interior Code Change	Wrinkle Black	7487608301	$110.00
		Inside Housing Assembly, Complete, Interior Code Change	Bright Chrome	7487602601	$110.00
		Inside Housing Assembly, Complete, Passage	Satin Chrome	7490426D01	$110.00
		Inside Housing Assembly, Complete, Passage	Bright Brass	749040301	$110.00
		Inside Housing Assembly, Complete, Passage	Satin Brass	749040401	$110.00
		Inside Housing Assembly, Complete, Passage	Dark Bronze	7490474401	$110.00
		Inside Housing Assembly, Complete, Passage	Wrinkle Black	7490408301	$110.00
		Inside Housing Assembly, Complete, Passage	Bright Chrome	7490402601	$110.00
		Inside Housing Assembly, Complete, Interior Code Change w/ Passage	Satin Chrome	7492726D01	$121.00
		Inside Housing Assembly, Complete, Interior Code Change w/ Passage	Bright Brass	749270301	$121.00

Simplex 5000 (Manufactured after March 2005) *(continued)*

Item	Qty/Lock	Description	Finish	Part Number	List Price
31	1	Inside Housing Assembly, Complete, Interior Code Change w/ Passage	Satin Brass	749270401	$121.00
		Inside Housing Assembly, Complete, Interior Code Change w/ Passage	Dark Bronze	7492774401	$121.00
		Inside Housing Assembly, Complete, Interior Code Change w/ Passage	Wrinkle Black	7492708301	$121.00
		Inside Housing Assembly, Complete, Interior Code Change w/ Passage	Bright Chrome	7492702601	$121.00
32	4	Mounting Screw Kit (4 ea., 3 different lengths)	Satin Chrome	6475326D01	$16.50
		Mounting Screw Kit (4 ea., 3 different lengths)	Bright Brass	647530301	$16.50
33	1	Torx Screw - Interior Code Change Screw Kit (Includes 1 ea. #33, #34)		6475200001	$15.50
34	1	Torx Wrench - Interior Code Change Screw Kit (Includes 1 ea. #33, #34)		6475200001	$15.50
35	1	Housing Bearing (10 Pack)		3419100010	$11.00
36	1	Inside Lever Kit (Includes 1 ea. #36, #37, #38)	Satin Chrome	3418626D01	$60.50
		Inside Lever Kit (Includes 1 ea. #36, #37, #38)	Bright Brass	341860301	$60.50
		Inside Lever Kit (Includes 1 ea. #36, #37, #38)	Satin Brass	341860401	$60.50
		Inside Lever Kit (Includes 1 ea. #36, #37, #38)	Dark Bronze	3418674401	$60.50
		Inside Lever Kit (Includes 1 ea. #36, #37, #38)	Bright Chrome	3418602601	$60.50
37	2	Inside Lever Set Screw (10 Pack)		5446300010	$11.00
38	1	Hex Wrench - Accessory Tool Kit (Includes 1 ea. #10, #38)		6471700001	$11.00
39	1	Passage Thumbturn & Keyturn Kit (Includes 1 ea. #30, #39)	Satin Chrome	80127926D01	$48.50
		Passage Thumbturn & Keyturn Kit (Includes 1 ea. #30, #39)	Bright Brass	8012790301	$48.50
		Passage Thumbturn & Keyturn Kit (Includes 1 ea. #30, #39)	Satin Brass	8012790401	$48.50
81	1	Outside Knob, KIK (Includes 1 ea. #6, #81, #83)	Satin Chrome	3424626D01	$82.50
		Outside Knob, KIK (Includes 1 ea. #6, #81, #83)	Bright Brass	342460301	$82.50
		Outside Knob, KIK (Includes 1 ea. #6, #81, #83)	Satin Brass	342460401	$82.50
		Outside Knob, KIK (Includes 1 ea. #6, #81, #83)	Dark Bronze	3424674401	$82.50
		Outside Knob, KIK (Includes 1 ea. #6, #81, #83)	Bright Chrome	3424602601	$82.50
		Outside Knob, Corbin-Russwin (Includes 1 ea. #6, #81)	Satin Chrome	3424426D01	$110.00
		Outside Knob, Corbin-Russwin (Includes 1 ea. #6, #81)	Bright Brass	342440301	$110.00
		Outside Knob, Corbin-Russwin (Includes 1 ea. #6, #81)	Satin Brass	342440401	$110.00
		Outside Knob, Corbin-Russwin (Includes 1 ea. #6, #81)	Dark Bronze	3424474401	$110.00
		Outside Knob, Corbin-Russwin (Includes 1 ea. #6, #81)	Bright Chrome	3424402601	$110.00
		Outside Knob, Sargent (Includes 1 ea. #6, #81)	Satin Chrome	3424526D01	$110.00
		Outside Knob, Sargent (Includes 1 ea. #6, #81)	Bright Brass	342450301	$110.00
		Outside Knob, Sargent (Includes 1 ea. #6, #81)	Satin Brass	342450401	$110.00
		Outside Knob, Sargent (Includes 1 ea. #6, #81)	Dark Bronze	3424574401	$110.00
		Outside Knob, Sargent (Includes 1 ea. #6, #81)	Bright Chrome	3424502601	$110.00
		Outside Knob, Best (Includes 1 ea. #6, #81)	Satin Chrome	3424826D01	$110.00
		Outside Knob, Best (Includes 1 ea. #6, #81)	Bright Brass	342480301	$110.00
		Outside Knob, Best (Includes 1 ea. #6, #81)	Satin Brass	342480401	$110.00
		Outside Knob, Best (Includes 1 ea. #6, #81)	Dark Bronze	3424874401	$110.00
		Outside Knob, Best (Includes 1 ea. #6, #81)	Bright Chrome	3424802601	$110.00
		Outside Knob, Schlage (Includes 1 ea. #6, #81)	Satin Chrome	3424926D01	$110.00
		Outside Knob, Schlage (Includes 1 ea. #6, #81)	Bright Brass	342490301	$110.00
		Outside Knob, Schlage (Includes 1 ea. #6, #81)	Satin Brass	342490401	$110.00
		Outside Knob, Schlage (Includes 1 ea. #6, #81)	Dark Bronze	3424974401	$110.00
		Outside Knob, Schlage (Includes 1 ea. #6, #81)	Bright Chrome	3424902601	$110.00
		Outside Knob, Assa/Medeco/Yale (Includes 1 ea. #6, #81)	Satin Chrome	3425026D01	$110.00
		Outside Knob, Assa/Medeco/Yale (Includes 1 ea. #6, #81)	Bright Brass	342500301	$110.00
		Outside Knob, Assa/Medeco/Yale (Includes 1 ea. #6, #81)	Satin Brass	342500401	$110.00
		Outside Knob, Assa/Medeco/Yale (Includes 1 ea. #6, #81)	Dark Bronze	3425074401	$110.00

Simplex 5000 (Manufactured after March 2005) *(continued)*

Item	Qty/Lock	Description	Finish	Part Number	List Price
81	1	Outside Knob, Assa/Medeco/Yale (Includes 1 ea. #6, #81)	Satin Chrome	3425002601	$110.00
82	1	Tailpiece Kit, KIK - Includes 5 tailpieces - fits various cylinders (K1 to K5)		7489200001	$17.50
		Tailpiece Kit, Best (Knob Only) 6 and 7-pin (B)		7498800001	$13.00
		Tailpiece Kit, Corbin-Russwin (Knob Only) (C)		7498900001	$13.00
		Tailpiece Kit, Sargent (Knob Only) (R)		7499000001	$13.00
		Tailpiece Kit, Assa/Medeco/Yale (Knob Only) (C-2)		7498700001	$13.00
		Tailpiece Kit, Schlage (Knob Only) (C-1)		5461800001	$13.00
83	1	Cylinder Keeper, Knob - Lever Sleeve Accessory Kit, KIL (Includes 1 ea. #3, #4, #6, #83)		6470600001	$15.50
84	1	Inside Knob Kit (Includes 1 ea. #37, #38, #84)	Satin Chrome	3424726D01	$60.50
		Inside Knob Kit (Includes 1 ea. #37, #38, #84)	Bright Brass	342470301	$60.50
		Inside Knob Kit (Includes 1 ea. #37, #38, #84)	Satin Brass	342470401	$60.50
		Inside Knob Kit (Includes 1 ea. #37, #38, #84)	Dark Bronze	3424774401	$60.50
		Inside Knob Kit (Includes 1 ea. #37, #38, #84)	Bright Chrome	3424702601	$60.50
85	1	Actuator Button Spring (10 Pack)		5451400010	$15.50
86	1	Enter Button Assembly Kit (2 kits per box; includes 2 enter buttons, 2 lever buttons, 3 screws, instructions, 2 outside springs, 2 inside springs, 1 installation gauge, 1 screwdriver)	Satin Chrome	6485826D01	$78.00
		Enter Button Assembly Kit (2 kits per box; includes 2 enter buttons, 2 lever buttons, 3 screws, instructions, 2 outside springs, 2 inside springs, 1 installation gauge, 1 screwdriver)	Bright Brass	648580301	$78.00
		Enter Button Assembly Kit (2 kits per box; includes 2 enter buttons, 2 lever buttons, 3 screws, instructions, 2 outside springs, 2 inside springs, 1 installation gauge, 1 screwdriver)	Satin Brass	648580401	$78.00

Additional Kits and Accessories

		Installation Hardware Kit (Includes 1 ea. #3, #4, #10, #23, #38; 2 ea. #37; 4 ea. #32)	Satin Chrome	7485926D01	$31.00
		Installation Hardware Kit (Includes 1 ea. #3, #4, #10, #23, #38; 2 ea. #37; 4 ea. #32)	Bright Brass	748590301	$31.00
		Product Documentation Kit		PKG2863	$16.50
		Lubriplate Aero Grease Tubes		6475400001	$14.50
		Lever Return Spring (Fits inside and outside driver) (10 Pack)		5448200010	$22.00
		Tamper Proof Screw Kit (4 ea., 3 lengths) (Includes Wrench)	Satin Chrome	6468326D01	$24.00
		Tamper Proof Screw Kit (4 ea., 3 lengths) (Includes Wrench)	Bright Brass	646830301	$24.00
		Latch Extension Assembly - Converts to 3 3/4" (95mm) backset		20402200001	$35.00
		Latch Extension Assembly - Converts to 5" (130mm) backset		20402300001	$31.00

Note:
- For kit items that show additional reference #s in parentheses, the quantity required for one lock is included in kit.
- Lubriplate Aero grease is the “only" lubricant that should be used.
- Enter button kits (#86) retro fits all production models.

Parts availability may be limited on older component parts no longer used in production units.

Simplex 5000 Cylindrical

(Manufactured Prior to April 2005)

*Serial #'s UB-through WC

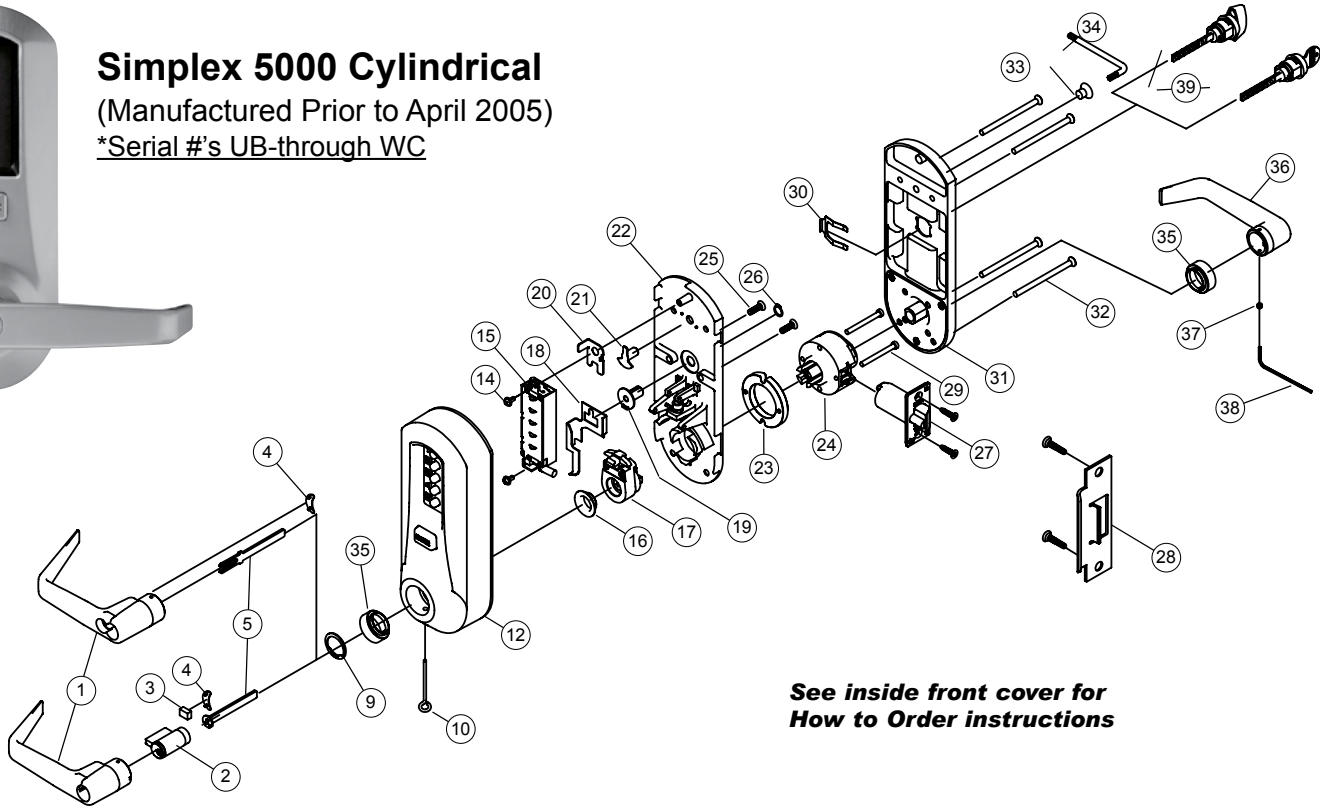

See inside front cover for How to Order instructions

Item	Qty/Lock	Description	Finish	Part Number	List Price
1	1	Outside Lever, KIL - **No longer available - order 1 ea. #1, #6, #12, #13 from p. 4-5**	Satin Chrome	3419726D01	N/A
		Outside Lever, KIL - **No longer available - order 1 ea. #1, #6, #12, #13 from p. 4-5**	Bright Brass	341970301	N/A
		Outside Lever, KIL - **No longer available - order 1 ea. #1, #6, #12, #13 from p. 4-5**	Satin Brass	341970401	N/A
		Outside Lever, KIL - **No longer available - order 1 ea. #1, #6, #12, #13 from p. 4-5**	Dark Bronze	3419774401	N/A
		Outside Lever, Schlage - **No longer available - order 1 ea. #1, #6, #12, #13 from p. 4-5**	Satin Chrome	3419926D01	N/A
		Outside Lever, Schlage - **No longer available - order 1 ea. #1, #6, #12, #13 from p. 4-5**	Bright Brass	341990301	N/A
		Outside Lever, Schlage - **No longer available - order 1 ea. #1, #6, #12, #13 from p. 4-5**	Satin Brass	341990401	N/A
		Outside Lever, Schlage - **No longer available - order 1 ea. #1, #6, #12, #13 from p. 4-5**	Dark Bronze	3419974401	N/A
		Outside Lever, Corbin-Russwin - **No longer available - order 1 ea. #1, #6, #12, #13 from p. 4-5**	Satin Chrome	3420026D01	N/A
		Outside Lever, Corbin-Russwin - **No longer available - order 1 ea. #1, #6, #12, #13 from p. 4-5**	Bright Brass	342000301	N/A
		Outside Lever, Corbin-Russwin - **No longer available - order 1 ea. #1, #6, #12, #13 from p. 4-5**	Satin Brass	342000401	N/A
		Outside Lever, Corbin-Russwin - **No longer available - order 1 ea. #1, #6, #12, #13 from p. 4-5**	Dark Bronze	3420074401	N/A
		Outside Lever, Sargent - **No longer available - order 1 ea. #1, #6, #12, #13 from p. 4-5**	Satin Chrome	3420126D01	N/A
		Outside Lever, Sargent - **No longer available - order 1 ea. #1, #6, #12, #13 from p. 4-5**	Bright Brass	342010301	N/A
		Outside Lever, Sargent - **No longer available - order 1 ea. #1, #6, #12, #13 from p. 4-5**	Satin Brass	342010401	N/A
		Outside Lever, Sargent - **No longer available - order 1 ea. #1, #6, #12, #13 from p. 4-5**	Dark Bronze	3420174401	N/A
		Outside Lever, Best - **No longer available - order 1 ea. #1, #6, #12, #13 from p. 4-5**	Satin Chrome	3420326D01	N/A
		Outside Lever, Best - **No longer available - order 1 ea. #1, #6, #12, #13 from p. 4-5**	Bright Brass	342030301	N/A
		Outside Lever, Best - **No longer available - order 1 ea. #1, #6, #12, #13 from p. 4-5**	Satin Brass	342030401	N/A
		Outside Lever, Best - **No longer available - order 1 ea. #1, #6, #12, #13 from p. 4-5**	Dark Bronze	3420374401	N/A
		Outside Lever, Assa/Medeco/Yale - **No longer available - order 1 ea. #1, #6, #12, #13 from p. 4-5**	Satin Chrome	3420426D01	N/A
		Outside Lever, Assa/Medeco/Yale - **No longer available - order 1 ea. #1, #6, #12, #13 from p. 4-5**	Bright Brass	342040301	N/A
		Outside Lever, Assa/Medeco/Yale - **No longer available - order 1 ea. #1, #6, #12, #13 from p. 4-5**	Satin Brass	342040401	N/A
		Outside Lever, Assa/Medeco/Yale - **No longer available - order 1 ea. #1, #6, #12, #13 from p. 4-5**	Dark Bronze	3420474401	N/A

When ordering a replacement housing for locks produced prior to April 2005, you must order a new lever and lever sleeve accessory kit.

Simplex 5000 (Manufactured Prior to April 2005) *(continued)*

Item	Qty/Lock	Description	Finish	Part Number	List Price
2	1	Kaba KIL Cylinder (w/keys), Keyed Differently	Satin Chrome	5456226D01	$42.00
		Kaba KIL Cylinder (w/keys), Keyed Differently	Satin Brass	545620401	$42.00
		Schlage KIL Cylinder (w/keys), Keyed Differently	Satin Chrome	5456826D01	$42.00
		Schlage KIL Cylinder (w/keys), Keyed Differently	Satin Brass	545680401	$42.00
		KABA90 Key Blank, 50/Box		KABA90	$128.00
3	1	Cylinder Retainer (10 Pack)		5456900010	$11.00
4	1	Outside Lever Insert (10 Pack)		5452700010	$11.00
5	1	Tailpiece Kit, KIL (Includes 5 tailpieces - fits various cylinders) (K1 to K5)		7489200001	$17.50
		Tailpiece Kit, Best (6 and 7-pin) (C-6 and C-7)		6472400001	$13.00
		Tailpiece Kit, Corbin-Russwin/Sargent (C-3)		2447100001	$13.00
		Tailpiece Kit, Assa/Medeco/Yale (C-2)		7483600001	$13.00
		Tailpiece Kit, Schlage (C-1)		5461800001	$13.00
9	1	External Retaining Ring (10 Pack)		5451700010	$11.00
10	1	Lever Release Tool - Accessory Tool Kit (Includes 1 ea. #10, #38)		6471700001	$11.00
12	1	Outside Housing, Exterior Code Change with Driver - **No longer available - order 1 ea. #1, #6, #12, #13 from p. 4-5**	Satin Chrome	7495726D01	N/A
		Outside Housing, Exterior Code Change with Driver - **No longer available - order 1 ea. #1, #6, #12, #13 from p. 4-5**	Bright Brass	749570301	N/A
		Outside Housing, Exterior Code Change with Driver - **No longer available - order 1 ea. #1, #6, #12, #13 from p. 4-5**	Satin Brass	749570401	N/A
		Outside Housing, Exterior Code Change with Driver - **No longer available - order 1 ea. #1, #6, #12, #13 from p. 4-5**	Dark Bronze	7495774401	N/A
		Outside Housing, Exterior Code Change with Driver - **No longer available - order 1 ea. #1, #6, #12, #13 from p. 4-5**	Wrinkle Black	7495708301	N/A
		Outside Housing, Interior Code Change with Driver - **No longer available - order 1 ea. #1, #6, #12, #13 from p. 4-5**	Satin Chrome	7496126D01	N/A
		Outside Housing, Interior Code Change with Driver - **No longer available - order 1 ea. #1, #6, #12, #13 from p. 4-5**	Bright Brass	749610301	N/A
		Outside Housing, Interior Code Change with Driver - **No longer available - order 1 ea. #1, #6, #12, #13 from p. 4-5**	Satin Brass	749610401	N/A
		Outside Housing, Interior Code Change with Driver - **No longer available - order 1 ea. #1, #6, #12, #13 from p. 4-5**	Dark Bronze	7496174401	N/A
		Outside Housing, Interior Code Change with Driver - **No longer available - order 1 ea. #1, #6, #12, #13 from p. 4-5**	Wrinkle Black	7496108301	N/A
13	1	Outside Driver - **No longer available - order 1 ea. #1, #6, #12, #13 from p. 4-5**			N/A
14	2	Screw, #6-32 x 5/16", Pan hd, SEM - Screw Pack (10 ea. 6-32 x 3/8", 5/16", 7/16")		6477600001	$11.00
15	1	Combination Chamber		7483200001	$90.00
16	1	Driver Bearing (10 Pack)		3418900010	$11.00
17	1	Extension Sleeve Assembly (Fits standard or passage)		7490000001	$31.00
18	1	Passage Actuator Slide - Passage Kit (Includes 1 ea. #18, #19, #26)		6474700001	$17.50
19	1	Passage Actuator Cam - Passage Kit (Includes 1 ea. #18, #19, #26)		6474700001	$17.50
20	1	Interior Code Change Actuator - Interior Code Change Actuator Kit (Includes 1 ea. #20, #21)		6474800001	$13.00
21	1	Interior Code Change Actuator Cam - Interior Code Change Actuator Kit (Includes 1 ea. #20, #21)		6474800001	$13.00
22	1	Outside Base Assembly without chamber (Fits standard or passage mode)		7520700001	$77.00
23	1	1/4" Spacer (Includes 2 of each #23, #29)		6471200001	$11.00
24	1	Cylindrical Drive Unit Assembly (CDU)		7484100001	$53.00
25	2	Screw, #10-24 x .625" Phillips, Outside Base (10 Pack)		5446100010	$11.00
26	1	Retaining Ring (10 Pack)		20144000010	$11.00
27	1	Latch 1/2" Floating Face - 3 Hour Fire Rated (Includes Screws)	Satin Chrome	20416826D01	$38.50
		Latch 1/2" Floating Face - 3 Hour Fire Rated (Includes Screws)	Bright Brass	2041680301	$38.50
		Latch 1/2" Floating Face - 3 Hour Fire Rated (Includes Screws)	Satin Brass	2041680401	$38.50

When ordering a replacement housing for locks produced prior to April 2005, you must order a new lever and lever sleeve accessory kit.

Simplex 5000 (Manufactured Prior to April 2005) *(continued)*

Item	Qty/Lock	Description	Finish	Part Number	List Price
27	1	Latch 3/4" Floating Face - 3 Hour Fire Rated (Includes Screws)	Satin Chrome	20114426D01	$66.00
		Latch 3/4" Floating Face - 3 Hour Fire Rated (Includes Screws)	Bright Brass	2011440301	$66.00
		Latch 3/4" Floating Face - 3 Hour Fire Rated (Includes Screws)	Dark Bronze	20114474401	$66.00
28	1	ASA Strike Kit 4 7/8" Long (124 mm) (Includes Screws)	Satin Chrome	20411926D01	$12.00
		ASA Strike Kit 4 7/8" Long (124 mm) (Includes Screws)	Bright Brass	2041190301	$12.00
		ASA Strike Kit 4 7/8" Long (124 mm) (Includes Screws)	Satin Brass	2041190401	$12.00
		Standard “T" Strike Plate Kit (Includes Screws)	Satin Chrome	20422726D01	$11.00
		Standard “T" Strike Plate Kit (Includes Screws)	Bright Brass	2042270301	$11.00
		Standard “T" Strike Plate Kit (Includes Screws)	Satin Brass	2042270401	$11.00
29	2	Connecting Screw, Phillips 8-32 X 1 3/8" (Includes 2 ea. #23, #29)		6471200001	$11.00
		Connecting Screw, Phillips 8-32 X 1 5/8" (Includes 2 ea. #23, #29)		6471200001	$11.00
30	1	Passage Spring Clip (10 Pack)		20174000010	$11.00
31	1	Inside Housing Assembly, Complete	Satin Chrome	7484426D01	$93.50
		Inside Housing Assembly, Complete	Bright Brass	748440301	$93.50
		Inside Housing Assembly, Complete	Satin Brass	748440401	$93.50
		Inside Housing Assembly, Complete	Dark Bronze	7484474401	$93.50
		Inside Housing Assembly, Complete	Wrinkle Black	7484408301	$93.50
		Inside Housing Assembly, Complete, Interior Code Change	Satin Chrome	7487626D01	$110.00
		Inside Housing Assembly, Complete, Interior Code Change	Bright Brass	748760301	$110.00
		Inside Housing Assembly, Complete, Interior Code Change	Satin Brass	748760401	$110.00
		Inside Housing Assembly, Complete, Interior Code Change	Dark Bronze	7487674401	$110.00
		Inside Housing Assembly, Complete, Interior Code Change	Wrinkle Black	7487608301	$110.00
		Inside Housing Assembly, Complete, Passage	Satin Chrome	7490426D01	$110.00
		Inside Housing Assembly, Complete, Passage	Bright Brass	749040301	$110.00
		Inside Housing Assembly, Complete, Passage	Satin Brass	749040401	$110.00
		Inside Housing Assembly, Complete, Passage	Dark Bronze	7490474401	$110.00
		Inside Housing Assembly, Complete, Passage	Wrinkle Black	7490408301	$110.00
		Inside Housing Assembly, Complete, Interior Code Change w/ Passage	Satin Chrome	7492726D01	$121.00
		Inside Housing Assembly, Complete, Interior Code Change with Passage	Bright Brass	749270301	$121.00
		Inside Housing Assembly, Complete, Interior Code Change with Passage	Satin Brass	749270401	$121.00
		Inside Housing Assembly, Complete, Interior Code Change with Passage	Dark Bronze	7492774401	$121.00
		Inside Housing Assembly, Complete, Interior Code Change with Passage	Wrinkle Black	7492708301	$121.00
32	4	Mounting Screw Kit (4 ea. of 3 sizes)	Satin Chrome	6475326D01	$16.50
		Mounting Screw Kit (4 ea. of 3 sizes)	Bright Brass	647530301	$16.50
33	1	Torx Screw - Interior Code Change Screw Kit (Includes 1 ea. #33, #34)		6475200001	$15.50
34	1	Torx Wrench - Interior Code Change Screw Kit (Includes 1 ea. #33, #34)		6475200001	$15.50
35	2	Housing Bearing (10 Pack)		3419100010	$11.00
36	1	Inside Lever Kit (Includes 1 ea. #36, #37, #38)	Satin Chrome	3418626D01	$60.50
		Inside Lever Kit (Includes 1 ea. #36, #37, #38)	Bright Brass	341860301	$60.50
		Inside Lever Kit (Includes 1 ea. #36, #37, #38)	Satin Brass	341860401	$60.50
		Inside Lever Kit (Includes 1 ea. #36, #37, #38)	Dark Bronze	3418674401	$60.50
37	2	Inside Lever Set Screw (10 Pack)		5446300010	$11.00
38	1	Hex Wrench - Accessory Tool Kit (Includes 1 ea. #10, #38)		6471700001	$11.00
39	1	Passage Thumbturn & Keyturn Kit (Includes 1 ea. #30, #39)	Satin Chrome	80127926D01	$48.50
		Passage Thumbturn & Keyturn Kit (Includes 1 ea. #30, #39)	Bright Brass	8012790301	$48.50
		Passage Thumbturn & Keyturn Kit (Includes 1 ea. #30, #39)	Satin Brass	8012790401	$48.50

When ordering a replacement housing for locks produced prior to April 2005, you must order a new lever and lever sleeve accessory kit.

Simplex 5000 (Manufactured Prior to April 2005) *(continued)*

Additional Kits and Accessories

		Installation Hardware Kit (Includes 1 ea. #3, #4, #10, #23, #38; 2 ea. #37; 4 ea. #32)	Satin Chrome	7485926D01	$31.00
		Installation Hardware Kit (Includes 1 ea. #3, #4, #10, #23, #38; 2 ea. #37; 4 ea. #32)	Bright Brass	748590301	$31.00
		Product Documentation Kit		PKG2863	$16.50
		Lubriplate Aero Grease Tubes		6475400001	$14.50
		Lever Return Spring (Fits inside and outside driver) (10 Pack)		5448200010	$22.00
		Actuator Button Spring (10 Pack)		5451400010	$15.50
		Tamper Proof Screw Kit (4 ea. of 3 sizes) (Includes Wrench)	Satin Chrome	6468326D01	$24.00
		Tamper Proof Screw Kit (4 ea. of 3 sizes) (Includes Wrench)	Bright Brass	646830301	$24.00

Note:

- For kit items that show additional reference #s in parentheses, the quantity required for one lock is included in kit.
- Serial # should be properly identified to assure the correct parts are ordered based on the time of manufacture of your lock.
- When ordering a replacement housing for locks produced prior to April 2005, you must order a new lever and lever sleeve accessory kit.
- Lubriplate Aero grease is the “only" lubricant that should be used.

Parts availability may be limited on older component parts no longer used in production units.

Simplex 5010
Exit Trim

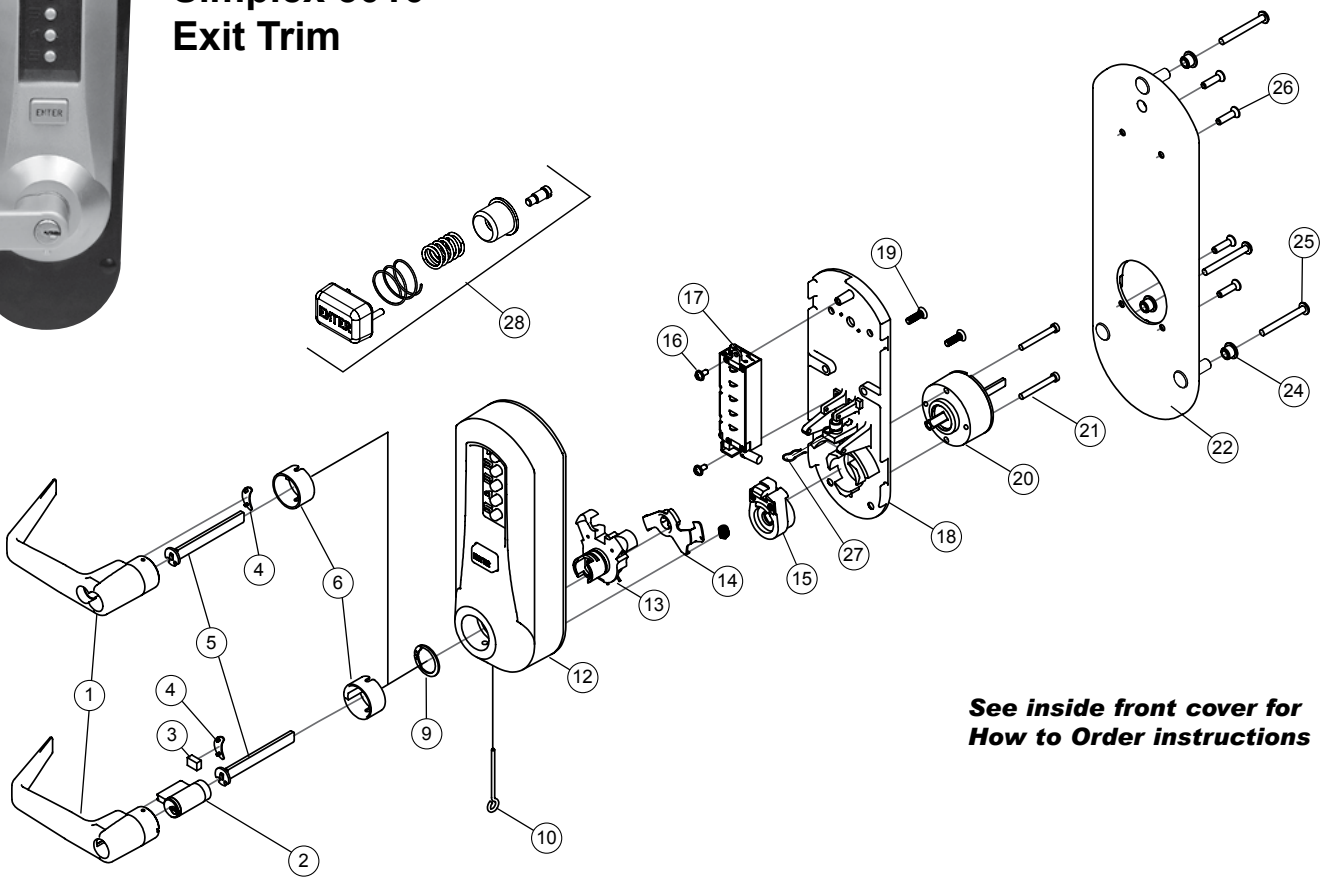

See inside front cover for How to Order instructions

Item	Qty/Lock	Description	Finish	Part Number	List Price
1	1	Outside Lever, KIL (Includes 1 ea. #1, #3, #4, #6)	Satin Chrome	3422926D01	$82.50
		Outside Lever, KIL (Includes 1 ea. #1, #3, #4, #6)	Bright Brass	342290301	$82.50
		Outside Lever, KIL (Includes 1 ea. #1, #3, #4, #6)	Satin Brass	342290401	$82.50
		Outside Lever, KIL (Includes 1 ea. #1, #3, #4, #6)	Dark Bronze	3422974401	$82.50
		Outside Lever, KIL (Includes 1 ea. #1, #3, #4, #6)	Bright Chrome	3422926D01	$82.50
		Outside Lever, Schlage (Includes 1 ea. #1, #4, #6)	Satin Chrome	3423026D01	$110.00
		Outside Lever, Schlage (Includes 1 ea. #1, #4, #6)	Bright Brass	342300301	$110.00
		Outside Lever, Schlage (Includes 1 ea. #1, #4, #6)	Satin Brass	342300401	$110.00
		Outside Lever, Schlage (Includes 1 ea. #1, #4, #6)	Dark Bronze	3423074401	$110.00
		Outside Lever, Schlage (Includes 1 ea. #1, #4, #6)	Bright Chrome	3423002601	$110.00
		Outside Lever, Corbin-Russwin (Includes 1 ea. #1, #4, #6)	Satin Chrome	3423126D01	$110.00
		Outside Lever, Corbin-Russwin (Includes 1 ea. #1, #4, #6)	Bright Brass	342310301	$110.00
		Outside Lever, Corbin-Russwin (Includes 1 ea. #1, #4, #6)	Satin Brass	342310401	$110.00
		Outside Lever, Corbin-Russwin (Includes 1 ea. #1, #4, #6)	Dark Bronze	3423174401	$110.00
		Outside Lever, Corbin-Russwin (Includes 1 ea. #1, #4, #6)	Bright Chrome	3423102601	$110.00
		Outside Lever, Sargent (Includes 1 ea. #1, #4, #6)	Satin Chrome	3423226D01	$110.00
		Outside Lever, Sargent (Includes 1 ea. #1, #4, #6)	Bright Brass	342320301	$110.00
		Outside Lever, Sargent (Includes 1 ea. #1, #4, #6)	Satin Brass	342320401	$110.00
		Outside Lever, Sargent (Includes 1 ea. #1, #4, #6)	Dark Bronze	3423274401	$110.00
		Outside Lever, Sargent (Includes 1 ea. #1, #4, #6)	Bright Chrome	3423202601	$110.00
		Outside Lever, Best (Includes 1 ea. #1, #4, #6)	Satin Chrome	3423326D01	$110.00
		Outside Lever, Best (Includes 1 ea. #1, #4, #6)	Bright Brass	342330301	$110.00

Simplex 5010 Exit Trim *(continued)*

Item	Qty/Lock	Description	Finish	Part Number	List Price
1	1	Outside Lever, KIL (Includes 1 ea. #1, #3, #4, #6)	Satin Chrome	3422926D01	$82.50
		Outside Lever, KIL (Includes 1 ea. #1, #3, #4, #6)	Bright Brass	342290301	$82.50
		Outside Lever, KIL (Includes 1 ea. #1, #3, #4, #6)	Satin Brass	342290401	$82.50
		Outside Lever, KIL (Includes 1 ea. #1, #3, #4, #6)	Dark Bronze	3422974401	$82.50
		Outside Lever, KIL (Includes 1 ea. #1, #3, #4, #6)	Bright Chrome	3422926D01	$82.50
		Outside Lever, Schlage (Includes 1 ea. #1, #4, #6)	Satin Chrome	3423026D01	$110.00
		Outside Lever, Schlage (Includes 1 ea. #1, #4, #6)	Bright Brass	342300301	$110.00
		Outside Lever, Schlage (Includes 1 ea. #1, #4, #6)	Satin Brass	342300401	$110.00
		Outside Lever, Schlage (Includes 1 ea. #1, #4, #6)	Dark Bronze	3423074401	$110.00
		Outside Lever, Schlage (Includes 1 ea. #1, #4, #6)	Bright Chrome	3423002601	$110.00
		Outside Lever, Corbin-Russwin (Includes 1 ea. #1, #4, #6)	Satin Chrome	3423126D01	$110.00
		Outside Lever, Corbin-Russwin (Includes 1 ea. #1, #4, #6)	Bright Brass	342310301	$110.00
		Outside Lever, Corbin-Russwin (Includes 1 ea. #1, #4, #6)	Satin Brass	342310401	$110.00
		Outside Lever, Corbin-Russwin (Includes 1 ea. #1, #4, #6)	Dark Bronze	3423174401	$110.00
		Outside Lever, Corbin-Russwin (Includes 1 ea. #1, #4, #6)	Bright Chrome	3423102601	$110.00
		Outside Lever, Sargent (Includes 1 ea. #1, #4, #6)	Satin Chrome	3423226D01	$110.00
		Outside Lever, Sargent (Includes 1 ea. #1, #4, #6)	Bright Brass	342320301	$110.00
		Outside Lever, Sargent (Includes 1 ea. #1, #4, #6)	Satin Brass	342320401	$110.00
		Outside Lever, Sargent (Includes 1 ea. #1, #4, #6)	Dark Bronze	3423274401	$110.00
		Outside Lever, Sargent (Includes 1 ea. #1, #4, #6)	Bright Chrome	3423202601	$110.00
		Outside Lever, Best (Includes 1 ea. #1, #4, #6)	Satin Chrome	3423326D01	$110.00
		Outside Lever, Best (Includes 1 ea. #1, #4, #6)	Bright Brass	342330301	$110.00
		Outside Lever, Best (Includes 1 ea. #1, #4, #6)	Satin Brass	342330401	$110.00
		Outside Lever, Best (Includes 1 ea. #1, #4, #6)	Dark Bronze	3423374401	$110.00
		Outside Lever, Best (Includes 1 ea. #1, #4, #6)	Bright Chrome	3423302601	$110.00
		Outside Lever, Assa/Medeco/Yale (Includes 1 ea. #1, #4, #6)	Satin Chrome	3423426D01	$110.00
		Outside Lever, Assa/Medeco/Yale (Includes 1 ea. #1, #4, #6)	Bright Brass	342340301	$110.00
		Outside Lever, Assa/Medeco/Yale (Includes 1 ea. #1, #4, #6)	Satin Brass	342340401	$110.00
		Outside Lever, Assa/Medeco/Yale (Includes 1 ea. #1, #4, #6)	Dark Bronze	3423474401	$110.00
		Outside Lever, Assa/Medeco/Yale (Includes 1 ea. #1, #4, #6)	Bright Chrome	3423402601	$110.00
2	1	Kaba KIL Cylinder (w/keys), Keyed Differently	Satin Chrome	5456226D01	$42.00
		Kaba KIL Cylinder (w/keys), Keyed Differently	Satin Brass	545620401	$42.00
		Schlage KIL Cylinder (w/keys), Keyed Differently	Satin Chrome	5456826D01	$42.00
		Schlage KIL Cylinder (w/keys), Keyed Differently	Satin Brass	545680401	$42.00
		KABA90 Key Blank, 50/Box		KABA90	$128.00
3	1	Cylinder Keeper - Lever Sleeve Accessory Kit, KIL (Includes 1 ea. #3, #4, #6)		6470600001	$15.50
4	1	Outside Lever Insert (10 Pack)		5452700010	$11.00
5	1	Tailpiece Kit, KIL (Includes 5 tailpieces - fits various cylinders) ET/Mortise (K1 to K5 - short)		6474500001	$17.50
		Tailpiece Kit, Best (6 and 7-pin) ET/Mortise (C-6 and C-7 short)		6474300001	$13.00
		Tailpiece Kit, Corbin-Russwin/Sargent ET/Mortise (C-3 short)		2452000001	$13.00
		Tailpiece Kit, Assa/Medeco/Yale ET/Mortise Yale (5/6/7-pin) (C-2 short)		7483600001	$13.00
		Tailpiece Kit, Schlage ET/Mortise (C-1 short)		2452700001	$13.00
6	1	Lever Sleeve - Lever Sleeve Accessory Kit, KIL (Includes 1 ea. #3, #4, #6)		6470600001	$15.50
		Lever Sleeve - Lever Sleeve Accessory Kit, IC (Includes 1 ea. #4, #6)		6470700001	$15.50
9	1	External Retaining Ring (10 Pack)		5451700010	$11.00
10	1	Lever Release Tool - Accessory Tool Kit (Includes 1 ea. #11, other tools)		6471700001	$11.00
12	1	Outside Housing, Exterior Code Change (Includes code buttons and enter button)	Satin Chrome	7497626D01	$154.00
		Outside Housing, Exterior Code Change (Includes code buttons and enter button)	Bright Brass	749760301	$154.00

Simplex 5010 Exit Trim *(continued)*

Item	Qty/Lock	Description	Finish	Part Number	List Price
12	1	Outside Housing, Exterior Code Change (Includes code buttons and enter button)	Satin Brass	749760401	$154.00
		Outside Housing, Exterior Code Change (Includes code buttons and enter button)	Dark Bronze	7497674401	$154.00
		Outside Housing, Exterior Code Change (Includes code buttons and enter button)	Wrinkle Black	7497608301	$154.00
		Outside Housing, Exterior Code Change (Includes code buttons and enter button)	Bright Chrome	7497602601	$154.00
13	1	Outside Driver Assembly (Includes 1 ea. #9, #13)		7520100001	$39.50
14	1	Key Override Detector Kit (Includes detector, spring and washer)		3430800001	$13.00
15	1	Extension Sleeve Assembly - ET		7511600001	$31.00
16	2	Screw, #6-32 x 5/16", Pan hd, SEM - Screw Pack (10 ea. 6-32 x 3/8", 5/16", 7/16")		6477600001	$11.00
17	1	Combination Chamber		7483200001	$90.00
18	1	Outside Base Assembly without Chamber (Fist standard and passage models)		7520700001	$77.00
19	2	Screw, #10-24 x .625" Phillips, Outside Base (10 Pack)		5446100010	$11.00
20	1	Exit Trim Drive Unit		7496800001	$53.00
21	2	Connecting Screw 8-32 X 1 3/8" (Incl. 4 ea. #21 - 2 ea. 2 lengths, and 1/4" spacers)		6471200001	$11.00
		Connecting Screw 8-32 X 1 5/8" (Incl. 4 ea. #21 - 2 ea. 2 lengths, and 1/4" spacers)		6471200001	$11.00
22	1	Universal Mounting Plate (Includes Fixed Sex Nuts)	Wrinkle Black	7524608301	$50.50
24	3	Mounting Bushing (10 Pack)	Black	4422906810	$11.00
25	3	Mounting Screw - Installation Hardware Kit (Includes 2 ea. #21; 3 ea. #24, #25; 4 ea. #26)	Satin Chrome	6472526D01	$33.00
		Mounting Screw - Installation Hardware Kit (Includes 2 ea. #21; 3 ea. #24, #25; 4 ea. #26)	Bright Brass	647250301	$33.00
26	4	Screw, 10-24 X .75" (10 Pack) Mounting Plate Screw		5459700010	$11.00
27	1	Actuator Button Spring (10 Pack)		5451400010	$15.50
28	1	Enter Button Assembly Kit (2 kits per box; includes 2 enter buttons, 2 lever buttons, 3 screws, instructions, 2 outside springs, 2 inside springs, 1 installation gauge, 1 screwdriver)	Satin Chrome	6485826D01	$78.00
		Enter Button Assembly Kit (2 kits per box; includes 2 enter buttons, 2 lever buttons, 3 screws, instructions, 2 outside springs, 2 inside springs, 1 installation gauge, 1 screwdriver)	Bright Brass	648580301	$78.00
		Enter Button Assembly Kit (2 kits per box; includes 2 enter buttons, 2 lever buttons, 3 screws, instructions, 2 outside springs, 2 inside springs, 1 installation gauge, 1 screwdriver)	Satin Brass	648580401	$78.00

Additional Kits and Accessories

		Installation Hardware Kit (Includes 2 ea. #21; 3 ea. #24, #25; 4 ea. #26)	Satin Chrome	6472526D01	$33.00
		Installation Hardware Kit (Includes 2 ea. #21; 3 ea. #24, #25; 4 ea. #26)	Bright Brass	647250301	$33.00
		Lubriplate Aero Grease Tubes		6475400001	$14.50
		Lever Return Spring (Fits inside and outside driver) (10 Pack)		5448200010	$22.00
		Product Documentation Kit		PKG3052	$16.50

Note:
• For kit items that show additional reference #s in parentheses, the quantity required for one lock is included in kit.

• Enter button kits (#86) retro fits all production models.

• Lubriplate Aero grease is the “only" lubricant that should be used.

Parts availability may be limited on older component parts no longer used in production units.

Simplex 1000 Series

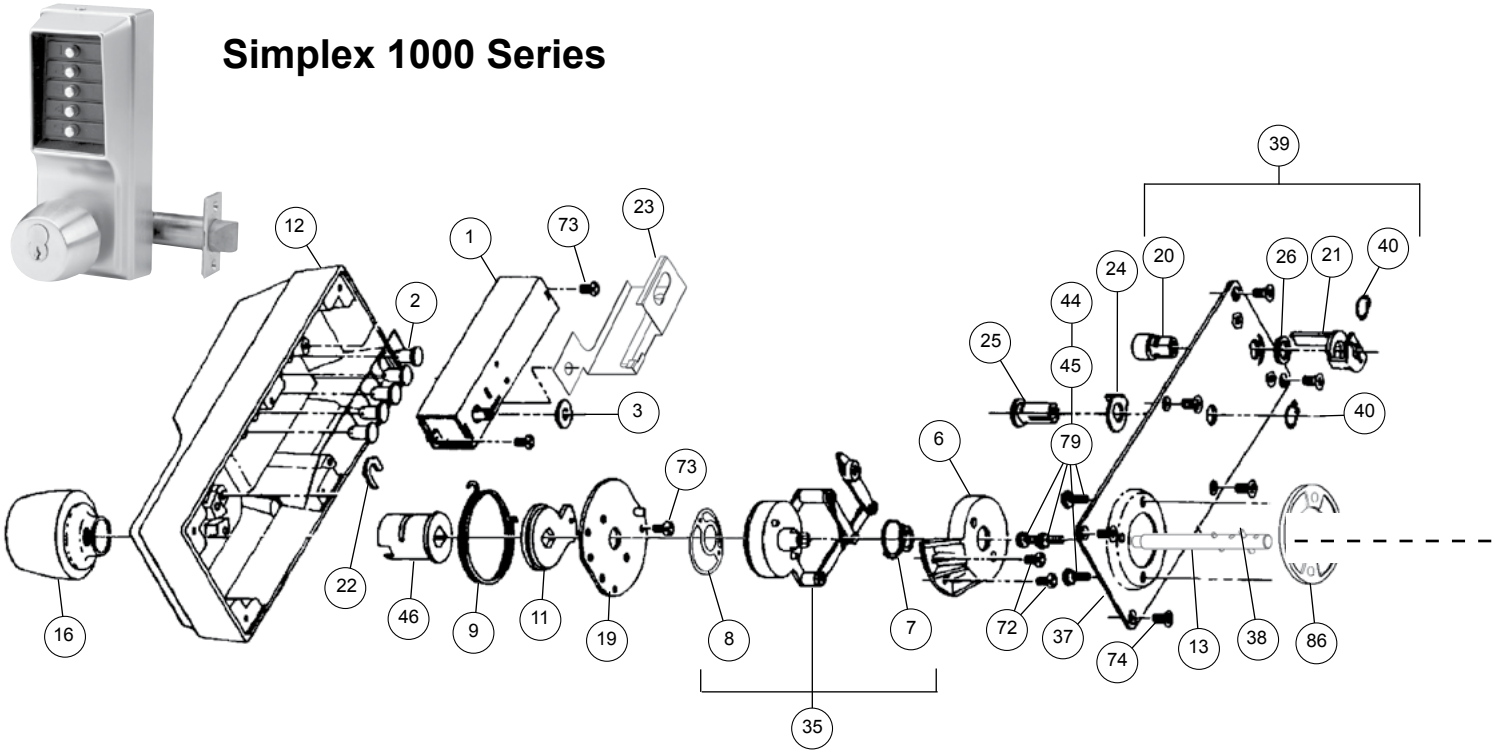

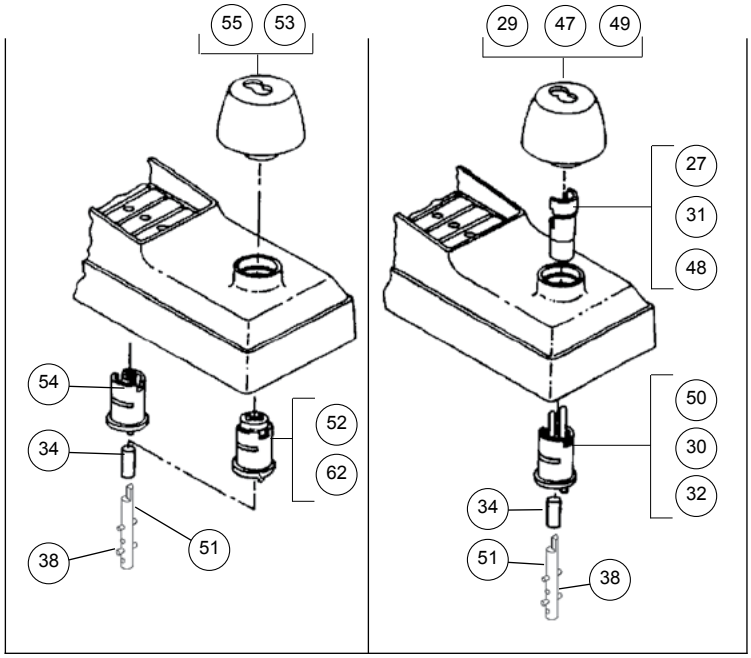

Notes: Older model locks used knob insert (27, 31, 48) to the right. Current production is more represented by model on left.

Key Override Models:
Medeco/ASSA/Yale
Schlage

Key Override Models:
Best & Equivalents
Corbin/Russwin
Sargent

Simplex 1000 Series *(continued)*

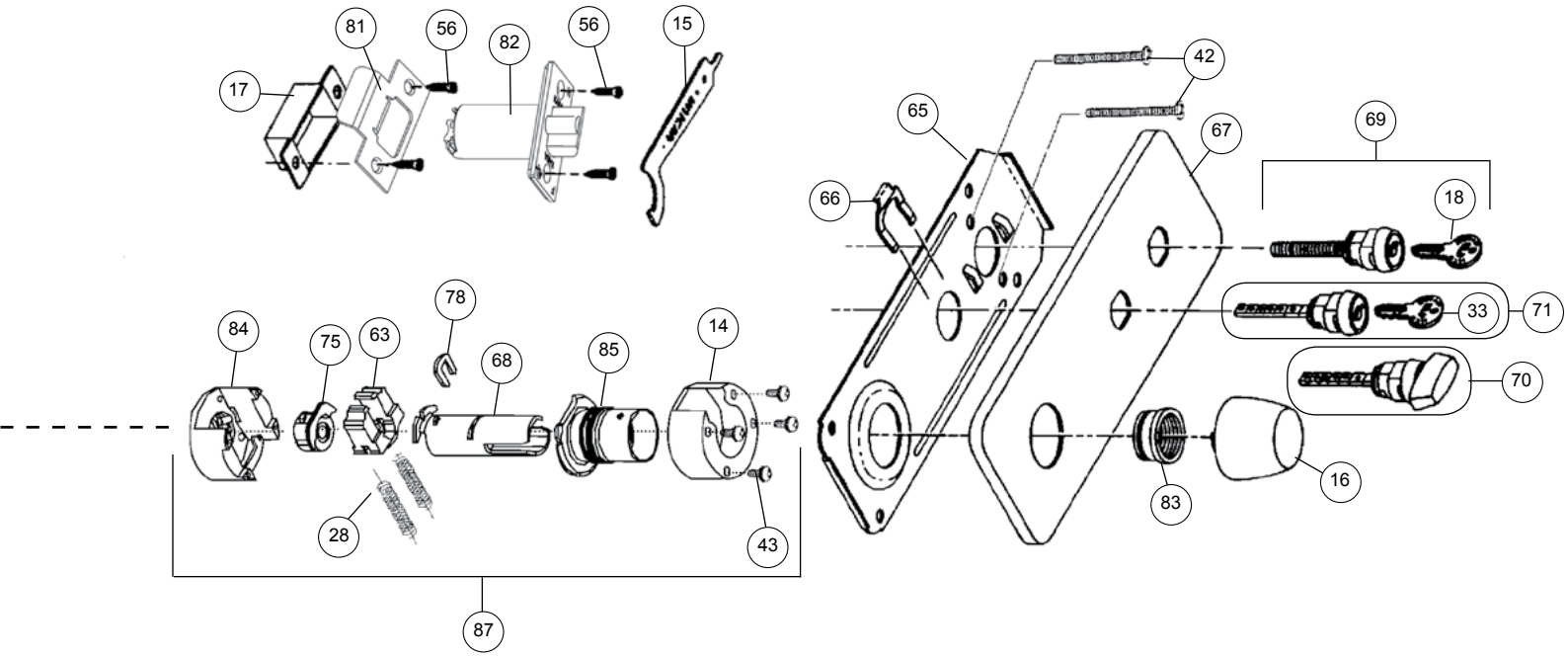

See inside front cover for How to Order instructions

1000 Series Service Kit

P/N 20303500001 $125.00 each

Clutch Assembly

K/O Drive Shaft

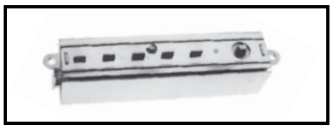

Combination Chamber

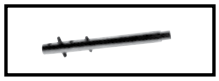

Standard Drive Shaft

Knob Return Spring

Chamber Shaft Bushing

Stop Plate

Simplex 1000 Series *(continued)*

Item	Qty/Lock	Description	Finish	Part Number	List Price
1	1	Combination Chamber M-56 / M-63 (Old # 201429-000-01)		7436600001	$90.00
2	5	Pushbuttons (10 Pack)	Black	20002410610	$12.00
		Pushbuttons (10 Pack)	Silver	20002410910	$12.00
3	1	Shaft Bushing (5 Pack)		20002600005	$11.00
6	1	Clutch Cover Assembly		20100900001	$12.00
7	1	Balance Spring - Clutch Spring Kit (Includes 1 ea. #7, #8)		20101600001	$11.00
8	1	Double Wave Spring - Clutch Spring Kit (Includes 1 ea. #7, #8) (Replaced 201018-000-01)		20101600001	$11.00
9	1	Knob Return Spring - Knob Return Spring Kit (Includes 1 ea. #9, #11)		20104000001	$11.00
11	1	Stop Plate Assembly - Knob Return Spring Kit (Includes 1 ea. #9, #11)		20104000001	$11.00
12	1	Front Housing	Satin Chrome	20104926D01	$82.50
		Front Housing	Bright Chrome	20104902601	$82.50
		Front Housing	Bright Brass	2010490301	$82.50
		Front Housing	Antique Brass	2010490501	$82.50
13	1	Drive Shaft Shaft Assembly for Non Key Override		20105000001	$14.50
14	1	Shoe Housing Cover		20127700001	$11.00
15	1	Installation Wrench (spanner wrench) - Code Change Tool Kit (Includes 1 ea. #15, #18)		20127800001	$10.00
16	1	Knob Assembly - No Key Override (Includes spacer) (Old number 201284)	Satin Chrome	3426426D01	$60.50
		Knob Assembly - No Key Override (Includes spacer) (Old number 201284)	Bright Chrome	3426402601	$60.50
		Knob Assembly - No Key Override (Includes spacer) (Old number 201284)	Bright Brass	342640301	$60.50
		Knob Assembly - No Key Override (Includes spacer) (Old number 201284)	Antique Brass	342640501	$60.50
17	1	Strike Box (Old Number 55068-000-01)		20128700001	$9.00
18	1	DF-59 Key - Code Change Tool Kit (Includes 1 ea. #15, #18)		20127800001	$10.00
19	1	Clutch Backing Plate		20130400001	$9.00
20	1	Combination Change Stud - Combination Change Actuator Kit (Includes 1 ea. #20, #21, #26, #40)		20133600001	$12.00
21	1	Combination Change Sleeve - Combination Change Actuator Kit (Includes 1 ea. #20, #21, #26, #40)		20133600001	$12.00
22	1	Retainer Clip (For Front Knob) (5 Pack)		20134300005	$11.00
23	1	Chamber Release - Passage Kit (For models with passage set) (Includes 1 ea. #23, #24, #25, #40)		20182500001	$22.00
24	1	Chamber Release Cam - Passage Kit (For models with passage set) (Includes 1 ea. #23, #24, #25, #40)		20182500001	$22.00
25	1	Actuator Stud - Passage Kit (For models with passage set) (Includes 1 ea. #23, #24, #25, #40)		20182500001	$22.00
26	1	Combination Change Sleeve Washer - Combination Change Actuator Kit (Includes 1 ea. #20, #21, #26, #40)		20133600001	$12.00
27	1	Knob Insert (Also fits Falcon / Arrow / Eagle / KSP / Lloyd Matheson) (used with 201382 ONLY) (see #29)		20136500001	N/A
28	2	Shoe Spring (For Cylindrical Drive Unit) (10 Pack)		20136600010	$10.00
29	1	Best Knob Key Override Assembly - (Also fits Falcon / Arrow / Eagle / KSP / Lloyd Matheson) Removable core not included (Old number 201382-000-01) (Knob Insert not Required)	Satin Chrome	3426326D01	$82.50
29	1	Best Knob Key Override Assembly - (Also fits Falcon / Arrow / Eagle / KSP / Lloyd Matheson) Removable core not included (Old number 201382-000-01) (Knob Insert not Required)	Bright Chrome	3426302601	$82.50
		Best Knob Key Override Assembly - (Also fits Falcon / Arrow / Eagle / KSP / Lloyd Matheson) Removable core not included (Old number 201382-000-01) (Knob Insert not Required)	Bright Brass	342630301	$82.50
		Best Knob Key Override Assembly - (Also fits Falcon / Arrow / Eagle / KSP / Lloyd Matheson) Removable core not included (Old number 201382-000-01) (Knob Insert not Required)	Antique Brass	342630501	$82.50
30	1	Best Drive Sleeve Assembly (Also fits Falcon / Arrow / Eagle / KSP / Lloyd Matheson) (Includes 1 ea. #22, #30)		20139100001	$35.00
31	1	Corbin / Russwin Knob Insert (used with 201523 ONLY) (see #47)		20141400001	N/A
32	1	Corbin / Russwin Drive Sleeve Assembly (Includes 1 ea. #22, #30)		20142100001	$35.00
33	1	Key DF-5 (For Models with passage set) (2 Pack)		20142200002	$7.50
34	1	Shaft Self-aligning Bushing (For Models 1021 & 1041)		20142500001	$10.00
35	1	Clutch Sub-Assembly (Includes 1 ea. #7, #8, #35)		20143000001	$37.50
37	1	Back Plate Sub-assembly (Includes 1 ea. #20, #21, #26, #37, #40) (see #39)			N/A

Simplex 1000 Series *(continued)*

Item	Qty/Lock	Description	Finish	Part Number	List Price
38	1	Roll Pin (Upper Pin) 0.100" (2.5 mm) dia. (Includes 1 ea. #38, #57; 2 ea. #42, #86; 4 ea. #44, #45, #56, #79)	Satin Chrome	20421026D01	$11.00
		Roll Pin (Upper Pin) 0.100" (2.5 mm) dia. (Includes 1 ea. #38, #57; 2 ea. #42, #86; 4 ea. #44, #45, #56, #79)	Bright Chrome	2042100301	$11.00
		Roll Pin (Upper Pin) 0.100" (2.5 mm) dia. (Includes 1 ea. #38, #57; 2 ea. #42, #86; 4 ea. #44, #45, #56, #79)	Antique Brass	2042100501	$11.00
39	1	Back Plate Sub-assembly (Includes 1 ea. #20, #21, #26, #37, #40)		20143900001	$23.00
40	1	Retainer Ring 3/8" (9 mm) (For passage set and combination change sleeve) (10 Pack)		20144000010	$11.00
42	2	Screw 8-32 x 2 1/2" (64 mm) (For mounting lock to door) (Includes 1 ea. #38, #57; 2 ea. #42, #86; 4 ea. #44, #45, #56, #79)	Satin Chrome	20421026D01	$11.00
		Screw 8-32 x 2 1/2" (64 mm) (For mounting lock to door) (Includes 1 ea. #38, #57; 2 ea. #42, #86; 4 ea. #44, #45, #56, #79)	Bright Brass	2042100301	$11.00
		Screw 8-32 x 2 1/2" (64 mm) (For mounting lock to door) (Includes 1 ea. #38, #57; 2 ea. #42, #86; 4 ea. #44, #45, #56, #79)	Antique Brass	2042100501	$11.00
43	4	Sems Screw Phillips 6-32 x 1/4" (6 mm) R.H.M.S. (For shoe housing cover)		20144600010	$7.50
44	4	Sems Screw Phillips 8-32 x 7/16" (11 mm) R.H.M.S. (For spacer) (Includes 1 ea. #38, #57; 2 ea. #42, #86; 4 ea. #44, #45, #56, #79)	Satin Chrome	20421026D01	$11.00
		Sems Screw Phillips 8-32 x 7/16" (11 mm) R.H.M.S. (For spacer) (Includes 1 ea. #38, #57; 2 ea. #42, #86; 4 ea. #44, #45, #56, #79)	Bright Brass	2042100301	$11.00
		Sems Screw Phillips 8-32 x 7/16" (11 mm) R.H.M.S. (For spacer) (Includes 1 ea. #38, #57; 2 ea. #42, #86; 4 ea. #44, #45, #56, #79)	Antique Brass	2042100501	$11.00
45	4	Sems Screw, Phillips 8-32 x 11/16" (17 mm) R.H.M.S. (For spacer) (Includes 1 ea. #38, #57; 2 ea. #42, #86; 4 ea. #44, #45, #56, #79)	Satin Chrome	20421026D01	$11.00
		Sems Screw, Phillips 8-32 x 11/16" (17 mm) R.H.M.S. (For spacer) (Includes 1 ea. #38, #57; 2 ea. #42, #86; 4 ea. #44, #45, #56, #79)	Bright Brass	2042100301	$11.00
		Sems Screw, Phillips 8-32 x 11/16" (17 mm) R.H.M.S. (For spacer) (Includes 1 ea. #38, #57; 2 ea. #42, #86; 4 ea. #44, #45, #56, #79)	Antique Brass	2042100501	$11.00
46	1	Drive Sleeve Assembly - No Key Override (Old # 201062-045-01) (Includes 1 ea. #22, #46)		20149900001	$24.00
47	1	Corbin / Russwin Knob Key Override Assembly-Removable core not included (Old #201523) (Includes Spacer) (Knob Insert not Required)	Satin Chrome	3426526D01	$82.50
		Corbin / Russwin Knob Key Override Assembly-Removable core not included (Old #201523) (Includes Spacer) (Knob Insert not Required)	Bright Chrome	3426502601	$82.50
		Corbin / Russwin Knob Key Override Assembly-Removable core not included (Old #201523) (Includes Spacer) (Knob Insert not Required)	Bright Brass	342650301	$82.50
		Corbin / Russwin Knob Key Override Assembly-Removable core not included (Old #201523) (Includes Spacer) (Knob Insert not Required)	Antique Brass	342650501	$82.50
48	1	Sargent Knob Insert (used with 201526 ONLY) (see #49)		20152400001	N/A
49	1	Sargent Knob Key Override Assembly (Old #201526) Removable core not included (Includes Spacer) (Knob Insert not Required)	Satin Chrome	3426626D01	$82.50
		Sargent Knob Key Override Assembly (Old #201526) Removable core not included (Includes Spacer) (Knob Insert not Required)	Bright Chrome	3426602601	$82.50
		Sargent Knob Key Override Assembly (Old #201526) Removable core not included (Includes Spacer) (Knob Insert not Required)	Bright Brass	342660301	$82.50
		Sargent Knob Key Override Assembly (Old #201526) Removable core not included (Includes Spacer) (Knob Insert not Required)	Antique Brass	342660501	$82.50
50	1	Sargent Drive Sleeve Assembly (Includes 1 ea. #22, #50)		20153000001	$35.00
51	1	Drive Shaft Assembly for Key Override (Old #201267-045-01)		20154700001	$16.50
52	1	Medeco / ASSA / Yale Drive Sleeve Assembly (Use spacer #201569 and #203054 for 5-6pin Medeco / ASSA cylinders) (Includes 1 ea. #22, #52)		20154800001	$54.00
53	1	Medeco / ASSA / Yale Knob Key Override Assembly. Removable core not included. (Use spacer #201569 and #203054 for 5-6 pin Medeco / ASSA cylinders) (old # 201517)	Satin Chrome	3426826D01	$82.50
		Medeco / ASSA / Yale Knob Key Override Assembly. Removable core not included. (Use spacer #201569 and #203054 for 5-6 pin Medeco / ASSA cylinders) (old # 201517)	Bright Chrome	3426802601	$82.50
		Medeco / ASSA / Yale Knob Key Override Assembly. Removable core not included. (Use spacer #201569 and #203054 for 5-6 pin Medeco / ASSA cylinders) (old # 201517)	Bright Brass	342680301	$82.50
		Medeco / ASSA / Yale Knob Key Override Assembly. Removable core not included. (Use spacer #201569 and #203054 for 5-6 pin Medeco / ASSA cylinders) (old # 201517)	Antique Brass	342680501	$82.50

Simplex 1000 Series *(continued)*

Item	Qty/Lock	Description	Finish	Part Number	List Price
54	1	Schlage Drive Sleeve Assembly (Old # 201559-045-01) (Includes 1 ea. #22, #54)		20155500001	$54.00
55	1	Schlage Knob Key Override Assembly. Removable core not included	Satin Chrome	3426726D01	$82.50
		Schlage Knob Key Override Assembly. Removable core not included	Bright Chrome	3426702601	$82.50
		Schlage Knob Key Override Assembly. Removable core not included	Bright Brass	342670301	$82.50
		Schlage Knob Key Override Assembly. Removable core not included	Antique Brass	342670501	$82.50
56	4	Combination Screw; Phillips 8-32 x 3/4" (19 mm) (For Latch & Strike Plate) (10 Pack)	Satin Chrome	20156526D10	$11.00
		Combination Screw; Phillips 8-32 x 3/4" (19 mm) (For Latch & Strike Plate) (10 Pack)	Bright Brass	2015650310	$11.00
		Combination Screw; Phillips 8-32 x 3/4" (19 mm) (For Latch & Strike Plate) (10 Pack)	Antique Brass	2015650510	$11.00
57	1	Rubber Bumper (For Door Frame) (Self adhesive strip of 4) (5 Pack)		20156800005	$11.00
58	1	Medeco Knob Spacer (For 5 and 6-pin Medeco / ASSA)		20156900001	$16.50
62	1	ASSA Drive Sleeve Assembly (Includes 1 ea. #22, #62) (see #52)		20160900001	N/A
63	1	Shoe (Old # 201272-000-01)		20172300001	$11.00
64	1	Unified Trim Plate - Standard (Not shown in exploded view)	Satin Chrome	20173626D01	$35.00
		Unified Trim Plate - Standard (Not shown in exploded view)	Bright Chrome	20173602601	$35.00
		Unified Trim Plate - Standard (Not shown in exploded view)	Bright Brass	2017360301	$35.00
		Unified Trim Plate - Standard (Not shown in exploded view)	Antique Brass	2017360501	$35.00
65	1	Reinforcing Plate		20173800001	$12.00
66	1	Passage Spring Clip (10 Pack)		20174000010	$11.00
67	1	Unified Trim Plate (For Passage set Models)	Satin Chrome	20174526D01	$35.00
		Unified Trim Plate (For Passage set Models)	Bright Chrome	20174502601	$35.00
		Unified Trim Plate (For Passage set Models)	Bright Brass	2017450301	$35.00
		Unified Trim Plate (For Passage set Models)	Antique Brass	2017450501	$35.00
68	1	Inside Drive Sleeve Assembly (Includes 1 ea. #68, #78) (Old #20127504501)		20178200001	$16.50
69	1	Combination Change Plug Assembly with (2) DF59 keys	Satin Chrome	20178726D01	$18.50
		Combination Change Plug Assembly with (2) DF59 keys	Bright Brass	2017870301	$18.50
		Combination Change Plug Assembly with (2) DF59 keys	Antique Brass	2017870501	$18.50
70	1	Passage Set Thumb Turn Plug Assembly	Satin Chrome	20180726D01	$18.50
		Passage Set Thumb Turn Plug Assembly	Bright Brass	2018070301	$18.50
		Passage Set Thumb Turn Plug Assembly	Antique Brass	2018070501	$18.50
71	1	Passage Set Key Turn Plug Assembly (with (2) DF5 keys)	Satin Chrome	20181826D01	$18.50
		Passage Set Key Turn Plug Assembly (with (2) DF5 keys)	Bright Brass	2018180301	$18.50
		Passage Set Key Turn Plug Assembly (with (2) DF5 keys)	Antique Brass	2018180501	$18.50
72	2	Sems Screw Phillips 6-32 x 7/16" (11 mm) R.H.M.S. (For clutch cover) (Includes 10 ea. #72, #73, #74)		6477600001	$11.00
73	2	Sems Screw Phillips 6-32 x 5/16" (8 mm) R.H.M.S. (For combination chamber & clutch backing plate) (Includes 10 ea. #72, #73, #74) Screw Pack (10 ea. 6-32 x 3/8", 5/16", 7/16")		6477600001	$11.00
74	6	Screw - Phillips 6-32 x 3/8" (10 mm) F.H.M.S. (For back plate) (Replaces 201444-022-10) (Includes 10 ea. #72, #73, #74) Screw Pack (10 ea. 6-32 x 3/8", 5/16", 7/16")		6477600001	$11.00
75	1	Drive Insert (Old # 201218-000-01)		20401500001	$23.00
78	1	Retainer Clip (For Inside Knob) (5 Pack)		20412000005	$11.00
79	4	Sems Screw Phillips 8-32 x 5/16" (5 mm) R.H.M.S. (For spacer) (Old # 201449) (Includes 1 ea. #38, #57; 2 ea. #42, #86; 4 ea. #44, #45, #56, #79)	Satin Chrome	20421026D01	$11.00
		Sems Screw Phillips 8-32 x 5/16" (5 mm) R.H.M.S. (For spacer) (Old # 201449) (Includes 1 ea. #38, #57; 2 ea. #42, #86; 4 ea. #44, #45, #56, #79)	Bright Brass	2042100301	$11.00
		Sems Screw Phillips 8-32 x 5/16" (5 mm) R.H.M.S. (For spacer) (Old # 201449) (Includes 1 ea. #38, #57; 2 ea. #42, #86; 4 ea. #44, #45, #56, #79)	Antique Brass	2042100501	$11.00
80	1	Spacer (Passage Feature for 1031/1041 Models) (Not shown in exploded view) (10 Pack)		20416000010	$11.00
81	1	Standard “T" Strike Plate (Old # 201288 or 204167)	Satin Chrome	20422726D01	$11.00
		Standard “T" Strike Plate (Old # 201288 or 204167)	Bright Brass	2042270301	$11.00
		Standard “T" Strike Plate (Old # 201288 or 204167)	Antique Brass	2042270501	$11.00
		Standard “T" Strike Plate (Old # 201288 or 204167)	Bright Chrome	20422702601	$11.00

Simplex 1000 Series *(continued)*

Item	Qty/Lock	Description	Finish	Part Number	List Price
81	1	ASA Strike (For 4 7/8" (105 mm) long cutout) (Old # 201413 or 1000-15-26D)	Satin Chrome	20411926D01	$12.00
		ASA Strike (For 4 7/8" (105 mm) long cutout) (Old # 201413 or 1000-15-03)	Bright Brass	2041190301	$12.00
		ASA Strike (For 4 7/8" (105 mm) long cutout) (Old # 201413 or 1000-15-05)	Antique Brass	2041190501	$12.00
82	1	1/2" (13 mm) Floating Front Throw Latch 2 3/4" (70 mm) Backset	Satin Chrome	20416826D01	$38.50
		1/2" (13 mm) Floating Front Throw Latch 2 3/4" (70 mm) Backset	Bright Brass	2041680301	$38.50
		1/2" (13 mm) Floating Front Throw Latch 2 3/4" (70 mm) Backset	Antique Brass	2041680501	$38.50
		3/4" (19mm) Brass Latch - carries 3-hour UL/ULC fire rating for “A" labeled doors. 2 3/4" (70 mm) backset. Beveled front.	Bright Brass	2011440301	$66.00
		3/4" (19mm) Brass Latch - carries 3-hour UL/ULC fire rating for “A" labeled doors. 2 3/4" (70 mm) backset. Beveled front.	Antique Brass	2011440501	$66.00
		3/4" (19mm) Brass Latch - carries 3-hour UL/ULC fire rating for “A" labeled doors. 2 3/4" (70 mm) backset. Beveled front.	Satin Chrome	20114426D01	$66.00
		Latch 1/2" Floating Face, 2 3/8" Backset - 3 Hour Fire Rated (Includes Screws)	Satin Chrome	751852601	$38.50
		Latch 1/2" Floating Face, 2 3/8" Backset - 3 Hour Fire Rated (Includes Screws)	Bright Brass	751850301	$38.50
		Latch 1/2" Floating Face, 2 3/8" Backset - 3 Hour Fire Rated (Includes Screws)	Antique Brass	751850501	$38.50
83	1	Thread Ring (Old #201282)	Satin Chrome	20416926D01	$12.00
		Thread Ring (Old #201282)	Bright Brass	2041690301	$12.00
		Thread Ring (Old #201282)	Antique Brass	2041690501	$12.00
84	1	Shoe Retainer and Bridge Assembly		20419900001	$37.50
85	1	Shoe Retainer Cap Assembly	Satin Chrome	20420026D01	$32.00
		Shoe Retainer Cap Assembly	Bright Chrome	20420002601	$32.00
		Shoe Retainer Cap Assembly	Bright Brass	2042000301	$32.00
		Shoe Retainer Cap Assembly	Antique Brass	2042000501	$32.00
86	1	1/4" Spacer, Door Thickness Kit (Includes 1 ea. #38, #57; 2 ea. #42, #86; 4 ea. #44, #45, #56, #79)	Satin Chrome	20421026D01	$11.00
		1/4" Spacer, Door Thickness Kit (Includes 1 ea. #38, #57; 2 ea. #42, #86; 4 ea. #44, #45, #56, #79)	Bright Brass	2042100301	$11.00
		1/4" Spacer, Door Thickness Kit (Includes 1 ea. #38, #57; 2 ea. #42, #86; 4 ea. #44, #45, #56, #79)	Antique Brass	2042100501	$11.00
87	1	Cylindrical Drive Unit Assembly (Includes 1 ea. #14, #63, #68, #75, #78, #84, #85; 2 ea. #28; 4 ea. #43)	Satin Chrome	20420226D01	$103.50
		Cylindrical Drive Unit Assembly (Includes 1 ea. #14, #63, #68, #75, #78, #84, #85; 2 ea. #28; 4 ea. #43)	Bright Chrome	20420202601	$103.50
		Cylindrical Drive Unit Assembly (Includes 1 ea. #14, #63, #68, #75, #78, #84, #85; 2 ea. #28; 4 ea. #43)	Bright Brass	2042020301	$103.50
		Cylindrical Drive Unit Assembly (Includes 1 ea. #14, #63, #68, #75, #78, #84, #85; 2 ea. #28; 4 ea. #43)	Antique Brass	2042020501	$103.50
88	1	Back Plate Assembly (Includes 1 ea. #39, #86, #87; 4 ea. #44) (Not shown in exploded view)	Satin Chrome	20420326D01	$121.00
		Back Plate Assembly (Includes 1 ea. #39, #86, #87; 4 ea. #44) (Not shown in exploded view)	Bright Brass	2042030301	$121.00
		Back Plate Assembly (Includes 1 ea. #39, #86, #87; 4 ea. #44) (Not shown in exploded view)	Antique Brass	2042030501	$121.00
89	1	Screw Pack (Includes 1 ea. #38, #57; 2 ea. #42, #86; 4 ea. #44, #45, #56, #79) (Not shown in exploded view)	Satin Chrome	20421026D01	$11.00
		Screw Pack (Includes 1 ea. #38, #57; 2 ea. #42, #86; 4 ea. #44, #45, #56, #79) (Not shown in exploded view)	Bright Brass	2042100301	$11.00
89	1	Screw Pack (Includes 1 ea. #38, #57; 2 ea. #42, #86; 4 ea. #44, #45, #56, #79) (Not shown in exploded view)	Antique Brass	2042100501	$11.00
90	1	Installation Hardware Kit (Includes 1 ea. #15, #17, #69, #81, #83, #89; 2 ea. #86) (Not shown in exploded view)	Satin Chrome	20421126D11	$38.50
		Installation Hardware Kit (Includes 1 ea. #15, #17, #69, #81, #83, #89; 2 ea. #86) (Not shown in exploded view)	Bright Brass	2042110311	$38.50
		Installation Hardware Kit (Includes 1 ea. #15, #17, #69, #81, #83, #89; 2 ea. #86) (Not shown in exploded view)	Antique Brass	2042110511	$38.50

Simplex 1000 Series *(continued)*

Additional Kits and Accessories

		Rubber Knob Insert Kit for Die Cast Knobs (see equivalent knob and replace)		6479200001	N/A
		Lubriplate Aero Grease Tubes		6475400001	$14.50
		Best Key Override Spacer (not shown)		3800-00-3007	$24.00
		Sargent Key Override Spacer (not shown)		20402900001	$24.00
		Corbin-Russwin Key Override Spacer (not shown)		20402800001	$24.00
		Latch Extension Assembly - Converts to 3 3/4" (95mm) backset		20402200001	$35.00
		Latch Extension Assembly - Converts to 5" (130mm) backset		20402300001	$31.00
		3/4" (19 mm) Flat Front Latch - carries 3-hour UL/ULC fire rating for “A" labeled doors. 2 3/4" (70 mm) backset	Bright Brass	2016050301	$66.00
		3/4" (19 mm) Flat Front Latch - carries 3-hour UL/ULC fire rating for “A" labeled doors. 2 3/4" (70 mm) backset	Antique Brass	2016050501	$66.00
		3/4" (19 mm) Flat Front Latch - carries 3-hour UL/ULC fire rating for “A" labeled doors. 2 3/4" (70 mm) backset	Satin Chrome	20160526D01	$66.00
		ASA Roller Strike (For 4 7/8" (105 mm) long cutout) (old #1000-14-03)	Bright Brass	2018210301	$44.00
		ASA Roller Strike (For 4 7/8" (105 mm) long cutout) (old #1000-14-05)	Antique Brass	2018210501	$44.00
		ASA Roller Strike (For 4 7/8" (105 mm) long cutout) (old #1000-14-26D)	Satin Chrome	20182126D01	$44.00
		3/4" (19 mm) Brass Latch - carries 3-hour UL/ULC fire rating for “A" labeled doors. 2 3/4" (70 mm) backset. Beveled front. (For L1076 privacy Model only)	Bright Brass	2040040301	$66.00
		3/4" (19 mm) Brass Latch - carries 3-hour UL/ULC fire rating for “A" labeled doors. 2 3/4" (70 mm) backset. Beveled front. (For L1076 privacy Model only)	Antique Brass	2040040501	$66.00
		3/4" (19 mm) Brass Latch - carries 3-hour UL/ULC fire rating for “A" labeled doors. 2 3/4" (70 mm) backset. Beveled front. (For L1076 privacy Model only)	Satin Chrome	20400426D01	$66.00
		1/2" (13 mm) Brass Latch - carries 3-hour UL/ULC fire rating for “A" labeled doors. 2 3/4" (70 mm) backset. Fixed beveled front face.	Satin Chrome	5507126D01	$38.50
		1/2" (13 mm) Brass Latch - carries 3-hour UL/ULC fire rating for “A" labeled doors. 2 3/4" (70 mm) backset. Fixed beveled front face.	Bright Brass	550710301	$38.50
		1/2" (13 mm) Brass Latch - carries 3-hour UL/ULC fire rating for “A" labeled doors. 2 3/4" (70 mm) backset. Fixed beveled front face.	Antique Brass	550710501	$38.50

Removable core cylinders are not included. Best equivalent core is available – see above.

Note:
Lubriplate Aero grease is the “only" lubricant that should be used.

All diecast knobs have covers on backside.

Simplex 1000 Series *(continued)*

Knob Conversion Assemblies

		Corbin / Russwin Conversion Assembly (C) (Includes 1 ea. #22, #32, #34, #47, #51)	Satin Chrome	20141726D01	$144.00
		Corbin / Russwin Conversion Assembly (C) (Includes 1 ea. #22, #32, #34, #47, #51)	Bright Chrome	20141702601	$144.00
		Corbin / Russwin Conversion Assembly (C) (Includes 1 ea. #22, #32, #34, #47, #51)	Bright Brass	2014170301	$144.00
		Corbin / Russwin Conversion Assembly (C) (Includes 1 ea. #22, #32, #34, #47, #51)	Antique Brass	2014170501	$144.00
		Best / Falcon / Arrow / Eagle / KSP / Lloyd Matheson Conversion Assembly (B) (Includes 1 ea. #22, #29, #30, #34, #51)	Satin Chrome	20149026D01	$144.00
		Best / Falcon / Arrow / Eagle / KSP / Lloyd Matheson Conversion Assembly (B) (Includes 1 ea. #22, #29, #30, #34, #51)	Bright Chrome	20149002601	$144.00
		Best / Falcon / Arrow / Eagle / KSP / Lloyd Matheson Conversion Assembly (B) (Includes 1 ea. #22, #29, #30, #34, #51)	Bright Brass	2014900301	$144.00
		Best / Falcon / Arrow / Eagle / KSP / Lloyd Matheson Conversion Assembly (B) (Includes 1 ea. #22, #29, #30, #34, #51)	Antique Brass	2014900501	$144.00
		ASSA / Medeco / Yale Conversion Assembly-Request Spacer 201569 for 5-pin Medeco. (M) (Includes 1 ea. #22, #34, #51, #52, #53)	Satin Chrome	20151926D01	$144.00
		ASSA / Medeco / Yale Conversion Assembly-Request Spacer 201569 for 5-pin Medeco. (M) (Includes 1 ea. #22, #34, #51, #52, #53)	Bright Chrome	20151902601	$144.00
		ASSA / Medeco / Yale Conversion Assembly-Request Spacer 201569 for 5-pin Medeco. (M) (Includes 1 ea. #22, #34, #51, #52, #53)	Bright Brass	2015190301	$144.00
		ASSA / Medeco / Yale Conversion Assembly-Request Spacer 201569 for 5-pin Medeco. (M) (Includes 1 ea. #22, #34, #51, #52, #53)	Antique Brass	2015190501	$144.00
		Sargent Conversion Assembly (R) (Includes 1 ea. #22, #34, #49, #50, #51)	Satin Chrome	20153226D01	$144.00
		Sargent Conversion Assembly (R) (Includes 1 ea. #22, #34, #49, #50, #51)	Bright Chrome	20153202601	$144.00
		Sargent Conversion Assembly (R) (Includes 1 ea. #22, #34, #49, #50, #51)	Bright Brass	2015320301	$144.00
		Sargent Conversion Assembly (R) (Includes 1 ea. #22, #34, #49, #50, #51)	Antique Brass	2015320501	$144.00
		Schlage Conversion Assembly (S) (Includes 1 ea. #22, #34 #51, #54, #55)	Satin Chrome	20155826D01	$144.00
		Schlage Conversion Assembly (S) (Includes 1 ea. #22, #34 #51, #54, #55)	Bright Chrome	20155802601	$144.00
		Schlage Conversion Assembly (S) (Includes 1 ea. #22, #34 #51, #54, #55)	Bright Brass	2015580301	$144.00
		Schlage Conversion Assembly (S) (Includes 1 ea. #22, #34 #51, #54, #55)	Antique Brass	2015580501	$144.00

Use these conversion assemblies to convert an existing 1000 Series lock from standard to key override, or from one key override to another.

Time Mode Option Parts

		Pneumatic Timer with Microswitch		20021000001	$350.00
		Modified Chamber Link		20157500001	$24.00
		Pneumatic Timer without Microswitch		20157700001	$275.00
		Spacer		20157800001	$5.50
		Modified Cover Plate Assembly		20158000001	$34.00

Parts availability may be limited on older component parts no longer used in production units.

Simplex L1000 Series

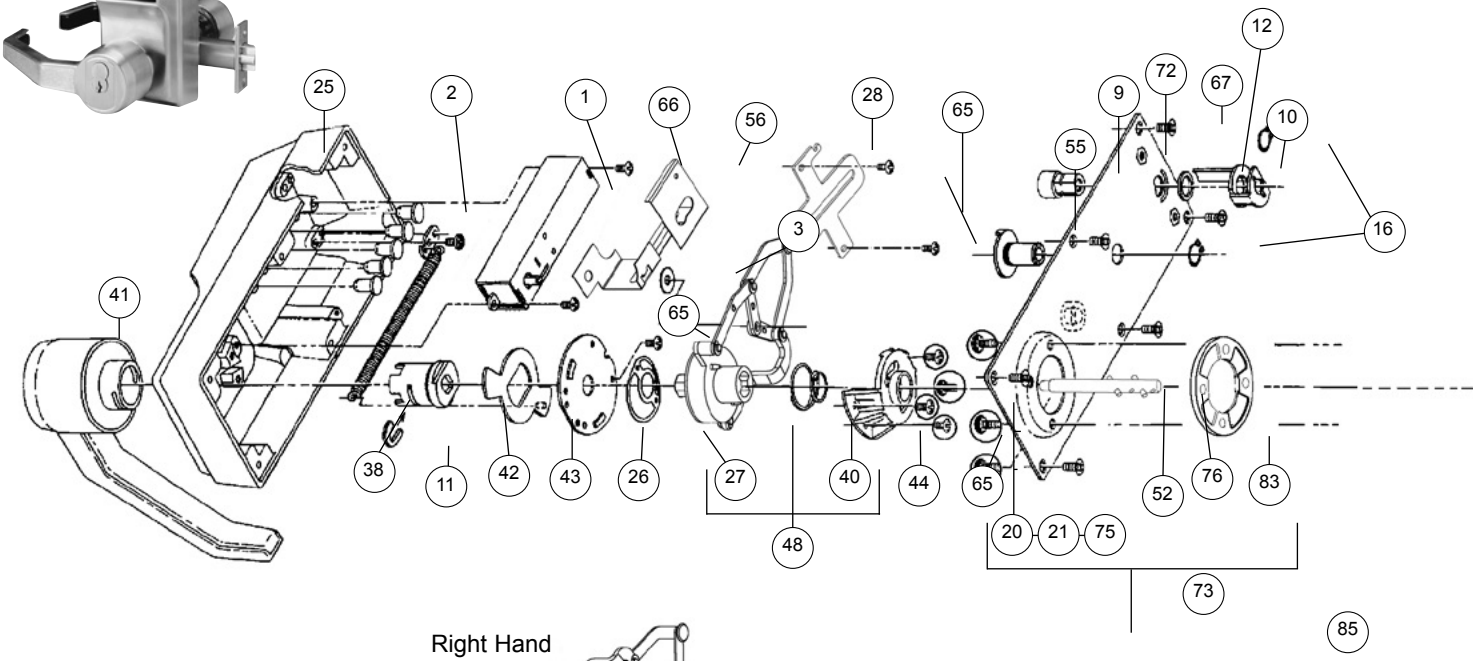

Right Hand Clutch

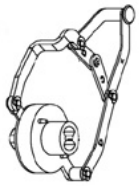

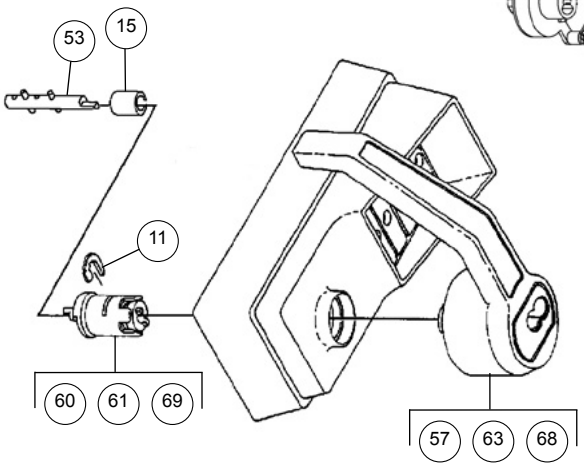

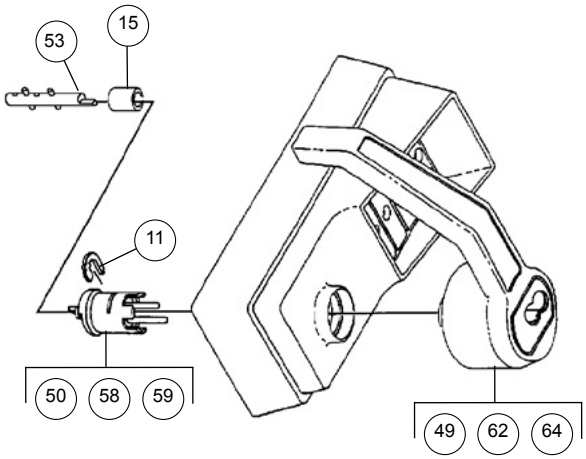

Key Override Models:
Medeco/ASSA/Yale
Schlage

Key Override Models:
Best & Equivalents
Corbin/Russwin
Sargent

See inside front cover for How to Order instructions

Simplex L1000 Series *(continued)*

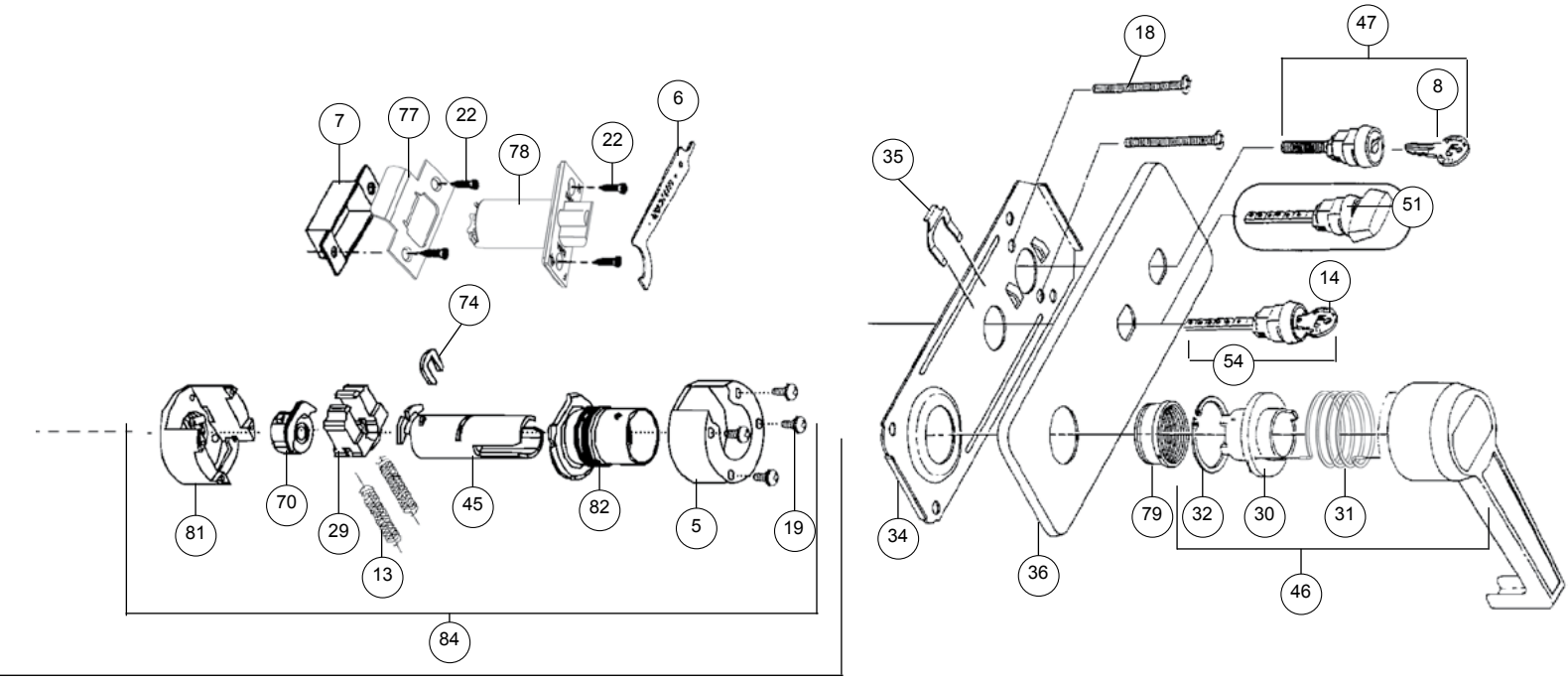

LH L1000 Series Service Kit

Left Hand: 20303800001 $165.00 each

Right Hand: 20303700001 $165.00 each

Clutch Assembly

K/O Drive Shaft

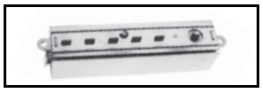

Combination Chamber

Stop Plate

Lever Return Spring

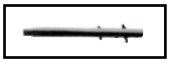

Standard Drive Shaft

Chamber Shaft Bushing

****Effective August 2013 the L1000 service kits will no longer ship with the inside lever fixed sleeve included in each service kit.**

Left Hand Kit Shown

Item	Qty/Lock	Description	Finish	Part Number	List Price
1	1	Combination Chamber (M-63/M-56) (Old # 201764-000-0)		7436600001	$90.00
2	5	Pushbuttons (10 Pack)	Black	20002410610	$12.00
		Pushbuttons (10 Pack)	Silver	20002410910	$12.00
3	1	Bushing, Shaft (5 Pack)		20002600005	$11.00
5	1	Cover for Shoe Housing		20127700001	$11.00
6	1	Installation Wrench (spanner wrench) - Code Change Tool Kit (Includes 1 ea. #6, #8)		20127800001	$10.00
7	1	Strike Box		20128700001	$9.00
8	1	DF-59 Key - Code Change Tool Kit (Includes 1 ea. #6, #8)		20127800001	$10.00
9	1	Combination Change Stud - Combination Change Actuator Kit (Includes 1 ea. #9, #10, #12, #16)		20133600001	$12.00

Simplex L1000 Series *(continued)*

Item	Qty/Lock	Description	Finish	Part Number	List Price
10	1	Combination Change Sleeve - Combination Change Actuator Kit (Includes 1 ea. #9, #10, #12, #16)		20133600001	$12.00
11	1	Front Knob Retainer Clip (5 Pack)		20134300005	$11.00
12	1	Combination Change Sleeve Washer - Combination Change Actuator Kit (Includes 1 ea. #9, #10, #12, #16)		20133600001	$12.00
13	2	Shoe Spring (For Cylindrical Drive Unit) (10 Pack)		20136600010	$10.00
14	1	Key DF-5 (For Passage Set) (2 Pack)		20142200002	$7.50
15	1	Shaft Self-Aligning Bushing (For Models 1021 & 1041)		20142500001	$10.00
16	1	Retainer Ring 3/8" I.D. (10 Pack)		20144000010	$11.00
18	2	Screw, 8-32 x 2 1/2" (For Mounting) (Includes 1 ea. #23, #76; 2 ea. #18, #83; 4 ea. #20, 21, #22, #75)	Satin Chrome	20421026D01	$11.00
		Screw, 8-32 x 2 1/2" (For Mounting) (Includes 1 ea. #23, #76; 2 ea. #18, #83; 4 ea. #20, 21, #22, #75)	Bright Brass	2042100301	$11.00
		Screw, 8-32 x 2 1/2" (For Mounting) (Includes 1 ea. #23, #76; 2 ea. #18, #83; 4 ea. #20, 21, #22, #75)	Antique Brass	2042100501	$11.00
19	4	Sems Screw, Phillips 6-32 x 1/4" R.H.M.S. (For Shoe Housing Cover) (10 Pack)		20144600010	$7.50
20	4	Sems Screw, Phillips 8-32 x 7/16" R.H.M.S. (For Spacer) (Includes 1 ea. #23, #76; 2 ea. #18, #83; 4 ea. #20, 21, #22, #75)	Satin Chrome	20421026D01	$11.00
		Sems Screw, Phillips 8-32 x 7/16" R.H.M.S. (For Spacer) (Includes 1 ea. #23, #76; 2 ea. #18, #83; 4 ea. #20, 21, #22, #75)	Bright Brass	2042100301	$11.00
		Sems Screw, Phillips 8-32 x 7/16" R.H.M.S. (For Spacer) (Includes 1 ea. #23, #76; 2 ea. #18, #83; 4 ea. #20, 21, #22, #75)	Antique Brass	2042100501	$11.00
21	4	Sems Screw, Phillips 8-32 x 5/16" R.H.M.S (For Spacer) (Includes 1 ea. #23, #76; 2 ea. #18, #83; 4 ea. #20, 21, #22, #75)	Satin Chrome	20421026D01	$11.00
		Sems Screw, Phillips 8-32 x 5/16" R.H.M.S (For Spacer) (Includes 1 ea. #23, #76; 2 ea. #18, #83; 4 ea. #20, 21, #22, #75)	Bright Brass	2042100301	$11.00
		Sems Screw, Phillips 8-32 x 5/16" R.H.M.S (For Spacer) (Includes 1 ea. #23, #76; 2 ea. #18, #83; 4 ea. #20, 21, #22, #75)	Antique Brass	2042100501	$11.00
22	4	Combination Screw, Phillips 8-32 x 3/4" (For latch and strike plate) (10 Pack)	Satin Chrome	20156526D10	$11.00
		Combination Screw, Phillips 8-32 x 3/4" (For latch and strike plate) (10 Pack)	Bright Brass	2015650310	$11.00
		Combination Screw, Phillips 8-32 x 3/4" (For latch and strike plate) (10 Pack)	Antique Brass	2015650510	$11.00
23	1	Rubber Bumper (For Door Frame) (Self Adhesive Strip of 4) (5 Pack)		20156800005	$11.00
24	1	Spacer for Medeco 5 - 6 pin Medeco/ASSA		20156900001	$16.50
25	1	Front Lock Housing	Satin Chrome	20170026D01	$82.50
		Front Lock Housing	Bright Chrome	20170002601	$82.50
		Front Lock Housing	Bright Brass	2017000301	$82.50
		Front Lock Housing	Antique Brass	2017000501	$82.50
26	1	Clutch Backing Plate		20170800001	$10.00
27	1	Double Wave Spring - Clutch Spring Kit (Includes 1 ea. #27, #40)		20176800001	$11.00
28	1	Guide Bracket		20172100001	$9.00
29	1	Retractor Shoe		20172300001	$11.00
30	1	** Inside Lever Fixed Sleeve - RH - Fixed Sleeve Kit (Includes 1 ea. #30, #31,#32)		20172700001	$39.50
		** Inside Lever Fixed Sleeve - LH- Fixed Sleeve Kit (Includes 1 ea. #30, #31,#32)		20173300001	$39.50
		Inside Lever Fixed Sleeve - RH - Fixed Sleeve Kit (Includes 1 ea. #30, #31,#32)		64855-000-01	$39.50
		Inside Lever Fixed Sleeve - LH- Fixed Sleeve Kit (Includes 1 ea. #30, #31,#32)		64856-000-01	$39.50
31	1	Inside Lever Coil Return Spring - RH		20173000001	$11.00
		Inside Lever Coil Return Spring - LH		20173200001	$11.00
32	1	Inside Lever Fixed Sleeve Retainer Clip		20173400001	$7.50
33	1	Unified Trim Plate - Standard (Not Shown on Exploded View)	Satin Chrome	20173626D01	$35.00
		Unified Trim Plate - Standard (Not Shown on Exploded View)	Bright Chrome	20173602601	$35.00
		Unified Trim Plate - Standard (Not Shown on Exploded View)	Bright Brass	2017360301	$35.00
		Unified Trim Plate - Standard (Not Shown on Exploded View)	Antique Brass	2017360501	$35.00
34	1	Reinforcing Plate		20173800001	$12.00

***When ordering an outside lever assembly for older locks, it may be necessary to order a respective outside drive sleeve assembly. (See Conversion Assemblies)**
Effective August 2013 the L1000 service kits will no longer ship with the inside lever fixed sleeve included in each service kit.
**** For use with levers with brass cup insert in lever.**

Simplex L1000 Series *(continued)*

Item	Qty/Lock	Description	Finish	Part Number	List Price
35	1	Passage Spring Clip (10 Pack)		20174000010	$11.00
36	1	Unified Trim Plate - Passage Set Model	Satin Chrome	20174526D01	$35.00
		Unified Trim Plate - Passage Set Model	Bright Chrome	20174502601	$35.00
		Unified Trim Plate - Passage Set Model	Bright Brass	2017450301	$35.00
		Unified Trim Plate - Passage Set Model	Antique Brass	2017450501	$35.00
38	1	Outside Lever Return Spring - Stop Plate Kit - RH (Includes 1 ea. #38, #43)		20177300001	$15.50
		Outside Lever Return Spring - Stop Plate Kit - LH (Includes 1 ea. #38, #43)		20177400001	$15.50
40	1	Balance Spring - Clutch Spring Kit (Includes 1 ea. #27, #40)		20176800001	$11.00
41	1	Outside Lever Handle Assembly Non Key Override* - Right Handed	Satin Chrome	20177026D01	$109.00
		Outside Lever Handle Assembly Non Key Override* - Right Handed	Bright Chrome	20177002601	$109.00
		Outside Lever Handle Assembly Non Key Override* - Right Handed	Bright Brass	2017700301	$109.00
		Outside Lever Handle Assembly Non Key Override* - Right Handed	Antique Brass	2017700501	$109.00
		Outside Lever Handle Assembly Non Key Override* - Left Handed	Satin Chrome	20177126D01	$109.00
		Outside Lever Handle Assembly Non Key Override* - Left Handed	Bright Chrome	20177102601	$109.00
		Outside Lever Handle Assembly Non Key Override* - Left Handed	Bright Brass	2017710301	$109.00
		Outside Lever Handle Assembly Non Key Override* - Left Handed	Antique Brass	2017710501	$109.00
42	1	Outside Drive Sleeve Assembly Non Key Override (Includes 1 ea. #11, #42)		20177200001	$26.50
43	1	Stop Plate - Stop Plate Kit - RH (Includes 1 ea. #38, #43)		20177300001	$15.50
		Stop Plate - Stop Plate Kit - LH (Includes 1 ea. #38, #43)		20177400001	$15.50
44	1	Clutch Cover Assembly - Right Handed		20178000001	$12.00
		Clutch Cover Assembly - Left Handed		20178100001	$12.00
45	1	Inside Drive Sleeve Assembly (Includes 1 ea. #45, #74)		20178200001	$16.50
46	1	Inside Lever - Inside Lever Kit - RH (Includes 1 ea. #30, #31, #32, #46)	Satin Chrome	20178526D01	$137.50
		Inside Lever - Inside Lever Kit - RH (Includes 1 ea. #30, #31, #32, #46)	Bright Chrome	20178502601	$137.50
46	1	Inside Lever - Inside Lever Kit - RH (Includes 1 ea. #30, #31, #32, #46)	Bright Brass	2017850301	$137.50
		Inside Lever - Inside Lever Kit - RH (Includes 1 ea. #30, #31, #32, #46)	Antique Brass	2017850501	$137.50
		Inside Lever - Inside Lever Kit - LH (Includes 1 ea. #30, #31, #32, #46)	Satin Chrome	20178626D01	$137.50
		Inside Lever - Inside Lever Kit - LH (Includes 1 ea. #30, #31, #32, #46)	Bright Chrome	20178602601	$137.50
		Inside Lever - Inside Lever Kit - LH (Includes 1 ea. #30, #31, #32, #46)	Bright Brass	2017860301	$137.50
		Inside Lever - Inside Lever Kit - LH (Includes 1 ea. #30, #31, #32, #46)	Antique Brass	2017860501	$137.50
47	1	Combination Change Plug Assembly with (2) DF59 keys (Includes 2 ea. #8)	Satin Chrome	20178726D01	$18.50
		Combination Change Plug Assembly with (2) DF59 keys (Includes 2 ea. #8)	Bright Brass	2017870301	$18.50
		Combination Change Plug Assembly with (2) DF59 keys (Includes 2 ea. #8)	Antique Brass	2017870501	$18.50
48	1	Clutch Assembly - RH (Includes 1 ea. #27, #40, #48)		20178800001	$55.00
		Clutch Assembly - LH (Includes 1 ea. #27, #40, #48)		20178900001	$55.00
49	1	Best Outside Lever Assembly* (Also fits Falcon / Arrow / Eagle & KSP / Lloyd Matheson Removable Core) - RH	Satin Chrome	20179026D01	$167.00
		Best Outside Lever Assembly* (Also fits Falcon / Arrow / Eagle & KSP / Lloyd Matheson Removable Core) - RH	Bright Chrome	20179002601	$167.00
		Best Outside Lever Assembly* (Also fits Falcon / Arrow / Eagle & KSP / Lloyd Matheson Removable Core) - RH	Bright Brass	2017900301	$167.00
		Best Outside Lever Assembly* (Also fits Falcon / Arrow / Eagle & KSP / Lloyd Matheson Removable Core) - RH	Antique Brass	2017900501	$167.00
49	1	Best Outside Lever Assembly* (Also fits Falcon / Arrow / Eagle & KSP / Lloyd Matheson Removable Core) - LH	Satin Chrome	20179126D01	$167.00
		Best Outside Lever Assembly* (Also fits Falcon / Arrow / Eagle & KSP / Lloyd Matheson Removable Core) - LH	Bright Chrome	20179102601	$167.00
		Best Outside Lever Assembly* (Also fits Falcon / Arrow / Eagle & KSP / Lloyd Matheson Removable Core) - LH	Bright Brass	2017910301	$167.00
		Best Outside Lever Assembly* (Also fits Falcon / Arrow / Eagle & KSP / Lloyd Matheson Removable Core) - LH	Antique Brass	2017910501	$167.00

Simplex L1000 Series *(continued)*

Item	Qty/Lock	Description	Finish	Part Number	List Price
50	1	Best Outside Drive Sleeve Assembly (Also fits Falcon / Arrow / Eagle & KSP / Lloyd Matheson Removable Core) (Includes 1 ea. #11, #50)		20179200001	$36.50
51	1	Passage Set Thumbturn Plug Assembly (Includes 1 ea. #35, #51)	Satin Chrome	20180726D01	$18.50
		Passage Set Thumbturn Plug Assembly (Includes 1 ea. #35, #51)	Bright Brass	2018070301	$18.50
		Passage Set Thumbturn Plug Assembly (Includes 1 ea. #35, #51)	Antique Brass	2018070501	$18.50
52	1	Drive Shaft Assembly for Non Key Override (Standard)		20181200001	$16.50
53	1	Drive Shaft Assembly for Key Override		20181300001	$20.00
54	1	Passage Set Key Turn Plug Assembly with (2) DF-5 keys	Satin Chrome	20181826D01	$18.50
		Passage Set Key Turn Plug Assembly with (2) DF-5 keys	Bright Brass	2018180301	$18.50
		Passage Set Key Turn Plug Assembly with (2) DF-5 keys	Antique Brass	2018180501	$18.50
55	1	Chamber Release Cam - Passage Kit (Includes 1 ea. #16, #55, #56) (For Passage Set)		20182500001	$22.00
56	1	Chamber Release - Passage Kit (Includes 1 ea. #16, #55, #56) (For Passage Set)		20182500001	$22.00
57	1	Schlage Outside Lever Assembly - RH	Satin Chrome	20182926D01	$167.00
		Schlage Outside Lever Assembly - RH	Bright Chrome	20182902601	$167.00
		Schlage Outside Lever Assembly - RH	Bright Brass	2018290301	$167.00
		Schlage Outside Lever Assembly - RH	Antique Brass	2018290501	$167.00
		Schlage Outside Lever Assembly - LH	Satin Chrome	20183026D01	$167.00
		Schlage Outside Lever Assembly - LH	Bright Chrome	20183002601	$167.00
		Schlage Outside Lever Assembly - LH	Bright Brass	2018300301	$167.00
		Schlage Outside Lever Assembly - LH	Antique Brass	2018300501	$167.00
58	1	Sargent Outside Drive Sleeve Assembly (Includes 1 ea. #11, #58)		20183100001	$46.00
59	1	Corbin / Russwin Outside Drive Sleeve Assembly (Includes 1 ea. #11, #59)		20183200001	$46.00
60	1	Schlage Outside Drive Sleeve Assembly (Includes 1 ea. #11, #60)		20184000001	$46.00
61	1	Medeco / ASSA / Yale Outside Drive Sleeve Assembly (Old ASSA #204010) (Includes 1 ea. #11, #61)		20184200001	$46.00
62	1	Sargent Outside Lever Assembly - RH	Satin Chrome	20192526D01	$167.00
		Sargent Outside Lever Assembly - RH	Bright Chrome	20192502601	$167.00
		Sargent Outside Lever Assembly - RH	Bright Brass	2019250301	$167.00
		Sargent Outside Lever Assembly - RH	Antique Brass	2019250501	$167.00
		Sargent Outside Lever Assembly - LH	Satin Chrome	20192626D01	$167.00
		Sargent Outside Lever Assembly - LH	Bright Chrome	20192602601	$167.00
		Sargent Outside Lever Assembly - LH	Bright Brass	2019260301	$167.00
		Sargent Outside Lever Assembly - LH	Antique Brass	2019260501	$167.00
63	1	Medeco / ASSA / Yale Outside Lever Assembly (Old #s for ASSA 204008 RH, 204009 LH) RH	Satin Chrome	20192726D01	$167.00
		Medeco / ASSA / Yale Outside Lever Assembly (Old #s for ASSA 204008 RH, 204009 LH) RH	Bright Chrome	20192702601	$167.00
		Medeco / ASSA / Yale Outside Lever Assembly (Old #s for ASSA 204008 RH, 204009 LH) RH	Bright Brass	2019270301	$167.00
		Medeco / ASSA / Yale Outside Lever Assembly (Old #s for ASSA 204008 RH, 204009 LH) RH	Antique Brass	2019270501	$167.00
		Medeco / ASSA / Yale Outside Lever Assembly (Old #s for ASSA 204008 RH, 204009 LH) LH	Satin Chrome	20192826D01	$167.00
		Medeco / ASSA / Yale Outside Lever Assembly (Old #s for ASSA 204008 RH, 204009 LH) LH	Bright Chrome	20192802601	$167.00
		Medeco / ASSA / Yale Outside Lever Assembly (Old #s for ASSA 204008 RH, 204009 LH) LH	Bright Brass	2019280301	$167.00
		Medeco / ASSA / Yale Outside Lever Assembly (Old #s for ASSA 204008 RH, 204009 LH) LH	Antique Brass	2019280501	$167.00
64	1	Corbin / Russwin Outside Lever Assembly - RH	Satin Chrome	20192926D01	$167.00
		Corbin / Russwin Outside Lever Assembly - RH	Bright Chrome	20192902601	$167.00
		Corbin / Russwin Outside Lever Assembly - RH	Bright Brass	2019290301	$167.00
		Corbin / Russwin Outside Lever Assembly - RH	Antique Brass	2019290501	$167.00
		Corbin / Russwin Outside Lever Assembly - LH	Satin Chrome	20193026D01	$167.00
		Corbin / Russwin Outside Lever Assembly - LH	Bright Chrome	20193002601	$167.00
		Corbin / Russwin Outside Lever Assembly - LH	Bright Brass	2019300301	$167.00
		Corbin / Russwin Outside Lever Assembly - LH	Antique Brass	2019300501	$167.00

Simplex L1000 Series *(continued)*

Item	Qty/Lock	Description	Finish	Part Number	List Price
65	5	Sems Screw, Phillips 6-32 x 7/16" (11 mm) R.H.M.S. (For clutch cover, clutch backing plate, and guide bracket) (Old # 201448-022-10) (Includes 10 ea. #65, #66, #67) Screw Pack (10 ea. 6-32 x 3/8", 5/16", 7/16")		6477600001	$11.00
66	2	Sems Screw, Phillips 6-32 x 5/16" (8 mm) R.H.M.S. (For comb. chamber) (Old # 201447-022-10) (Includes 10 ea. #65, #66, #67) Screw Pack (10 ea. 6-32 x 3/8", 5/16", 7/16")		6477600001	$11.00
67	6	Screw Phillips 6-32 x 3/8" F.H.M.S. (For Back Plate) (Old # 201444-022-10) (Includes 10 ea. #65, #66, #67) Screw Pack (10 ea. 6-32 x 3/8", 5/16", 7/16")		6477600001	$11.00
69	1	ASSA Outside Drive Sleeve Assembly (Includes 1 ea. #11, #69)		20401000001	$46.00
70	1	Drive Insert		20401500001	$23.00
72	1	Backplate (see #73)			N/A
73	1	Backplate Assembly (Includes 1ea, of #9, #10, #12, #16, #72)		20420426D01	$23.00
74	1	Inside Knob Retainer Clip (Old # 201344) (5 Pack)		20412000005	$11.00
75	4	Sems Screw, Phillips 8-32 x 5/16" R.H.M.S. (For spacer) (Old # 201449) (Includes 1 ea. #23, #76; 2 ea. #18, #83; 4 ea. #20, #21, #22, #75)	Satin Chrome	20421026D01	$11.00
		Sems Screw, Phillips 8-32 x 5/16" R.H.M.S. (For spacer) (Old # 201449) (Includes 1 ea. #23, #76; 2 ea. #18, #83; 4 ea. #20, #21, #22, #75)	Bright Brass	2042100301	$11.00
		Sems Screw, Phillips 8-32 x 5/16" R.H.M.S. (For spacer) (Old # 201449) (Includes 1 ea. #23, #76; 2 ea. #18, #83; 4 ea. #20, #21, #22, #75)	Antique Brass	2042100501	$11.00
76	1	Cross Pin .100" (2.5 mm) x .500 (1.27 mm) long (Includes 1 ea. #23, #76; 2 ea. #18, #83; 4 ea. #20, #21, #22, #75)	Satin Chrome	20421026D01	$11.00
		Cross Pin .100" (2.5 mm) x .500 (1.27 mm) long (Includes 1 ea. #23, #76; 2 ea. #18, #83; 4 ea. #20, #21, #22, #75)	Bright Brass	2042100301	$11.00
		Cross Pin .100" (2.5 mm) x .500 (1.27 mm) long (Includes 1 ea. #23, #76; 2 ea. #18, #83; 4 ea. #20, #21, #22, #75)	Antique Brass	2042100501	$11.00
77	1	Standard “T" Strike Plate (Old # 201288 or 204167)	Satin Chrome	20422726D01	$11.00
		Standard “T" Strike Plate (Old # 201288 or 204167)	Bright Brass	2042270301	$11.00
		Standard “T" Strike Plate (Old # 201288 or 204167)	Antique Brass	2042270501	$11.00
		Standard “T" Strike Plate (Old # 201288 or 204167)	Bright Chrome	20422702601	$11.00
		ASA Strike (For 4 7/8" (105 mm) long cutout) (Old # 201413 or 1000-15-26D)	Satin Chrome	20411926D01	$12.00
		ASA Strike (For 4 7/8" (105 mm) long cutout) (Old # 201413 or 1000-15-03)	Bright Brass	2041190301	$12.00
		ASA Strike (For 4 7/8" (105 mm) long cutout) (Old # 201413 or 1000-15-05)	Antique Brass	2041190501	$12.00
78	1	1/2" (13 mm) Floating Front Throw Latch 2 3/4" (70 mm) Backset	Satin Chrome	20416826D01	$38.50
		1/2" (13 mm) Floating Front Throw Latch 2 3/4" (70 mm) Backset	Bright Brass	2041680301	$38.50
		1/2" (13 mm) Floating Front Throw Latch 2 3/4" (70 mm) Backset	Antique Brass	2041680501	$38.50
		3/4" (19mm) Brass Latch - carries 3-hour UL/ULC fire rating for “A" labeled doors. 2 3/4" (70 mm) backset. Beveled front.	Satin Chrome	20114426D01	$66.00
		3/4" (19mm) Brass Latch - carries 3-hour UL/ULC fire rating for “A" labeled doors. 2 3/4" (70 mm) backset. Beveled front.	Bright Brass	2011440301	$66.00
		3/4" (19mm) Brass Latch - carries 3-hour UL/ULC fire rating for “A" labeled doors. 2 3/4" (70 mm) backset. Beveled front.	Antique Brass	2011440501	$66.00
		Latch 1/2" Floating Face, 2 3/8" Backset - 3 Hour Fire Rated (Includes Screws)	Satin Chrome	7518526D01	$38.50
		Latch 1/2" Floating Face, 2 3/8" Backset - 3 Hour Fire Rated (Includes Screws)	Bright Brass	751850301	$38.50
		Latch 1/2" Floating Face, 2 3/8" Backset - 3 Hour Fire Rated (Includes Screws)	Antique Brass	751850501	$38.50
79	1	Thread Ring	Satin Chrome	20416926D01	$12.00
		Thread Ring	Bright Chrome	20416902601	$12.00
		Thread Ring	Bright Brass	2041690301	$12.00
		Thread Ring	Antique Brass	2041690501	$12.00
81	1	Shoe Retainer and Bridge Assembly		20419900001	$37.50
82	1	Shoe Retainer Cap Assembly	Satin Chrome	20420026D01	$32.00
		Shoe Retainer Cap Assembly	Bright Chrome	20420002601	$32.00
		Shoe Retainer Cap Assembly	Bright Brass	2042000301	$32.00
		Shoe Retainer Cap Assembly	Antique Brass	2042000501	$29.50

Simplex L1000 Series *(continued)*

Item	Qty/Lock	Description	Finish	Part Number	List Price
83	1	1/4" Spacer, Door Thickness (Old # 201449) (Includes 1 ea. #23, #76; 2 ea. #18, #83; 4 ea. #20, #21, #22, #75)	Satin Chrome	20421026D01	$11.00
		1/4" Spacer, Door Thickness (Old # 201449) (Includes 1 ea. #23, #76; 2 ea. #18, #83; 4 ea. #20, #21, #22, #75)	Bright Brass	2042100301	$11.00
		1/4" Spacer, Door Thickness (Old # 201449) (Includes 1 ea. #23, #76; 2 ea. #18, #83; 4 ea. #20, #21, #22, #75)	Antique Brass	2042100501	$11.00
84	1	Cylindrical Drive Unit Assembly (Includes 1 ea. #5, #29, #45, #70, #74, #81, #82; 2 ea. #13; 4 ea. #19)	Satin Chrome	20420226D01	$103.50
		Cylindrical Drive Unit Assembly (Includes 1 ea. #5, #29, #45, #70, #74, #81, #82; 2 ea. #13; 4 ea. #19)	Bright Chrome	20420202601	$103.50
		Cylindrical Drive Unit Assembly (Includes 1 ea. #5, #29, #45, #70, #74, #81, #82; 2 ea. #13; 4 ea. #19)	Bright Brass	2042020301	$103.50
		Cylindrical Drive Unit Assembly (Includes 1 ea. #5, #29, #45, #70, #74, #81, #82; 2 ea. #13; 4 ea. #19)	Antique Brass	2042020501	$103.50
85	1	Back Plate Assembly (Includes 1 ea. #73, #83, #84; 4 ea. #20) - LH	Satin Chrome	20420426D01	$121.00
		Back Plate Assembly (Includes 1 ea. #73, #83, #84; 4 ea. #20) - LH	Bright Brass	2042040301	$121.00
		Back Plate Assembly (Includes 1 ea. #73, #83, #84; 4 ea. #20) - LH	Antique Brass	2042040501	$121.00
		Back Plate Assembly (Includes 1 ea. #73, #83, #84; 4 ea. #20) - RH	Satin Chrome	20420526D01	$121.00
		Back Plate Assembly (Includes 1 ea. #73, #83, #84; 4 ea. #20) - RH	Bright Brass	2042050301	$121.00
		Back Plate Assembly (Includes 1 ea. #73, #83, #84; 4 ea. #20) - RH	Antique Brass	2042050501	$121.00
86	1	Screw Pack (Includes 1 ea. #23, #76; 2 ea. #18, #83; 4 ea. #20, #21, #22, #75) (Not shown in exploded view)	Satin Chrome	20421026D01	$11.00
		Screw Pack (Includes 1 ea. #23, #76; 2 ea. #18, #83; 4 ea. #20, #21, #22, #75) (Not shown in exploded view)	Bright Brass	2042100301	$11.00
		Screw Pack (Includes 1 ea. #23, #76; 2 ea. #18, #83; 4 ea. #20, #21, #22, #75) (Not shown in exploded view)	Antique Brass	2042100501	$11.00
87	1	Installation Hardware Kit (Includes 1 ea. #6, #7, #47, #77, #79, #86; 2 ea. #83) (Not shown in exploded view)	Satin Chrome	20421126D11	$38.50
		Installation Hardware Kit (Includes 1 ea. #6, #7, #47, #77, #79, #86; 2 ea. #83) (Not shown in exploded view)	Bright Brass	2042110311	$38.50
		Installation Hardware Kit (Includes 1 ea. #6, #7, #47, #77, #79, #86; 2 ea. #83) (Not shown in exploded view)	Antique Brass	2042110511	$38.50

Additional Kits and Accessories

		Lubriplate Aero Grease Tubes		6475400001	$14.50
		Best Key Override Spacer (not shown)		3800-00-3007	$24.00
		Sargent Key Override Spacer (not shown)		20402900001	$24.00
		Corbin-Russwin Key Override Spacer (not shown)		20402800001	$24.00
		Latch Extension Assembly - Converts to 3 3/4" (95mm) backset		20402200001	$35.00
		Latch Extension Assembly - Converts to 5" (130mm) backset		20402300001	$31.00
		3/4" (19 mm) Flat Front Latch - carries 3-hour UL/ULC fire rating for “A" labeled doors. 2 3/4" (70 mm) backset	Bright Brass	2016050301	$66.00
		3/4" (19 mm) Flat Front Latch - carries 3-hour UL/ULC fire rating for “A" labeled doors. 2 3/4" (70 mm) backset	Antique Brass	2016050501	$66.00
		3/4" (19 mm) Flat Front Latch - carries 3-hour UL/ULC fire rating for “A" labeled doors. 2 3/4" (70 mm) backset	Satin Chrome	20160526D01	$66.00
		ASA Roller Strike (For 4 7/8" (105 mm) long cutout) (old #1000-14-03)	Bright Brass	2018210301	$44.00
		ASA Roller Strike (For 4 7/8" (105 mm) long cutout) (old #1000-14-05)	Antique Brass	2018210501	$44.00
		ASA Roller Strike (For 4 7/8" (105 mm) long cutout) (old #1000-14-26D)	Satin Chrome	20182126D01	$44.00

Simplex L1000 Series *(continued)*

Additional Kits and Accessories

		3/4" (19 mm) Brass Latch - carries 3-hour UL/ULC fire rating for “A" labeled doors. 2 3/4" (70 mm) backset. Beveled front. (For L1076 privacy Model only)	Bright Brass	2040040301	$66.00
		3/4" (19 mm) Brass Latch - carries 3-hour UL/ULC fire rating for “A" labeled doors. 2 3/4" (70 mm) backset. Beveled front. (For L1076 privacy Model only)	Antique Brass	2040040501	$66.00
		3/4" (19 mm) Brass Latch - carries 3-hour UL/ULC fire rating for “A" labeled doors. 2 3/4" (70 mm) backset. Beveled front. (For L1076 privacy Model only)	Satin Chrome	20400426D01	$66.00
		1/2" (13 mm) Brass Latch - carries 3-hour UL/ULC fire rating for “A" labeled doors. 2 3/4" (70 mm) backset. Fixed beveled front face.	Satin Chrome	5507126D01	$38.50
		1/2" (13 mm) Brass Latch - carries 3-hour UL/ULC fire rating for “A" labeled doors. 2 3/4" (70 mm) backset. Fixed beveled front face.	Bright Brass	550710301	$38.50
		1/2" (13 mm) Brass Latch - carries 3-hour UL/ULC fire rating for “A" labeled doors. 2 3/4" (70 mm) backset. Fixed beveled front face.	Antique Brass	550710501	$38.50

Lever Conversion Assemblies

	Schlage Conversion Assembly (S) - RH	Satin Chrome	20184526D01	$176.00
	Schlage Conversion Assembly (S) - RH	Bright Chrome	20184502601	$176.00
	Schlage Conversion Assembly (S) - RH	Bright Brass	2018450301	$176.00
	Schlage Conversion Assembly (S) - RH	Antique Brass	2018450501	$176.00
	Schlage Conversion Assembly (S) - LH	Satin Chrome	20184626D01	$176.00
	Schlage Conversion Assembly (S) - LH	Bright Chrome	20184602601	$176.00
	Schlage Conversion Assembly (S) - LH	Bright Brass	2018460301	$176.00
	Schlage Conversion Assembly (S) - LH	Antique Brass	2018460501	$176.00
	Sargent Conversion Assembly (R) - RH	Satin Chrome	20193126D01	$176.00
	Sargent Conversion Assembly (R) - RH	Bright Chrome	20193102601	$176.00
	Sargent Conversion Assembly (R) - RH	Bright Brass	2019310301	$176.00
	Sargent Conversion Assembly (R) - RH	Antique Brass	2019310501	$176.00
	Sargent Conversion Assembly (R) - LH	Satin Chrome	20193226D01	$176.00
	Sargent Conversion Assembly (R) - LH	Bright Chrome	20193202601	$176.00
	Sargent Conversion Assembly (R) - LH	Bright Brass	2019320301	$176.00
	Sargent Conversion Assembly (R) - LH	Antique Brass	2019320501	$176.00
	Medeco / ASSA / Yale Conversion Assembly - Request Spacers 201569 for 5 - 6 pin Medeco/ASSA. (M) (Old # for ASSA 204013 RH, 204014 LH) - RH	Satin Chrome	20193326D01	$176.00
	Medeco / ASSA / Yale Conversion Assembly - Request Spacers 201569 for 5 - 6 pin Medeco/ASSA. (M) (Old # for ASSA 204013 RH, 204014 LH) - RH	Bright Chrome	20193302601	$176.00
	Medeco / ASSA / Yale Conversion Assembly - Request Spacers 201569 for 5 - 6 pin Medeco/ASSA. (M) (Old # for ASSA 204013 RH, 204014 LH) - RH	Bright Brass	2019330301	$176.00
	Medeco / ASSA / Yale Conversion Assembly - Request Spacers 201569 for 5 - 6 pin Medeco/ASSA. (M) (Old # for ASSA 204013 RH, 204014 LH) - RH	Antique Brass	2019330501	$176.00
	Medeco / ASSA / Yale Conversion Assembly - Request Spacers 201569 for 5 - 6 pin Medeco/ASSA. (M) (Old # for ASSA 204013 RH, 204014 LH) - LH	Satin Chrome	20193426D01	$176.00
	Medeco / ASSA / Yale Conversion Assembly - Request Spacers 201569 for 5 - 6 pin Medeco/ASSA. (M) (Old # for ASSA 204013 RH, 204014 LH) - LH	Bright Chrome	20193402601	$176.00
	Medeco / ASSA / Yale Conversion Assembly - Request Spacers 201569 for 5 - 6 pin Medeco/ASSA. (M) (Old # for ASSA 204013 RH, 204014 LH) - LH	Bright Brass	2019340301	$176.00
	Medeco / ASSA / Yale Conversion Assembly - Request Spacers 201569 for 5 - 6 pin Medeco/ASSA. (M) (Old # for ASSA 204013 RH, 204014 LH) - LH	Antique Brass	2019340501	$176.00

Simplex L1000 Series *(continued)*

Lever Conversion Assemblies

		Best / Falcon / Arrow / Eagle / KSP / Lloyd Matheson Conversion Assembly (B) - RH	Satin Chrome	20193526D01	$176.00
		Best / Falcon / Arrow / Eagle / KSP / Lloyd Matheson Conversion Assembly (B) - RH	Bright Chrome	20193502601	$176.00
		Best / Falcon / Arrow / Eagle / KSP / Lloyd Matheson Conversion Assembly (B) - RH	Bright Brass	2019350301	$176.00
		Best / Falcon / Arrow / Eagle / KSP / Lloyd Matheson Conversion Assembly (B) - RH	Antique Brass	2019350501	$176.00
		Best / Falcon / Arrow / Eagle / KSP / Lloyd Matheson Conversion Assembly (B) - LH	Satin Chrome	20193626D01	$176.00
		Best / Falcon / Arrow / Eagle / KSP / Lloyd Matheson Conversion Assembly (B) - LH	Bright Chrome	20193602601	$176.00
		Best / Falcon / Arrow / Eagle / KSP / Lloyd Matheson Conversion Assembly (B) - LH	Bright Brass	2019360301	$176.00
		Best / Falcon / Arrow / Eagle / KSP / Lloyd Matheson Conversion Assembly (B) - LH	Antique Brass	2019360501	$176.00
		Corbin / Russwin Conversion Assembly (C) - RH	Satin Chrome	20193726D01	$176.00
		Corbin / Russwin Conversion Assembly (C) - RH	Bright Chrome	20193702601	$176.00
		Corbin / Russwin Conversion Assembly (C) - RH	Bright Brass	2019370301	$176.00
		Corbin / Russwin Conversion Assembly (C) - RH	Antique Brass	2019370501	$176.00
		Corbin / Russwin Conversion Assembly (C) - LH	Satin Chrome	20193826D01	$176.00
		Corbin / Russwin Conversion Assembly (C) - LH	Bright Chrome	20193802601	$176.00
		Corbin / Russwin Conversion Assembly (C) - LH	Bright Brass	2019380301	$176.00
		Corbin / Russwin Conversion Assembly (C) - LH	Antique Brass	2019380501	$176.00

Use these conversion assemblies to convert an existing L1000 Series lock from standard to key override, or from one key override to another.

Parts availability may be limited on older component parts no longer used in production units.

Simplex EE1000 Series

Outside

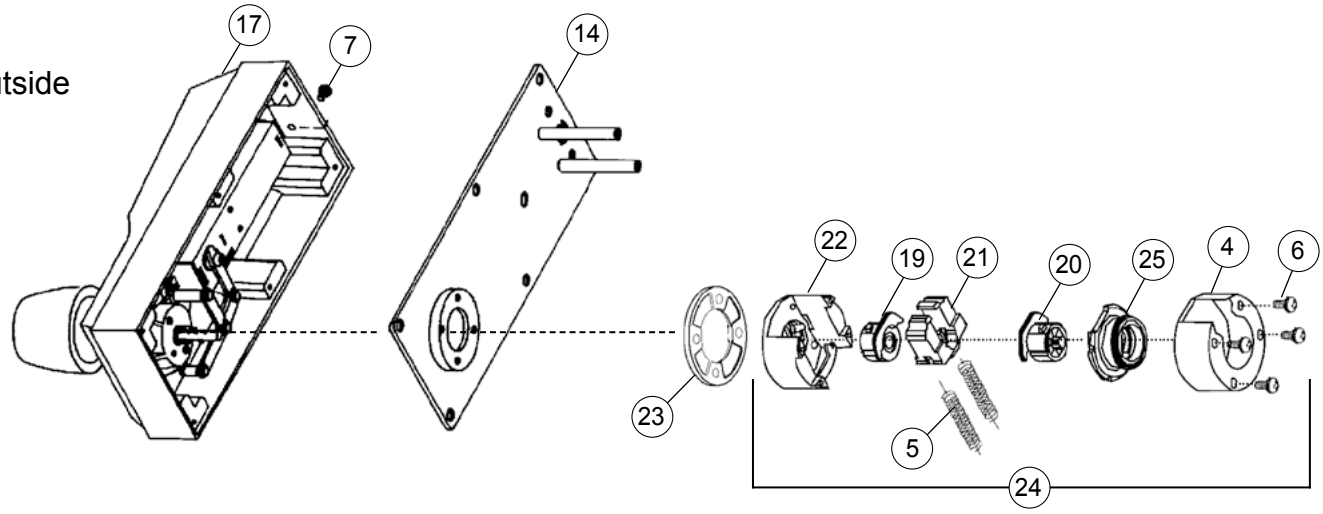

Inside

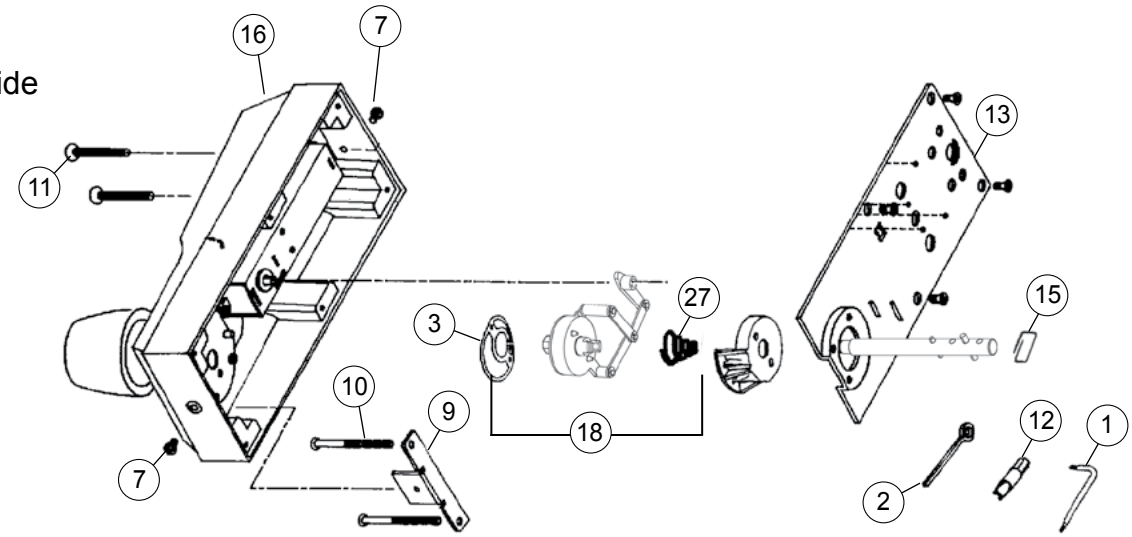

See inside front cover for How to Order instructions

Simplex EE1000 Series *(continued)*

EE1000 Series Service Kit

20303600001 $125.00 each

* Requires two (2) kits to service both sides of lock.

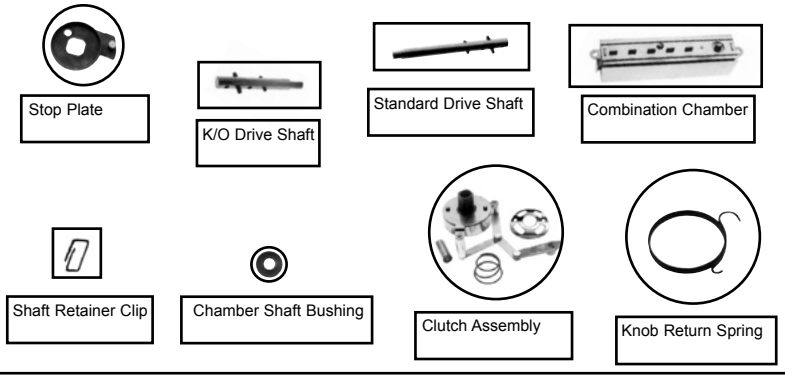

Item	Qty/Lock	Description	Finish	Part Number	List Price
1	1	Torx Anti-Tamper Wrench - Code Change Tool/Screw Kit (Includes 1 ea. #1, #2, #7)	Satin Chrome	7454326D01	$13.00
		Torx Anti-Tamper Wrench - Code Change Tool/Screw Kit (Includes 1 ea. #1, #2, #7)	Bright Brass	745430301	$13.00
2	1	Code Change Tool - Code Change Tool/Screw Kit (Includes 1 ea. #1, #2, #7	Satin Chrome	7454326D01	$13.00
		Code Change Tool - Code Change Tool/Screw Kit (Includes 1 ea. #1, #2, #7	Bright Brass	745430301	$13.00
3	1	Double Wave Spring - Clutch Spring Kit (Includes 1 ea. #3, #27)		20101600001	$11.00
4	1	Cover for Shoe Housing		20127700001	$11.00
5	2	Shoe Springs		20136600010	$10.00
6	4	Sems screw Phillips 6-32 x 1/4" (11 mm) R.H.M.S. (for shoe housing cover)		20144600010	$7.50
7	1	Combination Change Screw	Satin Chrome	20187126D05	$13.00
		Combination Change Screw	Bright Brass	2018710305	$13.00
		Combination Change Screw	Antique Brass	2018710505	$13.00
8	1	Combination Change Bracket (For use on older models only)		20188200001	$12.00
9	1	Lock Mounting Bracket		20190500001	$20.00
10	2	Flat Phillips Head Screw 2 15/16" x 1/32"		20190600002	$16.50
11	2	Spanner Screw – Tamper Proof		20190700010	$26.50
12	1	2-#10 Size Insert Bit (fits #11)		20191100002	$39.50
13	1	Inside Lock Cover Plate Assembly		20191200001	$54.00
14	1	Outside Lock Cover Plate Assembly		20191600001	$48.50
15	1	Retainer Clip (Drive Shaft)		20191800002	$11.00
16	1	Housing (Inside)	Satin Chrome	20192326D01	$95.50
		Housing (Inside)	Bright Brass	2019230301	$95.50
		Housing (Inside)	Antique Brass	2019230501	$95.50
17	1	Housing (Outside)	Satin Chrome	20192426D01	$95.50
		Housing (Outside)	Bright Brass	2019240301	$95.50
		Housing (Outside)	Antique Brass	2019240501	$95.50
18	1	Clutch Assembly (EE1000 Only) (Includes 1 ea. #3, #18, #27)		20195600001	$39.50
19	1	Drive Insert		20401500001	$23.00
20	1	Drive Insert (EE1000 Only)		20416400001	$12.00
21	1	Retractor Shoe		20416500001	$14.50
22	1	Shoe Retainer and Bridge		20419900001	$37.50
23	1	Spacer Kit (Includes 1 ea. #23, 4 ea. #6, various door thickness screws)	Satin Chrome	20421026D01	$11.00
		Spacer Kit (Includes 1 ea. #23, 4 ea. #6, various door thickness screws)	Bright Brass	2042100301	$11.00
		Spacer Kit (Includes 1 ea. #23, 4 ea. #6, various door thickness screws)	Antique Brass	2042100501	$11.00

Item	Qty/Lock	Description	Finish	Part Number	List Price
24	1	Cylindrical Drive Unit Assembly (Includes 1 ea. #19, #20, #21, #22, #25, #28; 2 ea. #5; 4 ea. #6)		20420800001	$106.50
25	1	Shoe Retainer Cap Assembly		20420900001	$32.00
26	1	Installation Hardware Kit (Not Shown in exploded view)	Bright Brass	2042120311	$53.00
		Installation Hardware Kit (Not Shown in exploded view)	Antique Brass	2042120511	$53.00
		Installation Hardware Kit (Not Shown in exploded view)	Satin Chrome	20421226D11	$53.00
27	1	Clutch Balance Spring - Clutch Spring Kit (Includes 1 ea. #3, #27)		20101600001	$11.00

Additional Kits and Accessories

		Lubriplate Aero Grease Tubes		6475400001	$14.50
		Best Key Override Spacer (not shown)		3800-00-3007	$24.00
		Sargent Key Override Spacer (not shown)		20402800001	$24.00
		Corbin-Russwin Key Override Spacer (not shown)		20402900001	$24.00

Notes

• See 1000 Series Exploded View and Replacement Parts on pages 16-23 for parts not shown or numbered on this page.

• Service kit can be used on both sides of lock
*(Requires (2) kits to service both sides)

* All EE1000 Series Locksets with a serial number consisting of three letters followed by five digits may have used the code change bracket (Part No. 201882)

• Lubriplate Aero grease is the “only" lubricant that should be used.

Parts availability may be limited on older component parts no longer used in production units.

Simplex 8100 Series

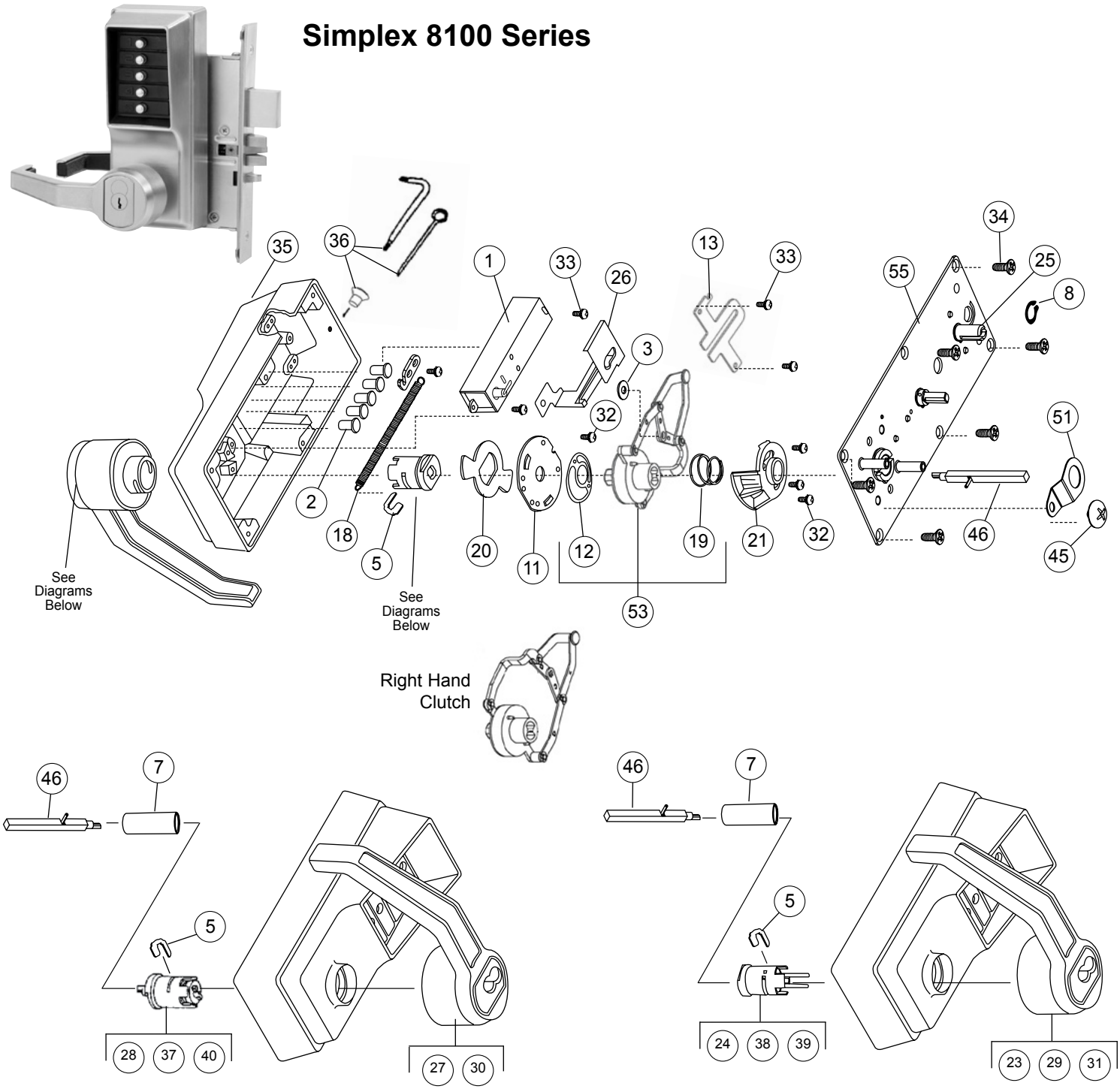

Key Override Models:
Medeco/ASSA/Yale
Schlage

Key Override Models:
Best & Equivalents
Corbin/Russwin
Sargent

Simplex 8100 Series *(continued)*

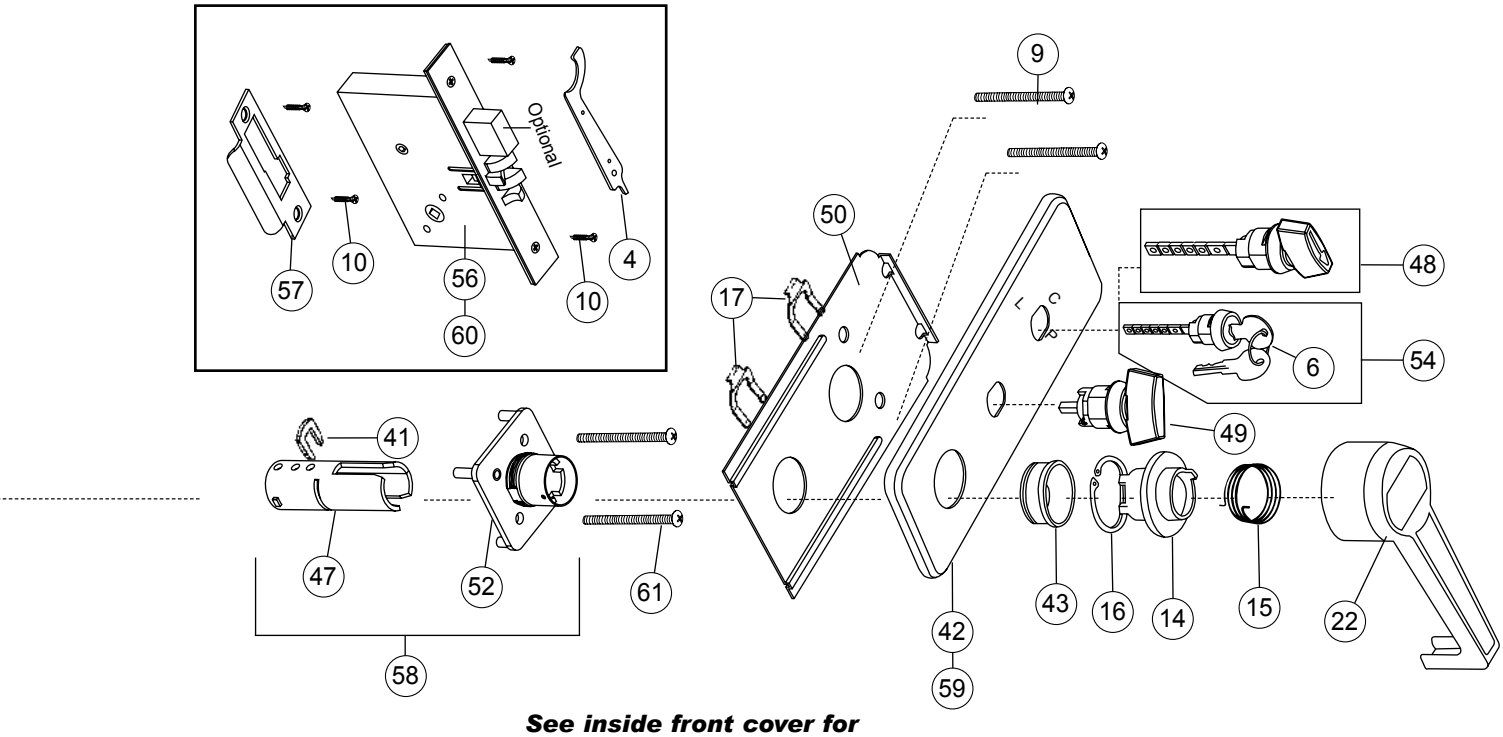

See inside front cover for How to Order instructions

Item	Qty/Lock	Description	Finish	Part Number	List Price
1	1	Combination Chamber (M-56/M-63)		7436600001	$90.00
2	5	Pushbuttons (10 Pack)	Black	20002410610	$12.00
		Pushbuttons (10 Pack)	Silver	20002410910	$12.00
3	1	Bushing, Shaft (5 Pack)		20002600005	$11.00
4	1	Installation Wrench (spanner wrench) - Code Change Tool Kit (Includes 1 ea. #4 and 2 ea. DF-59 keys; DF-59 keys not used on 8100)		20127800001	$10.00
5	1	Front Lever Retainer Clip (5 Pack)		20134300005	$11.00
6	1	Key DF-5 (For Passage and Lockout) (2 Pack)		20142200002	$7.50
7	1	Shaft Self-Aligning Bushing		20142500001	$10.00
8	1	Retaining Ring 3/8" I.D. (10 Pack)		20144000010	$11.00
9	2	Screw, 8-32 x 2 1/2" Kit (For Mounting) (Includes 2 ea. #9)	Satin Chrome	20421026D01	$11.00
		Screw, 8-32 x 2 1/2" Kit (For Mounting) (Includes 2 ea. #9)	Bright Brass	2042100301	$11.00
		Screw, 8-32 x 2 1/2" Kit (For Mounting) (Includes 2 ea. #9)	Antique Brass	2042100501	$11.00
10	4	Combination Screw, Phillips 8-32 x 3/4" (10 Pack)	Satin Chrome	20156526D10	$11.00
		Combination Screw, Phillips 8-32 x 3/4" (10 Pack)	Bright Brass	2015650310	$11.00
		Combination Screw, Phillips 8-32 x 3/4" (10 Pack)	Antique Brass	2015650510	$11.00
11	1	Clutch Backing Plate		20170800001	$10.00
12	1	Wave Spring - Clutch Spring Kit (L1000 / 8100) (Includes 1 ea. #12, #19)		20176800001	$11.00
13	1	Guide Bracket		20172100001	$9.00

Simplex 8100 Series *(continued)*

Item	Qty/Lock	Description	Finish	Part Number	List Price
14*	1	Inside Lever Fixed Sleeve - RH - Fixed Sleeve Kit (Includes 1 ea. #14, #15, #16)		20172700001	$39.50
		Inside Lever Fixed Sleeve - LH - Fixed Sleeve Kit (Includes 1 ea. #14, #15, #16)		20173300001	$39.50
		**Inside Lever Fixed Sleeve - RH - Fixed Sleeve Kit (Includes 1 ea. #14, #15, #16)		64855-000-01	$39.50
		**Inside Lever Fixed Sleeve - LH - Fixed Sleeve Kit (Includes 1 ea. #14, #15, #16)		64856-000-01	$39.50
15	1	Inside Lever Coil Return Spring - RH		20173000001	$11.00
		Inside Lever Coil Return Spring - LH		20173200001	$11.00
16	1	Inside Lever Fixed Sleeve Retainer Clip		20173400001	$7.50
17	2	Passage Spring Clip (for passage and lockout) (10 Pack)		20174000010	$11.00
18	1	Outside Lever Return Spring - Stop Plate Kit - RH (Includes 1 ea. #18, #20)		20177300001	$15.50
		Outside Lever Return Spring - Stop Plate Kit - LH (Includes 1 ea. #18, #20)		20177400001	$15.50
19	1	Clutch Balance Spring - Clutch Spring Kit (L1000/8100) (Includes 1 ea. #12, #19)		20176800001	$11.00
20	1	Stop Plate Assembly - Stop Plate Kit - RH (Includes 1 ea. #18, #20)		20177300001	$15.50
		Stop Plate Assembly - Stop Plate Kit - LH (Includes 1 ea. #18, #20)		20177400001	$15.50
21	1	Clutch Cover Assembly - RH		20178000001	$12.00
		Clutch Cover Assembly - LH		20178100001	$12.00
22	1	Inside Lever Assembly (Includes 1 ea. #14, #15, #16, #22) - RH	Satin Chrome	20178526D01	$137.50
		Inside Lever Assembly (Includes 1 ea. #14, #15, #16, #22) - RH	Bright Chrome	20178502601	$137.50
		Inside Lever Assembly (Includes 1 ea. #14, #15, #16, #22) - RH	Bright Brass	2017850301	$137.50
		Inside Lever Assembly (Includes 1 ea. #14, #15, #16, #22) - RH	Antique Brass	2017850501	$137.50
		Inside Lever Assembly (Includes 1 ea. #14, #15, #16, #22) - LH	Satin Chrome	20178626D01	$137.50
		Inside Lever Assembly (Includes 1 ea. #14, #15, #16, #22) - LH	Bright Chrome	20178602601	$137.50
		Inside Lever Assembly (Includes 1 ea. #14, #15, #16, #22) - LH	Bright Brass	2017860301	$137.50
		Inside Lever Assembly (Includes 1 ea. #14, #15, #16, #22) - LH	Antique Brass	2017860501	$137.50
23	1	Best Outside Lever Assembly (Also fits Falcon / Arrow / Eagle & KSP / Lloyd Matheson) (Removable Core)	Satin Chrome	20179026D01	$167.00
		Best Outside Lever Assembly (Also fits Falcon / Arrow / Eagle & KSP / Lloyd Matheson) (Removable Core)	Bright Chrome	20179002601	$167.00
		Best Outside Lever Assembly (Also fits Falcon / Arrow / Eagle & KSP / Lloyd Matheson) (Removable Core) - RH	Bright Brass	2017900301	$167.00
		Best Outside Lever Assembly (Also fits Falcon / Arrow / Eagle & KSP / Lloyd Matheson) (Removable Core) - RH	Antique Brass	2017900501	$167.00
		Best Outside Lever Assembly (Also fits Falcon / Arrow / Eagle & KSP / Lloyd Matheson) (Removable Core) - LH	Satin Chrome	20179126D01	$167.00
		Best Outside Lever Assembly (Also fits Falcon / Arrow / Eagle & KSP / Lloyd Matheson) (Removable Core) - LH	Bright Chrome	20179102601	$167.00
		Best Outside Lever Assembly (Also fits Falcon / Arrow / Eagle & KSP / Lloyd Matheson) (Removable Core) - LH	Bright Brass	2017910301	$167.00
		Best Outside Lever Assembly (Also fits Falcon / Arrow / Eagle & KSP / Lloyd Matheson) (Removable Core) - LH	Antique Brass	2017910501	$167.00
24	1	Best Outside Drive Sleeve Assembly (Also fits Falcon / Arrow / Eagle & KSP / Lloyd Matheson) (Removable Core)		20179200001	$36.50
25	1	Chamber Release Cam - Passage Kit (Passage, Lockout) (Includes 1 ea. #8, #25, #26)		20182500001	$22.00
26	1	Chamber Release - Passage Kit (For Passage Set) (Includes 1 ea. #8, #25, #26)		20182500001	$22.00
27	1	Schlage Outside Lever Assembly (Removable Core) - RH	Satin Chrome	20182926D01	$167.00
		Schlage Outside Lever Assembly (Removable Core) - RH	Bright Chrome	20182902601	$167.00
		Schlage Outside Lever Assembly (Removable Core) - RH	Bright Brass	2018290301	$167.00
		Schlage Outside Lever Assembly (Removable Core) - RH	Antique Brass	2018290501	$167.00
		Schlage Outside Lever Assembly (Removable Core) - LH	Satin Chrome	20183026D01	$167.00

***Effective August 2013 the L1000 service kits will no longer ship with the inside lever fixed sleeve included in each service kit.**
**** For use with levers with brass cup insert in lever.**

Simplex 8100 Series *(continued)*

Item	Qty/Lock	Description	Finish	Part Number	List Price
27	1	Schlage Outside Lever Assembly (Removable Core) - LH	Bright Chrome	20183002601	$167.00
		Schlage Outside Lever Assembly (Removable Core) - LH	Bright Brass	2018300301	$167.00
		Schlage Outside Lever Assembly (Removable Core) - LH	Antique Brass	2018300501	$167.00
28	1	Medeco / ASSA / Yale Outside Drive Sleeve Assembly (Removable Core) (Old # for ASSA 204010)		20184200001	$46.00
29	1	Sargent Outside Lever Assembly (Removable Core) - RH	Satin Chrome	20192526D01	$167.00
		Sargent Outside Lever Assembly (Removable Core) - RH	Bright Chrome	20192502601	$167.00
		Sargent Outside Lever Assembly (Removable Core) - RH	Bright Brass	2019250301	$167.00
		Sargent Outside Lever Assembly (Removable Core) - RH	Antique Brass	2019250501	$167.00
		Sargent Outside Lever Assembly (Removable Core) - LH	Satin Chrome	20192626D01	$167.00
29	1	Sargent Outside Lever Assembly (Removable Core) - LH	Bright Chrome	20192602601	$167.00
		Sargent Outside Lever Assembly (Removable Core) - LH	Bright Brass	2019260301	$167.00
		Sargent Outside Lever Assembly (Removable Core) - LH	Antique Brass	2019260501	$167.00
30	1	Medeco / ASSA / Yale Outside Lever Assembly (Removable Core) (Old # for ASSA 204008 LH, 204009 RH) - RH	Satin Chrome	20192726D01	$167.00
		Medeco / ASSA / Yale Outside Lever Assembly (Removable Core) (Old # for ASSA 204008 LH, 204009 RH) - RH	Bright Chrome	20192702601	$167.00
		Medeco / ASSA / Yale Outside Lever Assembly (Removable Core) (Old # for ASSA 204008 LH, 204009 RH) - RH	Bright Brass	2019270301	$167.00
		Medeco / ASSA / Yale Outside Lever Assembly (Removable Core) (Old # for ASSA 204008 LH, 204009 RH) - RH	Antique Brass	2019270501	$167.00
		Medeco / ASSA / Yale Outside Lever Assembly (Removable Core) (Old # for ASSA 204008 LH, 204009 RH) - LH	Satin Chrome	20192826D01	$167.00
		Medeco / ASSA / Yale Outside Lever Assembly (Removable Core) (Old # for ASSA 204008 LH, 204009 RH) - LH	Bright Chrome	20192802601	$167.00
		Medeco / ASSA / Yale Outside Lever Assembly (Removable Core) (Old # for ASSA 204008 LH, 204009 RH) - LH	Bright Brass	2019280301	$167.00
		Medeco / ASSA / Yale Outside Lever Assembly (Removable Core) (Old # for ASSA 204008 LH, 204009 RH) - LH	Antique Brass	2019280501	$167.00
31	1	Corbin / Russwin Outside Lever Assembly (Removable Core) - RH	Satin Chrome	20192926D01	$167.00
		Corbin / Russwin Outside Lever Assembly (Removable Core) - RH	Bright Chrome	20192902601	$167.00
		Corbin / Russwin Outside Lever Assembly (Removable Core) - RH	Bright Brass	2019290301	$167.00
		Corbin / Russwin Outside Lever Assembly (Removable Core) - RH	Antique Brass	2019290501	$167.00
		Corbin / Russwin Outside Lever Assembly (Removable Core) - LH	Satin Chrome	20193026D01	$167.00
		Corbin / Russwin Outside Lever Assembly (Removable Core) - LH	Bright Chrome	20193002601	$167.00
		Corbin / Russwin Outside Lever Assembly (Removable Core) - LH	Bright Brass	2019300301	$167.00
		Corbin / Russwin Outside Lever Assembly (Removable Core) - LH	Antique Brass	2019300501	$167.00
32	6	Sems Screw, Phillips 6-32 x 7/16" (11 mm) R.H.M.S. (Includes 10 ea. #32, #33, #34) (clutch cover, clutch backing plate and guide bracket) Screw Pack (10 ea. 6-32 x 3/8", 5/16", 7/16")		6477600001	$11.00
33	2	Sems Screw, Phillips 6-32 x 5/16" (8 mm) R.H.M.S. (Includes 10 ea. #32, #33, #34) (chamber) Screw Pack (10 ea. 6-32 x 3/8", 5/16", 7/16")		6477600001	$11.00
34	6	Screw, Phillips 6-32 x 3/8" F.H.M.S. (back plate) (Includes 10 ea. #32, #33, #34) Screw Pack (10 ea. 6-32 x 3/8", 5/16", 7/16")		6477600001	$11.00
35	1	Front Lock Housing	Satin Chrome	20300026D01	$95.50
		Front Lock Housing	Bright Chrome	20300002601	$95.50
		Front Lock Housing	Bright Brass	2030000301	$95.50
		Front Lock Housing	Antique Brass	2030000501	$95.50
36	1	Torx Anti-Tamper Wrench - Code Change Tool/Screw Kit (Includes Wrench, Code Change Tool, Screw)	Satin Chrome	7454326D01	$13.00
		Torx Anti-Tamper Wrench - Code Change Tool/Screw Kit (Includes Wrench, Code Change Tool, Screw)	Bright Brass	745430301	$13.00
		Torx Anti-Tamper Wrench - Code Change Tool/Screw Kit (Includes Wrench, Code Change Tool, Screw)	Antique Brass	745430501	$13.00

Simplex 8100 Series *(continued)*

Item	Qty/Lock	Description	Finish	Part Number	List Price
38	1	Corbin / Russwin Outside Drive Sleeve Assembly (Removable Core)		20403600001	$46.00
39	1	Sargent Outside Drive Sleeve Assembly (Removable Core)		20403700001	$46.00
40	1	Schlage Outside Drive Sleeve Assembly (Removable Core)		20403800001	$46.00
41	1	Inside Lever Retainer Clip (5 Pack)		20412000005	$11.00
42	1	Unified Trim Plate for Deadbolt	Satin Chrome	80121826D01	$36.50
		Unified Trim Plate for Deadbolt	Bright Chrome	80121802601	$36.50
		Unified Trim Plate for Deadbolt	Bright Brass	8012180301	$36.50
		Unified Trim Plate for Deadbolt	Antique Brass	8012180501	$36.50
43	1	Thread Ring	Satin Chrome	80122726D01	$12.00
		Thread Ring	Bright Brass	8012270301	$12.00
		Thread Ring	Antique Brass	8012270501	$12.00
44	1	Gear Detention Spring (Not shown in exploded view)		80123100001	$10.00
45	1	Drive Shaft Assembly Bracket Screw (Includes 1 ea. #45, #51)		80124700001	$11.00
46	1	Drive Shaft Assembly ALL models EXCEPT Schlage		80123900001	$32.00
		Schlage Drive Shaft Assembly		80129300001	$32.00
47	1	Inside Drive Sleeve - RH		80124000001	$33.00
		Inside Drive Sleeve - LH		80125700001	$33.00
48	1	Thumb Turn Assembly (Passage & Lockout)	Satin Chrome	80127926D01	$48.50
		Thumb Turn Assembly (Passage & Lockout)	Bright Brass	8012790301	$48.50
		Thumb Turn Assembly (Passage & Lockout)	Antique Brass	8012790501	$48.50
49	1	Thumb Turn Assembly (Deadbolt)	Satin Chrome	80124326D01	$34.00
		Thumb Turn Assembly (Deadbolt)	Bright Brass	8012430301	$34.00
		Thumb Turn Assembly (Deadbolt)	Antique Brass	8012430501	$34.00
50	1	Reinforcing Plate		80124500001	$12.00
51	1	Drive Shaft Assembly Bracket (Includes 1 ea. #45, #51)		80124700001	$11.00
52	1	Inside Lever Sleeve Base - RH	Satin Chrome	80124826D01	$39.50
		Inside Lever Sleeve Base - RH	Bright Brass	8012480301	$39.50
		Inside Lever Sleeve Base - RH	Antique Brass	8012480501	$39.50
		Inside Lever Sleeve Base - LH	Satin Chrome	80124926D01	$39.50
		Inside Lever Sleeve Base - LH	Bright Brass	8012490301	$39.50
		Inside Lever Sleeve Base - LH	Antique Brass	8012490501	$39.50
53	1	Clutch Assembly (Includes 1 ea. #12, #19, #53) - RH		80125200001	$55.00
		Clutch Assembly (Includes 1 ea. #12, #19, #53) - LH		80125300001	$55.00
54	1	Passage Plug Assembly - with (2) DF5 Keys (Passage & Lockout)	Satin Chrome	80127926D01	$48.50
		Passage Plug Assembly - with (2) DF5 Keys (Passage & Lockout)	Bright Brass	8012790301	$48.50
		Passage Plug Assembly - with (2) DF5 Keys (Passage & Lockout)	Antique Brass	8012790501	$48.50
55	1	Back Plate Assembly - RH		80126000001	$76.00
		Back Plate Assembly - LH		80127200001	$76.00
56	1	Mortise Assembly with Deadbolt (Includes 1 ea. #56 #57) - RH (old # 80126126D41)	Satin Chrome	80127426D01	$165.00
		Mortise Assembly with Deadbolt (Includes 1 ea. #56 #57) - RH (old # 8012610341)	Bright Brass	8012740301	$165.00
		Mortise Assembly with Deadbolt (Includes 1 ea. #56 #57) - LH (old # 80127526D41)	Satin Chrome	80127326D01	$165.00
		Mortise Assembly with Deadbolt (Includes 1 ea. #56 #57) - LH (old # 8012750341))	Bright Brass	8012730301	$165.00
57	1	Strike Plate (Includes screws) - RH	Satin Chrome	80126226D01	$18.50
		Strike Plate (Includes screws) - RH	Bright Brass	8012620301	$18.50
		Strike Plate (Includes screws) - RH	Antique Brass	8012620501	$18.50
		Strike Plate (Includes screws) - LH	Satin Chrome	80127626D01	$18.50
		Strike Plate (Includes screws) - LH	Bright Brass	8012760301	$18.50
		Strike Plate (Includes screws) - LH	Antique Brass	8012760501	$18.50

Simplex 8100 Series *(continued)*

Item	Qty/Lock	Description	Finish	Part Number	List Price
58	1	Inside Lever Sleeve Assembly - RH (Includes 1 ea. #41, # 47, #52)	Satin Chrome	80126526D01	$57.00
		Inside Lever Sleeve Assembly - RH (Includes 1 ea. #41, # 47, #52)	Bright Chrome	80126502601	$57.00
		Inside Lever Sleeve Assembly - RH (Includes 1 ea. #41, # 47, #52)	Bright Brass	8012650301	$57.00
		Inside Lever Sleeve Assembly - RH (Includes 1 ea. #41, # 47, #52)	Antique Brass	8012650501	$57.00
		Inside Lever Sleeve Assembly - LH (Includes 1 ea. #41, # 47, #52)	Satin Chrome	80126626D01	$57.00
		Inside Lever Sleeve Assembly - LH (Includes 1 ea. #41, # 47, #52)	Bright Chrome	80126602601	$57.00
		Inside Lever Sleeve Assembly - LH (Includes 1 ea. #41, # 47, #52)	Bright Brass	8012660301	$57.00
		Inside Lever Sleeve Assembly - LH (Includes 1 ea. #41, # 47, #52)	Antique Brass	8012660501	$57.00
59	1	Unified Trim Plate - without Deadbolt	Satin Chrome	80127826D01	$36.50
		Unified Trim Plate - without Deadbolt	Bright Chrome	80127802601	$36.50
		Unified Trim Plate - without Deadbolt	Bright Brass	8012780301	$36.50
		Unified Trim Plate - without Deadbolt	Antique Brass	8012780501	$36.50
60	1	Mortise Assembly - without Deadbolt - RH	Satin Chrome	80128726D01	$156.00
		Mortise Assembly - without Deadbolt - RH	Bright Brass	8012870301	$156.00
		Mortise Assembly - without Deadbolt - LH	Satin Chrome	80128826D01	$156.00
		Mortise Assembly - without Deadbolt - LH	Bright Brass	8012880301	$156.00
61	2	Mounting Screw Kit (Includes 4 ea. #61; 2 pins)		6477726D01	$20.00
62	1	Installation Hardware Kit (Not shown in exploded view)	Satin Chrome	80125926D01	$39.50
		Installation Hardware Kit (Not shown in exploded view)	Bright Brass	8012590301	$39.50
		Installation Hardware Kit (Not shown in exploded view)	Antique Brass	8012590501	$39.50

Additional Kits and Accessories

		Lubriplate Aero Grease Tubes		6475400001	$14.50
		Best Key Override Spacer (not shown)		3800-00-3007	$24.00
		Sargent Key Override Spacer (not shown)		20402900001	$24.00
		Corbin-Russwin Key Override Spacer (not shown)		20402800001	$24.00

Simplex
LP1000 Series

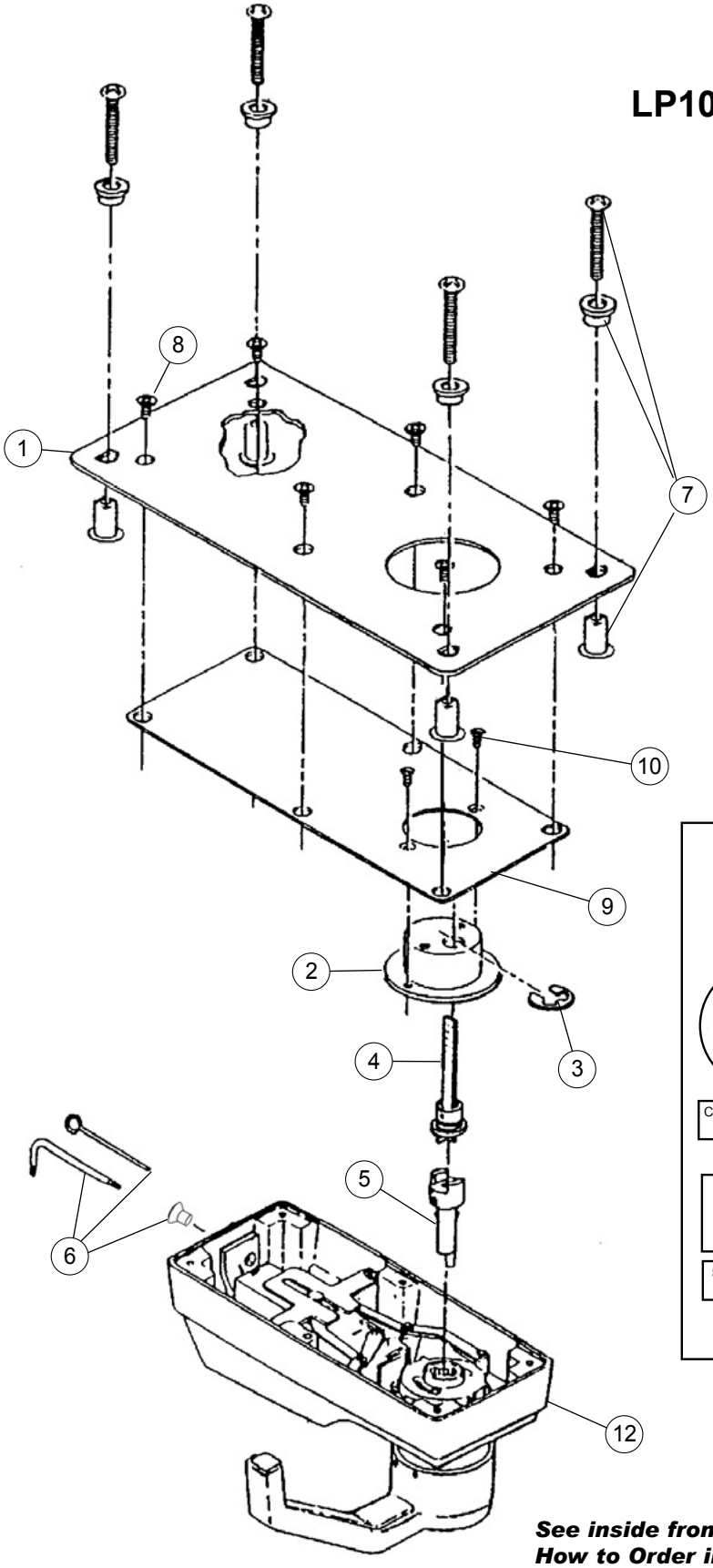

LP1000 Series Service Kit

Left Hand: 20304000001 $165.00 each
Right Hand: 203039000 $165.00 each

Clutch Assembly

Drive Shaft
K/O "BEST ONLY"

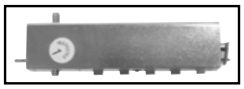

Combination Chamber

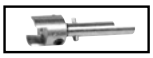

Drive Shaft All Others

Tail Piece Assembly w/ clip

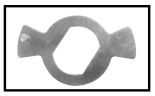

Stop Plate

Chamber Shaft Bushing

Lever Return Sping

Left Hand Kit Shown

See inside front cover for How to Order instructions

Note: For lock assembly, see L1000 section.

Simplex LP1000 Series *(continued)*

Item	Qty/Lock	Description	Finish	Part Number	List Price
1	1	Mounting Plate	Black	24355008301	$26.50
2	1	Lock Adapter		4424700001	$21.00
3	1	E - Ring (For Tailpiece Assembly) (10 Pack)		5419800010	$11.00
4	1	Tail Piece Assembly (Includes 1 ea. #3, #4)		7430300001	$14.50
5	1	Drive Shaft Assembly (Short) (For All Key Override Cores Except Best and Equivalents)		7452900001	$23.00
		Drive Shaft Assembly (Long) (For Best Key Override and Equivalents)		7467900001	$23.00
6	1	Torx Anti-Tamper Wrench - Code Change Tool/Screw Kit (Includes Wrench, Code Change Tool, Screw)	Satin Chrome	7454326D01	$13.00
		Torx Anti-Tamper Wrench - Code Change Tool/Screw Kit (Includes Wrench, Code Change Tool, Screw)	Bright Brass	745430301	$13.00
		Torx Anti-Tamper Wrench - Code Change Tool/Screw Kit (Includes Wrench, Code Change Tool, Screw)	Antique Brass	745430501	$13.00
7	4	Thru-Bolt Screw Kit (Includes 4 ea. screws, black bushing, black sex nut)	Satin Chrome	7454426D01	$16.50
		Thru-Bolt Screw Kit (Includes 4 ea. screws black bushing, black sex nut)	Bright Brass	745440301	$16.50
8	6	Screw, Phillips 6-32 x 5/8"" F.H.M.S. (Back Plate) (Replaced 201444-022-10) (201955-000-01) (10 Pack)		20416600010	$9.00
9	1	Back Plate (Replaced 24354-000-01)		20404300001	$18.50
10	1	Lock Adapter Screw (5 Pack)		20411200005	$10.00
11	1	Installation Hardware Kit (Includes 1 ea. #6, #7, #8)		7455426D01	$24.00
		Installation Hardware Kit (Includes 1 ea. #6, #7, #8)		745540301	$24.00
12	1	Front Lock Housing (Housing ONLY)	Satin Chrome	20300026D01	$95.50
		Front Lock Housing (Housing ONLY)	Bright Chrome	20300002601	$95.50
		Front Lock Housing (Housing ONLY)	Bright Brass	2030000301	$95.50
		Front Lock Housing (Housing ONLY)	Antique Brass	2030000501	$95.50

Additional Kits and Accessories

		5" Tailpiece (for thicker / cooler doors)		7477300001	$13.00
		Lubriplate Aero Grease Tubes		6475400001	$14.50
		Best Key Override Spacer (not shown)		3800-00-3007	$24.00
		Sargent Key Override Spacer (not shown)		20402800001	$24.00
		Corbin-Russwin Key Override Spacer (not shown)		20402900001	$24.00

Note: Lubriplate Aero grease is the “only" lubricant that should be used.

Parts availability may be limited on older component parts no longer used in production units.

Simplex 2015 Series

See inside front cover for How to Order instructions

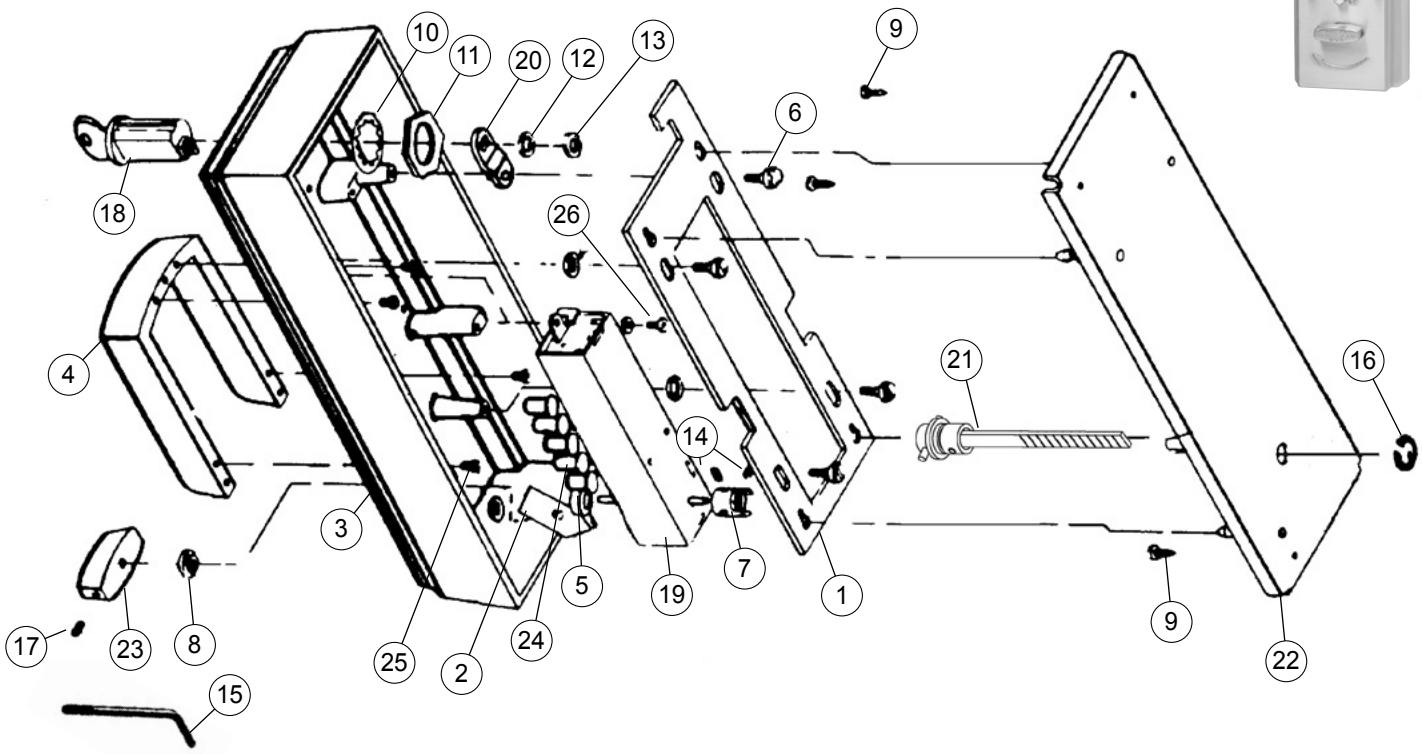

Item	Qty/Lock	Description	Finish	Part Number	List Price
1	1	Lock-in Plate		2410900001	$31.00
2	1	Stop Arm (Includes #2, #5, #7, #14, #19)		74241200001	$97.00
3	1	Front Housing	Satin Chrome	3404426D01	$110.00
4	1	1/2" VisiGuard	Satin Chrome	3404626D01	$15.50
5	1	Control Shaft Sleeve (Includes #2, #5, #7, #14, #19)		74241200001	$97.00
6	4	Lock-In Slide Shoulder Screws (For Drive Hub) (10 Pack)		4412100010	$14.50
7	1	Drive Hub (Includes 1 ea. #7, 3 pcs of #14)		4412200001	$14.50
8	1	Control Shaft Bushing (Includes 1 ea. of #8, #17, #23)		20001326D01	$11.00
9	4	No. 7 PanHead Sheet Metal Screws (For Rear Cover) (10 Pack)		5407700010	$10.00
10	1	Control Lock Cylinder Lock Washer (Includes #10, #11, #12, #13)		6476600001	$11.00
11	1	Control Lock Cyl. Nut (Includes #10, #11, #12, #13)		6476600001	$11.00
12	1	Plug Lock Washer (Includes #10, #11, #12, #13)		6476600001	$11.00
13	1	Plug Nut (Includes #10, #11, #12, #13)		6476600001	$11.00
14	3	8-32 x 3/16" (5 mm) Self-Locking Hex Socket Set Screw Kit (Includes 1 ea. #7, 3 pcs #14)		4412200001	$14.50
15	1	Allen Wrench 5/64" x 1 31/32 (2 x 50 mm)		6471700001	$11.00
16	1	E-Ring (For Tailpiece Assembly) (10 Pack)		5419800010	$11.00

Simplex 2015 Series *(continued)*

Item	Qty/Lock	Description	Finish	Part Number	List Price
17	1	Set Screw 6-32 x 1/4" (6 mm) (Includes 1 ea. #8, #17, #23) (10 Pack)		20001326D01	$11.00
18	1	Control Lock (Includes #10, #11, #12, #13, #18, #20)	Satin Chrome	7416626D01	$60.50
19	1	Combinatino Chamber (Includes 1 ea. #2, #5, #7, #14, #19)		74241200001	$97.00
20	1	Control Lock Cam & Stud Assembly		7430200001	$10.00
21	1	Tailpiece Assy (Includes 1 ea. #16, #21)		7430300001	$14.50
22	1	Back Plate Assembly		7430400001	$29.50
23	1	Turn Knob Kit (Includes 1 ea. #8, #17, #23)	Satin Chrome	20001326D01	$11.00
24	5	Pushbuttons (10 Pack)	Satin Chrome	20002410910	$12.00
25	6	Screw 6-32 x 5/16" RHMS (10 mm) (For combination chamber and VisiGuard) (10 Pack) Screw Pack (10 ea. 6-32 x 3/8", 5/16", 7/16")		6477600001	$11.00

Additional Kits and Accessories

		5" Tailpiece (for thicker / cooler doors)		7477300001	$13.00
		Lubriplate grease		6475400001	$14.50

Note: Lubriplate Aero grease is the “only" lubricant that should be used.

Parts availability may be limited on older component parts no longer used in production units.

Simplex
3000 Series

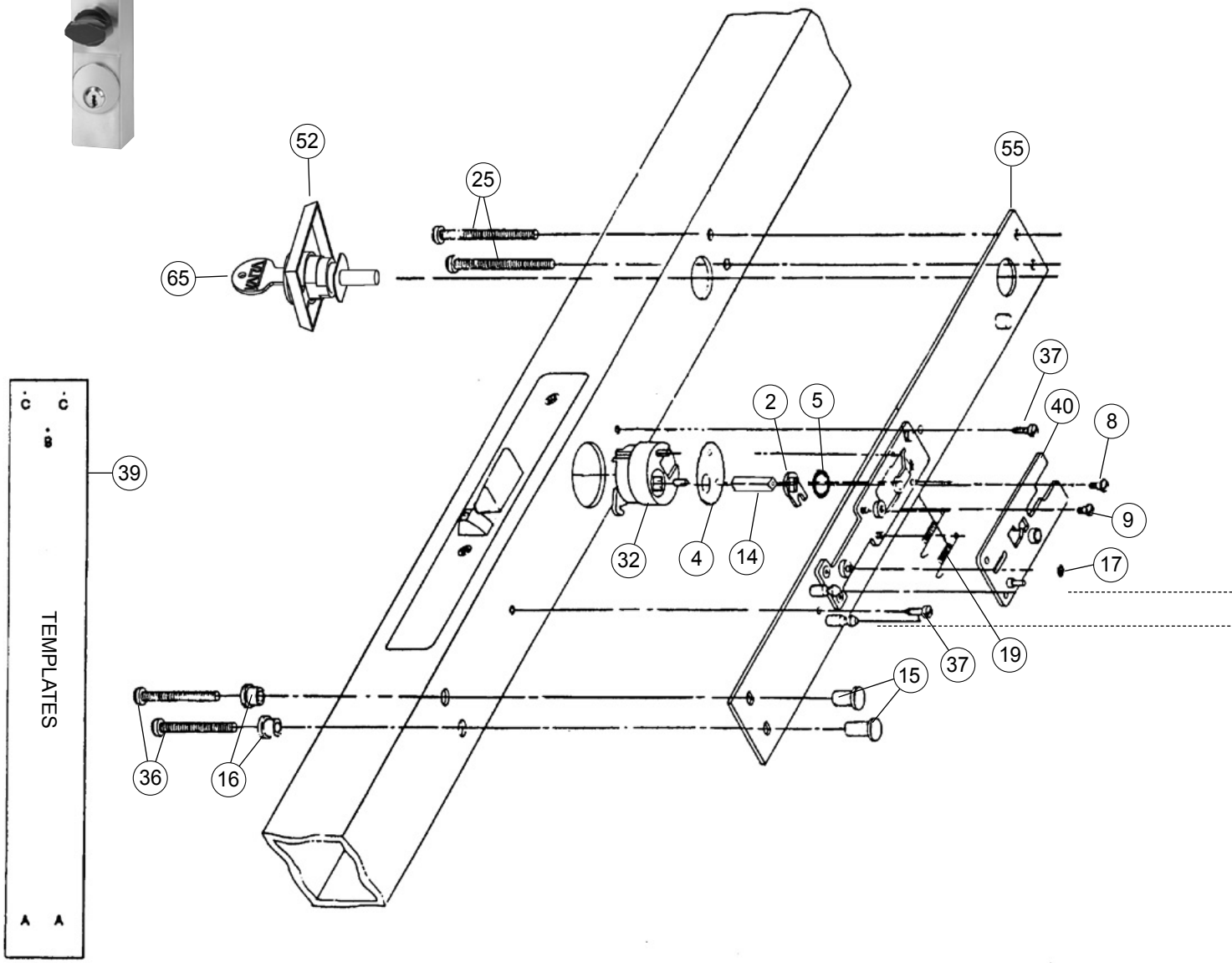

Simplex 3000 Series *(continued)*

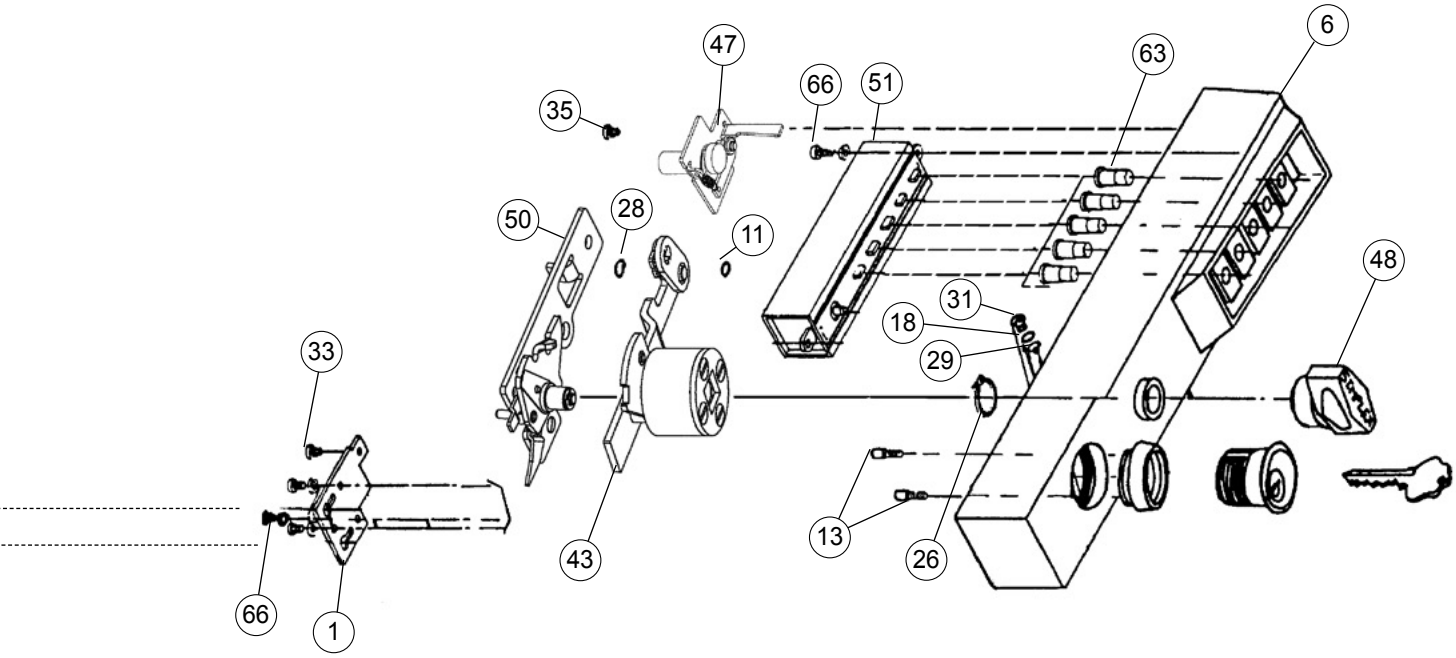

See inside front cover for How to Order instructions

Simplex 3000 Series *(continued)*

Item	Qty/Lock	Description	Finish	Part Number	List Price
1	1	Plate Lock		2416500001	$10.00
2	1	Slide Yoke Cam - Yoke Kit (Includes 1 ea. #2, #5, #14)		6476700001	$20.00
4	1	Cam Cover	Satin Chrome	2419326D01	$9.00
		Cam Cover	Duranodic	241935501	$9.00
5	1	Yoke Spacer - Yoke Kit (Includes 1 ea. #2, #5, #14)		6476700001	$20.00
6	1	Lock Housing without Cylinder Guard	Satin Chrome	3404726D01	$55.00
		Lock Housing without Cylinder Guard	Duranodic	340475501	$55.00
		Lock Housing with Cylinder Guard (Includes 1 ea. #6, #18, #29, #31)	Satin Chrome	7442526D01	$79.00
		Lock Housing with Cylinder Guard (Includes 1 ea. #6, #18, #29, #31)	Duranodic	744255501	$79.00
8	1	Special Head Screw No. 5-40 UNC-2A x 3/16" (5mm) long (For cam drive) (10 Pack)		4418800010	$13.00
9	1	Special Head Screw No. 6-32 UNC-2A x 1/8" (3mm) long (For forward slide) (10 Pack)		4419100010	$13.00
11	1	Bushing (For Combination Chamber Control Shaft) (10 Pack)		4420700010	$13.00
13	2	Threaded Self-tapping Screw No. 4-24 SP x 5/16" (8mm) long (For cylinder retention) (10 Pack)		4421400010	$12.00
14	1	Square Shaft Kit 5/8" (16mm) long (For cam drive) (Includes 1 ea. #2, #5, #14)		6476700001	$20.00
15	2	Threaded Bushing; “D" Shaped (For lower drive assembly mounting plate) (10 Pack)	Black	4422601210	$25.50
16	2	Bushing; “O" Shaped (For lower drive assembly mounting) (10 Pack)	Black	442291910	$17.50
17	3	Retaining Ring (For slide, stud code lever, and interposer) (10 Pack)		5411400010	$10.00
18	1	Washer 1/4" (6mm) Shim (For cylinder guard 74425) (Includes 1 ea. #18, #29, #31)		6476800001	$10.00
19	2	Extension Spring (For slide stile plate assembly) (10 Pack)		5423700010	$11.00
25	2	Phillips Head Screw No. 10-24 UNC - 2A x 2 1/8" (54mm) long (For securing upper lock housing) (10 Pack)		5424700010	$11.00
26	1	Retaining Ring (For drive knob) (10 Pack)		5425100010	$11.00
28	1	Grip Ring (For combination chamber control shaft) (10 Pack)		5425300010	$11.00
29	1	Ball Bearing; 3/32" (2mm) dia. (For cylinder guard) (Includes 1 ea. #18, #29, #31)		6476800001	$10.00
31	1	Round Head Screw No. 5-40 UNC-2A x 1/4" (6mm) long (For lock housing prepped for cylinder guard) (Includes 1 ea. #18, #29, #31)		6476800001	$10.00
32	1	Cam Plug No. 4580 Adams Rite		5425800001	$14.50
33	1	Pan Head Screw No. 6-32 UNC-2AA x 3/16" (5mm) long (For cylinder cam stop) (10 Pack)		5426000010	$7.50
35	1	Slotted Flat Head Screw No. 2-56 x 1/4" (6mm) long (For code change assembly plate) (10 Pack)		5426500010	$7.50
36	2	Phillips Head Machine Screw No. 10-24 x 1 1/2" (38mm) long (For lower drive assembly mounting) (10 Pack)	Black	5427506810	$11.00
37	1	Self-tapping Sheet Metal Screw No. 6 (For securing drive assembly) (10 Pack)		5428400010	$7.50
38	1	Screwdriver 2 1/2" (64mm) Blade; Flat Point (For combination code change) (Not shown on exploded view)		5428500001	$10.00
39	1	Template (Cardboard)- 1 1/8" (28mm) L		6414300001	$9.00
		Template (Cardboard)- 1 1/8" (28mm) L		6414400001	$9.00
		Template (Cardboard)- 3 1/32" (25mm) R		6414500001	$9.00
		Template (Cardboard)- 3 1/32" (25mm) L		6414600001	$9.00
40	1	Slide Assembly- 3 1/32" (25mm) L		7433100001	$14.50
		Slide Assembly- 3 1/32" (25mm) R		7433200001	$14.50
		Slide Assembly- 1 1/8" (28mm) L		7433300001	$14.50
		Slide Assembly- 1 1/8" (28mm) R		7433400001	$14.50
43	1	Clutch Assembly (Complete)		6475500001	$49.50
47	1	Code Change Assembly (Complete)		7434800001	$22.00
48	1	Knob Assembly (Includes 1 ea. #26, #48)	Black	743491901	$12.00
50	1	Interposer Drive and Ball Assembly (Complete)		7435400001	$22.00
51	1	Combination Chamber (M-63)/(M-56)		7436600001	$90.00
52	1	Trim Plate Assembly with (2) DF59 Keys (Complete)	Black	743771901	$17.50

Simplex 3000 Series *(continued)*

Item	Qty/Lock	Description	Finish	Part Number	List Price
55	1	Complete Mounting Plate Assembly (For 1 1/8" (28 mm) backset); RH (Complete) (Includes 1 ea. #2, #5, #8, #9, #14, #17, #19, #32, #40, #55) - Old # 744161901	Black	30301941	$68.00
		Complete Mounting Plate Assembly (For 1 1/8" (28 mm) backset); LH (Complete) (Includes 1 ea. #2, #5, #8, #9, #14, #17, #19, #32, #40, #55) - Old # 744181901	Black	30401941	$68.00
		Complete Mounting Plate Assembly (For 31/32" (25 mm) backset); RH (Complete) (Includes 1 ea. #2, #5, #8, #9, #14, #17, #19, #32, #40, #55) - Old # 744201901	Black	30101941	$68.00
		Complete Mounting Plate Assembly (For 31/32" (25 mm) backset); LH (Complete) (Includes 1 ea. #2, #5, #8, #9, #14, #17, #19, #32, #40, #55) - Old # 744221901	Black	30201941	$68.00
63	5	Pushbuttons (10 Pack)	Black	20002410610	$12.00
		Pushbuttons (10 Pack)	Silver	20002410910	$12.00
65	2	DF-59 Keys (For combination change control lock) (Includes spanner wrench not needed for 3000 code change)		20127800001	$10.00
66	2	Sems Screw Kit Phillips 6 - 32 x 5/16" (8mm) R.H.M.S. (For combination chamber) (Old #54199 & #54200) Screw Pack (10 ea. 6-32 x 3/8", 5/16", 7/16")		6477600001	$11.00

		Additional Kits and Accessories			
		Lubriplate Aero Grease Tubes		6475400001	$14.50

Note: Lubriplate Aero grease is the “only" lubricant that should be used.

Parts availability may be limited on older component parts no longer used in production units.

Simplex 6200 Series

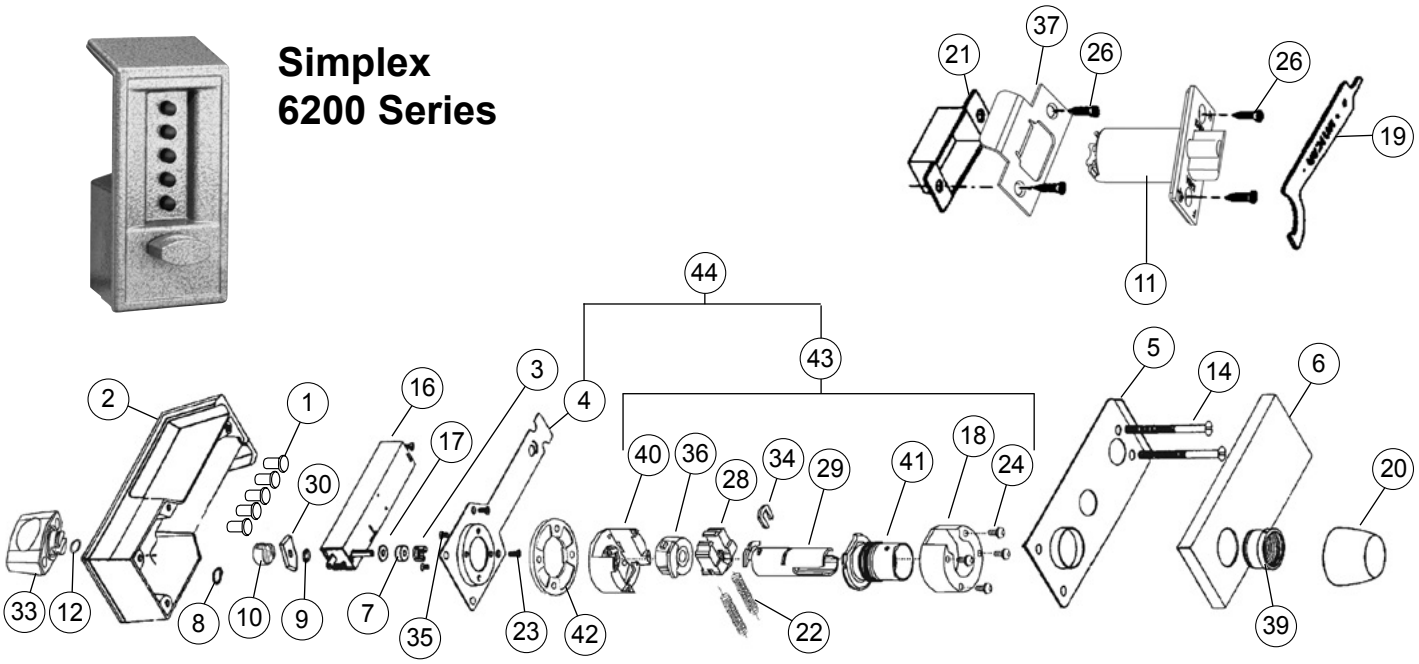

See inside front cover for How to Order instructions

Item	Qty/Lock	Description	Finish	Part Number	List Price
1	5	Pushbuttons (10 Pack)	Black	3401910610	$12.00
2	1	Front Lock Housing	Gold Tone	5500106001	$84.50
		Front Lock Housing	Almond	5500106701	$84.50
		Front Lock Housing	Black	5500108501	$84.50
		Front Lock Housing	Grey	5500108601	$84.50
3	1	Drive Hub - Drive Hub Kit (Includes 1 ea. #3, #17; 2 pcs #7)		6477200001	$11.00
4	1	Back Plate Sub-assembly (Old # 55095)		5504400001	$29.50
5	1	Inside Door Reinforcing Plate		5505700001	$10.00
6	1	Inside Trim Plate	Satin Chrome	5506026D01	$17.50
		Inside Trim Plate	Bright Brass	550600301	$17.50
7	1	Spacer - Drive Hub Kit (Includes 1 ea. #3, #17; 2 pcs #7)		6477200001	$11.00
8	1	Retainer Ring for Turn Knob (10 Pack)		5508000010	$11.00
9	1	Stop Arm Washer - Combination Chamber Kit (Includes 1 ea. #9, #16, #30)		7487000001	$92.50
10	1	Force Proof Clutch Assembly		5509100001	$31.00
11	1	Latch 1/2" (13mm) Throw; 2 3/8" (60mm) Backset; 7/8" Barrel Hole Prep - see 75185xxx	Satin Chrome	5511526D01	N/A
		Latch 1/2" (13mm) Throw; 2 3/8" (60mm) Backset; 7/8" Barrel Hole Prep - see 75185xxx	Bright Brass	551150301	N/A
		Latch 1/2" (13mm) Throw; 2 3/4" (70mm) Backset; 7/8" Barrel Hole Prep - see 204168xxx	Satin Chrome	5511626D01	N/A
		Latch 1/2" (13mm) Throw; 2 3/4" (70mm) Backset; 7/8" Barrel Hole Prep - see 204168xxx	Bright Brass	551160301	N/A
		Latch 1/2" (13mm) Throw; 2 3/8" (60mm) Backset; Floating Front; HD, UL Listed; 1" Barrel Hole Prep	Satin Chrome	7518526D01	$38.50
		Latch 1/2" (13mm) Throw; 2 3/8" (60mm) Backset; Floating Front; HD, UL Listed; 1" Barrel Hole Prep	Bright Brass	751850301	$38.50
		Latch 1/2" (13mm) Throw; 2 3/4" (70mm) Backset; Floating Front; HD, UL Listed; 1" Barrel Hole Prep	Satin Chrome	20416826D01	$38.50
		Latch 1/2" (13mm) Throw; 2 3/4" (70mm) Backset; Floating Front; HD, UL Listed; 1" Barrel Hole Prep	Bright Brass	2041680301	$38.50
12	1	Wave Spring Washer (For front knob assembly) (10 Pack)		5424600010	$11.00
14	2	Mounting Screw 1/4" x 20 NC (2 screws x 2 sizes) for Doors 1 3/8" - 2 1/4"	Satin Chrome	5530026D01	$24.00
		Mounting Screw 1/4" x 20 NC (2 screws x 2 sizes) for Doors 1 3/8" - 2 1/4"	Bright Brass	553000301	$24.00
15	1	Accessory Kits (For Lock Installation) (Not shown in Exploded View)	Satin Chrome	5530026D01	$24.00
		Accessory Kits (For Lock Installation) (Not shown in Exploded View)	Bright Brass	553000301	$24.00
16	1	Combination Chamber Kit (M64) (Includes 1 ea. #9, #16, #30) (Old # 55013-000-01)		7487000001	$92.50

Simplex 6200 Series *(continued)*

Item	Qty/Lock	Description	Finish	Part Number	List Price
17	1	Shaft Bushing - Drive Hub Kit (Includes 1 ea. #3, #17; 2 ea. #7)		6477200001	$11.00
18	1	Cover for Shoe Housing		20127700001	$11.00
19	1	Installation Wrench (Spanner Wrench)		20127800001	$10.00
20	1	Inside Knob (Old # 55073) or 201284	Satin Chrome	3426426D01	$60.50
		Inside Knob (Old # 55073) or 201284	Bright Brass	342640301	$60.50
21	1	Strike Box (Old # 55068-000-01)		20128700001	$9.00
22	2	Shoe Spring (10 Pack)		20136600010	$10.00
23	4	Sems Screw Phillips 6-32 x 1/4" (6mm) R.H.M.S. (For shoe housing cover) (10 Pack)		20144600010	$7.50
24	4	Sems Screw Phillips 8-32 x 7/16" (11mm) R.H.M.S. (For spacer)	Satin Chrome	20421026D01	$11.00
		Sems Screw Phillips 8-32 x 7/16" (11mm) R.H.M.S. (For spacer)	Bright Brass	2042100301	$11.00
25	4	Sems Screw Phillips 8-32 x 11/16" (11mm) R.H.M.S. (For spacer)	Satin Chrome	20421026D01	$11.00
		Sems Screw Phillips 8-32 x 11/16" (11mm) R.H.M.S. (For spacer)	Bright Brass	2042100301	$11.00
26	4	Combination Screw; Phillips 8-32 x 3/4" (19mm) (For Latch & Strike) (10 Pack)	Satin Chrome	20156526D10	$11.00
		Combination Screw; Phillips 8-32 x 3/4" (19mm (For Latch & Strike) (10 Pack)	Bright Brass	2015650310	$11.00
		Combination Screw; Phillips 8-32 x 3/4" (19mm) (For Latch & Strike) (10 Pack)	Antique Brass	2015650510	$11.00
27	1	Rubber Bumper (For Door Frame) (Not Shown on Exploded View)		20156800005	$11.00
28	1	Retractor Shoe (old # 201272)		20172300001	$11.00
29	1	Inside Drive Sleeve Assembly (Includes 1 ea. #29, #34)		20178200001	$16.50
30	1	Stop Arm - Combination Chamber Kit (Includes 1 ea. #9, #16, #30)		7487000001	$92.50
31	2	Sems Screw Phillips 6-32 x 5/16" (8mm) R.H.M.S. (For combination chamber) (Old Part # 201447-000-10) Screw Pack (10 ea. 6-32 x 3/8", 5/16", 7/16")		6477600001	$11.00
32	4	Sems Screw Phillips 6-32 x 3/8" (10mm) F.H.M.S. (For back plate) (Old Part # 201444-000-10) Screw Pack (10 ea. 6-32 x 3/8", 5/16", 7/16")		6477600001	$11.00
33	1	Turn Knob Assembly (Old # 55128) (Includes 1 ea. #8, #33)		20201406001	$24.00
		Turn Knob Assembly (Old # 55128) (Includes 1 ea. #8, #33)		20201406701	$24.00
		Turn Knob Assembly (Old # 55128) (Includes 1 ea. #8, #33)		20201408501	$24.00
		Turn Knob Assembly (Old # 55128) (Includes 1 ea. #8, #33)		20201408601	$24.00
34	1	Retainer Clip (For Inside Knob) (Old # 201344)		20412000005	$11.00
35	4	Sems Screw Phillips 8 - 32 x 5/16" (5mm) R.H.M.S. (For spacer) (old # 201449)	Satin Chrome	20421026D01	$11.00
		Sems Screw Phillips 8 - 32 x 5/16" (5mm) R.H.M.S. (For spacer) (old # 201449)	Bright Brass	2042100301	$11.00
36	1	Drive Insert (Old # 55077)		20413800001	$23.00
37	1	Strike Plate (old # 201288)	Satin Chrome	20422726D01	$11.00
		Strike Plate (old # 201288)	Bright Brass	2042270301	$11.00
39	1	Rose Bushing / Thread Ring Privacy Locks	Satin Chrome	20416926D01	$12.00
		Rose Bushing / Thread Ring Privacy Locks	Bright Brass	2041690301	$12.00
40	1	Shoe Retainer and Bridge Assembly		20419900001	$37.50
41	1	Shoe Retainer Cap Assembly	Satin Chrome	20420026D01	$32.00
		Shoe Retainer Cap Assembly	Bright Brass	2042000301	$32.00
42	1	1/4" Spacer, Door Thickness	Satin Chrome	20421026D01	$11.00
		1/4" Spacer, Door Thickness	Bright Brass	2042100301	$11.00
43	1	Cylindrical Drive Unit Assembly (Includes 1 ea. #18, #28, #29, #34, #36, #40, #41; 2 ea. #22; 4 ea. #24)	Satin Chrome	20420626D01	$103.50
		Cylindrical Drive Unit Assembly (Includes 1 ea. #18, #28, #29, #34, #36, #40, #41; 2 ea. #22; 4 ea. #24)	Bright Brass	2042060301	$103.50
44	1	Back Plate Assembly (Includes 1 ea. #4, #24, #42, #43)	Satin Chrome	20420726D01	$114.50
		Back Plate Assembly (Includes 1 ea. #4, #24, #42, #43)	Bright Brass	2042070301	$114.50

Additional Kits and Accessories

		Lubriplate Aero Grease Tubes		6475400001	$14.50
		6200 Filler Plate - Black Only (no longer available)		550721901	N/A

Note: Lubriplate Aero grease is the “only" lubricant that should be used.

Parts availability may be limited on older component parts no longer used in production units.

Simplex 7100 Series

See inside front cover for How to Order instructions

Front Housing, All Models

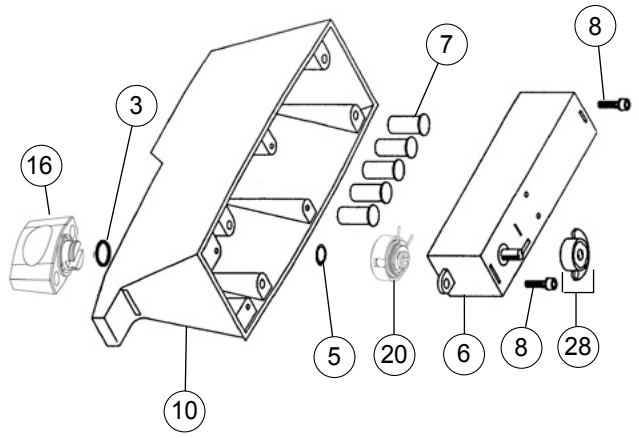

Interior: 7104

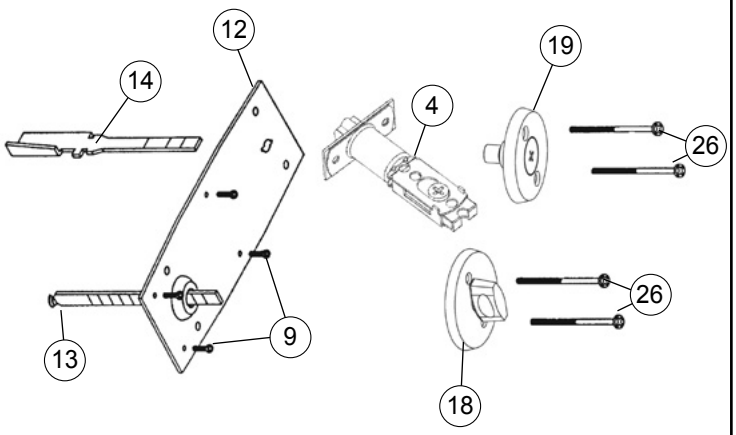

Interior: 7102, 7108

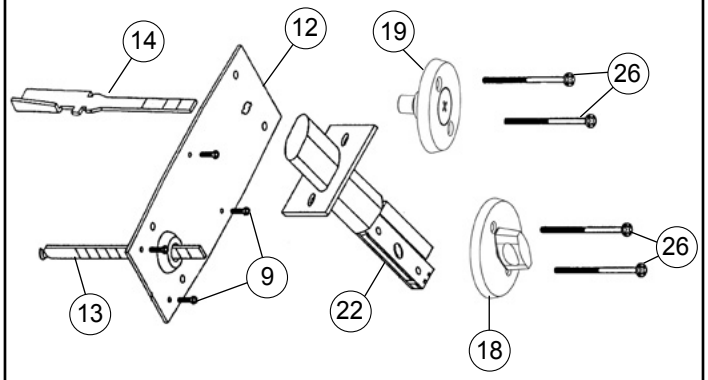

Interior: 7106

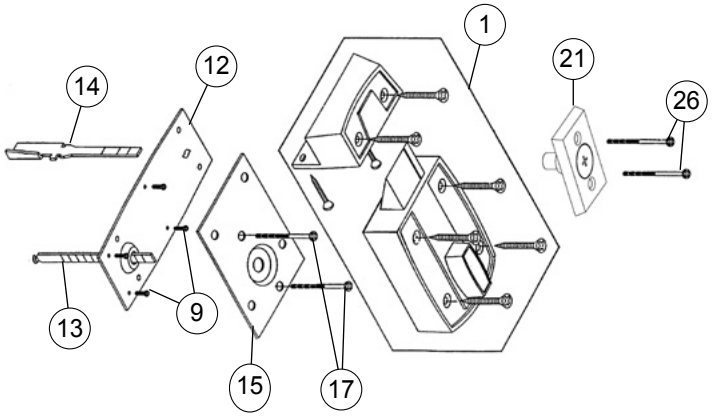

Item	Qty/Lock	Description	Finish	Part Number	List Price
1	1	Rim Deadlocking Latch 2 3/8" (60mm) Backset with Strike Box (7106 only) (Includes 1 ea. #1, #15, #35)		40275091941	$48.50
3	1	Wave Spring Washer (For front knob assembly) (10 Pack)		5424600010	$11.00
4	1	7104 Latch Bolt Assembly Adjustable 2 3/4" (70mm & 2 3/8" (60mm) backset (Includes 1 ea. #4, #28) (Replaced 202003)	Satin Chrome	5444426D01	$34.00
		7104 Latch Bolt Assembly Adjustable 2 3/4" (70mm) & 2 3/8" (60mm) backset (Includes 1 ea. #4, #28) (Replaced 202003)	Bright Brass	544440301	$34.00
5	1	Retainer Ring (10 Pack)		5508000010	$11.00
6	1	Combination Chamber (M-71) Common (For all 7000/7100 Series Locks) (old # 202056)		7466000001	$90.00
7	5	Pushbuttons (10 Pack)	Black	20002410610	$12.00
		Pushbuttons (10 Pack)	Silver	20002410910	$12.00

Simplex 7100 Series *(continued)*

Item	Qty/Lock	Description	Finish	Part Number	List Price
8	2	Screw Thread Forming 6-32 UNC x 5/16" (8mm) Pan Head (For combination chamber) (Includes 10 ea. #8, #9) Screw Pack (10 ea. 6-32 x 3/8", 5/16", 7/16")		6477600001	$11.00
9	4	Screw Thread Forming 6-32 UNC x 3/8" Flat Head (For Back Plate) (Includes 10 ea. #8, #9) Screw Pack (10 ea. 6-32 x 3/8", 5/16", 7/16")		6477600001	$11.00
10	1	Front Lock Housing (old # 202002-***-01)	Bright Brass	2020750301	$88.00
		Front Lock Housing (old # 202002-***-01)	Antique Copper	202075AC01	$88.00
		Front Lock Housing (old # 202002-***-01)	Black	2020751901	$88.00
		Front Lock Housing (old # 202002-***-01)	Antique White	202075AW01	$88.00
		Front Lock Housing (old # 202002-***-01)	Satin Chrome	20207526D01	$88.00
		Front Lock Housing (old # 202002-***-01)	Antique Brass	2020750501	$88.00
		Front Lock Housing (old # 202002-***-01)	Gold Vein	202075GV01	$88.00
		Front Lock Housing (old # 202002-***-01)	Silver Vein	202075SV01	$88.00
12	1	Back Plate Old Style (narrow) (7000 series) (no longer available)		20200400001	N/A
		Back Plate New Style (wide) (7100 series)		20209100001	$11.00
13	1	Tailpiece (For latch / deadbolt) (Includes 1 ea. #13, #14)		6476900001	$11.00
14	1	Tailpiece (For combination change) (Includes 1 ea. #13, #14)		6476900001	$11.00
15	1	7106 Rim Deadlocking Latch Inside Back Plate		20201200001	$10.00
16	1	Outside Turn Knob Assembly (Includes 1 ea. #3, #5, #16)	Bright Brass	2020140301	$24.00
		Outside Turn Knob Assembly (Includes 1 ea. #3, #5, #16)	Satin Chrome	20201426D01	$24.00
		Outside Turn Knob Assembly (Includes 1 ea. #3, #5, #16)	Antique Brass	2020140501	$24.00
		Outside Turn Knob Assembly (Includes 1 ea. #3, #5, #16)	Antique White	202014AW01	$24.00
		Outside Turn Knob Assembly (Includes 1 ea. #3, #5, #16)	Gold Vein	202014GV01	$24.00
		Outside Turn Knob Assembly (Includes 1 ea. #3, #5, #16)	Silver Vein	202014SV01	$24.00
17	2	Connecting Bolt Pan Head Screws (For 7106) (5 Pack)		20202100005	$13.00
18	1	Inside Turn Knob and Rose Assembly For Models 7102/7104/7108	Bright Brass	2020250301	$26.50
		Inside Turn Knob and Rose Assembly For Models 7102/7104/7108	Antique Copper	202025AC01	$26.50
		Inside Turn Knob and Rose Assembly For Models 7102/7104/7108	Satin Chrome	20202526D01	$26.50
		Inside Turn Knob and Rose Assembly For Models 7102/7104/7108	Antique Brass	2020250501	$26.50
		Inside Turn Knob and Rose Assembly For Models 7102/7104/7108	Antique White	202025AW01	$26.50
		Inside Turn Knob and Rose Assembly For Models 7102/7104/7108	Gold Vein	202025GV01	$26.50
		Inside Turn Knob and Rose Assembly For Models 7102/7104/7108	Silver Vein	202025SV01	$26.50
19	1	Inside Combination Change Assembly For Models 7102/7104/7108	Bright Brass	2020260301	$26.50
		Inside Combination Change Assembly For Models 7102/7104/7108	Antique Copper	202026AC01	$26.50
		Inside Combination Change Assembly For Models 7102/7104/7108	Satin Chrome	20202626D01	$26.50
		Inside Combination Change Assembly For Models 7102/7104/7108	Antique Brass	2020260501	$26.50
		Inside Combination Change Assembly For Models 7102/7104/7108	Antique White	202026AW01	$26.50
		Inside Combination Change Assembly For Models 7102/7104/7108	Gold Vein	202026GV01	$26.50
		Inside Combination Change Assembly For Models 7102/7104/7108	Silver Vein	202026SV01	$26.50
20	1	Force Proof Clutch Assembly (Complete)		20208100001	$26.50
21	1	7106 Combination Change Assembly	Black	2020281901	$26.50
22	1	7102 Deadbolt Assembly 2 3/4" (70mm) backset	Satin Chrome	20205226D01	$34.00
		7102 Deadbolt Assembly 2 3/4" (70mm) backset	Bright Brass	2020520301	$34.00
		7108 Deadbolt Assembly 2 3/8" (60mm) backset	Satin Chrome	20206426D01	$34.00
		7108 Deadbolt Assembly 2 3/8" (60mm) backset	Bright Brass	2020640301	$34.00

Simplex 7100 Series *(continued)*

Item	Qty/Lock	Description	Finish	Part Number	List Price
26	4	Connecting Bolts - Flat Head Phillips Screws. (For 1 3/8" to 2 1/4" doors) (Includes 4 ea. #26 - 4 pcs x 3 different lengths)	Satin Chrome	6477426D01	$13.00
		Connecting Bolts - Flat Head Phillips Screws. (For 1 3/8" to 2 1/4" doors) (Includes 4 ea. #26 - 4 pcs x 3 different lengths)	Bright Brass	647740301	$13.00
28	1	Cam Assembly (For 7106 - “C" Up)		20207700001	$10.00
		Cam Assembly (For 7104 - “D" Down)		20208000001	$10.00
		Cam Assembly (For 7102/7108 - “D" Up)		20207900001	$10.00
31	1	7102/7108 Installation Hardware Kit	Bright Brass	SP71020301	$26.50
		7102/7108 Installation Hardware Kit	Satin Chrome	SP710226D01	$26.50
33	1	7104 Installation Hardware Kit	Bright Brass	SP71040301	$26.50
		7104 Installation Hardware Kit	Satin Chrome	SP710426D01	$26.50
35	1	7106 Installation Hardware Kit	Black	SP71061901	$26.50
36	1	7104 Strike Kit	Satin Chrome	20423026D01	$11.00
		7104 Strike Kit	Bright Brass	2042300301	$11.00

Additional Kits and Accessories

		Lubriplate Aero Grease Tubes		6475400001	$14.50

Note: Lubriplate Aero grease is the “only" lubricant that should be used.

Parts availability may be limited on older component parts no longer used in production units.

Simplex 900 Series

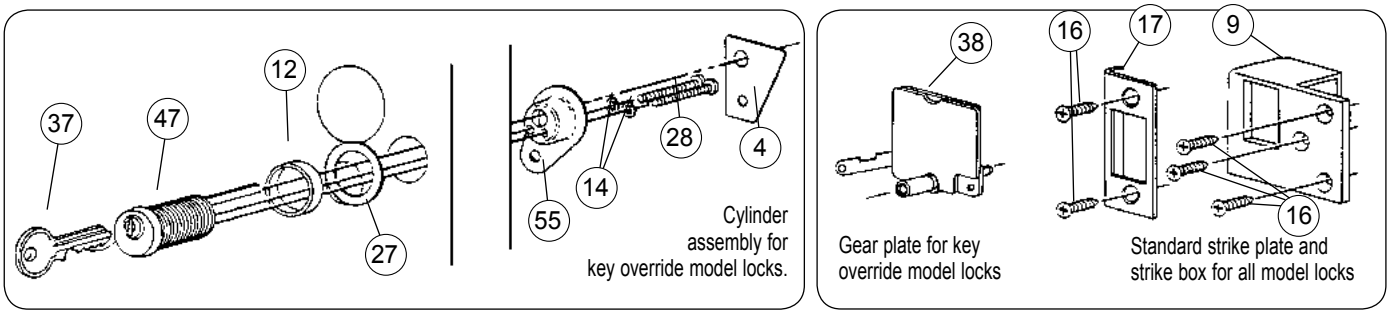

Continued to NL & DL models below

See inside front cover for How to Order instructions

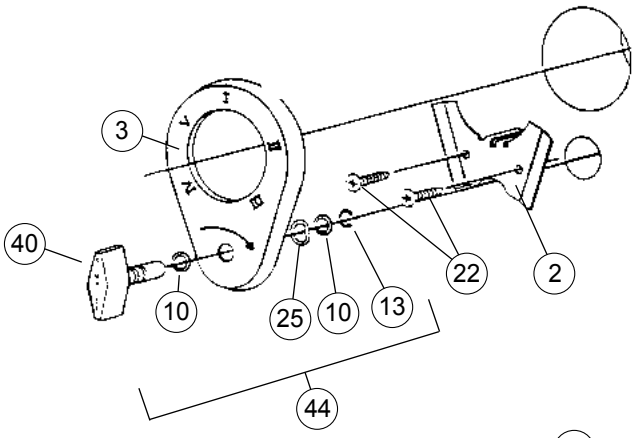

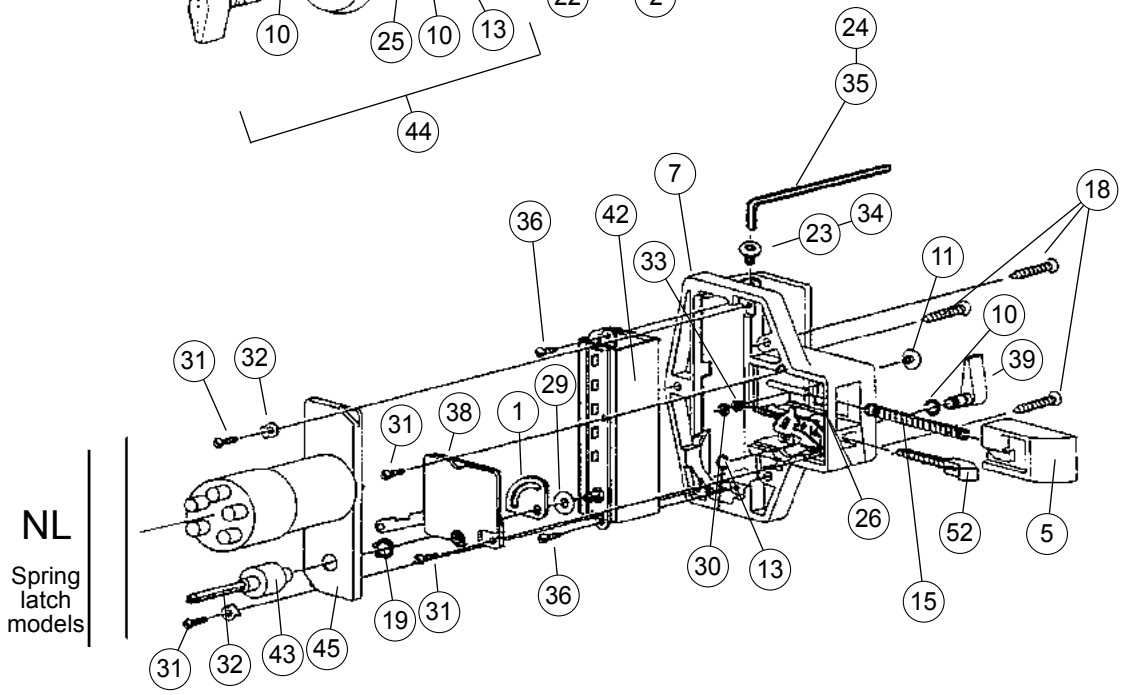

NL

Spring latch models

Simplex 900 Series *(continued)*

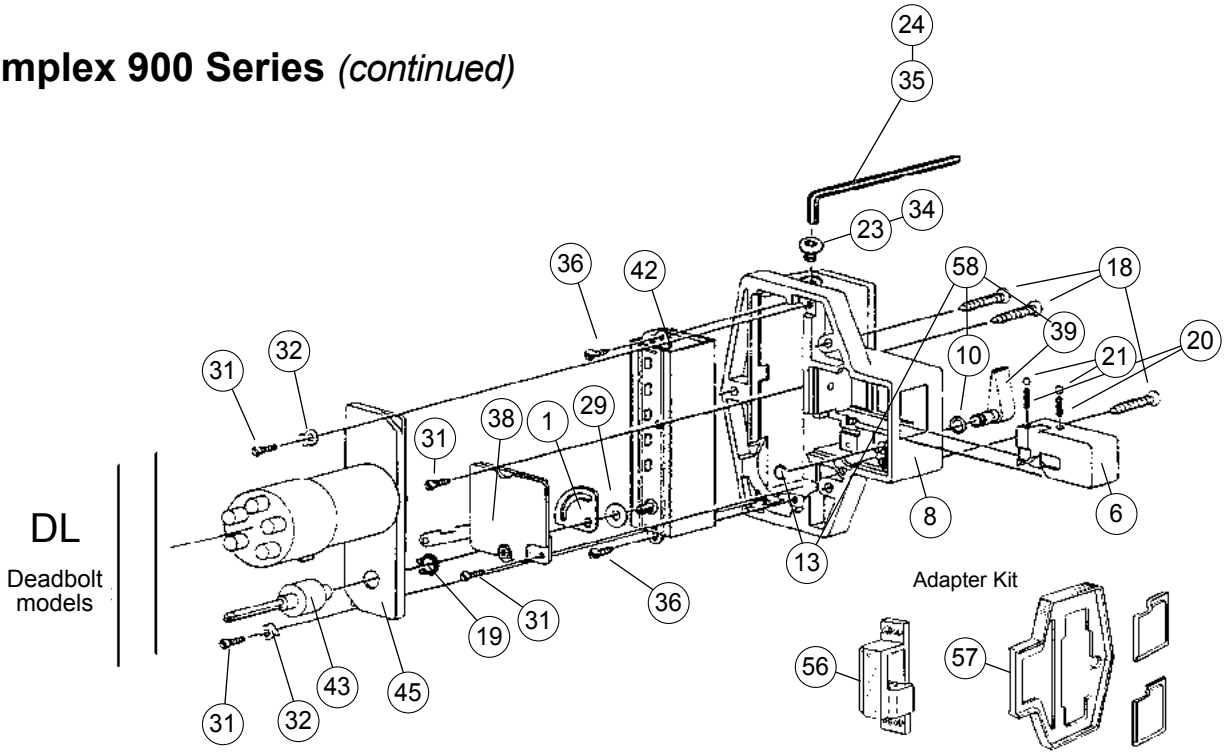

Item	Qty/Lock	Description	Finish	Part Number	List Price
1	1	Sector Cam (For Combination Chamber Control Shaft)		2404600001	$6.50
2	1	Holding Bracket (For attaching face plate to outside of door)		2406300001	$7.50
4	1	Clip Flange Cover	Satin Chrome	2410826D01	$6.50
5	1	Latch Bolt (For Models 9170000, 9190000, 9350000, 9380000, 9290000, NL)	Satin Chrome	3401126D01	$10.00
		Latch Bolt (For Models 9170000, 9190000, 9350000, 9380000, 9290000, NL)	Satin Brass	340110401	$10.00
6	1	Deadbolt (For Models 9020000, 9040000, 9060000, 9100000, DL)	Satin Chrome	3401226D01	$10.00
		Deadbolt (For Models 9020000, 9040000, 9060000, 9100000, DL)	Satin Brass	340120401	$10.00
7	1	Lock Housing (For Models 9170000, 9190000, 9350000 & 9380000, NL)	Satin Chrome	3402126D01	$31.00
		Lock Housing (For Models 9170000, 9190000, 9350000 & 9380000, NL)	Satin Brass	340210401	$31.00
8	1	Lock Housing (For Models 9020000, 9040000, 9060000 & 9100000, DL)	Satin Chrome	3402226D01	$31.00
		Lock Housing (For Models 9020000, 9040000, 9060000 & 9100000, DL)	Satin Brass	340220401	$31.00
9	1	Mortise Strike Box	Satin Chrome	3402326D01	$11.00
		Mortise Strike Box	Satin Brass	340230401	$11.00
10	2	Nylon Washer, Spacer (For Face Plate and Inside Knob) (10 Pack)		3403700010	$7.50
11	1	Latch Holdback Button - (For Latch Holdback Assembly) (Include 1 ea. #11, #26, #30, #33)	Satin Chrome	7446926D01	$9.00
		Latch Holdback Button - (For Latch Holdback Assembly) (Include 1 ea. #11, #26, #30, #33)	Satin Brass	744690401	$9.00
12	1	Spacer Collar (For Models 9060000 & 9350000)	Satin Chrome	4411226D01	$6.50
		Spacer Collar (For Models 9060000 & 9350000)	Satin Brass	441120401	$6.50
13	2	Knob Retainer Ring (For Face Plate and Inside Knob) (5 Pack)		5401100005	$6.50
14	1	Lock washer (For Key Override Assembly) (10 Pack)		5402900010	$6.50
15	1	Latch Return Spring (For Models 9170000, 9190000, 9350000, 9380000, 9290000, NL) (10 Pack)		5405000010	$11.00
16	2	Strike Mounting Screw (#10 x 1") (10 Pack)	Satin Chrome	5405226D10	$9.00
		Strike Mounting Screw (#10 x 1") (10 Pack)	Satin Brass	540520410	$9.00
17	1	Flat Strike	Satin Chrome	5405326D01	$6.50
		Flat Strike	Satin Brass	540530401	$6.50
18	3	Housing Mounting Screw (#10 x 1 1/2") (10 Pack)	Satin Chrome	5406126D10	$9.00
		Housing Mounting Screw (#10 x 1 1/2") (10 Pack)	Satin Brass	540610410	$9.00
19	1	Clutch Retainer Ring (10 Pack)		5407000010	$10.00
20	2	Spring (For Deadbolt Ball Bearings) (10 Pack)		5407400010	$6.50

Simplex 900 Series *(continued)*

Item	Qty/Lock	Description	Finish	Part Number	List Price
21	2	Ball Bearings (For Deadbolt) (10 Pack)		5407500010	$6.50
22	2	Holding Bracket Screw (#7 x 1/2" Sheet Metal) (10 Pack)		5407700010	$6.50
23	1	Allen Head Button Screw (#10 x 32) Kit (Includes 1 ea. #23, #24)	Satin Chrome	5408226D01	$9.00
		Allen Head Button Screw (#10 x 32) Kit (Includes 1 ea. #23, #24)	Satin Brass	540820401	$9.00
24	1	Allen Wrench (1/8") Kit (Includes 1 ea. #23, #24)	Satin Chrome	5408226D01	$9.00
		Allen Wrench (1/8") Kit (Includes 1 ea. #23, #24)	Satin Brass	540820401	$9.00
25	1	Shake-proof Spring Washer (For Face Plate Assembly) (10 Pack)		5408400010	$9.00
26	1	Latch Button Spring (For Latch Holdback Assembly) (Includes 1 ea. #11, #26, #30, #33)	Satin Chrome	7446926D01	$9.00
		Latch Button Spring (For Latch Holdback Assembly) (Includes 1 ea. #11, #26, #30, #33)	Satin Brass	744690401	$9.00
27	1	Flange Washer (For Key Override Cylinder)	Satin Chrome	5409726D01	$6.50
		Flange Washer (For Key Override Cylinder)	Satin Brass	540970401	$6.50
28	2	Screw (For Securing Key Override Cylinder) (10 Pack)		5409900010	$6.50
29	2	Washer, Shim (For Combination Chamber) (10 Pack)		5410900010	$5.50
30	1	Retainer Clip, E-Ring (For Latch Holdback Assembly) (Includes 1 ea. #11, #26, #30, #33)	Satin Chrome	7446926D01	$9.00
		Retainer Clip, E-Ring (For Latch Holdback Assembly) (Includes 1 ea. #11, #26, #30, #33)	Satin Brass	744690401	$9.00
31	2	Screw, Panhead (#4 - 40 x 5/16") (For Securing Gear Plate) (10 Pack)		5463100010	$9.00
32	2	Washer (For Mounting Center Plate) (10 Pack)		5412000010	$5.50
33	1	Washer (For Latch Holdback Assembly) (Includes 1 ea. #11, #26, #30, #33)	Satin Chrome	7446926D01	$9.00
		Washer (For Latch Holdback Assembly) (Includes 1 ea. #11, #26, #30, #33)	Satin Brass	744690401	$9.00
34	1	Tamper Proof Access Screw Kit (Includes 1 ea. #34, #35) (For Combination Change)	Satin Chrome	5413326D01	$11.00
		Tamper Proof Access Screw Kit (Includes 1 ea. #34, #35) (For Combination Change)	Satin Brass	541330401	$11.00
35	1	Tamper Proof Allen Wrench Kit (Includes 1 ea. #34, #35) (For Removing Tamper Access Screw)	Satin Chrome	5413326D01	$11.00
		Tamper Proof Allen Wrench Kit (Includes 1 ea. #34, #35) (For Removing Tamper Access Screw)	Satin Brass	541330401	$11.00
36	2	Screw, #6-32 x 5/16", Pan hd, SEM - Screw Pack (10 ea. 6-32 x 3/8", 5/16", 7/16")		6477600001	$11.00
37	1	Key Blank (For Key Override Cylinder)		54266	$4.50
38	1	Gear Plate Assembly* (For locks without key bypass for Models 9020000, 9040000, DL)		74042200001	$16.50
		Gear Plate Assembly (For locks without key bypass) (For Models 9170000, 9190000, NL)		74071100001	$16.50
		Gear Plate Assembly* for Key Bypass Locks (For 9350000) (NLM 100)		74162100001	$22.00
		Gear Plate Assembly* for Key Bypass Locks (For 9380000) (NLM 200)		74163100001	$22.00
		Gear Plate Assembly* for Key Bypass Locks (For 9060000) (DLM 100)		74164200001	$22.00
		Gear Plate Assembly* for Key Bypass Locks (For 9100000) (DLM 200)		74167200001	$22.00
		Gear Plate Assembly* for Key Bypass Locks with Horizontal Style Tailpiece (Best) (DLBM100)		74164400001	$22.00
		Gear Plate Assembly* for Key Bypass Locks with Horizontal Style Tailpiece (Best) (DLBM200)		74167400001	$22.00
		Gear Plate Assembly* for Key Bypass Locks with Horizontal Style Tailpiece (Best) (NLBM100)		74162200001	$22.00
		Gear Plate Assembly* for Key Bypass Locks with Horizontal Style Tailpiece (Best) (NLBM100)		74163200001	$22.00
42	1	Combination Chamber (M-55) Dimensions: 7/8" x 15/16" x 3 7/8" (22 mm x 24 mm x 98 mm) (Includes 1 ea. #1, #9, #42)		7408000001	$66.00
43	1	Ball Bearing Clutch Assembly (For connecting outside turn knob) (Includes 1 ea. #19, #43)		7410300001	$10.00
44	1	Face Plate with Outside Knob (Includes 1 ea. #3, #13, #25, #40; 2 ea. #10)	Satin Chrome	7411826D01	$14.50
		Face Plate with Outside Knob (Includes 1 ea. #3, #13, #25, #40; 2 ea. #10)	Satin Brass	741180401	$14.50
45	1	Center Plate and Barrel Assembly with Metal Buttons (100 Series) (For 9020000, 9060000, 9170000, 9350000)	Satin Chrome	7412426D01	$26.50
		Center Plate and Barrel Assembly with Metal Buttons (100 Series) (For 9020000, 9060000, 9170000, 9350000)	Satin Brass	741240401	$26.50
		Center Plate and Barrel Assembly with Metal Buttons (200 Series) (For 9040000, 9100000, 9190000, 9380000, 9290000)	Satin Chrome	7412526D01	$26.50
		Center Plate and Barrel Assembly with Metal Buttons (200 Series) (For 9040000, 9100000, 9190000, 9380000, 9290000)	Satin Brass	741250401	$26.50
47	1	Key Override Cylinder (For 1 3/4" - 2 1/8" Thick Door)	Satin Chrome	7416126D01	$60.50
		Key Override Cylinder (For 1 3/4" - 2 1/8" Thick Door)	Satin Brass	741610401	$60.50

Simplex 900 Series *(continued)*

Item	Qty/Lock	Description	Finish	Part Number	List Price
52	1	Trigger Assembly (For NL + NLM Models)	Satin Chrome	7429026D01	$9.00
		Trigger Assembly (For NL + NLM Models)	Satin Brass	742900401	$9.00
53	1	Drill Jig “C" Clamp (For wood doors) (Not Shown on Exploded View)		7430000001	$176.00
54	1	Metal Template (Not Shown on Exploded View)		7430100001	$98.00
55	1	Clip and Flange Assembly	Satin Chrome	7441426D01	$6.50
		Clip and Flange Assembly	Satin Brass	744140401	$6.50
56	1	Surface-mounted Cast Strike (For metal door frames; spacers included) (Not Shown on Exploded View)	Satin Chrome	7446426D01	$13.00
		Surface-mounted Cast Strike (For metal door frames; spacers included) (Not Shown on Exploded View)	Satin Brass	744640401	$13.00
57	1	Riser Plate to Shim Lock Housings 1/4" (6 mm) or 3/8" (10 mm) (Not Shown on Exploded View)	Satin Chrome	7446826D01	$24.00
		Riser Plate to Shim Lock Housings 1/4" (6 mm) or 3/8" (10 mm) (Not Shown on Exploded View)	Satin Brass	744680401	$24.00
58	1	Latch Holdback Assembly Slide Button Activated for NL + NLM Models (Includes 1 ea. #11, #26, #30, #33)	Satin Chrome	7446926D01	$9.00
		Latch Holdback Assembly Slide Button Activated for NL + NLM Models (Includes 1 ea. #11, #26, #30, #33)	Satin Brass	744690401	$9.00
59	1	Outside Knob Assembly – Includes Hardware (Includes 1 ea. #13, #25, #40; 2 ea. #10)	Satin Chrome	7447026D01	$9.00
		Outside Knob Assembly – Includes Hardware (Includes 1 ea. #13, #25, #40; 2 ea. #10)	Satin Brass	744700401	$9.00
60	1	Inside Knob Assembly – Includes Hardware (Includes 1 ea. #10, #13, #39)	Satin Chrome	7447126D01	$10.00
		Inside Knob Assembly – Includes Hardware (Includes 1 ea. #10, #13, #39)	Satin Brass	744710401	$10.00

Additional Kits and Accessories

		Master Keys - For Key Override Models (Old part# 54266-1)		54266111	$14.50
		Cut Keys - Service Keys for Key Override Models (Old part# 54266-2)		54266211	$8.00
		Blank Keys		54266	$4.50
		Key Override Tailpiece (5 Pack)		2408600005	$16.50
		Lubriplate Aero Grease Tubes		6475400001	$14.50

9600 Series Exploded View

962 Wood/Deadbolt

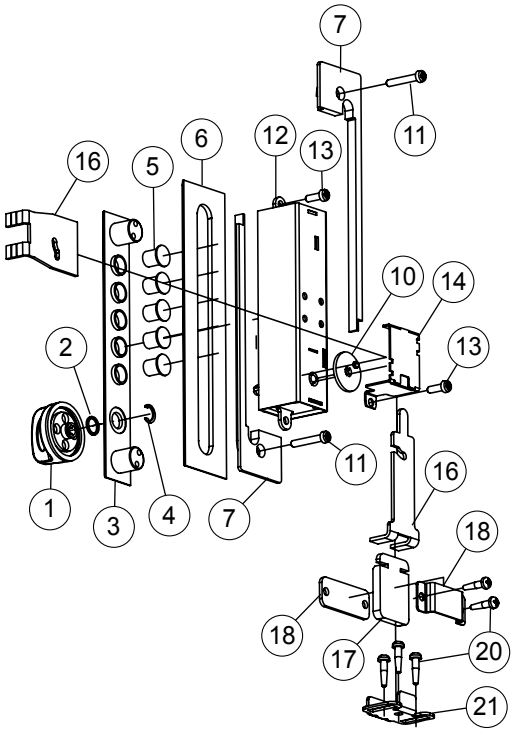

962 Wood/Spring Latch

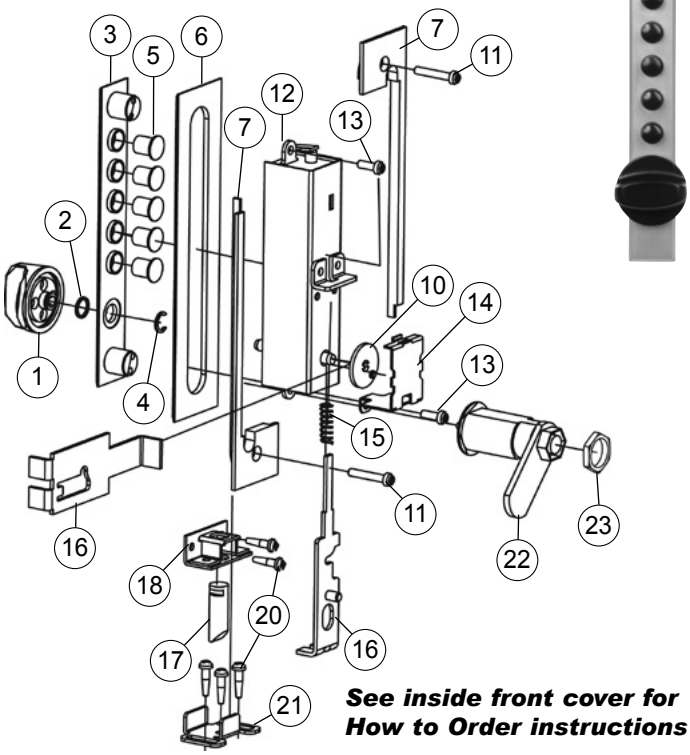

See inside front cover for How to Order instructions

966 Sheet Metal/Deadbolt

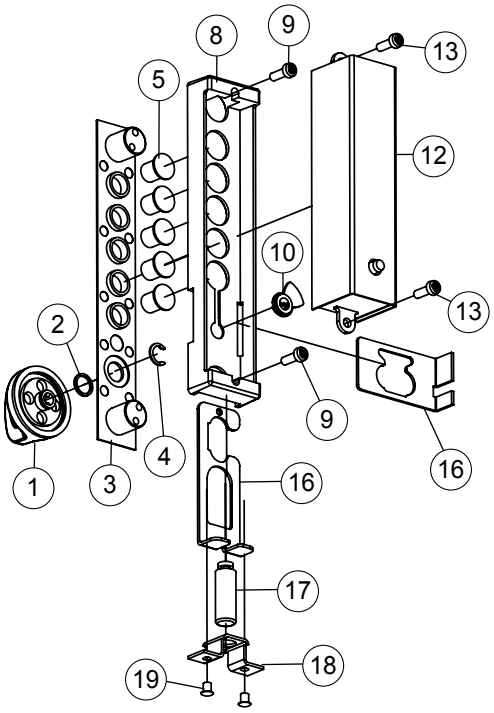

966 Sheet Metal/Spring Latch

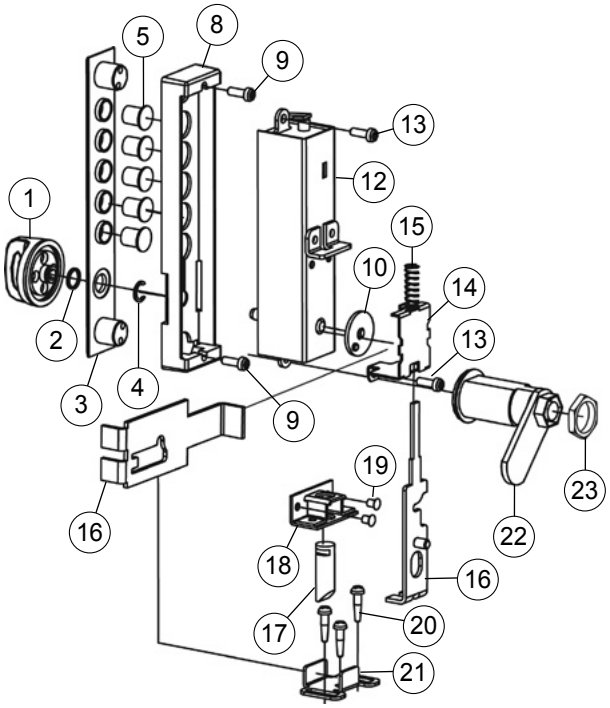

9600 Series Exploded View *(continued)*

Item	Qty/Lock	Description	Finish	Part Number	List Price
1	1	Clutch Knob Kit (Includes 1 ea. #1, #2,#4)	Black	7490608301	$13.00
2	1	Nylon Spacer (10 Pack)		3403700010	$11.00
3	1	Escutcheon Plate (fits wood application without trim plate) (sm 14-20 gauge)	Bright Brass	34031std0301	$11.00
		Escutcheon Plate (fits wood application without trim plate) (sm 14-20 gauge)	Satin Brass	34031std0401	$11.00
		Escutcheon Plate (fits wood application without trim plate) (sm 14-20 gauge)	Satin Chrome	34031std26D01	$11.00
		Escutcheon Plate (fits .125 wood application with trim plate) (sm 1/8" metal)	Bright Brass	340311250301	$11.00
		Escutcheon Plate (fits .125 wood application with trim plate) (sm 1/8" metal)	Satin Brass	340311250401	$11.00
		Escutcheon Plate (fits .125 wood application with trim plate) (sm 1/8" metal)	Satin Chrome	3403112526D01	$11.00
		Escutcheon Plate (fits .188 sheet metal applications) (sm 3/16" metal)	Bright Brass	340311880301	$11.00
		Escutcheon Plate (fits .188 sheet metal applications) (sm 3/16" metal)	Satin Brass	340311880401	$11.00
		Escutcheon Plate (fits .188 sheet metal applications) (sm 3/16" metal)	Satin Chrome	3403118826D01	$11.00
		Escutcheon Plate (fits .250 sheet metal applications) (sm 1/4" metal)	Bright Brass	340312500301	$11.00
		Escutcheon Plate (fits .250 sheet metal applications) (sm 1/4" metal)	Satin Brass	340312500401	$11.00
		Escutcheon Plate (fits .250 sheet metal applications) (sm 1/4" metal)	Satin Chrome	3403125026D01	$11.00
4	1	Knob Retainer Clip (10 Pack)		5401100010	$11.00
5	5	Push Buttons (.406" long)	Black	3401910610	$12.00
		Push Buttons (.590" long) (fits .188 and .250 sheet metal applications)	Black	20002410610	$12.00
6	1	Trim Plate	Black	3400508301	$9.00
7	2	Back Cover Plate (2 Pack)		3400600001	$11.00
8	1	Back Up Plate		3417300001	$11.00
9	2	Back Up Plate Screws (7/16" long) (sheet metal)		5443000010	$9.00
10	1	Cam Kit (CT sheet metal, non-spring loaded applications) (assy required) (Includes 1 ea. #10, #16, retainer ring)		2420900001	$13.00
		Cam Kit (CT wood, deadbolt applications) (Includes 1 ea. #10, #14, #16)		2404300001	$13.00
		Cam Kit (CT wood/sheet metal spring loaded bolt applications) (Includes 1 ea. #10,#14, #15, #16)		2450900001	$13.00
		Cam Kit (ET sheet metal, non-spring loaded applications) (assy required) (Includes 1 ea. #10, #16, retainer ring)		7410400001	$13.00
		Cam Kit (ET wood/sheet metal, spring loaded bolt applications) (Includes 1 ea. #10, #14, #15, #16)		7457000001	$13.00
		Cam Kit (ET wood deadbolt applications) (Includes 1 ea. #10, #14, #16)		2403600001	$13.00
11	2	Cover Plate Screws (#5 - 40 x 5/8" (16mm)) Wood Machine Screw (10 Pack)		5442700010	$9.00
		Cover Plate Screws (#5 - 40 x 3/4" (19mm)) Wood Machine Screw (10 Pack)		5442900010	$9.00
12	1	Combination Chamber Kit with Spring Return for Cross Throw Models (Includes 1 ea. #1, #2, #4, #12)		7488100001	$66.00
		Combination Chamber Kit NO Spring Return for deadbolt Models (Includes 1 ea. #1, #2, #4, #12)		7466200001	$66.00
		Combination Chamber Kit with Spring Return for Spring Loaded End Throw Models or Spring Loaded Cross Throw Conversion Kit Models (Includes 1 ea. #1, #2, #4, #12)		7491000001	$66.00
		Combination Chamber Kit NO Spring Return for 2 Point End Throw Models (Includes 1 ea. #1, #2, #4, #12)		7467800001	$66.00
13	2	Combination Chamber Screw Kit (#5 - 40 X 3/8" long (8mm))		5442800010	$9.00
14	1	Cam Cover (Included in follower kits - see #16)		see #16	$0.00
15	1	Follower Spring (ET spring loaded bolt only) (10 Pack)		5430000010	$9.00
16	1	Follower Kit (Sheet metal/wood, CT, spring loaded bolt) (Includes 1 ea. #10, #14, #15, #16)		2450900001	$13.00
		Follower Kit (Sheet metal/wood, ET, spring loaded bolt) (Includes 1 ea. #10, #14, #15, #16)		7457000001	$13.00
		Follower Kit (Sheet metal, CT, deadbolt) (Includes 1 ea. #10, #16, bushing and retainer (Not Shown)		2420900001	$13.00
		Follower Kit (Sheet metal, ET, deadbolt) (Includes 1 ea. #10, #16, bushing and retainer (Not Shown)		7410400001	$13.00
		Follower Kit (Wood, CT, deadbolt) (Includes 1 ea. #10, #14, #16)		2404300001	$13.00
		Follower Kit (Wood, ET, deadbolt) (Includes 1 ea. #10, #14, #16)		2403600001	$13.00

9600 Series Exploded View *(continued)*

Item	Qty/Lock	Description	Finish	Part Number	List Price
17	1	Latch Bolt Kit (Deadbolt, Round, Sheet metal) (Includes 1 ea. #17, #18; 2 ea. #19)		7403000001	$10.00
		Latch Bolt Kit (Deadbolt, Flat, Rectangular, Wood) (Includes 1 ea. #17, #18, #21; 2 ea. #11; 5 ea. #20)		7456100001	$10.00
		Latch Bolt Kit (Spring Loaded Bolt, Round, Sheet metal or wood) (Includes 1 ea. #17, #18, #21; 2 ea. #19; 5 ea. #20)		7470200001	$10.00
18	1	Bolt Guide (Included in follower kits - see #17)		see #17	$0.00
19	2	Rivets (10 Pack)		5403001810	$9.00
20	5	Bracket Screws (Fit wood or metal) (10 Pack)		5401600010	$9.00
21	1	Strike (fits TM/RM models) (Included in follower kits - see #17)		see #17	$0.00
22	1	Key Override Cylinder (Includes 1 ea. #22, #23) (Specify key cut)		7457300001	$14.50
23	1	Cylinder Nut (Includes 1 ea. #22, #23)		7457300001	$14.50

Additional Kits and Accessories

		Lubriplate Aero Grease Tubes		6475400001	$14.50

* Specify Finish: 03 - Bright Brass
04 - Satin Brass
26D - Satin Chrome

**Specify Key Cut

Notes:

• If an item number is included in a kit description, unless noted, that number is referencing the item number on the previous page.

• If an item number is not shown on a picture you are referencing, then it is not used on that model.

• Lubriplate Aero grease is the “only" lubricant that should be used.

Parts availability may be limited on older component parts no longer used in production units.

File Guard Series

See inside front cover for How to Order instructions

Item	Qty/Lock	Description	Finish	Part Number	List Price
	1	Replacement Cylinder for F2580 Series Bar		A6828SC	$16.50
	1	“Standard" Clevis Pin 3/8" Thread		F9451	$9.00
		“Standard" Clevis Pin 3" Thread		F9452	$10.00
	1	Notch Pin 3/8" Thread		F9460	$9.00
		Notch Pin 3" Thread		F9463	$10.00
	1	“Standard" Notch & Clevis Pin Set 3/8" Thread (2500 Series Accessory Pack)		F9470	$16.50
		“Standard" Notch & Clevis Pin Set 3" Thread		F9471	$20.00
	1	“Build-In-Lock" Notch Pin Set 3/8" Thread (2580 Series Accessory Pack)		F9474	$16.50
	1	Cam Cover, ET (FG Series)		2403500001	$6.50
	1	Cam, ET (FG Series)		2403600001	$5.50
	1	Bolt Retainer (FG Series)		2443600001	$5.50
	1	Follower Plate, ET (FG Series)		2443700001	$7.50
	1	Push Buttons (10 Pack) (FG Series)		3401910610	$12.00
	1	Spacer Washer (10 Pack) (FG Series)		3403700010	$11.00
	1	Lock Housing - Black - PBL (FG Series)		3413001201	$14.50
	1	Locking Bolt, Round (FG Series)		4428900001	$6.50
	1	Combination Chamber (Includes turn knob kit below) (FG Series)		7466200001	$66.00
	1	Turn Knob (Includes knob, spacer, retainer) (FG Series)		7490608301	$13.00
	1	Chamber Screw - Screw Pack (10 ea. 6-32 x 3/8", 5/16", 7/16")(FG Series)		6477600001	$11.00

Additional Kits and Accessories

		Lubriplate Aero Grease Tubes		6475400001	$14.50
		Accessory Pack (FG Series/F250x Series))		F25002	$17.50
		Accessory Pack (F257x Series)		F25703	$17.50
		Accessory Pack (F258x Series)		F25804	$17.50

Note: Lubriplate Aero grease is the “only" lubricant that should be used.

Parts availability may be limited on older component parts no longer used in production units.

LD450 Series

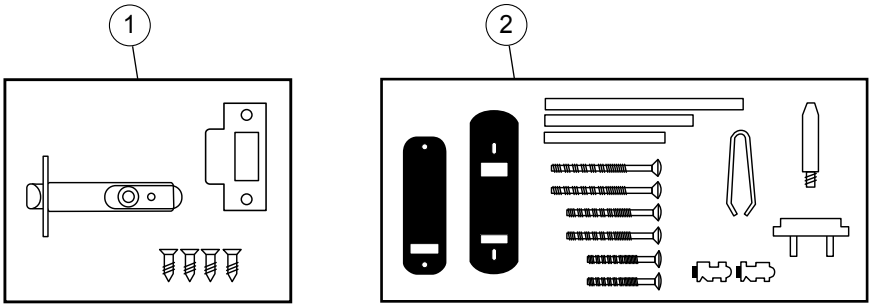

LD470 Series

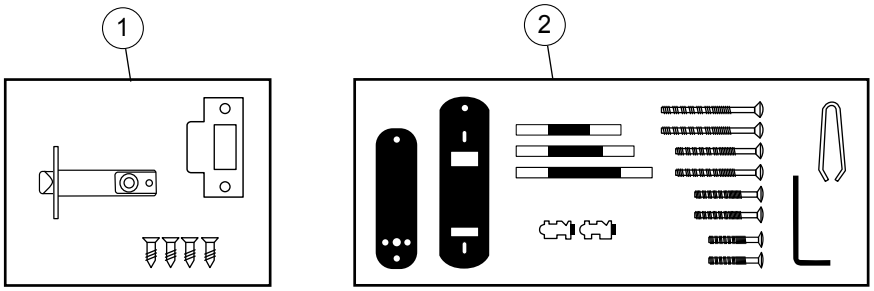

See inside front cover for How to Order instructions

Item	Qty/Lock	LD450 (Only) Parts	Finish	Part Number	List Price
1	1	2 3/8" Latch (Includes 1 ea. Latch, Strike, Strike Box; 4 ea. Mounting Screws)	Brass	647960301	$35.00
		2 3/8" Latch (Includes 1 ea. Latch, Strike, Strike Box; 4 ea. Mounting Screws)	Satin Stainless	6479632D01	$35.00
		2 3/4" Latch (Includes 1 ea. Latch, Strike, Strike Box; 4 ea. Mounting Screws)	Brass	647970301	$35.00
		2 3/4" Latch (Includes 1 ea. Latch, Strike, Strike Box; 4 ea. Mounting Screws)	Satin Stainless	6479732D01	$35.00
2	1	Installation Hardware Pack (Includes 1 ea. Tweezers, Latch Holdback Clip, Latch Support Post, Short/Medium/Long Spindles; 2 ea. Coded Tumblers - RED, Uncoded Tumblers - BLUE, Short/Medium/Long Mounting Bolts)	Brass	648000301	$31.00
		Installation Hardware Pack (Includes 1 ea. Tweezers, Latch Holdback Clip, Latch Support Post, Short/Medium/Long Spindles; 2 ea. Coded Tumblers - RED, Uncoded Tumblers - BLUE, Short/Medium/Long Mounting Bolts)	Satin Stainless	6480032D01	$31.00
		Lubriplate Aero Grease Tubes		6475400001	$14.50

Item	Qty/Lock	LD470 (Only) Parts	Finish	Part Number	List Price
1	1	2 3/8" Latch (Includes 1 ea. Latch, Strike, Strike Box; 4 ea. Mounting Screws)	Brass	647980301	$38.50
		2 3/8" Latch (Includes 1 ea. Latch, Strike, Strike Box; 4 ea. Mounting Screws)	Satin Stainless	6479832D01	$38.50
		2 3/4" Latch (Includes 1 ea. Latch, Strike, Strike Box; 4 ea. Mounting Screws)	Brass	647990301	$38.50
		2 3/4" Latch (Includes 1 ea. Latch, Strike, Strike Box; 4 ea. Mounting Screws)	Satin Stainless	6479932D01	$38.50
2	1	Installation Hardware Pack (Includes 1 ea. Tweezers, Hex Wrench, Lever Plug, Short/ Medium/Long Spindles; 2 ea. Coded Tumblers - RED, Uncoded Tumblers - BLUE, Extra Short/Short/Medium/Long Mounting Bolts)	Brass	648010301	$35.00
		Installation Hardware Pack (Includes 1 ea. Tweezers, Hex Wrench, Lever Plug, Short/ Medium/Long Spindles; 2 ea. Coded Tumblers - RED, Uncoded Tumblers - BLUE, Extra Short/Short/Medium/Long Mounting Bolts)	Satin Stainless	6480132D01	$35.00
		Lubriplate Aero Grease Tubes		6475400001	$14.50

Parts availability may be limited on older component parts no longer used in production units.

INDEX

Item Number	Page Number
3800-00-3007	22, 30, 35, 41, 43
34031std26D01	60
34031std0301	60
34031std0401	60
54266	57, 58
64855-000-01	26, 38
64856-000-01	26, 38
202014AW01	53
202014GV01	53
202014SV01	53
202025AC01	53
202025AW01	53
202025GV01	53
202025SV01	53
202026AC01	53
202026AW01	53
202026GV01	53
202026SV01	53
202075AC01	53
202075AW01	53
202075GV01	53
202075SV01	53
2410826D01	56
2419326D01	48
3401126D01	56
3401226D01	56
3402126D01	56
3402226D01	56
3402326D01	56
3404426D01	44
3404626D01	44
3404726D01	48
3418626D01	7, 11
3419726D01	9
3419926D01	9
3420026D01	9
3420126D01	9
3420326D01	9
3420426D01	9
3422926D01	2, 4, 13, 14, 63
3423026D01	2, 4, 13, 14
3423126D01	4, 13, 14
3423226D01	4, 13, 14
3423326D01	5, 13, 14
3423426D01	5, 14
3424426D01	7
3424526D01	7
3424626D01	7
3424726D01	8
3424826D01	7
3424926D01	7
3425026D01	7
3426326D01	18
3426426D01	18, 51
3426526D01	19
3426626D01	19
3426726D01	20
3426826D01	19

Item Number	Page Number
4411226D01	56
5405226D10	56
5405326D01	56
5406126D10	56
5408226D01	57
5409726D01	57
5413326D01	57
5444426D01	52
5456226D01	5, 10, 14
5456826D01	5, 10, 14
5506026D01	50
5507126D01	22, 31
5511526D01	50
5511626D01	50
5530026D01	50
6468326D01	8, 12
6472526D01	15
6475326D01	7, 11
6477426D01	53
6477726D01	41
6479632D01	63
6479732D01	63
6479832D01	63
6479932D01	63
6480032D01	63
6480132D01	63
6485826D01	8, 15
7411826D01	57
7412426D01	57
7412526D01	57
7416126D01	57
7416626D01	45
7429026D01	58
7441426D01	58
7442526D01	48
7446426D01	58
7446826D01	58
7446926D01	56, 57, 58
7447026D01	58
7447126D01	58
7454326D01	34, 39, 43
7454426D01	43
7455426D01	43
7484426D01	6, 11
7485926D01	8, 12
7487626D01	6, 11
7490426D01	6, 11
7492726D01	6, 11
7495626D01	5
7495726D01	10
7496026D01	5
7496126D01	10
7497626D01	14
7518526D01	29, 50
20001326D01	44, 45
20104926D01	18
20114426D01	6, 11, 21, 29
20141726D01	23

Item Number	Page Number
20149026D01	23
20151926D01	23
20153226D01	23
20155826D01	23
20156526D10	20, 26, 37, 51
20160526D01	22, 30
20170026D01	26
20173626D01	20, 26
20174526D01	20, 27
20177026D01	27
20177126D01	27
20178526D01	27, 38
20178626D01	27, 38
20178726D01	20, 27
20179026D01	27, 38
20179126D01	27, 38
20180726D01	20, 28
20181826D01	20, 28
20182126D01	22, 30
20182926D01	28, 38
20183026D01	28, 38
20184526D01	31
20184626D01	31
20187126D05	34
20192326D01	34
20192426D01	34
20192526D01	28, 39
20192626D01	28, 39
20192726D01	28, 39
20192826D01	28, 39
20192926D01	28, 39
20193026D01	28, 39
20193126D01	31
20193226D01	31
20193326D01	31
20193426D01	31
20193526D01	32
20193626D01	32
20193726D01	32
20193826D01	32
20201426D01	53
20202526D01	53
20202626D01	53
20205226D01	53
20206426D01	53
20207526D01	53
20300026D01	39, 43
20400426D01	22, 31
20411926D01	6, 11, 21, 29
20416826D01	6, 10, 21, 29, 50
20416926D01	21, 29, 51
20420026D01	21, 29, 51
20420226D01	21, 30
20420326D01	21
20420426D01	29, 30
20420526D01	30
20420626D01	51
20420726D01	51

Item Number	Page Number
20421026D01	19, 20, 21, 26, 29, 30, 34, 37, 51
20421126D11	21, 30
20421226D11	35
20422726D01	6, 11, 20, 29, 51
20423026D01	54
30101941	49
30201941	49
30301941	49
30401941	49
80121826D01	40
80122726D01	40
80124326D01	40
80124826D01	40
80124926D01	40
80125926D01	41
80126226D01	40
80126526D01	41
80126626D01	41
80127326D01	40
80127426D01	40
80127626D01	40
80127826D01	41
80127926D01	7, 11, 40
80128726D01	41
80128826D01	41
241935501	48
340110401	56
340120401	56
340210401	56
340220401	56
340230401	56
340475501	48
341860301	7, 11
341860401	7, 11
341970301	9
341970401	9
341990301	9
341990401	9
342000301	9
342000401	9
342010301	9
342010401	9
342030301	9
342030401	9
342040301	9
342290301	2, 4, 13, 14
342290401	2, 4, 13, 14
342300301	4, 13, 14
342300401	4, 13, 14
342310301	4, 13, 14
342310401	4, 13, 14
342320301	4, 13, 14
342320401	5, 13, 14
342330301	5, 13, 14
342330401	5, 14
342340301	5, 14
342340401	5, 14
342440301	7

Item Number	Page Number
342440401	7
342450301	7
342450401	7
342460301	7
342460401	7
342470301	8
342470401	8
342480301	7
342480401	7
342490301	7
342490401	7
342500301	7
342500401	7
342630301	18
342630501	18
342640301	18, 51
342640501	18
342650301	19
342650501	19
342660301	19
342660501	19
342670301	20
342670501	20
342680301	19
342680501	19
441120401	56
442291910	48
540520410	56
540530401	56
540610410	56
540820401	57
540970401	57
541330401	57
544440301	52
545620401	5, 10, 14
545680401	5, 10, 14
550600301	50
550710301	22, 31
550710501	22, 31
550721901	51
551150301	50
551160301	50
553000301	50
646830301	8, 12
647250301	15
647530301	7, 11
647740301	53
647960301	62
647970301	63
647980301	63
647990301	63
648000301	63
648010301	63
648580301	8, 15
648580401	8, 15
741180401	57
741240401	57
741250401	57

Item Number	Page Number
741610401	57
742900401	58
743491901	48
743771901	48
744140401	58
744255501	48
744640401	58
744680401	58
744690401	56, 57, 58
744700401	58
744710401	58
745430301	34, 39, 43
745430501	39, 43
745440301	43
745540301	43
748440301	6, 11
748440401	6, 11
748590301	8, 12
748760301	6, 11
748760401	6, 11
749040301	6, 11
749040401	6, 11
749270301	6, 11
749270401	7, 11
749560301	5
749560401	5
749570301	10
749570401	10
749600301	5
749600401	5
749610301	10
749610401	10
749760301	14
749760401	15
751850301	6, 21, 29, 50
751850401	6
751850501	21, 29
751852601	6, 21
2010490301	18
2010490501	18
2011440301	6, 11, 21, 29
2011440501	21, 29
2014170301	23
2014170501	23
2014900301	23
2014900501	23
2015190301	23
2015190501	23
2015320301	23
2015320501	23
2015580301	23
2015580501	23
2015650310	20, 26, 37, 51
2015650510	20, 26, 37, 51
2016050301	22, 30
2016050501	22, 30
2017000301	26
2017000501	26

Item Number	Page Number
2017360301	20, 26
2017360501	20, 26
2017450301	20, 27
2017450501	20, 27
2017700301	27
2017700501	27
2017710301	27
2017710501	27
2017850301	27, 38
2017850501	27, 38
2017860301	27, 38
2017860501	27, 38
2017870301	20, 27
2017870501	20, 27
2017900301	27, 38
2017900501	27, 38
2017910301	27, 38
2017910501	27, 38
2018070301	20, 28
2018070501	20, 28
2018180301	20, 28
2018180501	20, 28
2018210301	22, 30
2018210501	22, 30
2018290301	28, 38
2018290501	28, 38
2018300301	28, 39
2018300501	28, 39
2018450301	31
2018450501	31
2018460301	31
2018460501	31
2018710305	34
2018710505	34
2019230301	34
2019230501	34
2019240301	34
2019240501	34
2019250301	28, 39
2019250501	28, 39
2019260301	28, 39
2019260501	28, 39
2019270301	28, 39
2019270501	28, 39
2019280301	28, 39
2019280501	28, 39
2019290301	28, 39
2019290501	28, 39
2019300301	28, 39
2019300501	28, 39
2019310301	31
2019310501	31
2019320301	31
2019320501	31
2019330301	31
2019330501	31
2019340301	31
2019340501	31

Item Number	Page Number
2019350301	32
2019350501	32
2019360301	32
2019360501	32
2019370301	32
2019370501	32
2019380301	32
2019380501	32
2020140301	53
2020140501	53
2020250301	53
2020250501	53
2020260301	53
2020260501	53
2020281901	53
2020520301	53
2020640301	53
2020750301	53
2020750501	53
2020751901	53
2030000301	39, 43
2030000501	39, 43
2040040301	22, 31
2040040501	22, 31
2041190301	6, 11, 21, 29
2041190401	6, 11
2041190501	21, 29
2041680301	6, 10, 21, 29, 50
2041680401	6, 10
2041680501	21, 29
2041690301	21, 29, 51
2041690501	21, 29
2042000301	21, 29, 51
2042000501	21, 29
2042020301	21, 30
2042020501	21, 30
2042030301	21
2042030501	21
2042040301	30
2042040501	30
2042050301	30
2042050501	30
2042060301	51
2042070301	51
2042100301	19, 20, 21, 26, 29, 30, 34, 37, 51
2042100501	19, 20, 21, 26, 29, 30, 34, 37
2042110311	21, 30
2042110511	21, 30
2042120311	35
2042120511	35
2042270301	6, 11, 20, 29, 51
2042270401	6, 11
2042270501	20, 29
2042300301	54
2403500001	62
2403600001	60, 62
2404300001	60
2404600001	56

Item Number	Page Number
2406300001	56
2408600005	58
2410900001	44
2416500001	48
2420900001	60
2443600001	62
2443700001	62
2447100001	5, 10
2450900001	60
2452000001	14
2452700001	14
3400508301	60
3400600001	60
3401910610	50, 60, 62
3403112526D01	60
3403118826D01	60
3403125026D01	60
3403700010	56, 60, 62
3413001201	62
3417300001	60
3418602601	7
3418674401	7, 11
3418900010	5, 10
3419100010	7, 11
3419774401	9
3419974401	9
3420074401	9
3420174401	9
3420374401	9
3420474401	9
3422902601	2, 4, 13, 14
3422974401	2, 4, 13, 14
3423002601	4, 13, 14
3423074401	4, 13, 14
3423102601	4, 13, 14
3423174401	4, 13, 14
3423202601	5, 13, 14
3423274401	5, 13, 14
3423302601	5, 14
3423374401	5, 14
3423402601	5, 14
3423474401	5, 14
3424402601	7
3424474401	7
3424502601	7
3424574401	7
3424602601	7
3424674401	7
3424702601	8
3424774401	8
3424802601	7
3424874401	7
3424902601	7
3424974401	7
3425002601	8
3425074401	7
3426302601	18
3426402601	18

Item Number	Page Number
3426502601	19
3426602601	19
3426702601	20
3426802601	19
3430800001	15
4412100010	44
4412200001	44
4418800010	48
4419100010	48
4420700010	48
4421400010	48
4422601210	48
4422906810	15
4424700001	43
4428900001	62
5401100005	56
5401100010	60
5401600010	61
5402900010	56
5403001810	61
5405000010	56
5407000010	56
5407400010	56
5407500010	57
5407700010	44, 57
5408400010	57
5409900010	57
5410900010	57
5411400010	48
5412000010	57
5419800010	43, 44
5423700010	48
5424600010	50, 52
5424700010	48
5425100010	48
5425300010	48
5425800001	48
5426000010	48
5426500010	48
5427506810	48
5428400010	48
5428500001	48
5430000010	60
5442700010	60
5442800010	60
5442900010	60
5443000010	60
5446100010	6, 10, 15
5446300010	7, 11
5448200010	8, 12, 15
5451400010	8, 12, 15
5451700010	5, 10, 14
5452700010	5, 10, 14
5456900010	10
5459700010	15
5461800001	5, 8, 10
5463100010	57
5500106001	50

Item Number	Page Number
5500106701	50
5500108501	50
5500108601	50
5504400001	50
5505700001	50
5508000010	50, 52
5509100001	50
6414300001	48
6414400001	48
6414500001	48
6414600001	48
6470600001	5, 8, 14
6470700001	5, 14
6471200001	6, 10, 11, 15
6471700001	5, 7, 10, 11, 14, 44
6472400001	5, 10
6474300001	14
6474500001	14
6474700001	5, 10
6474800001	6, 10
6475200001	7, 11
6475400001	8, 12, 15, 22, 30, 35, 41, 43, 45, 49, 51, 54, 58, 61, 62, 63
6475500001	48
6476600001	44
6476700001	48
6476800001	48
6476900001	53
6477200001	50, 51
6477600001	5, 10, 15, 20, 29, 39, 45, 49, 51, 53, 57, 61, 62
6479200001	22
7403000001	60
7408000001	57
7410300001	57
7410400001	60
7430000001	58
7430100001	58
7430200001	45
7430300001	43, 45
7430400001	45
7433100001	48
7433200001	48
7433300001	48
7433400001	48
7434800001	48
7435400001	48
7436600001	18, 25, 37, 48
7452900001	43
7456100001	61
7457000001	60
7457300001	61
7466000001	52
7466200001	60, 62
7467800001	60
7467900001	43
7470200001	61
7477300001	43, 45
7483200001	5, 10, 15
7483600001	5, 10, 14

Item Number	Page Number
7484100001	6, 10
7484402601	6
7484408301	6, 11
7484474401	6, 11
7487000001	50, 51
7487602601	6
7487608301	6, 11
7487674401	6, 11
7488100001	60
7489200001	5, 8, 10
7490000001	5, 10
7490402601	6
7490408301	6, 11
7490474401	6, 11
7490608301	62
7491000001	60
7492702601	7
7492708301	7, 11
7492774401	7, 11
7495400001	5
7495602601	5
7495608301	5
7495674401	5
7495708301	10
7495774401	10
7496002601	5
7496008301	5
7496074401	5
7496108301	10
7496174401	10
7496800001	15
7497602601	15
7497608301	15
7497674401	15
7498700001	8
7498800001	8
7498900001	8
7499000001	8
7511600001	15
7518574401	6
7520100001	15
7520700001	6, 10, 15
7524608301	15
8012180301	40
8012180501	40
8012270301	40
8012270501	40
8012430301	40
8012430501	40
8012480301	40
8012480501	40
8012490301	40
8012490501	40
8012590301	41
8012590501	41
8012620301	40
8012620501	40
8012650301	41

Item Number	Page Number
8012650501	41
8012660301	41
8012660501	41
8012730301	40
8012740301	40
8012760301	40
8012760501	40
8012780301	41
8012780501	41
8012790301	7, 11, 40
8012790401	7, 11
8012790501	40
8012870301	41
8012880301	41
20002410610	18, 25, 37, 49, 52, 60
20002410910	18, 25, 37, 45, 49, 52
20002600005	18, 25, 37
20021000001	23
20100900001	18
20101600001	18, 34, 35
20104000001	18
20104902601	18
20105000001	18
20114474401	6, 11
20127700001	18, 25, 34, 51
20127800001	18, 25, 37, 49, 51
20128700001	18, 25, 51
20130400001	18
20133600001	18, 25, 26
20134300005	18, 26, 37
20136500001	18
20136600010	18, 26, 34, 51
20139100001	18
20141400001	18
20141702601	23
20142100001	18
20142200002	18, 26, 37
20142500001	18, 26, 37
20143000001	18
20143900001	19
20144000010	6, 10, 19, 26, 37
20144600010	19, 26, 34, 51
20149002601	23
20149900001	19
20151902601	23
20152400001	19
20153000001	19
20153202601	23
20154700001	19
20154800001	19
20155500001	20
20155802601	23
20156800005	20, 26, 51
20156900001	20, 26
20157500001	23
20157700001	23
20157800001	23
20158000001	23

Item Number	Page Number
20160900001	20
20170002601	26
20170800001	26, 37
20172100001	26, 37
20172300001	20, 26, 51
20172700001	26, 38
20173000001	26, 38
20173200001	26, 38
20173300001	26, 38
20173400001	26, 38
20173602601	20, 26
20173800001	20, 26
20174000010	6, 11, 20, 27, 38
20174502601	20, 27
20176800001	26, 27, 37, 38
20177002601	27
20177102601	27
20177200001	27
20177300001	27, 38
20177400001	27, 38
20178000001	27, 38
20178100001	27, 38
20178200001	20, 27, 51
20178502601	27, 38
20178602601	27, 38
20178800001	27
20178900001	27
20179002601	27, 38
20179102601	27, 38
20179200001	28, 38
20181200001	28
20181300001	28
20182500001	18, 28, 38
20182902601	28, 38
20183002601	28, 39
20183100001	28
20183200001	28
20184000001	28
20184200001	28, 39
20184502601	31
20184602601	31
20188200001	34
20190500001	34
20190600002	34
20190700010	34
20191100002	34
20191200001	34
20191600001	34
20191800002	34
20192502601	28, 39
20192602601	28, 39
20192702601	28, 39
20192802601	28, 39
20192902601	28, 39
20193002601	28, 39
20193102601	31
20193202601	31
20193302601	31

Item Number	Page Number
20193402601	31
20193502601	32
20193602601	32
20193702601	32
20193802601	32
20195600001	34
20200400001	53
20201200001	53
20201406001	51
20201406701	51
20201408501	51
20201408601	51
20202100005	53
20207700001	54
20207900001	54
20208000001	54
20208100001	53
20209100001	53
20300002601	39, 43
20401000001	29
20401500001	20, 29, 34
20402200001	8, 22, 30
20402300001	8, 22, 30
20402800001	22, 30, 35, 41, 43
20402900001	22, 30, 35, 41, 43
20403600001	40
20403700001	40
20403800001	40
20404300001	43
20411200005	43
20411974401	6
20412000005	20, 29, 40, 51
20413800001	51
20416000010	20
20416400001	34
20416500001	34
20416600010	43
20416874401	6
20416902601	29
20419900001	21, 29, 34, 51
20420002601	21, 29
20420202601	21, 30
20420800001	35
20420900001	35
20422702601	20, 29
20422774401	6
40275091941	52
74042200001	57
74162100001	57
74162200001	57
74163100001	57
74163200001	57
74164200001	57
74164400001	57
74167200001	57
74167400001	57
74241200001	44, 45
80121802601	40

Item Number	Page Number
80123100001	40
80123900001	40
80124000001	40
80124500001	40
80124700001	40
80125200001	40
80125300001	40
80125700001	40
80126000001	40
80126502601	41
80126602601	41
80127200001	40
80127802601	41
80129300001	40
340311250301	60
340311250401	60
340311880301	60
340311880401	60
340312500301	60
340312500401	60
A	
A6828SC	61
F	
F9451	62
F9452	62
F9460	62
F9463	62
F9470	62
F9471	62
F9474	62
F25002	62
F25703	62
F25804	62
K	
KABA90	5, 10, 14
P	
PKG2863	8, 12
PKG3052	15
S	
SP710226D01	54
SP710426D01	54
SP71020301	54
SP71040301	54
SP71061901	54

KABA BEYOND SECURITY

Technical Bulletin

Simplex 5000 Enter Button Service Kit

Bulletin Number: 2014-03
Distribution: Internal, Sales, Distribution
Status: Please Distribute

Now available from Kaba, the Simplex 5000 Enter Button Service Kit. This new universal kit will fit any Simplex 5000 series lock, regardless of the age or locking device. Simply choose the kit according to the finish required and place an order through your Kaba dealer.

This easy do-it-yourself kit includes enough parts to service 2 locks. Each kit includes:

2 Enter Buttons	2 Inside Springs
2 Lower Enter Buttons	2 Outside Springs
3 Enter Button Screws	1 Installation Gauge
1 Instruction Packet	1 Kaba Installation Screwdriver

Service kit part numbers are listed below:

- 6485826D01 (satin chrome)
- 648580301 (bright brass)
- 648580401 (satin brass)

Retail list price for these kits is $78.00 ea.

For more detail, contact Kaba customer service at 800 849 8324.

Technical Bulletin

KABA

Bulletin Number: 2013-06

Subject: L1000 Service kits - no longer shipping with fixed sleeves

Distribution List: Distribution Partners, Certified Dealers, Kaba Sales Reps, RSMs, and Internal

To Our Valued Business Partners:

Effective immediately, the L1000 service kits will no longer ship with the inside lever fixed sleeve included in each service kit.

Due to design changes within the inside lever assembly, the fixed sleeve previously included in the L1000 service kits (for the old style lever with brass insert) will no longer fit current production inside levers. This change has been in place since June 2010.

Here are some options for the inside lever repair or replacement if using an old style lever with brass insert. The old style fixed sleeve kits (201727-000-01 and 201733-000-01) will be available until inventory is depleted. Once depleted, a new current production inside lever assembly can be ordered and used in lieu of the fixed sleeve kit. The part numbers for these inside lever assemblies are 201785-***-01 for the right hand and 201786-***-01 for the left hand.

This change only affects the repair of the inside lever and in no way impacts the look, feel or use of the inside lever assembly.

Old style with Brass Insert

New Style with No Insert

A new, inside lever fixed kit is available for levers produced after May 2010, which can be used to repair new style levers as shown above. The part numbers for these kits are 64855-000-01 for the right hand and 64856-000-01 for the left hand.

If you have any questions regarding this information, please contact our customer service department at **800-849-8324**.

BEYOND SECURITY

Kaba Access & Data Systems Americas
2941 Indiana Avenue
Winston-Salem NC 27105
Phone: 1-800-849-8324

www.kaba-adsamericas.com

KAA1099-0715