BEYOND SECURITY KABA®

Mechanical Lock *Price Book*

Effective May 1, 2015

BEYOND SECURITY

General Terms and Conditions of Sale

1. **ENTIRE AGREEMENT:** This Agreement constitutes the entire agreement between KABA ILCO Corp. dba Kaba Access Control ("KABA") and the Purchaser, and contains all of the terms and conditions relating to the sale of the product(s). This agreement supersedes all prior agreements, previous catalog terms and conditions, and other documents unless expressly incorporated herein

2. **PAYMENT TERMS:** Unless otherwise stated, terms are net 30 days from the date of invoice. KABA reserves the right to charge interest at 1.5% per month (18% annually) on any overdue amounts. If KABA discovers that the Purchaser's financial condition does not warrant the above payment terms, then KABA, in its absolute discretion, may demand that the Purchaser pay in advance, pay cash upon delivery, or refuse Purchaser's order. In the latter case, KABA cannot be held liable for any damages of any nature whatsoever for its refusal to deliver goods in whole or in part.

3. **PRICES:** The product price(s) shall be according to KABA's price list in effect at the time of acceptance of the purchase order or according to its authorized quotation in force at the time of acceptance of the applicable purchase order.

4. **TAXES:** The price does not include any amounts for U.S. or International Federal Custom Duties, Canadian, U.S. or International, Federal, Provincial, State, Local Excise, Goods and Services, Sales or Use, or Value added taxes. However, should KABA be obligated to pay any of the foregoing taxes, the Purchaser, upon demand, shall, within fifteen (15) days, reimburse KABA the total amount disbursed in respect thereof.

5. **MINIMUM ORDER REQUIREMENTS: The minimum order amount for all orders accepted is $400 USD**, excluding the shipping and insurance charges. This does not apply to cut keys.

6. **PRODUCT INFORMATION:** Unless expressly stated in this Agreement, all information contained in the product brochures, pamphlets, or information circulars, are for reference purposes only and based on information available at time of publication. KABA reserves the right to make reasonable changes in its products or discontinue certain products from time to time and to deliver the modified products, or to offer replacement product in the event a product has been discontinued without any liability whatsoever. Purchaser shall have the option to purchase any other product in the event of a discontinued product, provided however, Purchaser shall be responsible to pay any price difference.

7. **INSTALLATION:** Unless otherwise expressly stated, the costs and materials required for installation are not included in the prices and/or quotations.

8. **POINT OF DELIVERY & SHIPPING:** Delivery points and terms are FOB KABA warehouses in the Continental USA and Canada for KABA products. Should Purchaser request a shipping method or carrier different than KABA's standard, then the full amount of the shipping cost will be invoiced to the Purchaser. Drop shipments to a third party are subject to a $25 surcharge, which is invoiced to Purchaser. Kaba will no longer ship to third parties in Canada.

9. **DELIVERY TERMS:** KABA will notify the Purchaser if for any reason, it is unable to deliver the products as scheduled, and Kaba cannot be held liable for any damages of any nature resulting from these delays.

10. **FORCE MAJEURE:** Should a delay in delivery be caused by a Force Majeure event, the time of delivery shall be extended by a reasonable amount of time with regard to all applicable circumstances. Upon mutual agreement, the parties shall set a new date for delivery. Except as to payments due hereunder, neither party shall be liable for failure to perform hereunder for the duration of and to the extent such failure is occasioned by a Force Majeure event, which is defined as follows: war, riots, insurrections, fire, flood, explosions, strikes and other labor or industrial disturbances, inevitable accidents, Government, State, Provincial or Municipal regulations and/or ordinances, an act of God, embargoes, blockades, delay in obtaining materials, legal restrictions, currency regulations, or any cause or condition beyond the reasonable control of the parties. Where such conditions continue for more than three (3) months, either party shall be free to terminate the Agreement. In the case of termination, KABA shall be paid the value proportionate to the Agreement price for the finished product and/or the work-in-progress as of the date of termination and the supportable costs.

11. **FAILURE TO ACCEPT DELIVERY:** If Purchaser fails to accept delivery at the scheduled time, the purchase price shall become due and payable in accordance with the original payment schedule and all risks associated with the product or parts of the product to be delivered, shall be borne by the Purchaser. Purchaser shall be responsible for all storage and handling costs incurred and to be incurred as a result thereof.

12. **TITLE:** Unless otherwise stipulated in this Agreement, ownership of the goods shall remain with KABA until full payment of the sale price has been received. Until complete payment has been received, Purchaser undertakes to warrant and keep the goods free and clear of all liens, other charges or encumbrances.

13. **RETURN POLICY:** Purchaser must obtain a Return Goods Authorization (RGA) number from KABA's Customer Service by calling in North America: (800) 849-8324 or Worldwide: (336) 725-1331, before returning any products whatsoever. The Purchaser must have the product serial number and invoice number pertaining to the original purchase available to give to the Customer Service Agent. KABA will send via Facsimile or email (as indicated by Purchaser) the Return Goods Authorization form, which includes the RGA number along with the "Ship To" address and RGA return instructions. RGAs expire after sixty (60) days from date of issuance. Returns of product by Purchaser are FOB KABA.

General Terms and Conditions of Sale (continued)

14. WARRANTY: Subject to the limitations herein, KABA warrants its new products from the date received by Purchaser from material or workmanship flaws. Specific new product warranties may vary according to products and if different, they are listed in the respective product section of the Access Control catalog or the respective product installation manual. Third party product(s) sold by KABA are warranted only to the extent provided by the original manufacturer's warranty and Purchaser must refer to the original manufacturer's warranty in such case. Refurbished or reconditioned KABA products are warranted for a ninety (90) day period from date of shipment. Failure of the Purchaser to notify KABA within the time limit set in this section shall constitute Purchaser's waiver to have the malfunction or damage remedied. The express warranties as set out herein, are the exclusive warranties given and accepted in lieu of any and all other warranties, expressed or implied, statutory or otherwise, including but not limited to warranty of fitness for a particular purpose and merchantability. To the extent that they cannot be disclaimed, the implied warranties are limited in duration to the life of the express warranty. Incidental and consequential damages are excluded from coverage under this warranty. Some States/jurisdictions do not allow for the disclaimers, limitations and exclusions identified above; as a result, they may not apply to you. This warranty gives you specific rights, and you may also have other legal rights which may vary from State to State, or from one jurisdiction to another. No distributor, dealer, sales representative nor any other person has been authorized to make any affirmation, representation or warranty regarding the product, other than those contained in this limited warranty, and if made, shall not be enforceable against KABA. KABA reserves the right to modify this warranty at any time, it being understood that such modification will not alter the warranty conditions applicable to the products sold while this warranty is in effect.

- KABA will, at their discretion and at no charge, either repair, exchange or replace the product provided it is returned complete to KABA during the warranty period. However, Purchaser is responsible for the labor to remove and reinstall the product(s) from Purchaser's premises.
- Defective parts, which have been replaced, become the property of KABA who may dispose of them in any manner. Replacement parts become the property of the Purchaser upon their delivery.
- KABA is not liable for any defects in materials, designs, drawings or information provided by the Purchaser, nor for information which is missing and could not be reasonably identified as such, by KABA.
- KABA does not warrant the following:
  - (a) Normal wear and tear from use;
  - (b) Printer ribbons, batteries, key cards and other consumable parts used or supplied with the product;
  - (c) Damage of any nature to hardware finishes;
  - (d) Faulty or defective product operation(s) caused by unusual or unforeseeable use or conditions;
  - (e) Improper installation, operation or maintenance of the product;
  - (f) Any product or system in which KABA's product(s) is incorporated;
  - (g) Force Majeure as defined by Section 10 of this Agreement;
  - (h) Repairs or alterations carried out by anyone other than KABA;

14.1 VARIANCE: Any claims that the quantity and description of goods delivered and the quantity and description of goods ordered do not conform to this Agreement are waived unless the Purchaser advises KABA's Customer Service department in writing, within fifteen (15) days from the date of receipt of the product(s).

14.2 RETURNS FOR CREDIT: In order to return new merchandise, the Purchaser must obtain a Returned Goods Authorization (RGA) number from KABA Customer Service department. There is a twenty-five percent (25%) restocking charge applied to all returns of new product. Custom products cannot be returned for credit for any reason other than product failure. Credit will not be offered for product that is returned incomplete or damaged.

15. LIMITATION OF LIABILITY: The total liability of KABA for all claims of any kind, whether in contract, liability or otherwise, arising out of, connected with or resulting from KABA's performance or breach of this Agreement or services furnished hereunder shall in no event exceed the total purchase price expressed in this Agreement. KABA shall not under any circumstances be held liable for loss of profits or revenues, loss of use of product or any other product software, system, or facility, loss of data or information, lack or loss of productivity, interest charges or cost of capital, cost of substitute product, software, systems or services, cost of purchases or replacement power, downtime costs. Incidental, special, consequential damages are excluded from coverage under this warranty.

16. ASSIGNMENT: KABA may assign this Agreement in whole or in part, to any parent, subsidiary or affiliated corporation. Subject to the prior written approval of KABA, Purchaser may assign the present Agreement to any parent, subsidiary or affiliated corporation.

17. DAMAGES: If Purchaser does not fulfill its obligations or is in default or breach of contract by the terms of this Agreement, KABA may then terminate the Agreement by notice in writing as set out on the face of KABA's acknowledgement. KABA has the right to claim compensation for any loss it incurs as a result of Purchaser's default, in addition to any other rights or recourse in equity and in law.

18. APPLICABLE LAW: This Agreement shall be governed by and construed in accordance with the laws of the State of North Carolina, USA.

19. TERMINATION: If the Purchaser terminates this Agreement, in whole or in part, by written notice, KABA will, upon receipt of the termination notice, cease the performance of the contract according to the instructions of the Purchaser. In such a case, Purchaser may be invoiced for costs incurred depending on the nature of the product and shall be responsible for payment of same.

20. SEVERABILITY: Any term, condition or provision of this Agreement, or any part thereof, which is or may be found to be prohibited or unenforceable in any jurisdiction shall, as regards such jurisdiction and to the extent of such prohibition or unenforceability, be deemed to be severed from this Agreement, and the remaining terms, conditions and provisions of this Agreement shall remain in full force and effect.

21. WAIVER: Any act or omission by KABA will not constitute or be deemed to be a waiver of the rights granted to KABA by the terms of this Agreement.

Disclaimer: While reasonable efforts were made to ensure the accuracy of this document at the time of printing, Kaba assumes no liability for any errors or omissions. This information is subject to be revised without notice, and changes may be incorporated in future releases.

KABA BEYOND SECURITY

Table of Contents

Simplex 5000 Series

Pages **4-9**

Simplex 1000 Series

Pages **10-13**

Simplex L1000 Series

Pages **14-17**

Simplex EE1000 Series

Pages **18-21**

Simplex 8100 Series

Pages **22-24**

Simplex LP1000 Series

Pages **25-27**

Simplex 2015 Series

Pages **28-30**

Simplex 3000 Series

Pages **31-33**

Simplex 6200 Series

Pages **34-36**

Simplex 7100 Series

Pages **37-39**

Simplex 900 Series

Pages **40-43**

Simplex 9600 Series

Pages **44-47**

Simplex File Guard Series

Pages **48-50**

Simplex LD450 Series

Pages **51-53**

Simplex LD470 Series

Pages **54-56**

Simplex Accessories

Pages **57-59**

How to Order

To order any of the products in this catalog, a part number must be provided. In most situations the part number has to be assembled to specify the desired product, as various options are available.

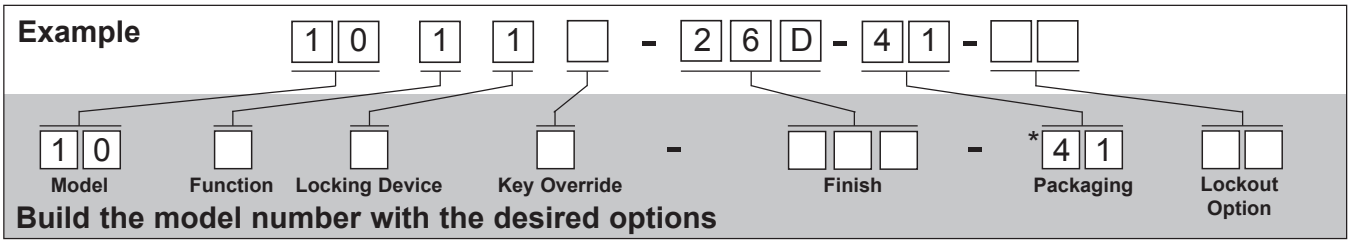

41—refers to one lock per cardboard box

Door Handing

Some locks also require you to specify door handing. To determine handing, face the door from the exterior (access) side and select the corresponding diagram below.

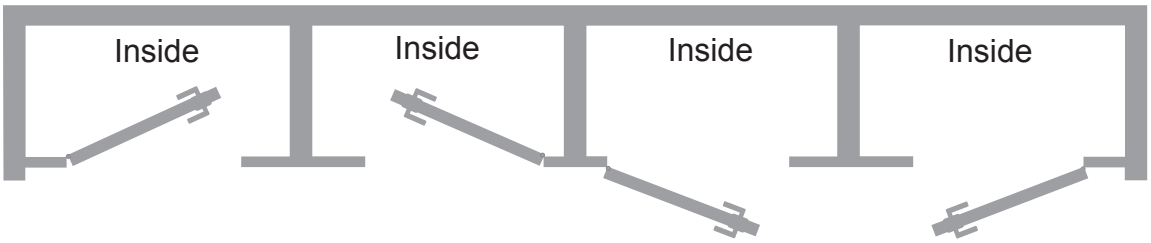

Left Hand | Right Hand | Left Hand Reverse | Right Hand Reverse

Where to Order

Contact your local supplier or call 1.800.849.8324 or 1.336.725.1331

follow us on twitter @kabaaccess

For More Information

www.kaba-adsamericas.com

The following are registered names and/or trademarks:
Abloy®, Adams Rite®, Arrow®, ASSA®, Best®, Black & Decker®, Cal Royal®, Corbin Russwin®, Detex®, Dorma®, Precision®, Kaba®, Marks®, Medeco®, Monarch®, Precision®, Sargent®, Schlage®, Simplex®, Von Duprin®, Weiser®, Yale®

KABA® BEYOND SECURITY

Simplex® 5000 Series

- **Mechanical Pushbutton Lock**
- **Single Access Code**
- **Cylindrical, Exit Trim, and Mortise**
- **Lever/Knob**
- **ANSI/BHMA Grade 1 Certified**

Features

Access Control: Mechanical pushbutton lock eliminates problems and costs associated with issuing, controlling, and collecting keys and cards. Provides exterior access by combination, while allowing free egress.

No Battery: Fully mechanical lock eliminates the material and labor expense of battery replacements

Locking Device Options: **Cylindrical:** Cylindrical latch with 3-hour UL/ULC fire rating on "A" labeled doors
Rim Exit Device: Compatible with most leading brands of Exit Devices (Exit Device and mounting hardware not included). Universal mounting plate (included) simplifies installation and eliminates any requirement to stock different locks/plates for various Exit Devices.
American Standard Mortise: With 1¼" (32 mm) face plate; with and without deadbolt

Exit Device Compatibility: **For the most accurate listing of compatible Exit Devices, visit http://kaba.to/Simplex5000**

Arrow S1250
Arrow S3883F/S3800
Black & Decker (K-2) QED111/112
Cal Royal 9800
Cal Royal 2200
Corbin Russwin ED5200/5200A
Detex 1001 BP1
Detex 10/F10 Series
Dorex 8500R/8500F
Dorex 9500PR/9500FR
Dorma 9300/F9300
Monarch 18R*, F18R*
Precision 21/FL21
Sargent 2828
Sargent 3828
Sargent 8810E/8800
Sargent 8888
Von Duprin 22/22F
Von Duprin 98/98F
Von Duprin 99/99F
Von Duprin XP98/99
Yale YME2100/2100
Yale 7100

*(requires special K-Hub Adapter, not supplied by Kaba)

- **Cannot be used with mortise design or vertical rod Exit Devices**

ATTENTION: Compatibility is subject to change if modifications are made by Exit Device manufacturers without Kaba's knowledge

Number of Codes: Single access code—one easy-to-manage code for all users

Programming: Lock is easily programmed via keypad without removing lock from the door

Features (continued)

Handing:	Non-handed, pre-assembled for left-hand door installations; easily changed in the field
Key Override:	Key-in-lever cylinders, small format interchangeable cores, and large format removable cores
Operation Modes:	Pushbutton Access Passage (select models)—allows access without using the lock entry code. Feature activated from the inside with a thumbturn or key (included with all passage feature models). Exit Trim may be "dogged" if Exit Device allows Lockout (select models)—disables the lock from the inside so that the entry code cannot be used to gain access. Access is permitted using the key override only when in this mode (5067 model only).
Direct Drive Design:	Clutch free design minimizes friction and wear
Economical:	A cost effective access control solution

Mechanical Features

Construction:	Extra heavy-duty, solid cast housings, solid cast; ADA-compliant levers, and wear tested for extensive use in indoor and outdoor applications
Numeric Keypad:	Vandal resistant, solid metal pushbuttons
Handing:	Non-handed, pre-assembled for left-hand door installations; easily changed in the field
Standard Finishes:	Satin Chrome 26D (626) housings and levers Black 676 housings with Satin Chrome 26D (626) levers and accents
Optional Finishes:	Bright Brass 03 (605) housings and levers Bright Chrome 026 (625) housings and levers Dark Bronze 744 housings and levers with Brass accents Satin Brass 04 (606) housings and levers
Backset:	**Cylindrical**: 2¾" (70 mm) backset, 2⅜" (60 mm) backset **Exit Device**: varies by Exit Device **Mortise**: 2¾" (70 mm) backset
Latch:	½" (13 mm) latch, ¾" (19 mm) latch (optional)
Exit Device:	Not supplied (see list on prior page for compatibility)
Exit Device Latch:	Supplied with Exit Device
Exit Device Hub Rotation:	Up to 60º
Minimum Stile Recommended:	5" (127 mm)
Weight:	Cylindrical: 9.25 lbs. (4.19 kg) Exit Device: 8 lbs. (3.63 kg) Mortise: 11 lbs. (4.98 kg)

Key Override

Universal Key-In-Lever

Kaba 1599 6-pin cylinder with two keys
Kaba 90 or Schlage "C" Keyway, keyed different
Includes four additional tailpieces for compatibility with:

Abloy 5277; 5477
Arrow C100
ASSA 65611; 65691
Corbin Russwin 2000-03
Kaba 1539; 1599
Kaba Gemini 4730
Kaba Peaks 1099

Marks
Medeco 20W200H1
Sargent 10 Line
Schlage 23-001
Schlage Primus 20-760

Australian:
Kaba experT 107K5
and Boyd KC286

European: Quattro
S/Expert and AP2
(5 and 6-pin)

Key Override (continued)

Interchangeable Cores:	Small format—Best and equivalents (6 or 7-pin length); core not included
Removable Cores:	Large format—Medeco/ASSA/Yale/Abloy (5 or 6-pin), Corbin Russwin (6 or 7-pin length), Schlage, and Sargent; core not included

Installation

Door Preparation:	Easily installs on wood or metal doors. ASA 161 door preparation with additional through holes.
Door Thickness:	**Cylindrical**: 1⅜" (35 mm) to 2¼" (57 mm). Pre-assembled to accommodate doors 1⅝" (41 mm) to 2" (51 mm). **Exit Trim and Mortise**: 1¾" (44 mm) to 2¼" (57 mm). Pre-assembled to accommodate doors 1¾" (44 mm) to 2⅛" (54 mm).
Items Supplied Include:	Lock assembly, installation manual, full scale template, and required installation hardware

Certification and Testing

Accessibility Standard:	Americans with Disabilities Act (ADA); ADA-compliant levers
Durability:	ANSI/BHMA Grade 1 Certified (A156.2, 156.13); D.O.D. Compliant 5220.22M for supplemental access control; weather resistant, wear tested for extensive use in indoor and outdoor applications
Fire Rating:	3-hour UL/ULC fire rating for "A" label doors and installed with an existing fire-rated exit device (where applicable)

Warranty

Warranty:	3-year warranty

Cylindrical

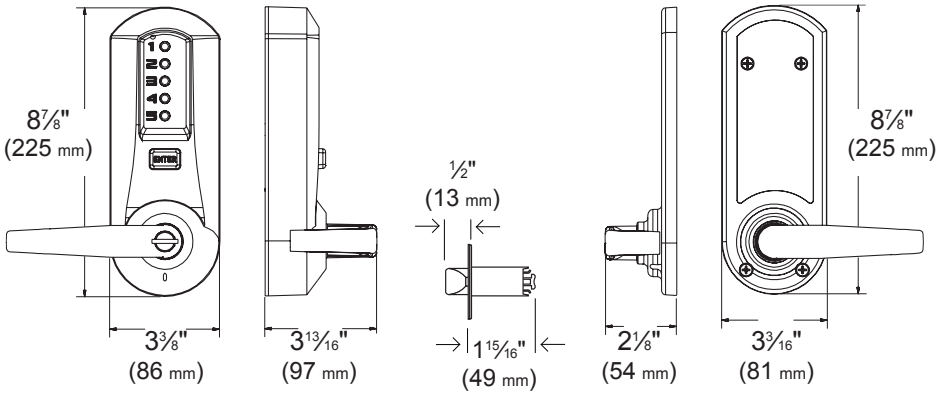

Model 502x

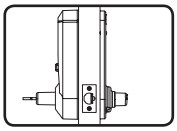

- Combination Entry
- Key Override
- Exterior Combination Change
- Knob Available

Model 503x

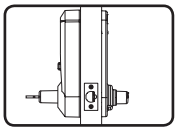

- Combination Entry
- Key Override
- Interior Combination Change, D.O.D. Compliant
- Knob Available

Model 504x

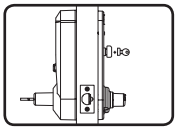

- Combination Entry
- Key Override
- Exterior Combination Change
- Passage
- Knob Available

Model 505x

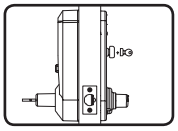

- Combination Entry
- Key Override
- Interior Combination Change, D.O.D. Compliant
- Passage
- Knob Available

Exit Trim

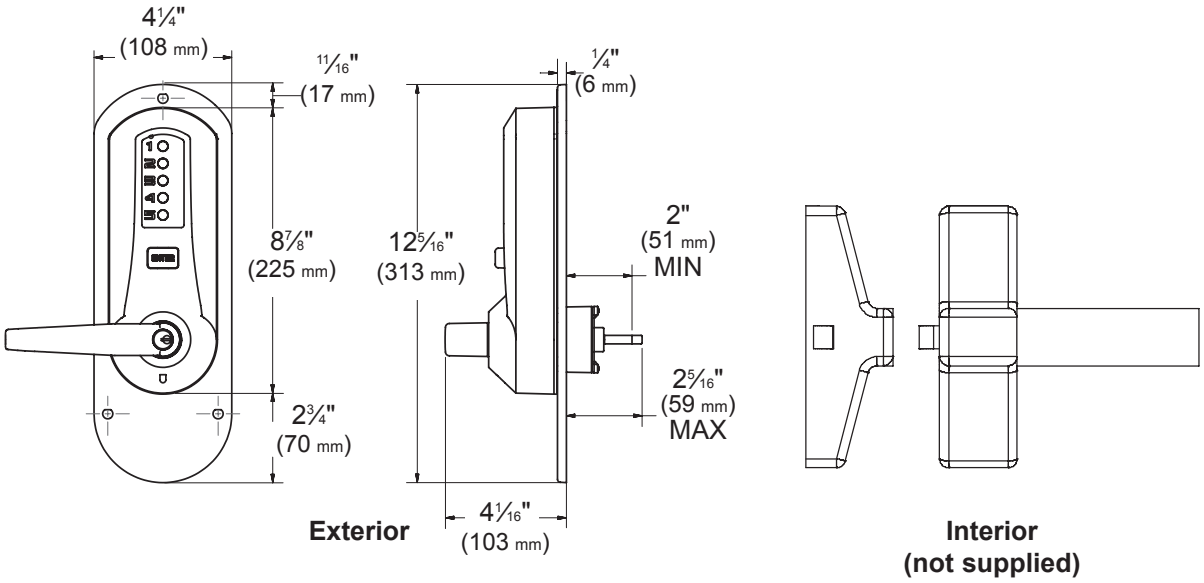

Model 5010

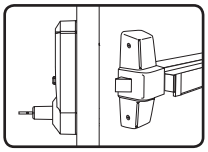

- Combination Entry
- Key Override
- Exterior Combination Change (only)
- Egress with Exit Device (not supplied)

Mortise

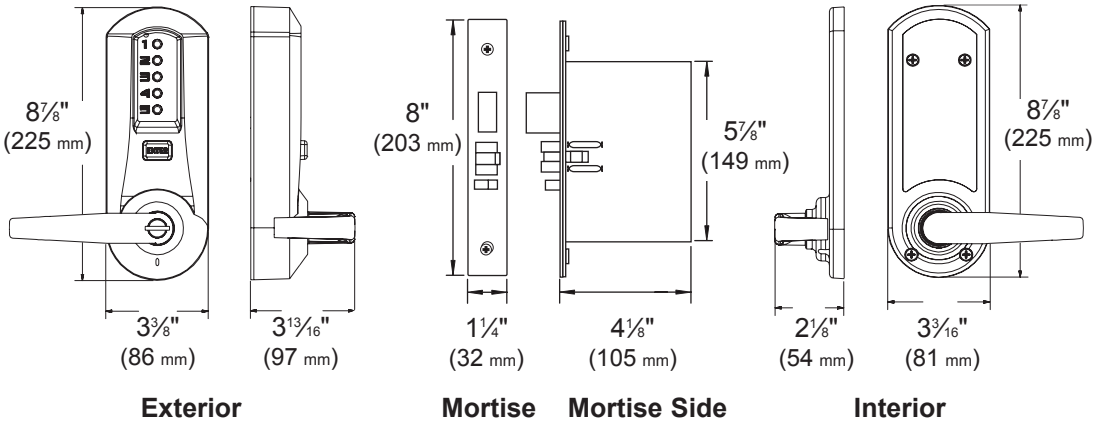

Model 5066

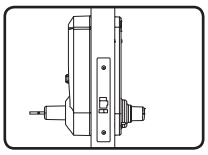

- Combination Entry
- Key Override
- Exterior Combination Change (only)

Model 5067

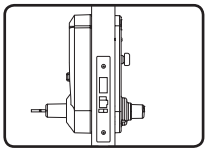

- Combination Entry
- Key Override
- Deadbolt
- Lockout
- Exterior Combination Change (only)

Model 5068

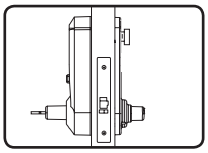

- Combination Entry
- Key Override
- Passage
- Exterior Combination Change (only)

KABA® BEYOND SECURITY

Simplex® 5000 Series

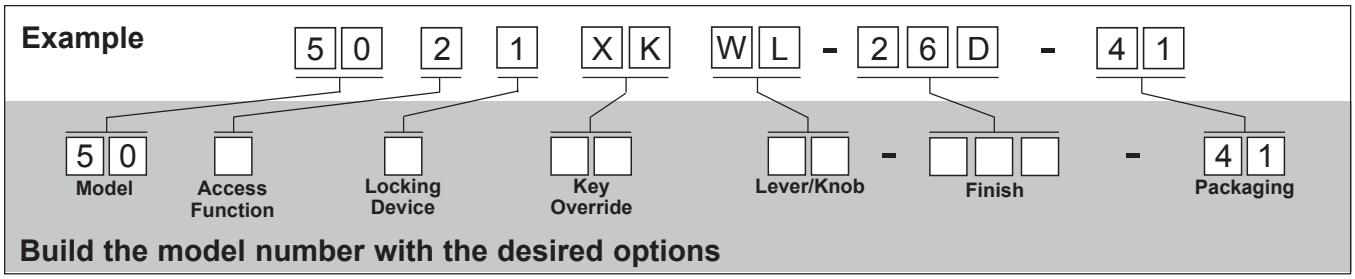

Base Model	Description	Base Price
5021XKWL26D41	Cylindrical Lock with Lever, Key-in-Lever Cylinder	$528.00

Choose One Option from Each Category

Function Options	Description	Price
1+	Exit Trim (E.T.) (available with lever only)	Add $100.00
2	Cylindrical Lock	No Charge
3	Cylindrical Lock, Interior Combination Change—D.O.D.	Add $50.00
4	Cylindrical Lock, Passage	Add $50.00
5	Cylindrical Lock, Passage, Interior Combination Change—D.O.D.	Add $100.00
6*	American Steel/Mortise (ASM) (available with lever only)	Add $120.00

Locking Device Options	Description	Price
0+	Exit Trim (available with E.T. only)	No Charge
1	Cylindrical ½" (13 mm) throw latch, floating face plate, 2¾" (70 mm) backset (UL listed)	No Charge
2	Cylindrical ½" (13 mm) throw latch, floating face plate, 2⅜" (60 mm) backset (UL listed)	No Charge
5	Cylindrical ¾" (19 mm) throw latch, beveled face plate, 2¾" (70 mm) backset (UL listed)	No Charge
6	Std Mortise, 1¼" (32 mm) face plate, no deadbolt (non-handed)	No Charge
7	Std Mortise, 1¼" (32 mm) face plate, with deadbolt and lockout (non-handed)	Add $30.00
8	Std Mortise, 1¼" (32 mm) face plate, no deadbolt with passage (non-handed)	Add $30.00

Key Override Options	Description	Price
XK	K-I-L Kaba Cylinder (Kaba 90 Keyway) included	No Charge
XS	K-I-L Kaba Cylinder (Schlage "C" Keyway) included	No Charge
B	I/C Best and Equivalents (6 or 7-pin length); core not included	No Charge
C	R/C Corbin Russwin (6 or 7-pin length); core not included	No Charge
M	R/C Medeco/ASSA/Yale/Abloy (5 or 6-pin length); core not included	No Charge
R	R/C Sargent; core not included	No Charge
S	R/C Schlage; core not included	No Charge

Lever/Knob Options	Description	Price
WL	Winston Lever	No Charge
WK	Winston Knob (cylindrical locks only)	No Charge

Finish Options	Description	Price
026	Bright Chrome (625)	Add $25.00
03	Bright Brass (605)	Add $25.00
04	Satin Brass (606)	Add $25.00
26D	Satin Chrome (626)	No Charge
676	Black with Satin Chrome Accents	No Charge
744	Oil-rubbed Bronze with Brass Accents (simulated 10B/613)	Add $100.00

Items Supplied with the Lock

- Installation Manual
- Full-Scale Template
- Required Installation Hardware
- Tailpiece for Specified Key Override

Notes

+ Exit Device Compatibility

For the most accurate listing of compatible Exit Devices, visit http://kaba.to/Simplex5000

Arrow S1250
Arrow S3883F/S3800
Black & Decker (K-2) QED111/112
Cal Royal 9800
Cal Royal 2200
Corbin Russwin ED5200/5200A
Detex 1001 BP1
Detex 10/F10 Series
Dorex 8500R/8500F
Dorex 9500PR/9500FR
Dorma 9300/F9300
Monarch 18R**, F18R**
Precision 21/FL21
Sargent 2828
Sargent 3828
Sargent 8810E/8800
Sargent 8888
Von Duprin 22/22F
Von Duprin 98/98F
Von Duprin 99/99F
Von Duprin XP98/99
Yale YME2100/2100
Yale 7100

**(requires special K-Hub Adapter, not supplied by Kaba)

- **Cannot be used with mortise design or vertical rod Exit Devices**

ATTENTION: Compatibility is subject to change if modifications are made by Exit Device manufacturers without Kaba's knowledge

Exit Device not included (sold separately)

*** For mortise applications where additional door support is needed, order a mortise stabilizer for a hollow metal door from the accessories section.**

KABA® BEYOND SECURITY

Simplex® 1000 Series

- **Mechanical Pushbutton Lock**
- **Single Access Code**
- **Cylindrical**
- **Knob**

Features

Access Control:	Mechanical pushbutton lock eliminates problems and costs associated with issuing, controlling, and collecting keys and cards. Provides exterior access by combination, while allowing free egress.
No Battery:	Fully mechanical lock eliminates the material and labor expense of battery replacements
Locking Device:	Cylindrical latch with 3-hour UL/ULC fire rating on "A" labeled doors
Number of Codes:	Single access code—one easy-to-manage code for all users
Programming:	Lock is easily programmed via keypad without removing lock from the door
Handing:	Factory-handed for left-hand doors; easily field reversible
Key Override (Optional):	Small format interchangeable cores, large format removable cores
Operation Modes:	Pushbutton Access Passage (select models)—allows access without using the lock entry code. Feature activated from the inside with a thumbturn or key (included with all passage feature models). Lockout (select models)—disables the lock from the inside so that the entry code cannot be used to gain access. Access is permitted using the key override only.
Economical:	A cost effective access control solution

Mechanical Features

Construction:	Heavy-duty cylindrical lock housing with cast front housing; unified trim plate; cast knobs
Numeric Keypad:	Vandal resistant, solid metal pushbuttons
Handing:	Factory-handed for left-hand doors; easily field reversible
Standard Finishes:	Satin Chrome 26D (626), Antique Brass 05 (609)
Optional Finishes:	Bright Brass 03 (605), Bright Chrome 026 (625)
Backset:	2¾" (70 mm), 2⅜" (60 mm)
Latch:	½" (13 mm) throw latch, ¾" (19 mm) throw latch (optional)
Minimum Stile Recommended:	5" (127 mm)
Weight:	7.25 lbs. (3.3 kg)
Strike:	Standard strike plate; ASA strike plate

Key Override

Interchangeable Cores:	Small format—Best and equivalents (6 or 7-pin length); core not included
Removable Cores:	Large format—Medeco/ASSA/Yale/Abloy (5 or 6-pin length), Corbin Russwin (6-pin length), Schlage, and Sargent; core not included

Installation

Door Preparation:	Easily installs on wood or metal doors. ASA 161 door preparation with additional through bore holes required.
Door Thickness:	1⅜" (35 mm) to 2¼" (57 mm)—Pre-assembled to accommodate 1⅝" (41 mm) to 2" (51 mm)
Items Supplied Include:	Lock assembly, installation manual, full-scale template, combination change plug and access key, and required installation hardware

Certification and Testing

Durability:	D.O.D. Compliant 5220.22M for supplemental access control; weather resistant
Fire Rating:	3-hour UL/ULC fire rating for "A" labeled doors

Warranty

Warranty:	3-year warranty

Cylindrical

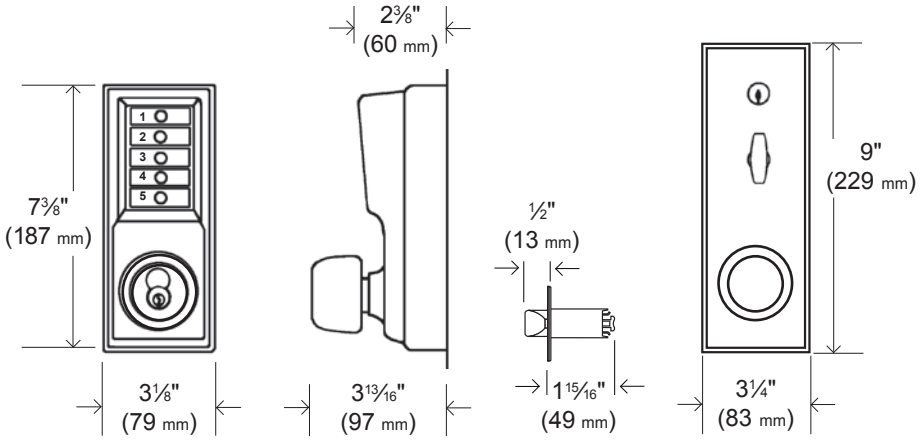

Exterior **Exterior Side** **Latch** **Interior**

Model 101x

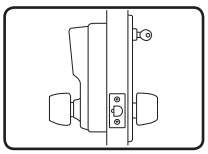

- Combination Entry
- Interior Combination Change

Model 102x

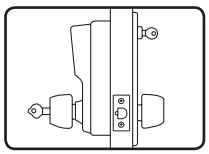

- Combination Entry
- Key Override (not supplied)
- Interior Combination Change

Model 103x

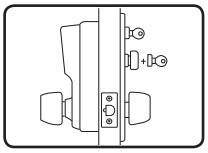

- Combination Entry
- Interior Combination Change
- Passage

Model 104x

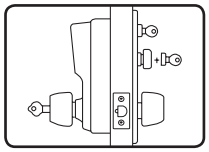

- Combination Entry
- Key Override (not supplied)
- Passage
- Interior Combination Change

Lockout Models

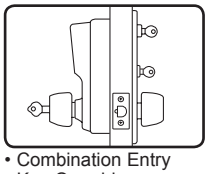

- Combination Entry
- Key Override (not supplied)
- Interior Combination Change
- Lockout from Inside Trim

KABA® BEYOND SECURITY

Simplex® 1000 Series

Example 1 0 1 1 ☐ - 2 6 D - 4 1 - ☐☐

1 0	☐	☐	☐	-	☐☐☐	-	4 1	-	L O
Model	Function	Locking Device	Key Override		Finish		Packaging		Lockout Option

Build the model number with the desired options

Base Model	Description	Base Price
101126D41	Cylindrical Lock with Knob, No Key Override	$450.50

Choose One Option from Each Category

Function Options	Description	Price
1	Cylindrical Lock, Combination Entry Only	No Charge
2	Cylindrical Lock, Combination Entry, and Key Override	Add $70.00
3	Cylindrical Lock, Combination Entry, and Passage	Add $50.00
4	Cylindrical Lock, Combination Entry, Key Override, and Passage	Add $120.00

Locking Device Options	Description	Price
1	Cylindrical ½" (13 mm) throw latch, floating face plate 2¾" (70 mm) backset (UL listed)	No Charge
2	Cylindrical ½" (13 mm) throw latch, floating face plate 2⅜" (60 mm) backset (UL listed)	No Charge
5	Cylindrical ¾" (19 mm) throw latch, beveled face plate 2¾" (70 mm) backset (UL listed)	No Charge

Key Override Options	Description	Price
B	I/C Best and Equivalents (6 or 7-pin length); core not included	No Charge
C	R/C Corbin Russwin (6-pin length); core not included	No Charge
M+	R/C Medeco/ASSA/Yale/Abloy (5 or 6-pin length); core not included	No Charge
R	R/C Sargent; core not included	No Charge
S	R/C Schlage; core not included	No Charge

Finish Options	Description	Price
026	Bright Chrome (625)	Add $25.00
03	Bright Brass (605)	Add $25.00
05	Antique Brass (609)	No Charge
26D	Satin Chrome (626)	No Charge

Lockout Option++	Description	Price
LO	Lockout (available on key override models only)	Add $100.00

Items Supplied with the Lock

- Installation Manual
- Full-Scale Template
- Required Installation Hardware

Notes

+ Medeco/ASSA/Yale/Abloy (5 and 6-pin length)
5 and 6-pin Medeco/ASSA/Abloy cylinders require a special knob spacer (included in package)

++ Lockout Option
This field can be left blank if no optional features are required

Knob locks are factory-handed for left-hand operation unless otherwise pre-arranged with manufacturing facility (minimum quantity required)

KABA BEYOND SECURITY

Simplex®
L1000 Series

- **Mechanical Pushbutton Lock**
- **Single Access Code**
- **Cylindrical**
- **Lever**

Features

Access Control:	Mechanical pushbutton lock eliminates problems and costs associated with issuing, controlling, and collecting keys and cards. Provides exterior access by combination, while allowing free egress.
No Battery:	Fully mechanical lock eliminates the material and labor expense of battery replacements
Locking Device:	Cylindrical latch with 3-hour UL/ULC fire rating on "A" labeled doors
Number of Codes:	Single access code—one easy-to-manage code for all users
Programming:	Lock is easily programmed via keypad without removing lock from the door
Handing:	Factory-handed; not field reversible
Key Override (Optional):	Small format interchangeable cores, large format removable cores
Operation Modes:	Pushbutton Access Passage (select models)—allows access without using the lock entry code. Feature activated from the inside with a thumbturn or key (included with all passage feature models). Privacy (select models)—disables the lock from the inside so that the entry code cannot be used to gain access. Access is permitted using the key override only when in this mode.
Economical:	A cost effective access control solution

Mechanical Features

Construction:	Heavy-duty cylindrical lock housing with cast front housing, unified trim plate, and fixed ADA-compliant levers
Numeric Keypad:	Vandal resistant, solid metal pushbuttons
Handing:	Factory-handed; not field reversible
Standard Finishes:	Satin Chrome 26D (626), Antique Brass 05 (609)
Optional Finishes:	Bright Brass 03 (605), Bright Chrome 026 (625)
Backset:	2¾" (70 mm), 2⅜" (60 mm)
Latch:	½" (13 mm) throw latch, ¾" (19 mm) throw latch (optional)
Minimum Stile Recommended:	5" (127 mm)
Weight:	8.25 lbs. (3.7 kg)
Strike:	Standard strike plate; ASA strike plate

Key Override

Interchangeable Cores:	Small format—Best and equivalents (6 or 7-pin length); core not included
Removable Cores:	Large format—Medeco/ASSA/Yale/Abloy (5 or 6-pin length); Corbin Russwin (6-pin length); Schlage, and Sargent; core not included

Installation

Door Preparation:	Easily installs on wood or metal doors. ASA 161 door preparation with additional through holes.
Door Thickness:	1⅜" (35 mm) to 2¼" (57 mm)—Pre-assembled to accommodate 1⅝" (41 mm) to 2" (51 mm) doors
Items Supplied Include:	Lock assembly, installation manual, full-scale template, combination change plug and access key, and required installation hardware

Certification and Testing

Accessibility Standard:	Americans with Disabilities Act (ADA); fixed ADA-compliant levers
Durability:	D.O.D. Compliant 5220.22M for supplemental access control; weather resistant
Fire Rating:	3-hour UL/ULC fire rating for "A" labeled doors

Warranty

Warranty:	3-year warranty

Cylindrical

Door handing must be specified when ordering.

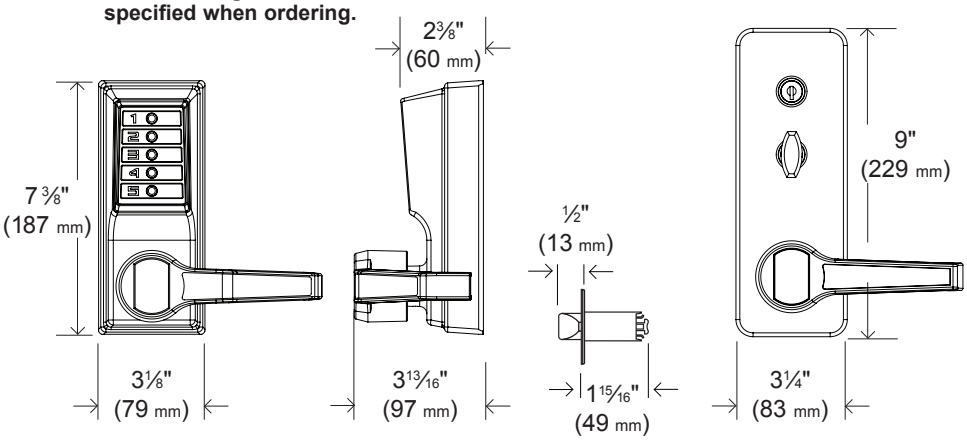

Exterior **Exterior Side** **Latch** **Interior**

Model L101x

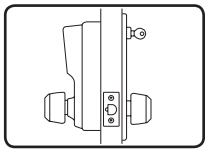

- Combination Entry
- Interior Combination Change

Model L102x

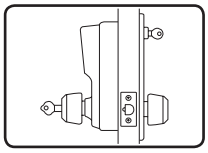

- Combination Entry
- Key Override (not supplied)
- Interior Combination Change

Model L103x

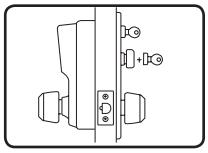

- Combination Entry
- Interior Combination Change
- Passage

Model L104x

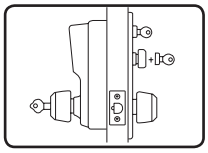

- Combination Entry
- Key Override (not supplied)
- Interior Combination Change
- Passage

Model L1076

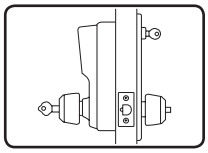

- Combination Entry
- Key Override (not supplied)
- Interior Combination Change
- Privacy (lockout) available on key override models only

KABA BEYOND SECURITY

Simplex®
L1000 Series

Example L L 1 0 1 1 ☐ - 2 6 D - 4 1

L	☐	1 0	☐	☐	☐	-	☐ ☐ ☐	-	4 1
Handing		Model	Function	Locking Device	Key Override		Finish		Packaging

Build the model number with the desired options

Base Model	Description	Base Price
LL101126D41	Cylindrical Lock with Lever, No Key Override	$540.50

Choose One Option from Each Category

Handing Options	Description	Price
L	Left Hand or Left Hand Reverse	No Charge
R	Right Hand or Right Hand Reverse	No Charge

Function Options	Description	Price
1	Cylindrical Lock, Combination Entry Only	No Charge
2	Cylindrical Lock, Combination Entry, and Key Override	Add $70.00
3	Cylindrical Lock, Combination Entry, and Passage	Add $50.00
4	Cylindrical Lock, Combination Entry, Key Override, and Passage	Add $120.00
7	Cylindrical Lock, Combination Entry, Key Override, and Privacy (lockout) (requires “6” Locking Device Option) 1¾" (44 mm) door thickness only	Add $90.00

Locking Device Options	Description	Price
1	Cylindrical ½" (13 mm) throw latch, floating face plate 2¾" (70 mm) backset (UL listed)	No Charge
2	Cylindrical ½" (13 mm) throw latch, floating face plate 2⅜" (60 mm) backset (UL listed)	No Charge
5	Cylindrical ¾" (19 mm) throw latch, beveled face plate 2¾" (70 mm) backset (UL listed)	No Charge
6	Cylindrical ¾" (19 mm) throw latch, beveled face plate—(for 1076 only) 2¾" (70 mm) backset (UL listed) 1¾" (44 mm) door thickness only	No Charge

Key Override Options	Description	Price
B	I/C Best and Equivalents (6 or 7-pin length); core not included	No Charge
C	R/C Corbin Russwin (6-pin length); core not included	No Charge
M+	R/C Medeco/ASSA/Yale/Abloy (5 or 6-pin length); core not included	No Charge
R	R/C Sargent; core not included	No Charge
S	R/C Schlage; core not included	No Charge

Finish Options	Description	Price
026	Bright Chrome (625)	Add $25.00
03	Bright Brass (605)	Add $25.00
05	Antique Brass (609)	No Charge
26D	Satin Chrome (626)	No Charge

Items Supplied with the Lock

- Installation Manual
- Full-Scale Template
- Required Installation Hardware

Notes

+ **Medeco/ASSA/Yale/Abloy (5 and 6-pin length)**
5 and 6-pin Medeco/ASSA/Abloy cylinders require a special knob spacer (included in package)

Privacy option is available on key override models only. Fits 1¾" (44 mm) doors only

KABA BEYOND SECURITY

Simplex®
EE1000 Series

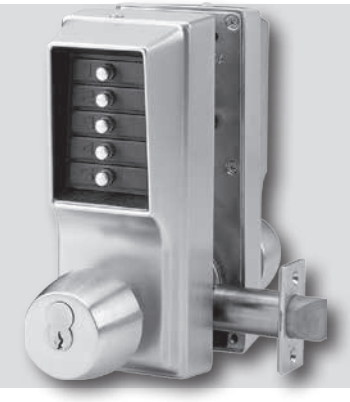

- **Mechanical Pushbutton Lock**
- **Control Both Entry and Egress**
- **Single Access Code**
- **Cylindrical**
- **Knob**

Features

Access Control:	Mechanical pushbutton lock eliminates problems and costs associated with issuing, controlling, and collecting keys and cards. Provides interior and exterior access by combination.
No Battery:	Fully mechanical lock eliminates the material and labor expense of battery replacements
Locking Device:	Cylindrical latch with 3-hour UL/ULC fire rating on "A" labeled doors
Number of Codes:	Single access code—one easy-to-manage code for all users
Programming:	Lock is easily programmed via keypad without removing lock from the door
Handing:	Factory-handed for left-hand doors; field reversible
Key Override (Optional):	Small format interchangeable cores, large format removable cores
Operation Modes:	Pushbutton entry Pushbutton egress
Economical:	A cost effective access control solution

Mechanical Features

Construction:	Heavy-duty cylindrical lock with cast front and back housings; cast knobs
Numeric Keypad:	Vandal resistant, solid metal pushbuttons
Door Handing:	Factory-handed for left-hand doors; easily field reversible
Standard Finishes:	Antique Brass 05 (609), Satin Chrome 26D (626)
Optional Finishes:	Bright Chrome 026 (625), Bright Brass 03 (605)
Backset:	2¾" (70 mm)
Latch:	½" (13 mm) throw latch, ¾" (19 mm) throw latch (optional)
Strike:	Standard strike plate; ASA strike plate
Minimum Stile Recommended:	5" (127 mm)
Weight:	10.25 lbs. (4.6 kg)

Key Override

Interchangeable Cores:	Small format—Best and equivalents (6 or 7-pin length); core not included
Removable Cores:	Large format—Medeco/ASSA/Yale/Abloy (5 or 6-pin length); Corbin Russwin (6-pin length); Schlage, and Sargent; core not included

Installation

Door Preparation:	ASA 161-door preparation with additional through bore holes
Door Thickness:	1¾" (44 mm) to 2¼" (57 mm); modified lock for more than 2" (51) thick door (up to 2¼") available (specify when ordering)
Items Supplied Include:	Lock assembly, installation manual, full-scale template, combination change tool, and required installation hardware

Certification and Testing

Durability:	Weather resistant
Fire Rating:	3-hour UL/ULC fire rating for "A" labeled doors

Warranty

Warranty:	1-year warranty

Cylindrical

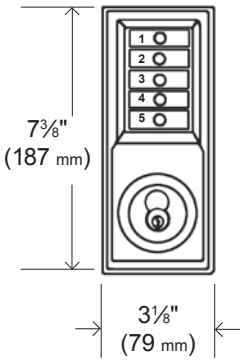

Exterior

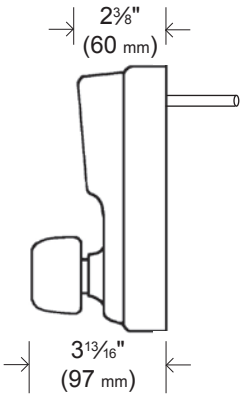

Exterior Side

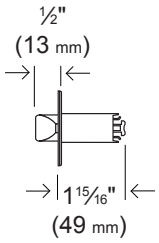

Latch

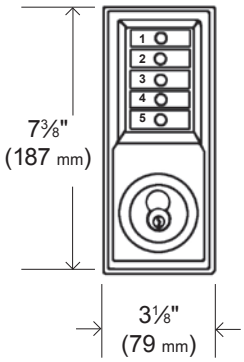

Interior

Model 101x/101x

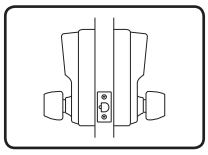

- Combination Entry
- Combination Egress

Model 102x/101x

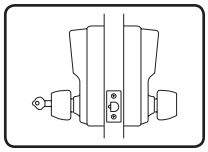

- Combination Entry
- Combination Egress
- Key Override Entry (not supplied)

Model 102x/102x

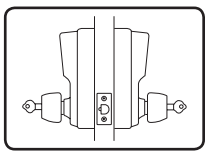

- Combination Entry
- Combination Egress
- Key Override Entry (not supplied)
- Key Override Egress (not supplied)

KABA BEYOND SECURITY

Simplex® EE1000 Series

Example

E E 1 0 1 1 ☐ / E E 1 0 1 1 ☐ - 2 6 D - 4 1

E E 1 0	☐	☐	☐ /	E E 1 0	☐	☐	☐ -	☐ ☐ ☐ -	4 1
Model	Access Function	Locking Device	Key Override	Model	Egress Function	Locking Device	Key Override	Finish	Packaging

Build the model number with the desired options

Base Model	Description	Base Price
1011/101126D41	Cylindrical Lock with Knobs, Entry/Egress (Back-to-Back), No Key Override	$975.00

Choose One Option from Each Category

Access Function Options	Description	Price
1	Cylindrical Lock, Combination Entry Only	No Charge
2	Cylindrical Lock, Combination Entry, and Key Override	Add $70.00

Locking Device Options	Description	Price
1	Cylindrical ½" (13 mm) throw latch, floating face plate 2¾" (70 mm) backset (UL listed)	No Charge
5	Cylindrical ¾" (19 mm) throw latch, beveled face plate 2¾" (70 mm) backset (UL listed)	No Charge

Key Override Options	Description	Price
B	I/C Best and Equivalents (6 or 7-pin length); core not included	No Charge
C	R/C Corbin Russwin (6-pin length); core not included	No Charge
M+	R/C Medeco/ASSA/Yale/Abloy (5 or 6-pin length); core not included	No Charge
R	R/C Sargent; core not included	No Charge
S	R/C Schlage; core not included	No Charge

Egress Function Options	Description	Price
1	Cylindrical Lock, Combination Entry Only	No Charge
2	Cylindrical Lock, Combination Entry, and Key Override	Add $70.00

Locking Device Options	Description	Price
1	Cylindrical ½" (13 mm) throw latch, floating face plate 2¾" (70 mm) backset (UL listed)	No Charge
5	Cylindrical ¾" (19 mm) throw latch, beveled face plate 2¾" (70 mm) backset (UL listed)	No Charge

Key Override Options	Description	Price
B	I/C Best and Equivalents (6 or 7-pin length); core not included	No Charge
C	R/C Corbin Russwin (6-pin length); core not included	No Charge
M+	R/C Medeco/ASSA/Yale/Abloy (5 or 6-pin length); core not included	No Charge
R	R/C Sargent; core not included	No Charge
S	R/C Schlage; core not included	No Charge

Finish Options	Description	Price
026	Bright Chrome (625)	Add $50.00
03	Bright Brass (605)	Add $50.00
05	Antique Brass (609)	No Charge
26D	Satin Chrome (626)	No Charge

Items Supplied with the Lock

- Installation Manual
- Full-Scale Template
- Required Installation Hardware

Notes

+ **Medeco/ASSA/Yale/Abloy (5 and 6-pin length)**
5 and 6-pin Medeco/ASSA/Abloy cylinders require a special knob spacer (included in package)

- **Mechanical Pushbutton Lock**
- **Single Access Code**
- **Mortise**
- **Lever**

Features

Access Control:	Mechanical pushbutton lock eliminates problems and costs associated with issuing, controlling, and collecting keys and cards. Provides exterior access by combination, while allowing free egress.
No Battery:	Fully mechanical lock eliminates the material and labor expense of battery replacements
Locking Device Options:	Mortise with 1" (25 mm) deadbolt, ¾" (19 mm) two-piece anti-friction latch Mortise with ¾" (19 mm) two-piece anti-friction latch
Number of Codes:	Single access code—one easy-to-manage code for all users
Programming:	Lock is easily programmed via keypad without removing lock from the door
Handing:	Factory-handed; not field reversible
Key Override (Optional):	Small format interchangeable cores, large format removable cores
Operation Modes:	Pushbutton Access Passage (select models)—allows access without using the lock entry code. Feature activated from the inside with a thumbturn or key (included with all passage feature models). Deadbolt (select models)—added security of 1" deadbolt. Access permitted by combination or key override. Lockout (all models)—disables the lock from the inside so that the entry codes cannot be used to gain access. Access is permitted using key override.
Economical:	A cost effective access control solution

Mechanical Features

Construction:	Cast front housing; unified trim plate; fixed ADA—compliant levers
Numeric Keypad:	Vandal resistant, solid metal pushbuttons
Handing:	Factory-handed; not field reversible
Standard Finishes:	Antique Brass 05 (609), Satin Chrome 26D (626)
Optional Finishes:	Bright Chrome 026 (625), Bright Brass 03 (605)
Backset:	2¾" (70 mm)
Latch:	¾" (19 mm) two-piece anti-friction latch; 1" (25 mm) optional deadbolt
Minimum Stile Recommended:	5" (127 mm)
Weight:	9.8 lbs. (3.7 kg)
Strike:	4⅞" (124 mm) L x 1¼" (32 mm) W x ¼" (6 mm) D Deadbolt/Latch mortise strike plate

Key Override

Interchangeable Cores:	Small format—Best and equivalents (6 or 7-pin length); core not included
Removable Cores:	Large format—Medeco/ASSA/Yale/Abloy (5 or 6-pin length), Corbin Russwin (6-pin length), Schlage, and Sargent; core not included

Installation

Door Preparation:	Easily installs on wood or metal doors. Standard (86) mortise preparation
Door Thickness:	1¾" (44 mm) to 2¼" (57 mm)
Items Supplied Include:	Lock assembly, installation manual, full-scale template, combination change tool, and required installation hardware

Certification and Testing

Accessibility Standard:	Americans with Disabilities Act (ADA); fixed ADA-compliant levers
Durability:	Weather resistant
Fire Rating:	3-hour UL/ULC fire rating for "A" labeled doors

Warranty

Warranty:	3-year warranty

Mortise

Door handing must be specified when ordering.

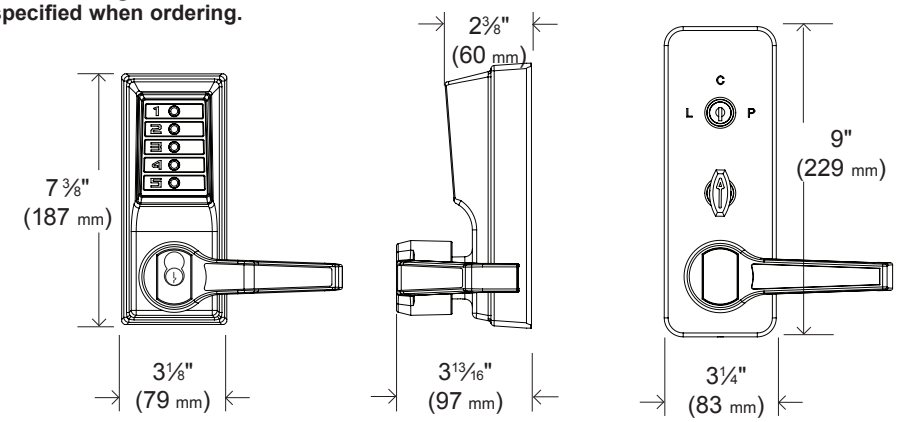

Exterior **Exterior Side** **Interior**

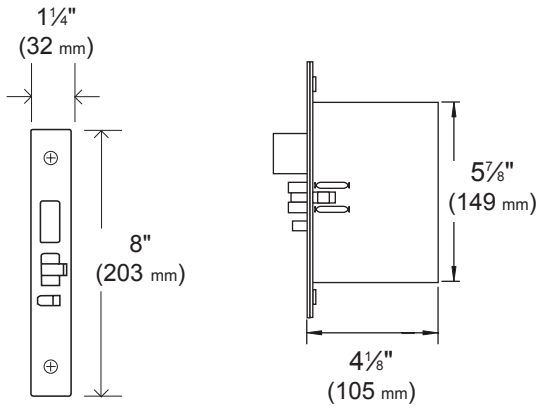

Mortise **Mortise Side**

Model 8146

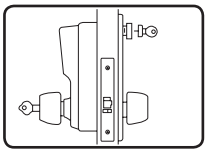

- Combination Entry
- Key Override (not supplied)
- Passage
- Lockout

Model 8148

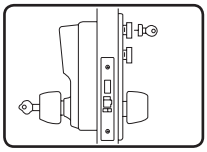

- Combination Entry
- Key Override (not supplied)
- Passage
- Lockout
- Deadbolt

KABA BEYOND SECURITY

Simplex® 8100 Series

Example L R 8 1 4 6 B - 2 6 D - 4 1

Handing	Model	Function	Key Override		Finish		Packaging
L R	8 1 4	6	B	-	2 6 D	-	4 1

Build the model number with the desired options

Base Model	Description	Base Price
LR8146B26D41	Mortise Lock with Lever, Key Override, Passage, Lockout	$694.50

Choose One Option from Each Category

Handing Options	Description	Price
L	Left Hand	No Charge
LR	Left Hand Reverse	No Charge
R	Right Hand	No Charge
RR	Right Hand Reverse	No Charge

Function Options	Description	Price
6	Combination Entry, Key Override, Passage, Lockout	No Charge
8	Combination Entry, Key Override, Passage, Lockout, Deadbolt	Add $30.00

Key Override Options	Description	Price
B	I/C Best and Equivalents (6 or 7-pin length); core not included	No Charge
C	R/C Corbin Russwin (6-pin length); core not included	No Charge
M+	R/C Medeco/ASSA/Yale/Abloy (5 or 6-pin length); core not included	No Charge
R	R/C Sargent; core not included	No Charge
S	R/C Schlage; core not included	No Charge

Finish Options	Description	Price
026	Bright Chrome (625)	Add $25.00
03	Bright Brass (605)	Add $25.00
05	Antique Brass (609)	No Charge
26D	Satin Chrome (626)	No Charge

Items Supplied with the Lock

- Installation Manual
- Full-Scale Template
- Required Installation Hardware

Notes

+Medeco/ASSA/Yale/Abloy (5 and 6-pin length)
5 and 6-pin Medeco/ASSA/Abloy cylinders require a special knob spacer (included in package)

Simplex®
LP1000 Series

BEYOND SECURITY KABA®

- **Mechanical Pushbutton Lock**
- **Single Access Code**
- **Exit Trim**
- **Lever**

Features

Access Control: Mechanical pushbutton lock eliminates problems and costs associated with issuing, controlling, and collecting keys and cards. Provides exterior access by combination, while allowing free egress with Exit Device (not supplied).

No Battery: Fully mechanical lock eliminates the material and labor expense of battery replacements

Locking Device Options: Rim Exit Device: Compatible with most leading brands of Exit Devices—see list below (Exit Device and mounting hardware not included)

Exit Device Compatibility:

For the most accurate listing of compatible Exit Devices, visit http://kaba.to/SimplexLP1000

Black & Decker (K-12) QED111/112
Cal Royal 5000/F5000
Detex Advantex Series 10, 20, 21,40, 50, 51
Detex 10/F10 Series
Dorex 8500R/8500F
Dorex 9500PR/9500FR
Dorma 9100, 9300
Monarch XX-R*, FXX-R, 18-R*, F-18-R*, 17-R, F-17-R, XX-V*, F-XX-V*, 18-V*, F-18-V*, F-XX-V*, 11-R*, 11-V*
Von Duprin 22, 88 NL, 98, 99

*(requires special K-Hub Adapter Kit, not supplied by Kaba)

- **Cannot be used with mortise design or vertical rod Exit Devices**

ATTENTION: Compatibility is subject to change if modifications are made by Exit Device manufacturers without Kaba's knowledge

Number of Codes: Single access code—one easy-to-manage code for all users

Handing: Factory-handed; not field reversible

Key Override (Optional): Small format interchangeable cores, large format removable cores

Operation Modes: Pushbutton Access
Exit Device may be "dogged" without affecting the LP1000

Economical: A cost effective access control solution

Mechanical Features

Construction: Heavy-duty cast front housing; heavy-duty mounting plate; fixed ADA-compliant lever

Numeric Keypad: Vandal resistant, solid metal pushbuttons

Handing: Factory-handed; not field reversible

Standard Finishes: Antique Brass 05 (609), Satin Chrome 26D (626)

Optional Finishes: Bright Chrome 026 (625), Bright Brass 03 (605)

Mechanical Features (continued)

Exit Device:	Not supplied (see list for compatibility on prior page)
Exit Device Strike:	Supplied with Exit Device
Exit Device Hub Rotation:	Up to 60°, counterclockwise for left hand and clockwise for right hand
Tailpiece:	2¾" (70 mm) tailpiece for Exit Device operation from outside Optional 5" (125 mm) tailpiece for freezer doors (sold separately, part # 74773-000-01)
Minimum Stile Recommended:	5" (127 mm)
Weight:	8 lbs. (3.6 kg)

Key Override

Interchangeable Cores:	Small format—Best and equivalents (6 or 7-pin length); core not included
Removable Cores:	Large format—Medeco/ASSA/Yale/Abloy (5 or 6-pin length), Corbin Russwin (6-pin length), Schlage, and Sargent; core not included

Installation

Door Preparation:	Recessed through bolts may be required for Exit Device preparation
Door Thickness:	1⅜" (35 mm) to 2¼" (57 mm) Optional 5" (127 mm) tailpiece (sold separately, part # 74773-000-01)
Items Supplied Include:	Installation manual, full-scale template, combination change tool, and required lock installation hardware only

Certification and Testing

Accessibility Standard:	Americans with Disabilities Act (ADA); fixed ADA-compliant lever
Durability:	Weather resistant
Fire Rating:	3-hour UL/ULC fire rating for "A" labeled doors

Warranty

Warranty:	3-year warranty

Exit Trim

Door handing must be specified when ordering.

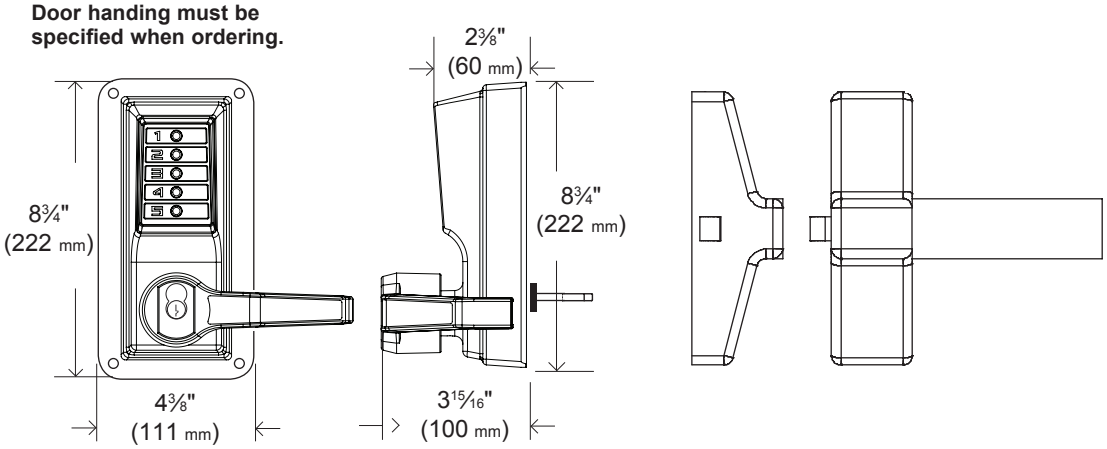

Exterior **Exterior Side** **Interior** (not supplied)

LP1010

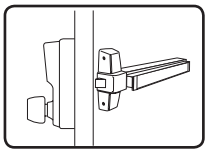

- Combination Entry
- Egress with Exit Device (not supplied)
- Exterior Combination Change (only)

LP1020

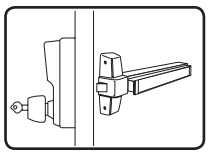

- Combination Entry
- Egress with Exit Device (not supplied)
- Key Override (not supplied)
- Exterior Combination Change (only)

Simplex®
LP1000 Series

BEYOND SECURITY KABA®

Example L L P 1 0 1 0 ☐ - 2 6 D - 4 1

L	☐	P 1 0	☐☐	☐	-	☐☐☐	-	4 1
Model	Handing	Model	Function	Key Override		Finish		Packaging

Build the model number with the desired options

Base Model	Description	Base Price
LLP101026D41+	Exit Trim Lock with Lever, No Key Override	$609.50

Choose One Option from Each Category

Handing Options	Description	Price
L	Left Hand or Left Hand Reverse	No Charge
R	Right Hand or Right Hand Reverse	No Charge

Function Options	Description	Price
10	Combination Entry Only	No Charge
20	Combination Entry and Key Override	Add $70.00

Key Override Options	Description	Price
B	I/C Best and Equivalents (6 or 7-pin length); core not included	No Charge
C	R/C Corbin Russwin (6-pin length); core not included	No Charge
M++	R/C Medeco/ASSA/Yale/Abloy (5 or 6-pin length); core not included	No Charge
R	R/C Sargent; core not included	No Charge
S	R/C Schlage; core not included	No Charge

Finish Options	Description	Price
026	Bright Chrome (625)	Add $25.00
03	Bright Brass (605)	Add $25.00
05	Antique Brass (609)	No Charge
26D	Satin Chrome (626)	No Charge

Items Supplied with the Lock

- Installation Manual
- Full-Scale Template
- Required Installation Hardware

Notes

+ Exit Device Compatibility: for the most accurate listing of compatible Exit Devices, vist http://kaba.to/SimplexLP1000

Black & Decker (K-12) QED111/112
Cal Royal 5000/F5000
Detex Advantex Series 10, 20, 21, 40, 50, 51
Detex 10/F10 Series
Dorex 8500R/8500F
Dorex 9500PR/9500FR
Dorma 9100, 9300
Monarch XX-R*, FXX-R, 18-R*, F-18-R*, 17-R, F-17-R, XX-V*, F-XX-V*, 18-V*, F-18-V*, F-XX-V*, 11-R*, 11-V*
Von Duprin 22, 88 NL, 98, 99

*(requires special K-Hub Adapter Kit, not supplied by Kaba)

Exit Device not included (sold separately)

ATTENTION: Compatibility is subject to change if modifications are made by Exit Device manufacturers without Kaba's knowledge

++ Medeco/ASSA/Yale/Abloy (5 and 6-pin length)
5 and 6-pin Medeco/ASSA/Abloy cylinders require a special knob spacer (included in package)

- **Mechanical Pushbutton Lock**
- **Single Access Code**
- **Exit Trim**
- **Thumbturn**

Features

Access Control: Mechanical pushbutton lock eliminates problems and costs associated with issuing, controlling, and collecting keys and cards. Provides exterior access by combination, while allowing free egress at all times by interior Exit Device (not supplied).

No Battery: Fully mechanical lock eliminates the material and labor expense of battery replacements

Locking Device Options: Rim Exit Device: Compatible with most leading brands of Exit Devices (Exit Device and mounting hardware not included)

Exit Device Compatibility:

For the most accurate listing of compatible Exit Devices, visit http://kaba.to/Simplex2015

American Device 6300 Series, 6303 Series

Corbin 21, 22, 25, 26NT, 27K, 29, 29-1/4, 29M2, 29-1/2M2, 29NTM2, 29D20, LA29, 39, 39EL, 39LLD, 390, LA39

Detex Advantex Series 10, 20, 21, 40, 50, 51

Dorex 8500R/8500F

Dorex 9500R/9500FR

Magno Krom LHR only: 500-4, 550-4, 650-4, 1500-4, 1550-4, 1650-4; RHR only: 600-3

Monarch 18RBA, 18RP, 18VP, F18RBA, F18RP, F18VP, FXXRBA, FXXRP, FXXVP, XXRBA, XXRP, XXVP

Precision Hardware FL-D103; RHRB only 810-H; RH or LH: 103, R103, D203, H-203, 1103, D1203, H1203

Russwin 365, 3651/4, LT365, 370, 372, LA372, 375, LT375, 377, 382, 384, 385, 388, 572, 572EL, 572ELD, U572, LA572

Sargent 2813, 2804, 6804, 12-6804, 9804RHRB, 12-9804LHRB, 9898E, 9898K

Von Duprin 22 Rim, 22 Rim-F, 88 Rim, 88 Rim-F, 98 Rim, 98 Rim-F, 99 Rim, 99 Rim-F; 2227, 2227-F, 9827, 9827-F, 9847, 9847-F, 9927-F, 9947-F

Yale 1500 Series, 7000 Series

- **Cannot be used with surface-mounted Exit Devices with counterclockwise rotating hubs, thumb-operated Mortise design Exit Devices, or vertical rod Exit Devices**

ATTENTION: Compatibility is subject to change if modifications are made by Exit Device manufacturers without Kaba's knowledge

Number of Codes: Single access code—one easy-to-manage code for all users

Programming: Lock is easily programmed via keypad without removing lock from the door

Handing: For non-handed or clockwise-rotating (adjustable up to 90°) Exit Device hubs only

Operation Modes: Pushbutton Access
Exit Device may be "dogged" without affecting the 2015

Economical: A cost effective access control solution

Tailpiece: 2¾" (70 mm) adjustable tailpiece for Exit Device operation from outside;
Optional 5" (127 mm) tailpiece available (sold separately; part # 74773-000-001)

Exit Device Hub Rotation: Adjustable up to 90° clockwise for right hand (adjustable cam)

Mechanical Features

Construction:	Heavy-duty, cast front housing
Numeric Keypad:	Vandal resistant, solid metal pushbuttons
Handing:	For non-handed or clockwise-rotating (adjustable up to 90°) Exit Device hubs only
Finish:	Satin Chrome 26D (626)
Control:	6-pin tumbler cylinder keys for combination change access; can be keyed alike or master keyed, specify at time of order
Latch:	Not supplied (see compatibility list on previous page)
Strike:	Not supplied (supplied with Exit Device)
Minimum Stile Recommended:	3⅛" (79 mm)
Weight:	3.5 lbs. (1.6 kg)

Installation

Door Preparation:	Exit Device preparation may require recessed through bolting; 2015 installation is based on centerline of mating Exit Device hub
Door Thickness:	1⅜" (35 mm) to 2½" (64 mm); optional 5" (127 mm) tailpiece (purchased separately)
Items Supplied Include:	Installation manual, full-scale template, combination change keys, and required lock installation hardware only

Certification and Testing

Durability:	Weather resistant

Warranty

Warranty:	1-year warranty

Exit Trim

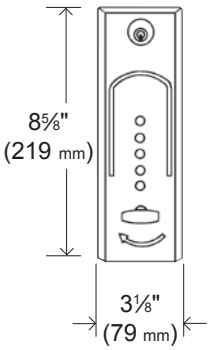

Exterior

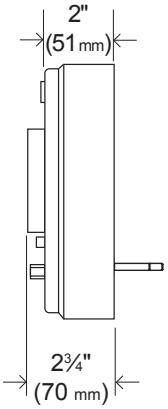

Exterior Side

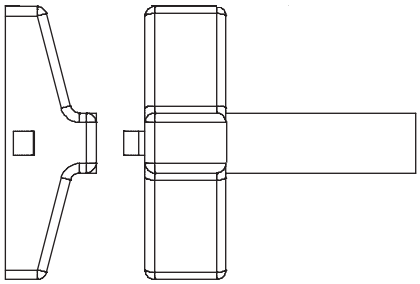

Interior
(not supplied)

2015

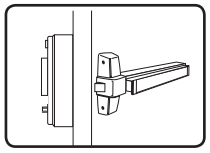

- Combination Entry
- Egress with Exit Device (not supplied)
- Compatible with Many Rim Mounted Exit Devices
- Exterior Combination Change (only)

KABA® BEYOND SECURITY

Simplex®
2015 Series

Example 2015 - 26D - 41

2015	-	26D	-	41
Model		Finish		Packaging

Build the model number with the desired options

Base Model	Description	Base Price
201526D41	Combination Entry with Thumbturn Style Knob+ (clockwise rotation only)	$397.50

Notes

Key override orders will consist of all locks on the order being keyed alike, unless there is a specific key cut called out or the locks on the order are requested to be keyed differently

+ **Exit Device Compatibility**

For the most accurate listing of compatible Exit Devices, visit http://kaba.toSimplex2015

American Device 6300 Series, 6303 Series

Corbin 21, 22, 25, 26NT, 27K, 29, 29-1⁄4, 29M2, 29-1⁄2M2, 29NTM2, 29D20, LA29, 39, 39EL, 39LLD, 390, LA39

Detex Advantex Series 10, 20, 21, 40, 50, 51

Dorex 8500R/8500F

Dorex 9500R/9500FR

Magno Krom LHR only: 500-4, 550-4, 650-4, 1500-4, 1550-4, 1650-4; RHR only: 600-3

Monarch 18RBA, 18RP, 18VP, F18RBA, F18RP, F18VP, FXXRBA, FXXRP, FXXVP, XXRBA, XXRP, XXVP

Precision Hardware FL-D103; RHRB only 810-H; RH or LH: 103, R103, D203, H-203, 1103, D1203, H1203

Russwin 365, 3651⁄4, LT365, 370, 372, LA372, 375, LT375, 377, 382, 384, 385, 388, 572, 572EL, 572ELD, U572, LA572

Sargent 2813, 2804, 6804, 12-6804, 9804RHRB, 12-9804LHRB, 9898E, 9898K

Von Duprin 22 Rim, 22 Rim-F, 88 Rim, 88 Rim-F, 98 Rim, 98 Rim-F, 99 Rim, 99 Rim-F; 2227, 2227-F, 9827, 9827-F, 9847, 9847-F, 9927-F, 9947-F; Yale 1500 Series, 7000 Series

- **Cannot be used with surface-mounted Exit Devices with counterclockwise rotating hubs, thumb-operated Mortise design Exit Devices, or vertical rod Exit Devices**

ATTENTION: Compatibility is subject to change if modifications are made by Exit Device manufacturers without Kaba's knowledge

Exit Device not included (sold separately)

Simplex®
3000 Series

BEYOND SECURITY KABA®

- **Mechanical Pushbutton Lock**
- **Single Access Code**
- **Fits Narrow Stile Aluminum Glass Doors**
- **Thumbturn**

Features

Access Control:	Mechanical pushbutton lock eliminates problems and costs associated with issuing, controlling, and collecting keys and cards. Provides exterior access by combination.
No Battery:	Fully mechanical lock eliminates the material and labor expense of battery replacements
Locking Device:	Adams Rite 4510/4710/4910 mortise latch
Number of Codes:	Single access code—one easy-to-manage code for all users
Programming:	Lock is easily programmed via keypad without removing lock from the door
Handing:	Non-handed; required drive assembly is factory-handed, not field reversible
Key Override:	Accepts Maximum Security (MS) mortise cylinders; can be used to override the lock combination and gain access using a key. Allows facilities to initiate or maintain a master-keyed security system (keyed alike or keyed differently).
Operation Modes:	Pushbutton Access Passage—allows access without using the lock entry code. Feature activated from the outside using cylinder override key. Lockout—disables the lock so that entry code cannot be used to gain access. Access is permitted using the key override only. This is activated from the outside using the cylinder override key.
Economical:	A cost effective access control solution

Mechanical Features

Construction:	All metal cast front housing, force-resistant, clutch-protected fixed thumbturn
Numeric Keypad:	Vandal resistant, solid metal pushbuttons
Handing:	Non-handed; required drive assembly is factory-handed—not field reversible
Finishes:	Satin Chrome 26D (626); 55 (695) Duranodic
Backset:	Model 3010: Right Hand; Right Hand Reverse—31⁄32" (25 mm) Model 3020: Left Hand; Left Hand Reverse—31⁄32" (25 mm) Model 3030: Right Hand; Right Hand Reverse—1⅛" (29 mm) or 1½" (38 mm) Model 3040: Left Hand; Left Hand Reverse—1⅛" (29 mm) or 1½" (38 mm)
Latch:	Purchased separately (Adams Rite)
Stile Width:	1⅞" (48 mm) minimum, required for mounting
Door Thickness:	1¾" (44 mm) maximum
Weight:	4 lbs. (1.8 kg)
Strike:	Sold separately (Adams Rite or Kaba Ilco Corp.)
Items Supplied Include:	Installation instructions, full-scale template, combination change key, and screwdriver

Certification and Testing

Durability: Weather resistant

Warranty

Warranty: 1-year warranty

Narrow Stile Aluminum Door Lock

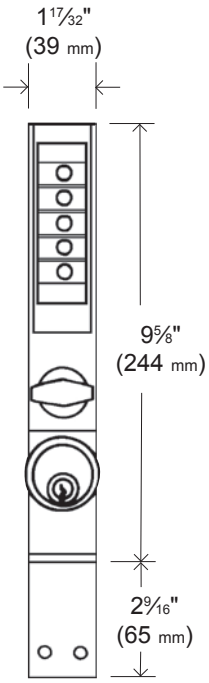

Exterior

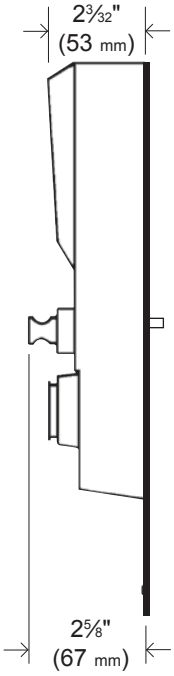

Exterior Side

Model 3001

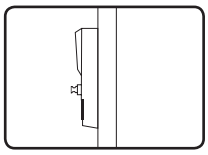

- Combination Entry
- Key Override (not supplied)
- Passage
- Lockout

Model 3002

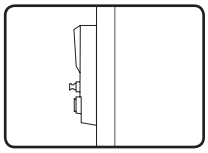

- Combination Entry
- Key Override (not supplied)
- Cylinder Guard
- Passage
- Lockout

Simplex®
3000 Series

BEYOND SECURITY KABA®

Example

3 0 0 1 - 2 6 D - 4 1

Model	Function		Finish		Packaging
3 0 0	☐	-	☐ ☐ ☐	-	4 1

Build the model number with the desired options

Base Model	Description	Base Price
300126D41	Narrow Stile Lock with Thumbturn, Key Override, Passage, Lockout (Drive Assembly Required)+	$270.50

Choose One Option from Each Category

Function Options	Description	Price
1	Combination Entry, Key Override, Passage, Lockout	No Charge
2	Combination Entry, Key Override, Passage, Lockout, Cylinder Guard	Add $16.00

Finish Options	Description	Price
26D	Satin Chrome (626)	No Charge
55	Duranodic—Powder Paint (695)	No Charge

Items Supplied with the Lock

- Installation Manual
- Full-Scale Template
- Required Installation Hardware

Notes

For complete installation, a housing and drive assembly are required

Adams Rite hardware sold separately (contact Ilco Rocky Mount 800.334.1381 for equivalent Adams Rite hardware)

+Choose a Drive Assembly

Model Options	Description	Price
3010-19-41	31⁄32" (25 mm) Backset/Handing Right Hand or Right Hand Reverse	$68.00
3020-19-41	31⁄32" (25 mm) Backset/Handing Left Hand or Left Hand Reverse	$68.00
3030-19-41*	1⅛" (29 mm) Backset/Handing Right Hand or Right Hand Reverse	$68.00
3040-19-41*	1⅛" (29 mm) Backset/Handing Left Hand or Left Hand Reverse	$68.00

* Also accommodates equivalent 1½" (38 mm) backset

Note

Cylinder not included

KABA BEYOND SECURITY

Simplex® 6200 Series

- **Mechanical Pushbutton Lock**
- **Single Access Code**
- **Cylindrical**
- **Thumbturn**

Features

Access Control:	Mechanical pushbutton lock eliminates problems and costs associated with issuing, controlling, and collecting keys and cards. Provides fully mechanical exterior access by combination, while allowing free egress at all times by interior knob.
No Battery:	Fully mechanical lock eliminates the material and labor expense of battery replacements
Locking Device:	Cylindrical latch with 3-hour UL/ULC fire rating for "A" labeled doors
Number of Codes:	Single access code—one easy-to-manage code for all users
Programming:	Lock is easily programmed via keypad without removing lock from the door
Handing:	Factory-handed left; easily field reversible
Operation Mode:	Pushbutton access
Economical:	A cost effective access control solution

Mechanical Features

Construction:	All metal cast front housing, force-resistant, clutch-protected exterior thumbturn, unified interior trim plate, fixed interior knob
Numeric Keypad:	Vandal resistant, solid metal pushbuttons
Handing:	Factory-handed left; easily field reversible
Finishes:	Hard, durable powder paint finishes: Gold Tone (060), Almond (067), Black (085), and Gray (086) (Gold and Almond inside trim/plated Bright Brass) (Black and Gray inside trim/plated Satin Chrome)
Latch:	½" (13 mm) throw latch, floating faceplate (UL listed)
Backset:	2¾" (70 mm) or 2⅜" (60 mm) backset
Minimum Stile Recommended:	5" (127 mm)
Weight:	4.5 lbs. (2 kg)
Strike:	Standard strike plate

Installation

Installation:	ASA 161 door preparation with two additional through bore holes. Lock can be inverted if the existing auxiliary lock obstructs installation.
Door Thickness:	1⅜" (35 mm) to 2¼" (57 mm); wood or metal
Items Supplied Include:	Installation manual, full-scale template, combination change tool, and required installation hardware

Certification and Testing

Fire Rating:	3-hour UL/ULC fire rating for "A" labeled doors
Durability:	Weather resistant

Warranty

Warranty:	1-year warranty

Cylindrical

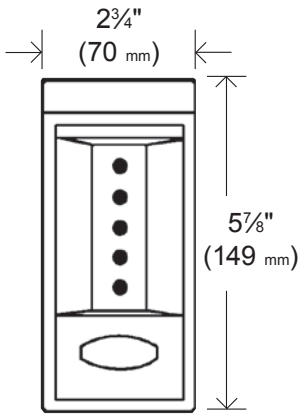

Exterior

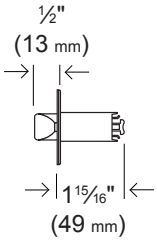

Latch

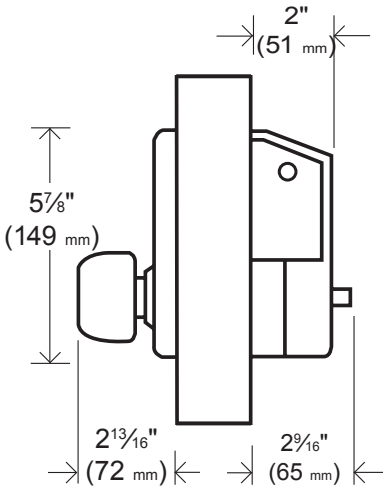

Interior / Exterior Side

Model 6202

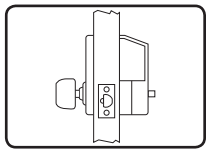

- Combination Entry
- UL Listed Latch
- ½" (13 mm) Throw Floating Face Plate
- Backset 2⅜" (60 mm)
- Primary Lock

Model 6204

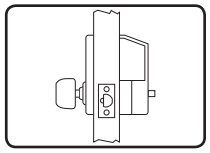

- Combination Entry
- UL Listed Latch
- ½" (13 mm) Throw Floating Face Plate
- Backset 2¾" (70 mm)
- Primary Lock

KABA® BEYOND SECURITY

Simplex® 6200 Series

Example

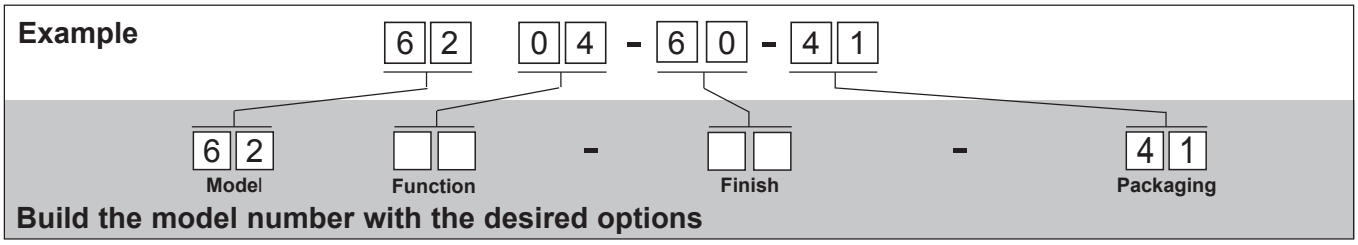

Build the model number with the desired options

Base Model	Description	Base Price
62046041	Cylindrical Lock with Exterior Thumbturn, Internal Knob, 2¾" (70 mm) Backset	$222.50

Choose One Option from Each Category

Function Options	Description	Price
02	Cylindrical ½" (13 mm) throw latch, floating face plate, 2⅜" (60 mm) backset (UL listed)	No Charge
04	Cylindrical ½" (13 mm) throw latch, floating face plate, 2¾" (70 mm) backset (UL listed)	No Charge

Finish Options	Description	Price
60	Gold Tone—Powder Paint (060) (inside trim/plated Bright Brass)	No Charge
67	Almond—Powder Paint (067) (inside trim/plated Bright Brass)	No Charge
85	Black—Powder Paint (083) (inside trim/plated Satin Chrome)	No Charge
86	Gray—Powder Paint (086) (inside trim/plated Satin Chrome)	No Charge

Items Supplied with the Lock

- Installation Manual
- Full-Scale Template
- Required Installation Hardware

Simplex®
7100 Series

BEYOND SECURITY KABA®

- **Mechanical Pushbutton Lock**
- **Single Access Code**
- **Deadbolt/Spring Latch/Rim Deadlocking Latch**
- **Thumbturn**

Features

Access Control:	Mechanical pushbutton lock eliminates problems and costs associated with issuing, controlling, and collecting keys and cards. Provides fully mechanical primary or auxiliary pushbutton access control by exterior combination, while allowing free egress at all times by interior thumbturn. Deadbolt models must be manually relocked. Deadlocking latch models automatically relock each time the door closes.
No Battery:	Fully mechanical lock eliminates the material and labor expense of battery replacements
Locking Device Options:	Deadbolt—must be manually relocked Deadlocking latch—relocks automatically when door closes Rim locking latch—relocks automatically when door closes; also has latch holdback
Number of Codes:	Single access code—one easy-to-manage code for all users
Programming:	Lock is easily programmed via keypad without removing lock from the door
Handing:	Field reversible
Operation Modes:	Pushbutton Access Latch Holdback (7106 only)
Economical:	A cost effective access control solution

Mechanical Features

Construction:	All metal cast front housing; force-resistant, clutch-protected exterior thumbturn
Numeric Keypad:	Vandal resistant, solid metal pushbuttons
Handing:	Field reversible
Finishes:	**For all models except 7106:** Bright Brass 03 (605), Satin Chrome 26D (626), Antique Copper (AC) (059), Gold Vein (GV) (060), Antique White (AW) (062), Silver Vein (SV) (061), Black 19 (676), and Antique Brass 05 (609) **Model 7106**: Inside trim (Black only) All other Black models, inside trim (Satin Chrome)
Latch:	1" (25 mm) tubular deadbolt ½" (13 mm) deadlocking latch ⅝" (16 mm) rim deadlocking latch
Backset:	2¾" (70 mm) or 2⅜" (60 mm) backset
Strike:	Models 7102 and 7108: Flat deadbolt strike plate Model 7104: Curved lip strike plate Model 7106: Box strike for in-swing doors and flat strike for out-swing doors
Minimum Stile Required:	4" (102 mm)
Weight:	2.5 lbs. (1.1 kg)

Installation

Installation:	1⅜" (35 mm) diameter through bore; 1" (25 mm) diameter cross bore; ¾" (19 mm) through bore; 2 x ¼" through bores
Door Thickness:	1⅜" (35 mm) to 2¼" (57 mm), wood or metal
Items Supplied Include:	Installation manual, full-scale template and required installation hardware

Certification and Testing

Durability:	Weather resistant

Warranty

Warranty:	1-year warranty

Auxiliary Lock

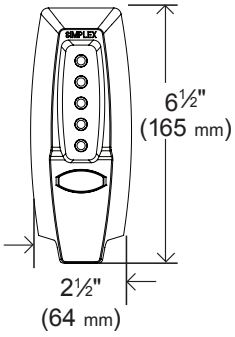

Exterior

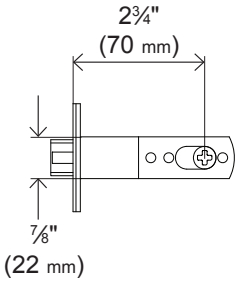

Latch

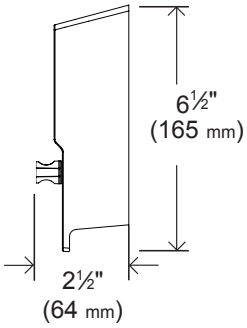

Exterior Side

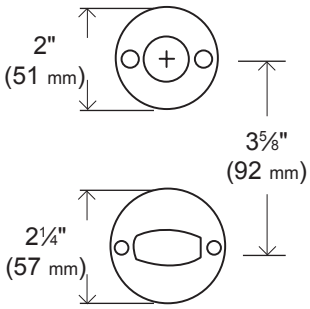

Models 7102, 7104, 7108

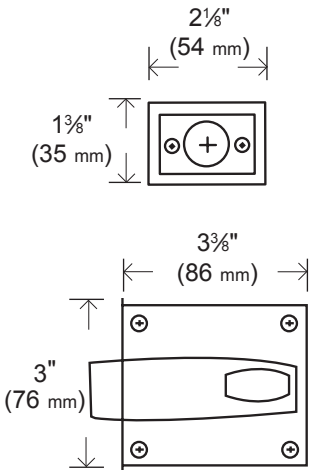

Models 7106

Interior

Model 7102

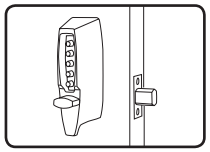

- 1" (25 mm) Tubular Deadbolt, Flat Face Plate
- Backset 2¾" (70 mm)
- Auxiliary Lock
- Manual Relock
- Numerous Finishes

Model 7104

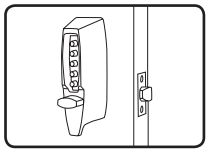

- ½" (13 mm) Deadlocking Latch, Flat Face Plate
- Backset 2⅜"–2¾" (60-70 mm)—Adjustable
- Primary / Auxiliary Lock
- Automatic Relock
- Numerous Finishes

Model 7106

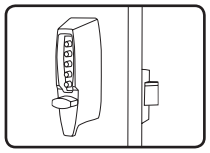

- ⅝" (16 mm) Rim Deadlocking Latch, Flat Face Plate
- Backset 2⅜" (60 mm)
- For Wood Doors Only
- Auxiliary Lock
- Automatic Relock and Latch Holdback
- Select Finishes

Model 7108

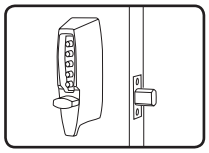

- 1" (25 mm) Tubular Deadbolt, Flat Face Plate
- Backset 2⅜" (60 mm)
- Auxiliary Lock
- Manual Relock
- Numerous Finishes

Simplex®
7100 Series

BEYOND SECURITY KABA®

Example 7 1 0 8 - 2 6 D - 4 1

7 1 0 **Model** | ☐ **Function** | - | ☐ ☐ ☐ **Finish** | - | 4 1 **Packaging**

Build the model number with the desired options

Base Model	Description	Base Price
710826D41	Auxiliary Lock with Thumbturn, Deadbolt, 2⅜" (60 mm) Backset	$150.50

Choose One Option from Each Category

Function Options	Description	Price
2	1" (25 mm) Tubular Deadbolt, flat front face plate 2¾" (70 mm) backset	No Charge
4	½" (13 mm) Deadlocking Latch, flat front face plate Adjustable 2⅜" (60 mm) to 2¾" (70 mm) backset	No Charge
6+	⅝" (16 mm) Rim Deadlocking Latch (for wood doors only) 2⅜" (60 mm) backset (Black or Satin Chrome lock only)++	No Charge
8	1" (25 mm) Tubular Deadbolt, flat front face plate 2⅜" (60 mm) backset	No Charge

Finish Options	Description	Price
26D	Satin Chrome (626)	No Charge
05	Antique Brass (609)	Add $25.00
03	Bright Brass (605)	Add $25.00
AW	Antique White (Powder Paint) (062)	No Charge
AC	Antique Copper (Powder Paint) (051)	No Charge
GV	Gold Vein (Powder Paint) (060)	No Charge
SV	Silver Vein (Powder Paint) (061)	No Charge
19+	Black (Powder Paint) (676)++	No Charge

Items Supplied with the Lock

- Installation Manual
- Full-Scale Template
- Required Installation Hardware

Notes

+ Automatic relock and latch holdback feature—available in Satin Chrome or Black only—inside trim is Black only on this model

++ 7106 Models inside trim (Black only)—all other Black Models/inside trim (Satin Chrome)

KABA® BEYOND SECURITY

Simplex® 900 Series

- **Mechanical Pushbutton Lock**
- **Single Access Code**
- **Deadbolt/Spring Latch**
- **Thumbturn**

Features

Access Control:	Mechanical pushbutton lock eliminates problems and costs associated with issuing, controlling, and collecting keys and cards. Provides fully mechanical access control, while allowing free egress at all times by interior thumbturn. Deadbolt models must be manually relocked. Deadlocking spring latch models automatically relock each time the door closes.
No Battery:	Fully mechanical lock eliminates the material and labor expense of battery replacements
Locking Device Options:	Deadbolt—1" throw, manual relock Deadlocking Latch—⅝" throw with automatic relock
Number of Codes:	Single access code—one easy-to-manage code for all users
Programming:	Lock is easily programmed via keypad without removing lock from the door
Handing:	Field reversible latch; invert the lock for right-hand doors; roman numerals are easily read in either orientation
Optional Key Override:	Can be used to override the lock combination and gain access using a key. Allows facilities to initiate or maintain a master-keyed security system (keyed alike or keyed differently). Override models can be ordered with or without a cylinder.
Options:	• Add panic bar release kit (select models) • Keyed alike option available (select models) • Latch holdback (select models) • D.O.D. compliant (select model) • Substitute a 2½" (64 mm) lever in place of the standard inside thumbturn (select models)
Operation Modes:	Pushbutton Access Latch Holdback—keeps latch retracted to allow access with combination (select models)
Economical:	A cost effective access control solution

Mechanical Features

Construction:	All metal cast front housing, force-resistant, clutch-protected thumbturn, metal exterior trim plate
Numeric Keypad:	Vandal resistant, solid metal pushbuttons
Handing:	Field reversible latch; invert the lock for right-hand doors; roman numerals are easily read in either orientation
Finishes:	04 (606) Satin Brass and 26D (626) Satin Chrome Model 929/927: 26D (626) Satin Chrome only
Latch:	1" (25 mm) deadbolt; ⅝" deadlocking spring latch
Weight:	4 lbs. (1.8 kg)
Strike:	Includes strike plate for outswing doors, cast box strike for inswing doors; metal door frames require the optional surface mortise box strike or use of an adapter kit

Installation

Backset:	2 9/16" (65 mm) for outswing doors, 2½" (64 mm) for inswing doors
Door Thickness:	1⅜" (35 mm) to 1½" (38 mm) 1¾" (44 mm) to 2⅛" (54 mm) Model 929: Lockset for D.O.D. standards, 1¾" (44 mm) to 2⅛" (54 mm) only Model 927: Lockset for D.O.D. standards, 1⅜" (35 mm) to 1½" (38 mm) only
Items Supplied Include:	Installation manual, full-scale template, strike for inswing and outswing doors (appropriate to latch type), and required installation hardware

Certification and Testing

Durability:	Weather resistant

Warranty

Warranty:	1-year warranty

Auxiliary Lock

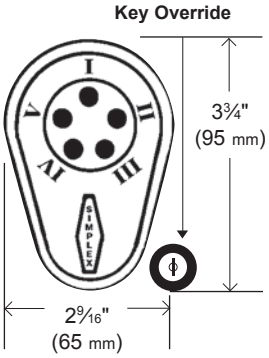

Exterior

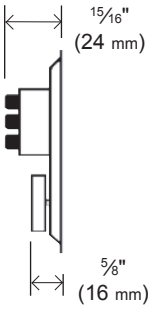

Exterior Side

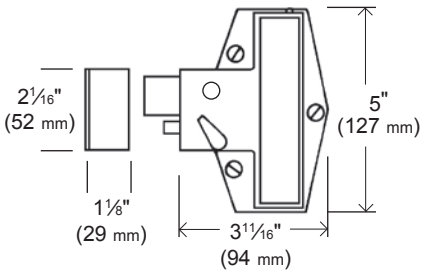

Interior
(spring latch models)

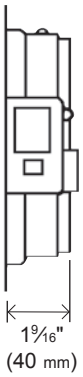

Interior Side

Models 902, 904, 906, 910

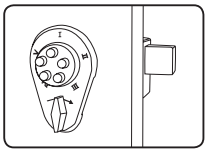

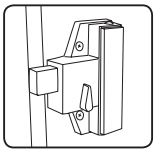

- Combination Entry
- Deadbolt
- 1" (25 mm) Throw, Flat Face Plate

- Auxiliary Lock
- Manual Relock
- Key Override (select models)

Models 917, 919, 935, 938

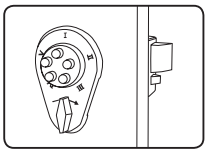

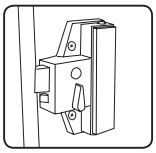

- Combination Entry
- Deadlocking Latch
- ⅝" (16 mm) Throw, Flat Face Plate

- Primary or Auxiliary Lock
- Automatic Relock
- Key Override (select models)

Model 927, 929

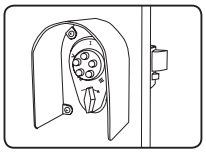

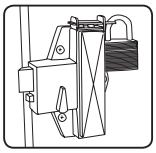

- Combination Entry
- Security Lock
- ⅝" (16 mm) Throw

- Primary or Auxiliary Lock
- Automatic Relock
- D.O.D. Compliant

KABA® BEYOND SECURITY

Simplex® 900 Series

Example 9 0 2 0 0 0 0 - 2 6 D - 4 1

9 ☐ ☐ (Model) ☐ ☐ ☐ ☐ (Options) - ☐ ☐ ☐ (Finish) - 4 1 (Packaging)

Build the model number with the desired options

Base Model	Description	Base Price
902000026D41	Auxiliary Lock with Thumbturn, 1" (25 mm) Deadbolt, Fits 1⅜"–1½" (35 mm–38 mm) thick	$152.50

Choose One Option from This Category

Model Options	Description	Price
02	1" (25 mm) Deadbolt Latch, 1⅜"–1½" (35 mm–38 mm) thick	No Charge
04	1" (25 mm) Deadbolt Latch, 1¾"–2⅛" (44 mm–54 mm) thick	No Charge
06	1" (25 mm) Deadbolt Latch, 1⅜"–1½" (35 mm–38 mm) thick, key override	Add $58.00
10	1" (25 mm) Deadbolt Latch, 1¾"–2⅛" (44 mm–54 mm) thick, key override	Add $58.00
17	⅝" (16 mm) Deadlocking Spring Latch, flat front, 1⅜"–1½" (35 mm–38 mm) thick, latch holdback	Add $25.00
19	⅝" (16 mm) Deadlocking Spring Latch, flat front, 1¾"–2⅛"(44 mm–54 mm) thick, latch holdback	Add $25.00
20	⅝" (16 mm) Deadlocking Spring Latch, flat front, 1⅜"–1½" (35 mm–38 mm) thick, no latch holdback	Add $25.00
22	⅝" (16 mm) Deadlocking Spring Latch, flat front, 1¾"–2⅛" (44 mm–54 mm) thick, no latch holdback	Add $25.00
27++	⅝" (16 mm) Deadlocking Spring Latch, flat front, 1⅜"–1½" (35 mm–38 mm) thick	Add $114.00
29++	⅝" (16 mm) Deadlocking Spring Latch, flat front, 1¾"–2⅛" (44 mm–54 mm) thick	Add $114.00
35*	⅝" (16 mm) Deadlocking Spring Latch, flat front, 1⅜"–1½" (35 mm–38 mm) thick, latch holdback, key override	Add $82.00
38*	⅝" (16 mm) Deadlocking Spring Latch, flat front, 1¾"–2⅛" (44 mm–54 mm) thick, latch holdback, key override	Add $82.00

* Key override orders will consist of all locks on the order being keyed alike, unless there is a specific key cut called out or the locks on the order are requested to be keyed differently

Choose up to Four Options - Insert 0 if Less than Four Options are required.

Options	Description	Price
1	Substitutes a surface-mounted strike box for metal door frames in place of the standard strike box (part number 74464) (see 900 Series Accessories—Adapter Kit)	Add $5.00
2	Deletes the key cylinder from key override models. Recessed escutcheon recommended for standard rim cylinder installation. Rim cylinder tailpiece must be reduced in width to accommodate the tail receptacle. Specify the position of the cylinder tailpiece (vertical or horizontal) to mate with the standard size rim cylinder (not supplied).	Less $21.00
3	Substitutes a 2½" (64 mm) lever in place of the standard inside thumbturn (part number 74437) (cannot be used with option 5)	Add $32.00
4*	Master Keyed (key override models)	Add $12.00
5	Adds the panic bar release kit to a spring latch model (part number 74438) (cannot be used with option 3)	Add $34.00
6	Deletes latch holdback (935 and 938 models)	No Charge
7	Deletes the key cylinder from key override models and changes gear plate to a 100 Series. Recessed escutcheon recommended for standard rim cylinder installation. The rim cylinder tailpiece must be reduced in width to accommodate the tail receptacle. Specify the position of the cylinder tailpiece (vertical or horizontal) to mate with the standard size rim cylinder (not supplied).	Less $21.00
8	Changes gear plate to accept a horizontal tailpiece	No Charge

Finish Options	Description	Price
26D	Satin Chrome (Powder Paint)	No Charge
04+	Satin Brass (Powder Paint)	No Charge

Notes

+ 04 Finish not available on Model 927/929

++ D.O.D. Compliant

* Key override orders will consist of all locks on the order being keyed alike, unless there is a specific key cut called out or the locks on the order are requested to be keyed differently.

KABA® BEYOND SECURITY

Simplex® 9600 Series

- **Mechanical Pushbutton Lock**
- **Single Access Code**
- **Deadbolt/Spring Latch**
- **Thumbturn**

Features

Access Control:	Mechanical pushbutton lock eliminates problems and costs associated with issuing, controlling, and collecting keys and cards. Uses same combination system as our other pushbutton access controls and are specifically designed for cabinet doors, desk drawers, and similar applications. Ideal for use in many locations: medicine chests, liquor cabinets, gun boxes, courier pick-up boxes, home entertainment units, cleaning supply cabinets, tool chests, private files, audio-visual cabinets, and petty cash drawers.
No Battery:	Fully mechanical lock eliminates the material and labor expense of battery replacements
Locking Device Options:	Flat deadbolt Round deadbolt Round spring latch bolt
Number of Codes:	Single access code—one easy-to-manage code for all users
Programming:	Lock is easily programmed via keypad without removing lock from the door
Handing:	Non-handed
Operation Mode:	Pushbutton access
Economical:	A cost effective access control solution
Key Override (Optional):	Select models

Mechanical Features

Construction:	All metal cast face plate; force-resistant, protected exterior knob
Numeric Keypad:	Vandal resistant, solid metal pushbuttons
Handing:	Non-handed
Finishes:	Bright Brass 03 (605), Satin Brass 04 (606), and Satin Chrome 26D (626); black trim plate (optional)
Weight:	1 lb. (0.5 kg)
Bolt:	End-throw/cross-throw deadbolt (must be manually relocked) End-throw/cross-throw spring latch (with automatic relock)

Installation

Door Thickness:	Wood doors: ⅝" (16 mm) to ⅞" (22 mm) Sheet metal applications: 14 to 20 gauge ⅓", 1/16", ¼"
Installation:	Horizontal or vertical. Two-step mortise installation using router or 5½" (140 mm) x 1" (25 mm) slot with trim plate (for wood applications). Punched slot or series of 7/16" (11 mm) drilled holes (for metal applications).

Warranty

Warranty:	1-year warranty

Cabinet Lock

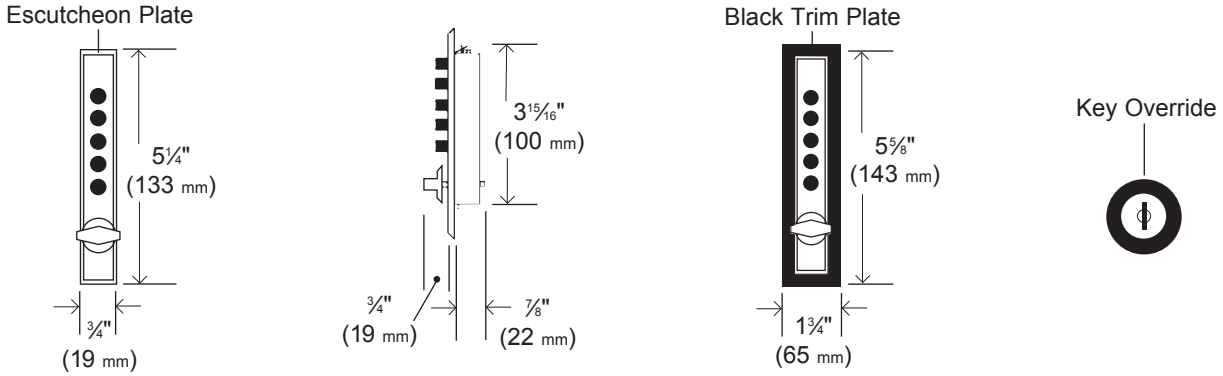

Exterior **Side View** **Exterior with Trim Plate**

KABA® BEYOND SECURITY

Simplex® 9600 Series

Example 9 6 6 2 C 1 0 - 2 6 D - 4 1

9 6	☐	☐	C	☐	☐	-	☐ ☐ ☐	-	4 1
Model	Function	Bolt Throw	Knob Style	Trim Plate	Latch Bolt		Finish		Packaging

Build the model number with the desired options

Base Model	Description	Base Price
9662C1026D41	Cabinet Lock, Sheet Metal, End Throw, Clutch Ball Bearing Knob, No Trim Plate, Standard Deadbolt	$88.00

Choose One Option from Each Category

Function Options	Description	Price
2	Wood Application, ⅝" (16 mm) to ⅞" (27 mm) door thickness	Add $2.00
6	Sheet Metal, 14 to 20 gauge door thickness	No Charge
7	Sheet Metal, ⅛" (3 mm) door thickness	No Charge
8	Sheet Metal, 3⁄16" (5 mm) door thickness	No Charge
9	Sheet Metal, ¼" (6 mm) door thickness	No Charge

Bolt Throw Options	Description	Price
1	Cross Throw	No Charge
2	End Throw	No Charge
3	End Throw with Cross Throw Parts	No Charge

Knob Style	Description	Price
C	Clutch Ball Bearing Knob	No Charge

Trim Plate Options	Description	Price
1	Without Trim Plate	No Charge
2	With Trim Plate (not available on 969 Model)	No Charge

Latch Bolt Options	Description	Price
0	Standard Deadbolt	No Charge
1	Spring Loaded Latch	Add $6.00
2	Spring Loaded Latch with Key Override (keyed alike)	Add $14.00

Finish Options	Description	Price
03	Bright Brass (605)	No Charge
04	Satin Brass (606)	No Charge
26D	Satin Chrome (626)	No Charge

Cabinet Locks, no options available

Model	Description	Price
C9601-xxx-41 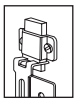	Wood, ⅝" (16 mm) to ⅞" (27 mm), door thickness, end throw, deadbolt, trim plate included, ball bearing clutch knob	$95.50
C9602-xxx-41 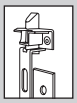	Wood, ⅝" (16 mm) to ⅞" (27 mm), door thickness, end throw, spring latch, trim plate included, ball bearing clutch knob	$95.50

Replace xxx above with your preferred finish code.

KABA BEYOND SECURITY

Simplex®

File Guard FG10, F2500, F2570, F2580 Series

- **Mechanical Pushbutton Lock (Select Models)**
- **Single Access Code**
- **Fits Standard 2, 4, and 5 Drawer Cabinets**
- **Special Lengths Available**

Features

Access Control:	Mechanical pushbutton lock eliminates problems and costs associated with issuing, controlling, and collecting keys and cards. Ideal for turning an ordinary filing cabinet into a security cabinet. Can be used to store privileged or confidential information.
No Battery:	Fully mechanical lock eliminates the material and labor expense of battery replacements
Locking Device:	Self-contained tubular deadbolt
Number of Codes:	Single access code—one easy-to-manage code for all users
Programming:	Lock is easily programmed via keypad without removing lock from the door
Handing:	Non-handed
Operation Mode:	Pushbutton access
Economical:	A cost effective access control solution
Options:	Model FG10: Pushbutton lock File Guard Model F2500: For use with a padlock (not included) Model F2570: For use with a padlock (not included) Model F2580: Built in 5-pin key lock (Schlage "C" or Weiser Keyway) in a rugged, metal housing

Mechanical Features

Construction:	Heavy-duty steel channel bar
Installation:	Model FG10, F2500, F2580: Attach mounting pins (⅜" steel bolts) to cabinet Model F2570: Attach mounting pins (⅜" steel bolts) and hinges to cabinet
Control (for pushbutton):	Model FG10: Screwdriver (not included) Model F2580: Key lock
Numeric Keypad:	Vandal resistant, solid metal pushbuttons
Handing:	Non-handed
Finish:	B—Black
Items Supplied Include:	Mounting hardware: Notch pins, clevis pins, lock washers, screw nuts, and screws as required (as applicable)

Warranty

Warranty:	1-year warranty

Dimensions

FG Series

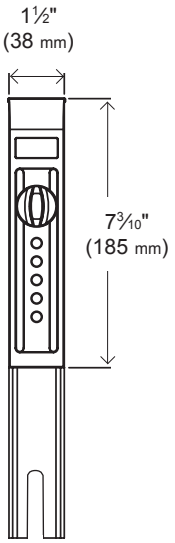

Exterior

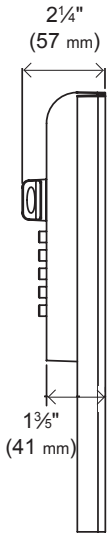

Exterior Side

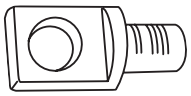

Clevis Pin

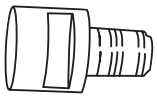

Notch Bolt

F2500 Series

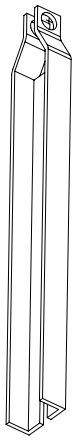

F2570 Series

F2580 Series

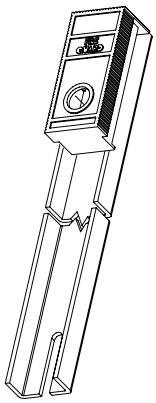

KABA® BEYOND SECURITY

Simplex®
File Guard
FG10, F2500, F2570, F2580 Series

Example

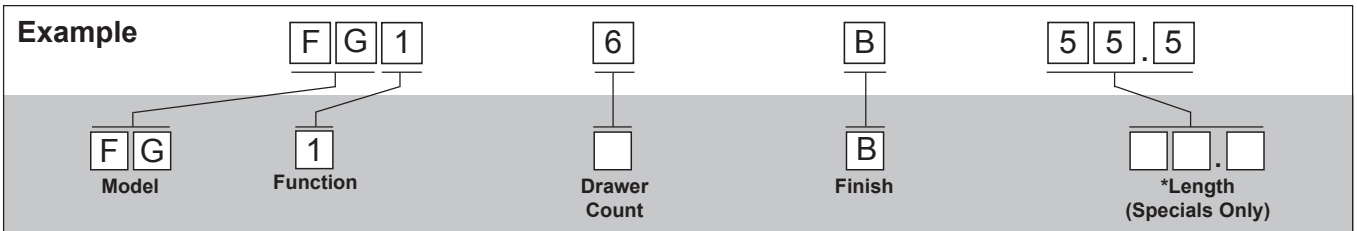

Build the model number with the desired options

Base Model	Description	Length	Base Price
FG12B	Pushbutton Fileguard, 2-Drawer Cabinet	29"	$151.50

Available in Black (B) only.

Models	Description	Length	Price
FG12 - B	Pushbutton, 2-Drawer Cabinet	29"	$151.50
FG14 - B	Pushbutton, 4-Drawer Cabinet	51¼"	$158.00
FG15 - B	Pushbutton, 5-Drawer Cabinet	59"	$161.00
FG16 - B*	Pushbutton, special length (indicate length when ordering)		$177.00
F25002+	Accessory Pack (provides additional / replacement mounting hardware)	—	$16.50
F2502 - B	Padlock, 2-Drawer Cabinet (padlock not included)	29"	$66.00
F2504 - B	Padlock, 4-Drawer Cabinet (padlock not included)	51¼"	$71.00
F2505 - B	Padlock, 5-Drawer Cabinet (padlock not included)	59"	$76.00
F2506 - B*	Padlock, special length (indicate length when ordering)		$86.00
F25002+	Accessory Pack (provides additional / replacement mounting hardware)	—	$16.50
F2572 - B	Self-storing Lock, 2-Drawer Cabinet	29"	$82.00
F2574 - B	Self-storing Lock, 4-Drawer Cabinet	51¼"	$89.00
F2575 - B	Self-storing Lock, 5-Drawer Cabinet	59"	$93.00
F2576 - B++,*	Self-storing Lock, special length (indicate length when ordering)		$98.00
F25703+	Accessory Pack (provides additional / replacement mounting hardware)	—	$16.50
F2582 - B	Key Lock, 2-Drawer Cabinet, specify Schlage "C" or Weiser Keyway	29"	$82.00
F2584 - B	Key Lock, 4-Drawer Cabinet, specify Schlage "C" or Weiser Keyway	51¼"	$89.00
F2585 - B	Key Lock, 5-Drawer Cabinet, specify Schlage "C" or Weiser Keyway	59"	$93.00
F2586 - B*	Key Lock, special length (indicate length when ordering)		$102.00
F25804+	Accessory Pack (provides additional / replacement mounting hardware)	—	$16.50

Notes

+ **Includes:** Mounting Hardware: Notch Pins, Clevis Pins, Lock Washers, Screw Nuts, and Screws as required

* **Special Lengths: Available with minimum quantity of 12 per length;** Maximum 66", Minimum 17"
To order, specify 6 as a last digit of product number followed by length (inches)

++ F2576—Self-storing lock, special length has extended lead time

Simplex®
LD450 Series

BEYOND SECURITY KABA®

- **Mechanical Pushbutton Lock**
- **Single Access Code**
- **Light Duty Application**
- **Knob**
- **Latch Holdback**

Features

Access Control:	Mechanical pushbutton lock eliminates problems and costs associated with issuing, controlling, and collecting keys and cards
No Battery:	Fully mechanical lock eliminates the material and labor expense of battery replacements
Locking Device:	Tubular latch
Number of Codes:	Single access code (non-sequential)—one easy-to-manage code for all users
Programming:	Lock is easily programmed via keypad once removed from door
Handing:	Pre-assembled for right-hand door installations (easily changed in field)
Operation Modes:	Pushbutton Access Latch Holdback (easily removed in field)
Economical:	A cost effective access control solution
Key Override:	Not available

Mechanical Features

Construction:	Solid cast housings; cast knobs and levers
Numeric Keypad:	Vandal resistant, metal pushbuttons
Handing:	Non-handed, pre-assembled for right-hand door installations (easily changed in field)
Finishes:	Satin Stainless 32D (630), Bright Brass (03), Antique Brass (05) housings and knobs
Backset:	2¾" (70 mm) backset, 2⅜" (66 mm) backset
Latch:	½" (51 mm) latch
Weight:	4 lbs. (1.81 kg)

Installation

Door Preparation:	Easily installs on wood or metal doors. Requires four holes (two for through bolts, one for latch spindle, and one for latch support post).
Door Thickness:	1⅜ " (35 mm) to 2½ " (64 mm)
Supplies Included:	Lock assembly, installation manual, template, and required hardware; as well as two 2½" (64 mm) x 8" (203 mm) cover plates and two 2" (51 mm) gaskets

Warranty

Warranty:	1-year warranty

Dimensions

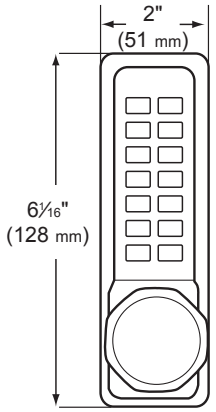

Exterior

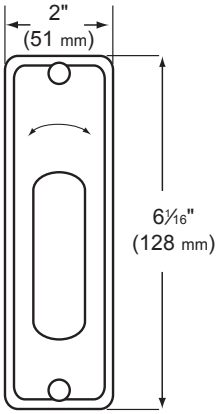

Interior

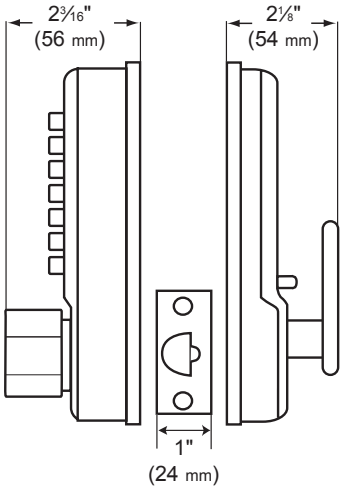

Side View

Simplex®
LD450 Series

BEYOND SECURITY KABA®

Example L D 4 5 1 - 3 5 - 3 2 D - 4 1

Series	Model	Latch	Function	Knob / Lever	Finish	Packaging
L D 4	5	☐	3	5	☐ ☐ ☐	4 1

Build the model number with the desired options

Base Model	Description	Base Price
LD4513532D41	Light Duty Pushbutton Lock, 2⅜" Backset, Latch Holdback, Knob	$146.00

Choose One Option from Each Category

Model	Description	Price
5	Mechanical Pushbutton Lock	No Charge

Latch Options	Description	Price
1	Tubular Latch Bolt 2⅜" (60 mm) backset	No Charge
2	Tubular Latch Bolt 2¾" (70 mm) backset	No Charge

Function	Description	Price
3	Latch Holdback (45 series only)	No Charge

Knob	Description	Price
5	Octagon Knob (45 series only)	No Charge

Finish Options	Description	Price
32D	Satin Stainless (simulated 630 finish)	No Charge
03	Bright Brass (while supplies last)	No Charge
05	Antique Brass (while supplies last)	No Charge

Items Supplied with the Lock

- Installation Manual
- Full-Scale Template
- Required Installation Hardware
- Internal/External Gaskets
- Internal/External Cover Plates

KABA® BEYOND SECURITY

Simplex®
LD470 Series

- **Mechanical Pushbutton Lock**
- **Single Access Code**
- **Light Duty Application**
- **Lever**
- **Passage**

Features

Access Control:	Mechanical pushbutton lock eliminates problems and costs associated with issuing, controlling, and collecting keys and cards
No Battery:	Fully mechanical lock eliminates the material and labor expense of battery replacements
Locking Device:	Tubular latch
Number of Codes:	Single access code (non-sequential)—one easy-to-manage code for all users
Programming:	Lock is easily programmed via keypad once removed from door
Handing:	Pre-assembled for right-hand door installations (easily changed in field)
Operation Modes:	Pushbutton Access Passage (easily removed in field)
Economical:	A cost effective access control solution
Key Override:	Not available

Mechanical Features

Construction:	Solid cast housings; solid cast levers
Numeric Keypad:	Vandal resistant, metal pushbuttons
Handing:	Non-handed, pre-assembled for right-hand door installations (easily changed in field)
Finishes:	Satin Stainless 32D (630), Bright Brass (03), Antique Brass (05) housings and levers
Backset:	2¾" (70 mm) backset, 2⅜" (66 mm) backset
Latch:	3½" (89 mm) latch
Weight:	6.5 lbs. (2.94 kg)

Installation

Door Preparation:	Easily installs on wood or metal doors. Requires three holes (two through bolts, one for latch spindle)
Door Thickness:	1⅜" (35 mm) to 2½" (64 mm)
Supplies Included:	Lock assembly, installation manual, template, and required hardware; as well as two 2½" (64 mm) x 8" (203 mm) cover plates and two 2" (51 mm) gaskets

Warranty

Warranty:	1-year warranty

Dimensions

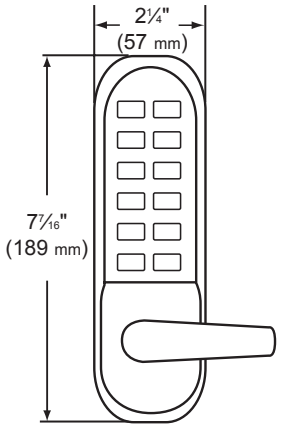

Exterior

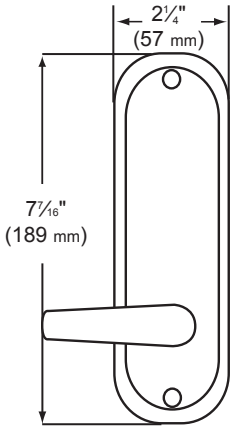

Interior

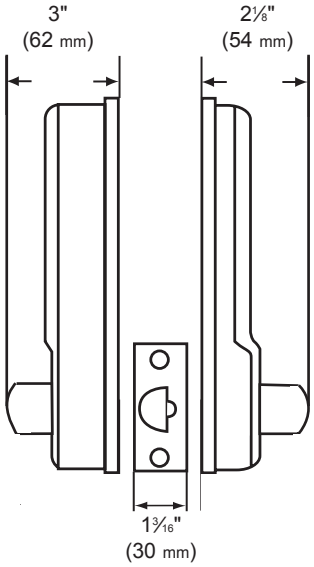

Side View

KABA® BEYOND SECURITY

Simplex®
LD470 Series

Example L D 4 7 1 - 4 8 - 3 2 D - 4 1

Series	Model	Latch		Function	Knob / Lever		Finish	Packaging
L D 4	7	☐	-	4	8	-	☐ ☐ ☐	4 1

Build the model number with the desired options

Base Model	Description	Base Price
LD4714832D41	Light Duty Pushbutton Lock, 2⅜" Backset, Passage, Lever	$286.00

Choose One Option from Each Category

Model	Description	Price
7	Mechanical Pushbutton Lock with Vandal Resistant Clutching Lever	No Charge

Latch Options	Description	Price
1	Tubular Latch Bolt 2⅜" (60 mm) backset	No Charge
2	Tubular Latch Bolt 2¾" (70 mm) backset	No Charge

Function	Description	Price
4	Passage (47 series only)	No Charge

Lever	Description	Price
8	Flat Lever (47 series only)	No Charge

Finish Options	Description	Price
32D	Satin Stainless (simulated 630 finish)	No Charge
03	Bright Brass (while supplies last)	No Charge
05	Antique Brass (while supplies last)	No Charge

Items Supplied with the Lock

- Installation Manual
- Full-Scale Template
- Required Installation Hardware
- Internal/External Gaskets
- Internal/External Cover Plates

Simplex® 2015 Series

	Item#	Description	Price
	54266	Blank Keys	$4.50
	54266-1-11	Master Keys for Key Override Models (old #54266-1) (specify keycut)	$14.50
	54266-2-11	Service Keys for Override Models (old #54266-2) (specify keycut)	$8.00
	74773-000-01	5" (125 mm) Tailpiece for Freezer Doors	$13.00

Simplex® 900 Series

	Item#	Description	Price
	800-04-41	Adapter Kit for doors with metal frames. Includes riser plates and surface mounted strike. Finish 04 Satin Brass; packaged one per box. (old #74464/74468)	$37.50
	800-26D-41	Adapter Kit for doors with metal frames. Includes riser plates and surface mounted strike. Finish 26D Satin Chrome; packaged one per box. (old #74464/74468)	$37.50
	805-26D-41	Face Plate Shield. Not for use with key override models. Inhibits unauthorized observation of the combination. Finish 26D Satin Chrome; packaged one per box. (old #24081-000-01)	33.00
	54266	Blank Keys	$4.50
	54266-1-11	Master Keys for Key Override Models (old #54266-1) (specify keycut)	$14.50
	54266-2-11	Service Keys for Override Models (old #54266-2) (specify keycut)	$7.50
	74437-26D-01	Inside Lever Handle (lock not included)	$37.50
	74437-04-01	Inside Lever Handle (lock not included)	$37.50
	74438-26D-01	Panic Bar Release Kit (lock not included)	$37.50
	74438-04-01	Panic Bar Release Kit (lock not included)	$37.50
	24095-04-10	Strike Spacers (10 pack)	$11.00
	74301-000-01	Metal Template for varying backsets	$98.00

Simplex® 1000, L1000, and 5000 Series

	Item#	Description	Price
	204231-03-41	Wrap Plate, (h)10½" (267 mm) x (d)5" (127 mm), Bright Brass (605)	$70.00
	204231-05-41	Wrap Plate, (h)10½" (267 mm) x (d)5" (127 mm), Antique Brass (609)	$70.00
	204231-26D-41	Wrap Plate, (h)10½" (267 mm) x (d)5" (127 mm), Satin Chrome (626)	$70.00
	204232-03-41	Wrap Plate, (h)15" (381 mm) x (d)5" (127 mm), Bright Brass (605)	$99.00
	204232-05-41	Wrap Plate, (h)15" (381 mm) x (d)5" (127 mm), Antique Brass (609)	$99.00
	204232-26D-41	Wrap Plate, (h)15" (381 mm) x (d)5" (127 mm), Satin Chrome (626)	$99.00
	201484-03-01	Best Equivalent Small Format Interchangeable Core, Bright Brass (605)	$64.00
	201484-05-01	Best Equivalent Small Format Interchangeable Core, Antique Brass (609)	$64.00
	201484-26D-01	Best Equivalent Small Format Interchangeable Core, Satin Chrome (626)	$64.00
	54843-000-01	Anti-Spy Shield (1000/L1000 models only) (old part number 201600-083-01)	$45.00
	204022-000-01	Latch Extension Assembly converts to 3¾" (10 cm) backset	$35.00
	204023-000-01	Latch Extension Assembly converts to 5" (13 cm) backset	$31.00
	54644-000-41	Weather Cover (smoke colored)	$58.50
	64684-26D-01	Installation Jig (1000/L1000/5000/E5000)	$405.00
	201821-26D-01	ASA Roller Strike	$44.00
	201821-05-01	ASA Roller Strike	$44.00
	201821-03-01	ASA Roller Strike	$44.00
	50567701-000-01	Mortise stabilizer for hollow metal door-1¾" only	$23.00
	54720-000-01	Mortise Mounting Bracket for Hollow Metal Doors	$17.50
	74773-000-01	5" (125 mm) tailpiece for freezer doors (LP1000)	$13.00

Simplex® Mounts*—Hardwood product demonstration mount, packaged 1 per box

	Item#	Description	Price
	204083-000-41	**8100** Series	$165.00
	204086-000-41	**EE1000** Series	$165.00
	204087-000-41	**LP1000** Series	$165.00
	203053-000-41	**900** Series—**904 and 919** Dual Mount	$165.00
	204189-000-41	**7100** Series—**7108 and 7104** Dual Mount	$165.00
	204092-000-41	**7100** Series—**7106** Model only	$165.00
	204094-000-41	**6200** Series	$165.00
	204096-000-41	**2015** Series	$165.00
	203044-000-41	**1000, L1000, 5000, and E-Plex 5x00** Series	$165.00
	203056-000-41	**5010** Series (Exit Trim only)	$165.00
	204246-000-41	**LD Series—450 and 470** Dual Mount	$165.00
	74378-CH	**3000** Series Narrow Stile (includes Adams Rite latch and paddle)	$720.50
	SP5000 ACLMT	Simplex **5000** Acrylic Mount	$308.00

* Mounts do not include locks

All Models

Item	Model	Description	Price
	64754-000-01	Lubriplate Aero Grease	$14.50

Strong, Powerful Security Solutions Since 1862.

SIMPLEX® Mechanical Pushbutton Locks		5000	1000 / EE1000	L1000 / 8100	2015	3000	6200	7100	LD450 / LD470
Access	PIN Access (Single User)	✔	✔	✔	✔	✔	✔	✔	✔
	Mechanical Key Override	✔	✔	✔		✔			
Locking Devices	Cylindrical Latch	✔	✔	✔			✔		
	Mortise (ASM)	✔		✔					
	Exit Trim	✔		✔	✔				
	AR Latch					✔			
	Tubular Latch							✔	✔
	Tubular Deadbolt							✔	
	Auxiliary Latch							✔	
Mechanical Features	No Wire Installation	✔	✔	✔	✔	✔	✔	✔	✔
	No Computer Programming	✔	✔	✔	✔	✔	✔	✔	✔
	No Software Programming	✔	✔	✔	✔	✔	✔	✔	✔
	Mechanical Key Override	✔	✔	✔		✔			
	Interchangeable Core (Best)	✔	✔	✔					
	Removable Core (Large Format)	✔	✔	✔					
	Removable Mortise Cylinder					✔			
	Key-in-Lever	✔							
	Non-handed (Field Reversible)	✔	✔			✔	✔	✔	✔
	Vandal Resistant Clutch					✔	✔	✔	✔
	Fits 1 3/8" to 2 1/4" *	✔	✔	✔	✔		✔	✔	✔
	No Batteries	✔	✔	✔	✔	✔	✔	✔	✔
	Indoor/Outdoor (Approved)	✔	✔	✔	✔	✔	✔	✔	✔
	Latch Holdback							✔	✔
	Passage	✔	✔	✔		✔			✔
	Lockout/Privacy	✔	✔	✔		✔			
	Programmed at Keypad	✔	✔	✔	✔	✔	✔	✔	✔
	Various Finishes Available	✔	✔	✔		✔	✔	✔	
Warranty Certification	3-Year Warranty	✔	✔	✔					
	1-Year Warranty				✔	✔	✔	✔	✔
	BHMA Grade 1 Certified	✔							
	3 Hr UL/ULC Fire Rated Latch	✔	✔	✔			✔		
	ADA Compliant Levers	✔		✔					✔

* 8100 and EE1000 series fit 1 3/4" to 2 1/4" door thickness
* L1076 model fits 1 3/4" door thickness only
* LD series fit 1 3/8" to 2 1/2" door thickness

A Solution for Every Access Point…and Every Budget.

SIMPLEX®	5000	1000 / EE1000*	L1000 / 8100*	2015	3000	6200	7100	LD450 / LD470
ACCESS CREDENTIAL								
NUMBER OF ACCESS CODES	SINGLE CODE	SINGLE CODE	SINGLE CODE	SINGLE CODE	SINGLE CODE	SINGLE CODE	SINGLE CODE	SINGLE CODE
LOCKING DEVICE OPTIONS								
FEATURES	1⅜" → 2¼"	1¾" → 2¼"	1⅜" → 2¼"	1⅜" → 2½"	1¾"	1⅜" → 2¼"	1⅜" → 2¼"	1⅜" → 2½"
OPTIONS	PRIVACY/ LOCKOUT; KNOB; EXTERIOR/INTERIOR COMBINATION CHANGE; PASSAGE	PRIVACY/ LOCKOUT; ENTRY/EGRESS; PASSAGE; INTERIOR COMBINATION CHANGE	PRIVACY/ LOCKOUT; PASSAGE; INTERIOR COMBINATION CHANGE		PRIVACY/ LOCKOUT; PASSAGE; INTERIOR COMBINATION CHANGE		LATCH HOLDBACK; INTERIOR COMBINATION CHANGE	LATCH HOLDBACK; PASSAGE
CERTIFICATIONS	UL; ADA Compliant; BHMA CERTIFIED GRADE 1	UL	UL; ADA Compliant			UL		ADA Compliant
KEY OVERRIDE	I/C, R/C; K-I-L	I/C, R/C	I/C, R/C		REPLACEABLE MORTISE CYLINDER			

* 8100 and EE1000 series fit 1 3/4" to 2 1/4" door thickness
* L1076 model fits 1 3/4" door thickness only
* LD series fit 1 3/8" to 2 1/2" door thickness

For more detailed information, please go to www.kaba-adsamericas.com

BEYOND SECURITY

Kaba Access & Data Systems Americas
2941 Indiana Ave.
Winston-Salem NC 27105
1.800.849.8324

www.kaba-adsamericas.com

KAA1026-0515