AMERISTAR® FENCE PRODUCTS

Wood Gate Hardware Product Catalog

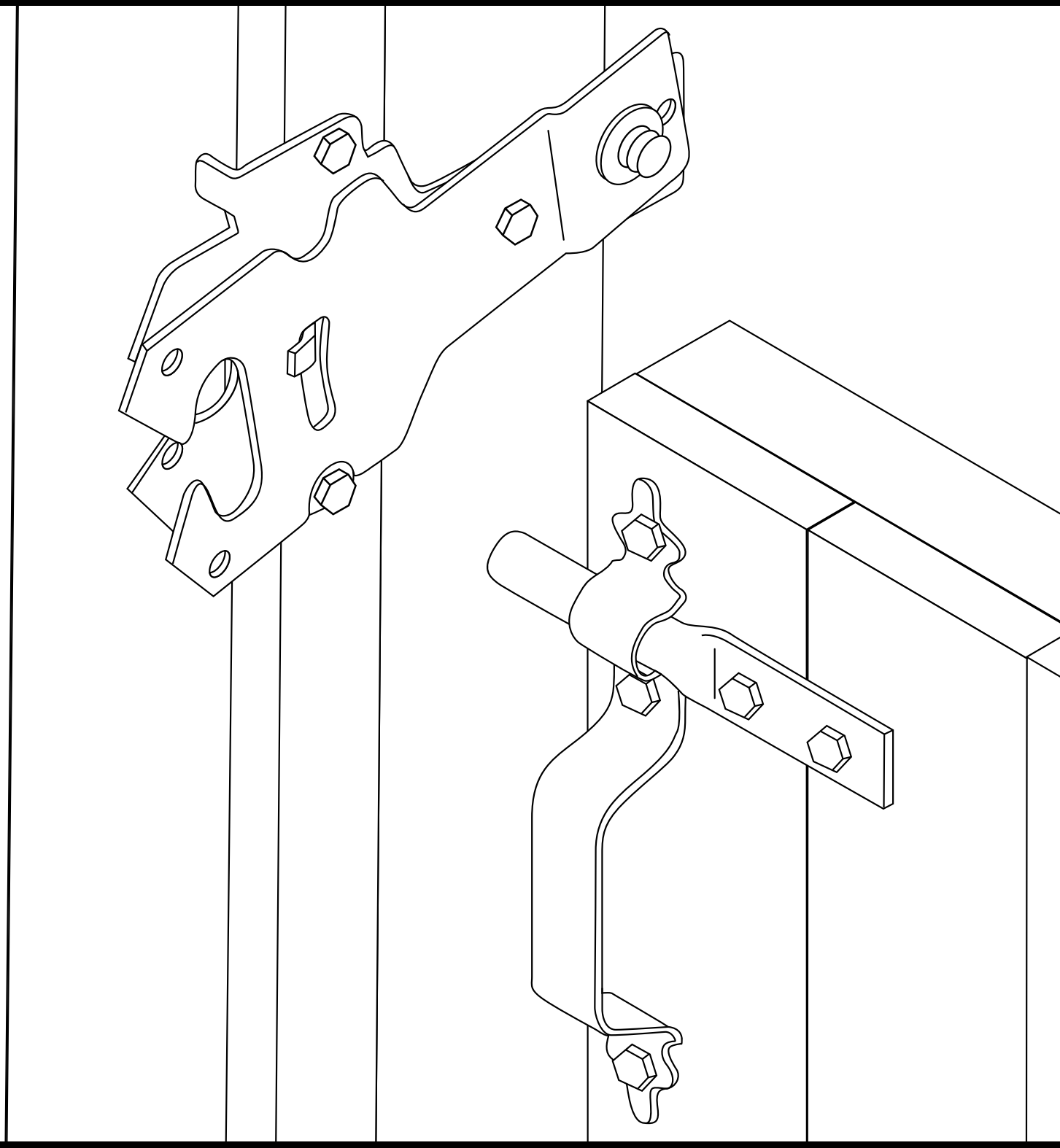

888-333-3422 | AMERISTARFENCE.COM

AMERISTAR WOOD GATE HARDWARE

JUST ASK FOR THE

MAXIMA® TRADITIONAL

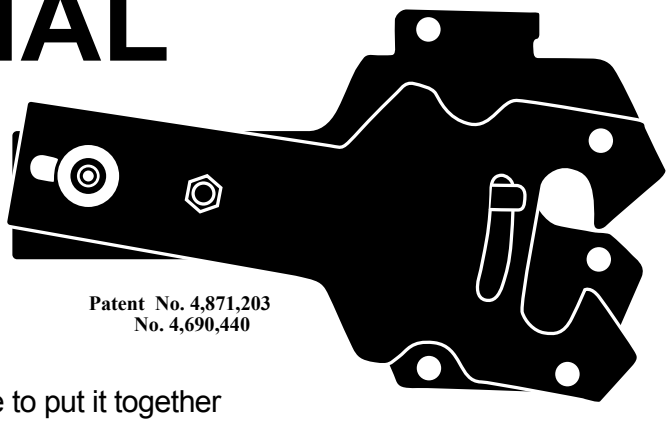

Patent No. 4,871,203
No. 4,690,440

THE ULTIMATE

INSTALLER'S DREAM

» **PRE-ASSEMBLED** – You do not have to put it together

» **EASIEST INSTALLATION** – Two piece latch assembly mounts quickly with two fasteners

» **NO SPRINGS** – Simplifies installation/operation... eliminates lost or missing spring problems

» **ONE-STEP REVERSIBILITY** – Just flip it over... no disassembly or reassembly required

» **SUPPORTED STRIKER BAR** – Handle adds stability to gate mounted striker

ELIMINATES PROBLEMS

» **ANTI-SAG DESIGN** – Forces gate striker to catch

» **POSITIVE GATE SUPPORT** – Provides complete upward support on latch side

» **NO SMALL REPLACEMENT PARTS NEEDED** – Elminates need for replacing springs or assembly screws

» **EXTRA HEAVY DUTY** – 11 gauge steel mainframe and keeper; 3/4" diameter striker

FENCE OWNER'S DELIGHT

» **PADLOCKS ON EITHER SIDE** – For any gate/post framing thickness

» **"SLIP-LOCK"** – Solid brass button enables manual locking back side

» **SAFETY CONTOUR** – No protruding points to cause accidental injury

» **HIGH SECURITY** – Positive capture feature of keeper and catch makes release of striker impossible when latch is locked

» **POWDER-COATED FINISH** – Withstands the elements

WOOD GATE HARDWARE
MAXIMA® TRADITIONAL STYLE

www.ameristarfence.com
1-888-333-3422
FAX: 1-877-926-3747

ITEM DESCRIPTION	PART NUMBER	PRICE BOX	HANDLE OPTION	FINISH	PACKAGE	BOX QTY	BOX WT
Maxima® Deluxe Latch Set *(w/Slip-Lock)*	296-SX		w/Handle	Black	P/B w/scr.	20 Ea.	49

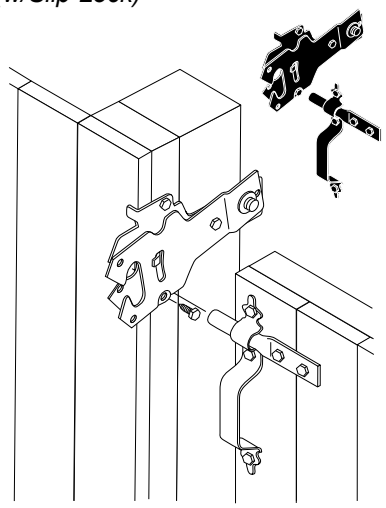

• See Below

The "Max" deluxe latch comes complete with striker, handle, slip-lock and screws.

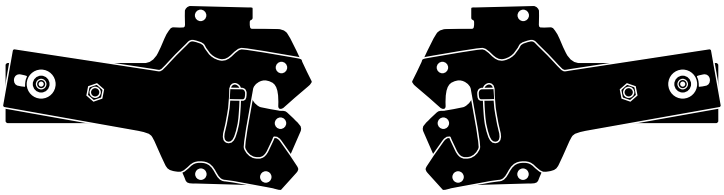

Above latch is completely reversible (without disassembly) for right or left opening gates.

Maxima® Post Latch	210-SX		w/o handle	Black	P/B w/scr.	20 Ea.	33
	210-SHX		w/handle	Black	P/B w/scr.	20 Ea.	39

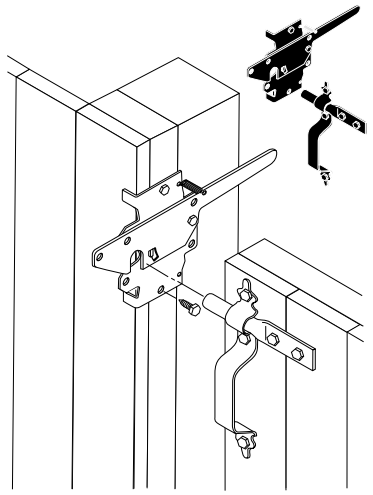

• See Below

A heavy duty post latch for single or double gates. Self latching works right or left. Lockable from both sides.

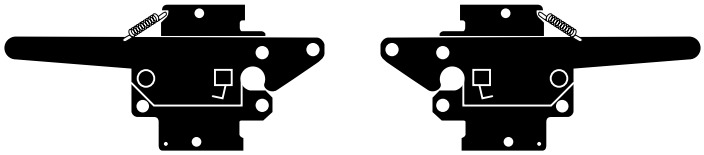

Above latch can be easily reversed from right opening to left by removing the shoulder bolt and spring, reversing the paddle and reinserting the bolt and spring.

WARNING: Due to extensive variation in local ordinances for fencing requirements around pools, Ameristar **does not certify** these latches as meeting applicable pool codes. The installer and homeowner should pay careful attention to local pool regulations and if they have any doubts about regulatory compliance, they should contact the local regulatory agency for an inspection and ruling on compliance.

WOOD GATE HARDWARE
MAXIMA® TRADITIONAL STYLE

www.ameristarfence.com
1-888-333-3422
FAX: 1-877-926-3747

ITEM DESCRIPTION	PART NUMBER	PRICE BOX	SIZE	FINISH	PACKAGE	BOX QTY	BOX WT
Maxima® 8" Strap Hinge	130-SX		8"	Black	P/B w/scr.	20 Pr.	61
	The “Max” 8" strap hinge has a 4¾" hinge pin making it the widest 8" strap hinge available. With 12 ga. steel, 5" in height and 16" in overall length, the “Max” is an extra heavy duty, non-sag hinge for long life over extended cycles of operation.						
Maxima® 10" Strap Hinge	132-SX		10"	Black	P/B w/scr.	20 Pr.	72
	The “Max” 10" strap has all the same extra heavy duty features as the 8" “Max” strap hinge plus the overall length is extended to 20", making it the prime choice for extremely large gates and doors.						
Maxima® 8" Tee Hinge	134-SX		8"	Black	P/B w/scr.	20 Pr.	53
	The “Max” 8” Tee has the extra long 4¾" hinge pin. It is made with 12 ga. steel and has overall dimensions of 7¼" height by 10½" length.						
Maxima® 10" Tee Hinge	136-SX		10"	Black	P/B w/scr.	20 Pr.	60
	The “Max”10" Tee is exellent for heavy gates and doors. It is 12 ga., 7¼" high by 13" long overall and has the long 4¾" hinge pin.						
Maxima® Butterfly Hinge	138-SX		8"	Black	P/B w/scr.	20 Pr.	47
	The winged “Max” Butterfly hinge is 12 ga. steel; it is 7¼" by 4½" long overall; and has a 4¾" long hinge pin. The “Max” Butterfly is ideal for applications where vertical mounting space is extremely narrow.						

WOOD GATE HARDWARE
MAXIMA® TRADITIONAL STYLE

www.ameristarfence.com
1-888-333-3422
FAX: 1-877-926-3747

ITEM DESCRIPTION	PART NUMBER	PRICE BOX	SIZE	FINISH	PACKAGE	BOX QTY	BOX WT
Maxima® Deluxe Latch Walk Gate Set	**Two Hinge Walk Gate Set**						
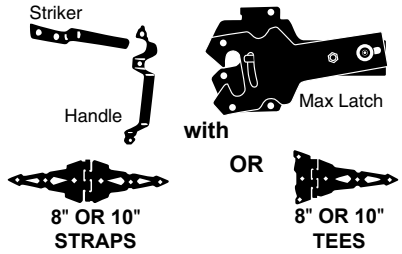	430-P/BX		(2) - 8" Strap	Black	P/B w/scr.	8 Sets	44
	432-P/BX (N/S)		(2) - 10" Strap	Black	P/B w/scr.	8 Sets	49
	431-P/BX (N/S)		(2) - 8" Tee	Black	P/B w/scr.	8 Sets	41
	433-P/BX (N/S)		(2) - 10" Tee	Black	P/B w/scr.	8 Sets	45
	Three Hinge Walk Gate Set						
	439-PBX (N/S)		(3) - 8" Strap	Black	P/B w/scr.	8 Sets	52
	Complete kit for 1 walk gate.						
Maxima® Post Latch Walk Gate Set	**Two Hinge Walk Gate Set**						
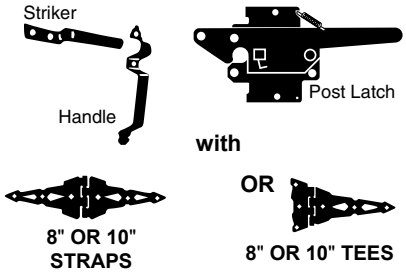	410-PBX		(2) - 8" Strap	Black	P/B w/scr.	8 Sets	41
	412-PBX (N/S)		(2) - 10" Strap	Black	P/B w/scr.	8 Sets	46
	411-PBX		(2) - 8" Tee	Black	P/B w/scr.	8 Sets	37
	413-PBX (N/S)		(2) - 10" Tee	Black	P/B w/scr.	8 Sets	41
	Three Hinge Walk Gate Set						
	419-PBX		(3) - 8" Strap	Black	P/B w/scr.	8 Sets	52
	Complete kit for 1 walk gate.						
Maxima® Deluxe Latch Double Walk Gate Set	481X		(4) 8" Strap	Black	P/B w/scr.	6 Sets	70
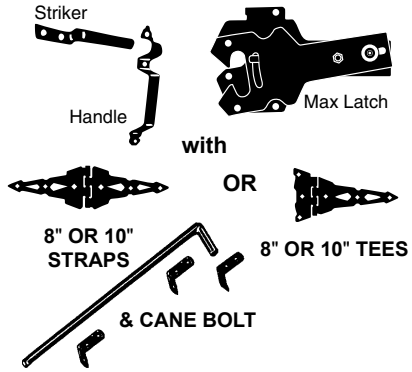	483X		(4) 10" Strap	Black	P/B w/scr.	6 Sets	78
	493X (N/S)		(4) 10" Tee	Black	P/B w/scr.	6 Sets	70
	Complete kit for 1 double drive gate. 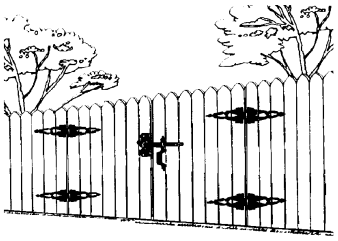						
Maxima® Post Latch Double Walk Gate Set	461X		(4) 8" Strap	Black	P/B w/scr.	6 Sets	69
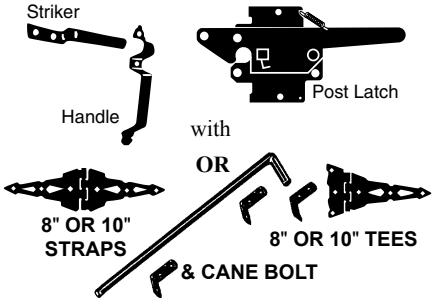	463X		(4) 10" Strap	Black	P/B w/scr.	6 Sets	75
	Complete kit for 1 double drive gate. 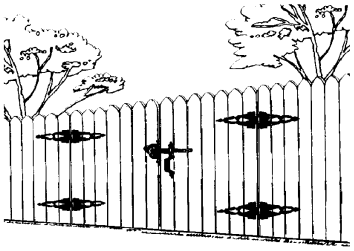						

WOOD GATE HARDWARE
CONTINENTAL STYLE

www.ameristarfence.com
1-888-333-3422
FAX: 1-877-926-3747

ITEM DESCRIPTION	PART NUMBER	PRICE BOX	SIZE	FINISH	PACKAGE	BOX QTY	BOX WT
Continental Thumb Latch 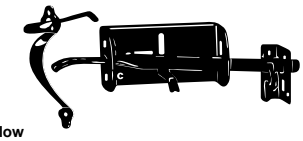 • See Below	220X		5" Lever	Black	P/B w/scr.	20 Ea.	29
	222X (N/S)		6" Lever	Black	P/B w/scr.	20 Ea.	29
	Decorative, reversible, self latching. For single gates opening inward.						
WARNING: Due to extensive variation in local ordinances for fencing requirements around pools, Ameristar **does not certify** these latches as meeting applicable pool codes. The installer and homeowner should pay careful attention to local pool regulations and if they have any doubts about regulatory compliance, they should contact the local regulatory agency for an inspection and ruling on compliance.							
Continental 8" Strap Hinge	116-SX		8"	Black	P/B w/scr.	20 Pr.	56
	Popular for walk gates and double drive gates up to 10' openings where a slimmer look of a narrower strap is desired.						
Continental Half-Strap Hinge	126-SX		8"	Black	P/B w/scr.	20 Pr.	47
	For small gates and doors where mounting space prohibits the length of the full strap or the height of the tee hinge. 11¾" overall length.						
Continental Tee Hinge 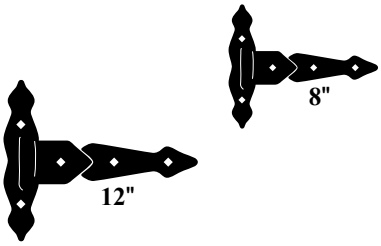	101-SPX		8"	Black	P/B w/3" fastener	20 Pr.	49
	101-SX		8"	Black	P/B w/scr.	20 Pr.	48
	104-SX		12"	Black	P/B w/scr.	5 Pr.	29
	Available in two sizes: - Tee Hinge with 8" strap overall dimensions = (7¾" x 9") - Tee Hinge with 12" strap overall dimensions = (10" x 14.875")						
Continental Spring-Loaded Tee Hinge 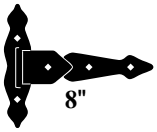	108-SX		8"	Black	P/B w/scr.	20 Pr.	49
	Same as #101 Tee Hinge with the addition of an adjustable interior spring. For application where self-closing gates are required.						
Continental Screw Hook & Strap Hinge	140-SX (N/S)		4" x 8"	Black	P/B w/scr.	20 Pr.	42
	½" x 4" x 2" screw hook with 8" strap hinge.						
Continental Bolt Hook & Strap Hinge	144-SX (N/S)		7" x 8"	Black	P/B w/scr.	20 Pr.	54
	146-SX		8" x 12"	Black	P/B w/scr.	10 Pr.	54
	Available in two sizes: ½" x 2" x 7" w/8" strap hinge & .625" x 2" x 8" w/12" strap hinge.						

WOOD GATE HARDWARE
UNIVERSAL STYLE

www.ameristarfence.com
1-888-333-3422
FAX: 1-877-926-3747

ITEM DESCRIPTION	PART NUMBER	PRICE BOX	SIZE	FINISH	PACKAGE	BOX QTY	BOX WT
Universal Gravity Latch 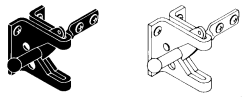 • See Below	230X		5" Striker	Zinc	P/B w/scr.	50 Ea.	24
	232X		5" Striker	Black	P/B w/scr.	50 Ea.	23
	Works right or left, self-latching.						
Universal Floating Gravity Latch 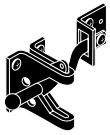 • See Below	235X (N/S)		5" Striker	Black	P/B w/scr.	50 Ea.	30
	Works right or left; floating striker enables latch to engage, even if gate sags.						
Universal Offset Gravity Latch • See Below	236X (N/S)		Offset	Black	P/B w/scr.	50 Ea.	24
	Works right or left, for use when striker must be mounted on a 90° angle.						
Universal Heavy-Duty Gravity Latch 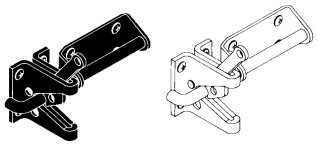 • See Below	276X		-----	Black	P/B w/scr.	20 Ea.	30
	276-SPX		-----	Black	P/B w/scr.	20 Ea.	31
	278X		-----	Zinc	P/B w/scr.	20 Ea.	30
	Complete with screws. Extra heavy-duty. Item #276-SPX includes pull cable and ring.						
Universal Heavy-Duty Floating Bar Latch 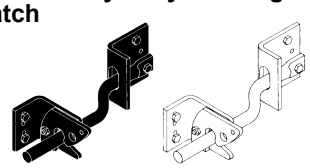 • See Below	274X (N/S)		-----	Zinc	P/B w/scr.	20 Ea.	34
	275X (N/S)		-----	Black	P/B w/scr.	20 Ea.	34
	275-SPX (N/S)		-----	Black	P/B w/scr.	20 Ea.	40
	Complete with screws. Extra heavy-duty. Floating bar engages even when gate sags. Item #275-SPX includes pull cable and ring.						
Universal Slide Bolt Latch 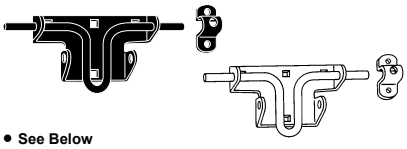 • See Below	241X		-----	Black	P/B w/scr.	30 Ea.	24
	243X (N/S)		-----	Zinc	P/B w/scr.	30 Ea.	24
	Multi-purpose latch, slide bolt action, provides position for use of a padlock. Gate can swing in or out. Ideal for garage doors.						
Universal 6" Tee Hinge 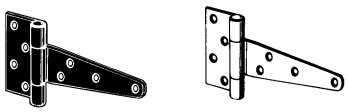	190X		6"	Zinc	Bulk w/o scr.	40 Pr.	50
	191X (N/S)		6"	Black	Bulk w/o scr.	40 Pr.	52
	Economical hinge for smaller doors and walk gates. Easy for the "Do-It-Yourself" customers to install.						

WARNING: Due to extensive variation in local ordinances for fencing requirements around pools, Ameristar does not certify these latches as meeting applicable pool codes. The installer and homeowner should pay careful attention to local pool regulations and if they have any doubts about regulatory compliance, they should contact the local regulatory agency for an inspection and ruling on compliance.

WOOD GATE HARDWARE
COLONIAL STYLE

www.ameristarfence.com
1-888-333-3422
FAX: 1-877-926-3747

ITEM DESCRIPTION	PART NUMBER	PRICE BOX	SIZE	FINISH	PACKAGE	BOX QTY	BOX WT
Colonial All-Purpose Gravity Latch • See Below	270X	262.22	------	Zinc	P/B w/scr.	20 Ea.	36
	Complete with screws, pull cable & ring. Latch will allow for unusual sag.						
Colonial Split Rail Loop Latch • See Below	260X	148.74	------	Zinc	P/B w/scr.	30 Ea.	22
	Use for split rail and stockade fence. Round post latch made of 3/8" rod; 7" wide x 8½" long, for fence posts up to 7" in width.						
Colonial Round Rail Loop Latch • See Below	263X	132.02	------	Zinc	P/B w/scr.	30 Ea.	23
	Use for round rail and stockade fence. Latch made of 3/8" rod; 5" x 9-3/4" inside dimension.						
Colonial Screw Hook & Eye Hinge 1/2" X 4" 5/8" X 5"	161X	269.84	1/2" X 4"	Zinc	P/B	30 Pr.	33
	169X	455.81	5/8" X 5"	Zinc	P/B	30 Pr.	62
	For round post or split rail gates. Pair consists of four pieces: 2 screw eyes and 2 screw hooks.						

COMPONENTS

ITEM DESCRIPTION	PART NUMBER	PRICE BOX	SIZE	FINISH	PACKAGE	BOX QTY	BOX WT
Heavy Duty Straps (1¼" Wide x 3/16" Thick)	536X	276.60	8"	See Note	Bulk w/o scr.	60 Ea.	41
	537X	184.45	10"	See Note	Bulk w/o scr.	40 Ea.	32
	5/8" φ barrel. 8" strap has 2 holes, 10" strap has 3 holes. NOTE: Zinc finish; Black is available but special order is required.						
Screw Hooks	512X (N/S)	204.35	5/8"x5"x1¼"	Zinc	Bulk	60 Ea.	33
Plate Pintels	526X	245.95	5/8"φ x1¼"	Zinc	Bulk w/o scr.	40 Ea.	22
	Plate is 1½" x 4".						
Cables & Rings	580X (N/S)	358.81	- - - -	- - - -	Bulk	100 Ea.	7

FASTENERS

Item	Part Number	Price Each	Size	Finish	Package	Package Quantity	Package Weight
Hex Head Lag Screws	351 (N/S)	.26	5/16" x 2" Lag	Black	Bulk	2000	80
	352 (N/S)	.19	5/16" x 1½" Lag	Black	Bulk	2315	75
	353 (N/S)	.15	¼" x 1¼" Lag	Black	Bulk	2700	60
	354 (N/S)	.36	5/16" x 3" Lag	Black	Bulk	1500	75
Carriage Bolts w/Flange Nuts	355 (N/S)	.50	5/16" x 3" Car.	Black	Bulk	1000	67
	356 (N/S)	.88	5/16" x 6½" Car.	Black	Bulk	500	63

www.ameristarfence.com
1-888-333-3422
FAX: 1-877-926-3747

ITEM DESCRIPTION	PART NUMBER	PRICE BOX	SIZE	FINISH	PACKAGE	BOX QTY	BOX WT
Gate Spring	331X	423.17	14"	Black	P/B w/scr.	30 Ea.	39
Gate Sag Prevention Kit	337X	307.43	Std.	Zinc	P/B w/scr.	30 Ea.	20
Steel Post Adapter	SPA-3X	172.60	2-3/8"	Galv.	Bulk	50 Ea.	31

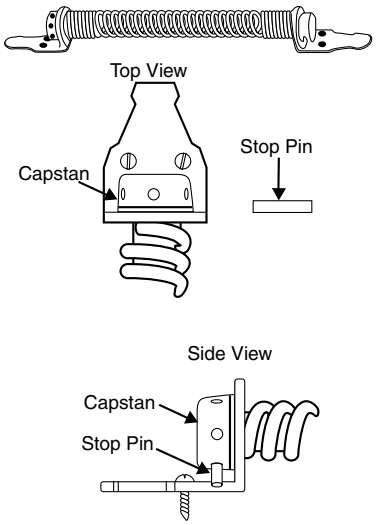

Adjustable gate or door spring. Extra heavy-duty spring for strength when needed.

Gate spring must be applied in oblique position as shown, adjustable capstan to the top and always to the left as you face the gate. Gate spring must be applied on the same side as the gate hinges. To increase tension, apply wrench pin to top capstan and turn counter-clockwise. When desired tension is obtained, insert stop pin into capstan as shown.

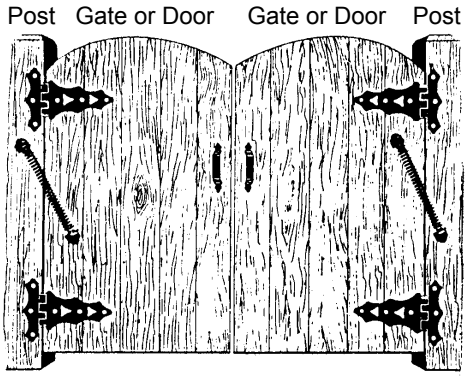

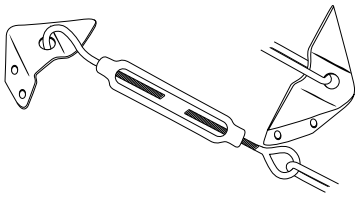

Prevents sagging on new gates or will raise old existing gate. Kit will work on gate panels up to 6' in height x 5' in width. Kit includes cable, brackets, tightener and screws. Good sales feature because it enables the customer to make later adjustments simply by tightening the turnbuckle.

Preventing Gate Sag
Use gate sag kit *(Note: Kit should be positioned from mid height on the latch side to the top back rail on the hinge side; mounting from the bottom of the latch side should be avoided since it could cause the gate to bow.)*

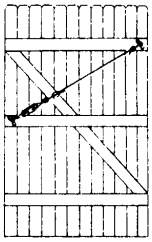

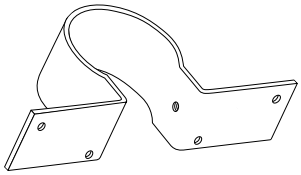

Extra heavy-duty. One-piece body with single tensioning bolt makes installation simple.

WOOD GATE HARDWARE
ACCESSORIES

www.ameristarfence.com
1-888-333-3422
FAX: 1-877-926-3747

ITEM DESCRIPTION	PART NUMBER	PRICE BOX	SIZE	FINISH	PACKAGE	BOX QTY	BOX WT
Cane Bolt Sets 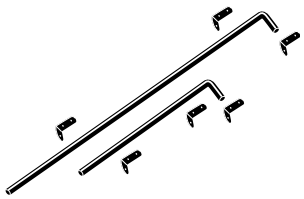	313-BX	95.54	18"	Black	Bulk w/scr.	10 Ea.	24
	315-BX	113.93	24"	Black	Bulk w/scr.	10 Ea.	29
	316-BX	148.74	48"	Black	Bulk w/scr.	10 Ea.	50
	317-BX	128.26	30"	Black	Bulk w/scr.	10 Ea.	34
	For use on double gates and garage doors. Heavy duty 5/8" solid bar, 3 guides and hanger brackets. Comes with screws. 18" - 24" available in zinc (must specify).						
Handle	321-BX	355.94	6"	Black	Bulk w/scr.	200 Ea.	42
	322-BX	355.94	6"	Black	Bulk w/o scr.	200 Ea.	32
	Regular Handle: 6" length. Used in conjunction with Post Latch.						
Handle	324-SX (N/S)	293.98	9"	Black	Bulk w/scr.	100 Ea.	28
	Maxima Support Handle. Gives extra strength to striker bar.						
Ornamental Handle	326X (N/S)	585.04	8"	Black	Bulk w/scr.	200 Ea.	65
	Ornamental Handle: 8" length. Used in conjunction with Thumb Latch.						

QUIK-ROK®
CEMENT/GROUT

www.ameristarfence.com
1-888-333-3422
FAX: 1-877-926-3747

Fast Setting Cement Grout

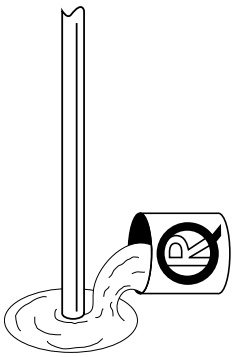

ITEM NUMBER	PRICE EACH	PACKAGE	PALLET QUANTITY	WEIGHT
1002	**38.54 ****	**Plastic Pail**	**36**	**54.5 Lb.**

DESCRIPTION

QUIK-ROK® is a chemically engineered hydraulic cement which when mixed with water forms a pourable mix whose self-leveling characteristics make it an ideal grouting material. Controlled expansion enables QUIK-ROK® to develop "lock-in" adhesion which can withstand loads in excess of 10,000 psi. It is designed to set within 15 minutes, under normal conditions.

NOTE: Instructions for Use on Pages 21-3 and 21-4. Read the "Caution" statements prior to use.

**** Price is net price F.O.B. Tulsa. Discount quantities available for half truckload and full truckload orders. Six (6) pallet orders are minimum for paid freight.**

WOOD GATE HARDWARE
SAMPLES

www.ameristarfence.com
1-888-333-3422
FAX: 1-877-926-3747

ITEM DESCRIPTION	PART NUMBER	SIZE	WT.
Gate Hardware Display Board 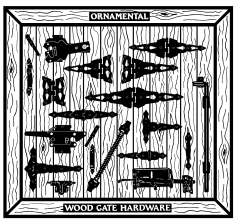	7302	32" x 35"	36
Maxima Post Latch & Strap Hinge 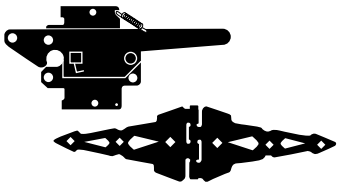	WGHS1	- - - -	4
Maxima Deluxe Latch & Strap Hinge 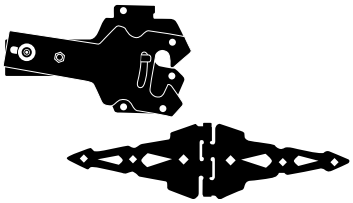	WGHS2	- - - -	4
Maxima Post Latch & Tee Hinge 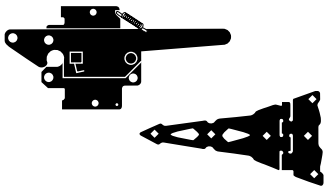	WGHS3	- - - -	4
Maxima Deluxe Latch & Tee Hinge 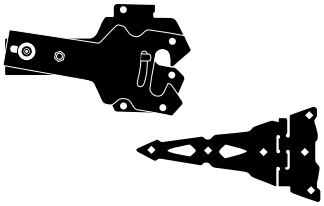	WGHS4	- - - -	4

WHY CHOOSE AMERISTAR?

KNOWLEDGE & EXPERIENCE

Ameristar was chartered 30 years ago in response to the demand by consumers and specifiers for specialty fence products. Ameristar offers an aesthetically pleasing product that is both high in quality and affordability. This has been achieved by maximizing high-volume productivity, increasing product design strength, and promoting simplistic installation.

PROVEN CAPABILITY

Ameristar's integrated in-house process and extensive raw material inventory results in much improved productivity and availability compared to the competition. By having a vast finished goods inventory, Ameristar is capable of delivering finished products faster than competitors who sublet the majority of their operations.

INDUSTRY LEADERSHIP

Over the years Ameristar has continually raised the bar across the board in the manufacturing of high quality, innovative fencing products. Our demonstrated commitment to upholding higher values translates into superior products that go far beyond merely meeting minimum industry standards.

Ameristar's world headquarters, manufacturing & coil processing facilities in Tulsa, Oklahoma, USA.

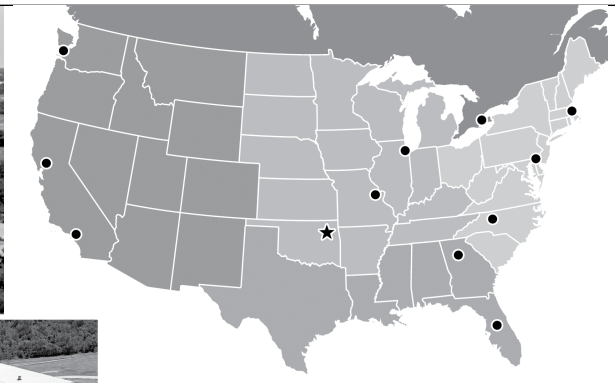

LEGEND
★ *Ameristar Headquarters*
● *Regional Distribution Centers*

Part #9742 | Revised 11/2012

www.ameristarfence.com | 888-333-3422
1555 N. Mingo Rd. | Tulsa, Oklahoma 74116

AMERISTAR® FENCE PRODUCTS